Hill International North Africa Ltd.
Plot 140, NCFC Building,
Banks Zone, 1st District,
Fifth Settlement, New Cairo,
Cairo, Egypt
Tel: +202 2322 0000
Fax: +202 2322 0022
www.hillintl.com

Date: May 16, 2024
Ref: PEG-1155-93M-CN-HI-BOA-LET-ES-10366

Jean Marc Decloquement
Consortium Director
Blocks 277-278,2nd business sector,
Teseen st, Shaker Consultancy Building
New Cairo, Egypt.

Project: Engineering, Procurement and Construction of the New Administrative Capital Monorail and 6th October City Monorail (Contract 93/Metro).

Subject: Non-conformities in Shop Drawings. // 93M-BOA-NAT-LOT-26031

References: -

1. Hill's Letter ref. PEG-1155-93M-CN-HI-BOA-LET-JB-0164
2. Hill's Letter no- PEG-1155-93M-CN-HI-BOA-LET-JB-0205
3. Contractor's Transmittal ref. 93M-BOA-NAT-LOT-26031

Dear Sir,

We note that the below shop drawings (in the Annexure) were uploaded on Aconex with status "closed". We note that there are some comments within the drawings needed to be addressed before commencing the site work.

The comments on the shop drawings as per attached annexure.

The Contractor is advised to correct the above into the shop drawings before any issuance to his site staff.

The Contractor is hereby further notified that in any such eventuality of rework, dismantling of constructed structure on account of such omission on the part of Contractor, it will be to Contractor's account and we re-iterate that any deviations from the approved drawings will triggers withholding from the upcoming payments pursuant to Sub-Clause 14.6 (b) of Conditions of Contract.

For and on behalf of
Hill International (Africa) Ltd

Navendu Lad
Acting Project Director
Attachments:

1. Non conformities table.
2. Stamped Drawings listed in the attached "Comments table".

Initial /reviewed by: ES
Reply Required: ( ) Yes (X) No
Cc: NAT

DELIVERING THE INFRASTRUCTURE OF CHANGE

93M-BOA-NAT-LOT-26031

S.No.	Drawing no	Non-conformity
1	93M-0476-ACC-60DEP-DWG-08001-B	- It is the contractor responsibility to ensure and revise all Dimensions and levels with the approved design drawings besides the coordination package before commencing any site Works. - Please clarify embedded length of anchors in shop drawing - welds in terms of (size , length & symbol) shall be provided -The Contractor shall add clouds, which show changes between this version and the previous one. -Connect all railing pipes to the post (L70*7) or provide calculations to ensure the safety of this cantilever. Snap taken from the IFC model -Bracing should be added as shown in design reference. 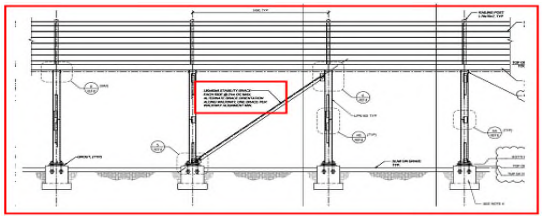
2	93M-0476-ACC-60DEP-DWG-08002-B	According to drawings no.93M-0476-INN-6ODEP-PAL-10009 to 93M-0476-INN-6ODEP-PAL-10011 for the planning of the foundations of zone01,There is a shift between the planning reference and the shop drawings as shown in the taken snaps below.

		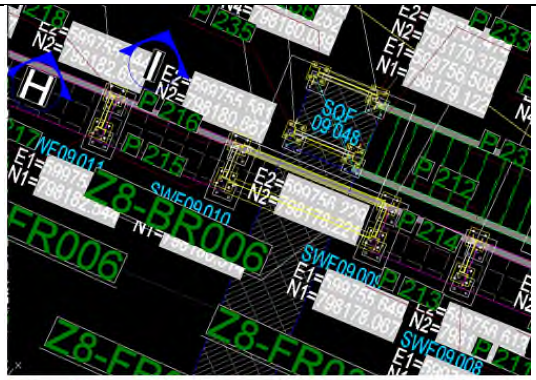 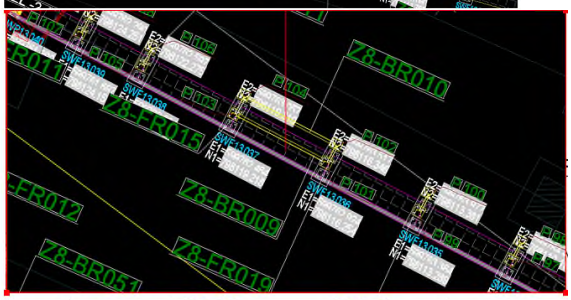 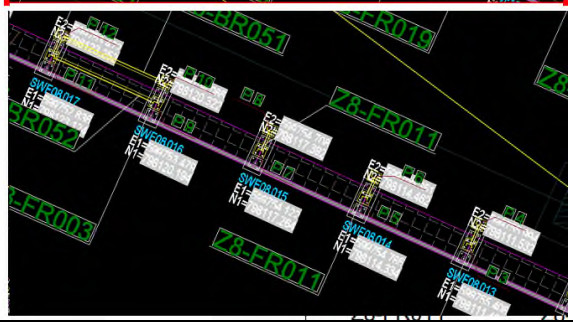
3	93M-0476-ACC-60DEP-DWG-08003-B	Same comment as 93M-0476-ACC-6ODEP-DWG-08002-B.
4	93M-0476-ACC-60DEP-DWG-08004-B	Same comment as 93M-0476-ACC-6ODEP-DWG-08002-B.

5	93M-0476-ACC-60DEP-DWG-08005-B	Same comment as 93M-0476-ACC-6ODEP-DWG-08002-B.
6	93M-0476-ACC-60DEP-DWG-08006-B	Same comment as 93M-0476-ACC-6ODEP-DWG-08002-B.

7	93M-0476-ACC-60DEP-DWG-08007-B	-Connection is not matching with design drawings as shown below. 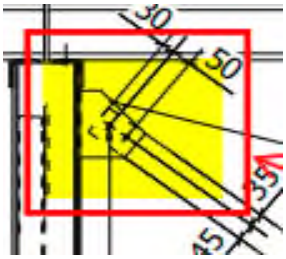 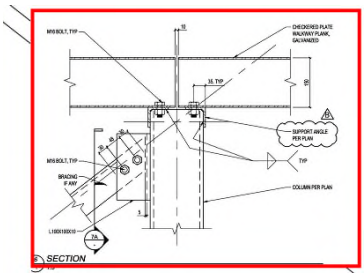 -Handrail is not matching with the design reference as shown below. 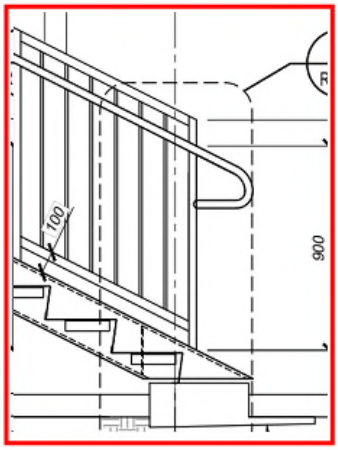

		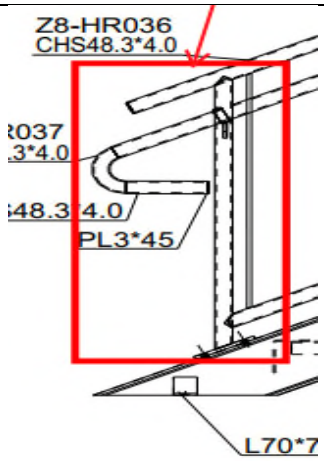
8	93M-0476-ACC-60DEP-DWG-08008-B	-All handrail-ending details are not matching with the design reference as shown below. 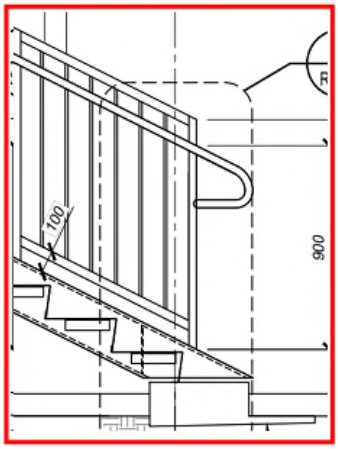 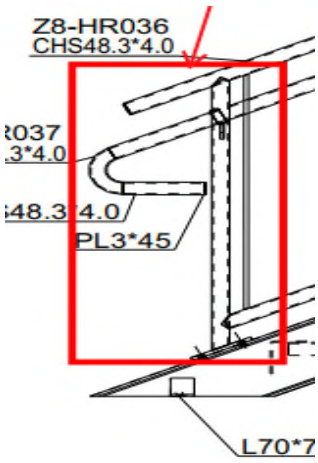 -Highlighted connections are not matching with the

		design drawings a shown so please send a calculation note for the used connections. 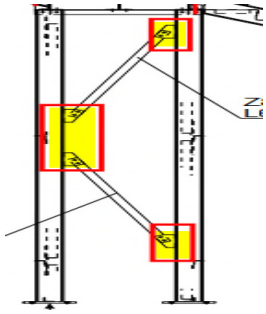 -Guardrail endings are not matching with the design drawings. 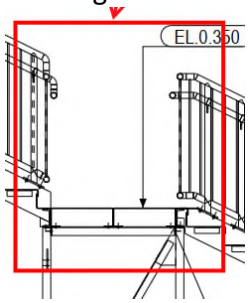
9	93M-0476-ACC-60DEP-DWG-08009-B	-Same comments as 93M-0476-ACC-60DEP-DWG-08008-B. -The ladder details are not matching with the design drawings as shown in the design snap and IFC model snap. 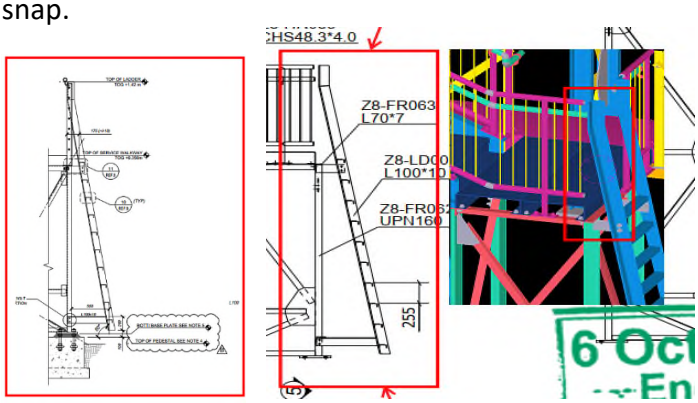
10	93M-0476-ACC-60DEP-DWG-08010-B	Same comments as 93M-0476-ACC-60DEP-DWG-08008-B.
11	93M-0476-ACC-60DEP-DWG-08011-B	-Highlighted connections are not matching with the design drawings a shown so please send a calculation

		note for the used connections. 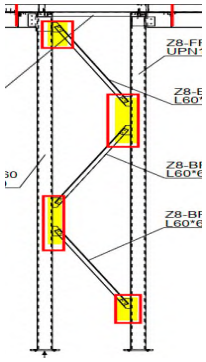
12	93M-0476-ACC-60DEP-DWG-08012-B	-Check that the end plate of the guardrail bolted to the beam should be completely rested on the beam as shown in the design reference. 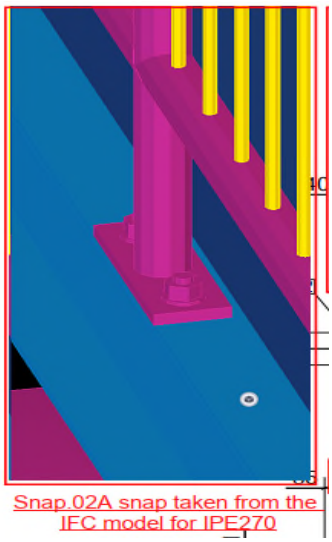 Snap 02A snap taken from the IFC model for IPE270 -Dimensions are not matching with the design drawings as shown below ,however accepted 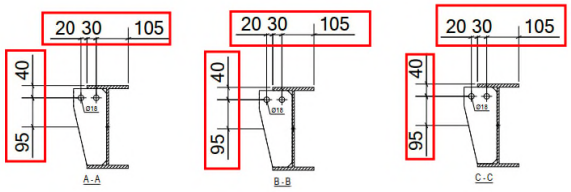

		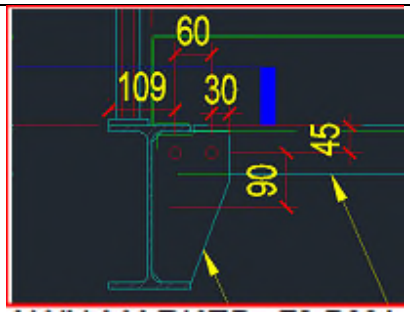 -Bolt's fixation is not matching with design reference as shown in snap no.1,however accepted 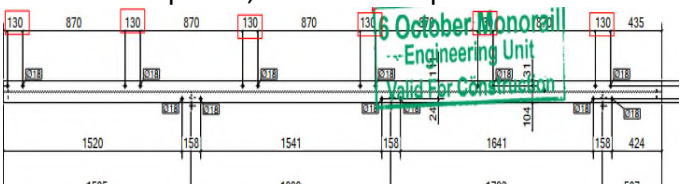
13	93M-0476-ACC-60DEP-DWG-08013-B	Same comments as 93M-0476-ACC-60DEP-DWG-08012-B.
14	93M-0476-ACC-60DEP-DWG-08014-B	Same comments as 93M-0476-ACC-60DEP-DWG-08012-B.
15	93M-0476-ACC-60DEP-DWG-08015-B	Same comments as 93M-0476-ACC-60DEP-DWG-08012-B.
16	93M-0476-ACC-60DEP-DWG-08016-B	-Same comments as 93M-0476-ACC-60DEP-DWG-08012-B. -Please check the orientation of the beam. 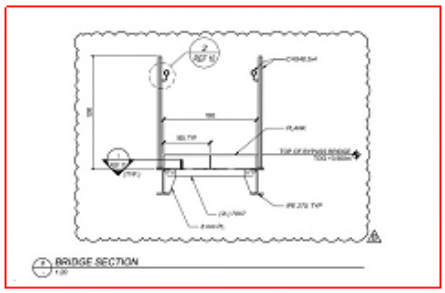 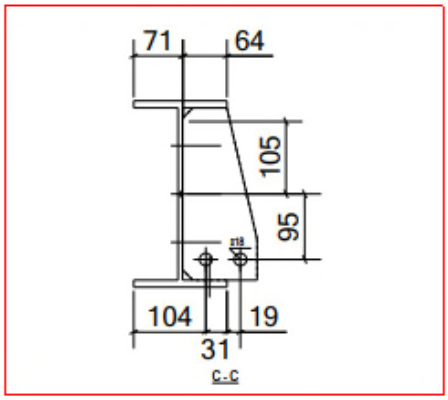

		-Please check bolt parts 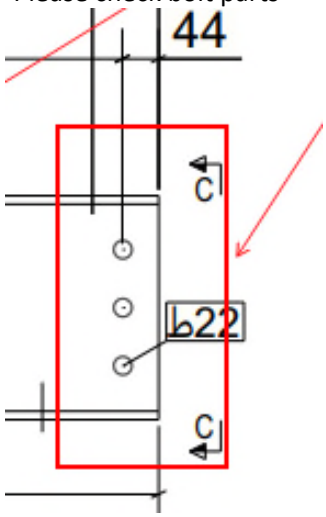
17	93M-0476-ACC-60DEP-DWG-08017-B	-Same comments as 93M-0476-ACC-60DEP-DWG-08012-B. -Please check the orientation of the beam. 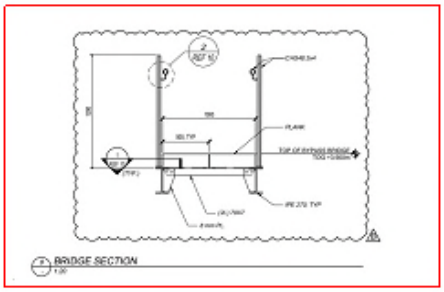 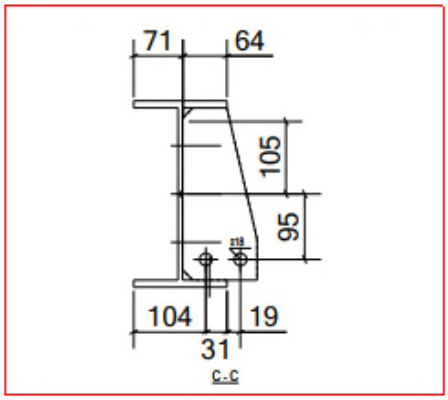 -Please check bolt parts

		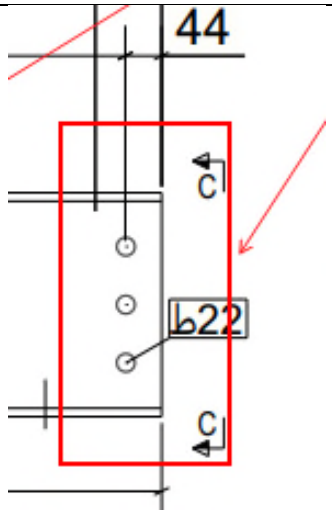
18	93M-0476-ACC-60DEP-DWG-08018-B	1-Check that the end plate bolted to the beam should be completely rested on the beam. 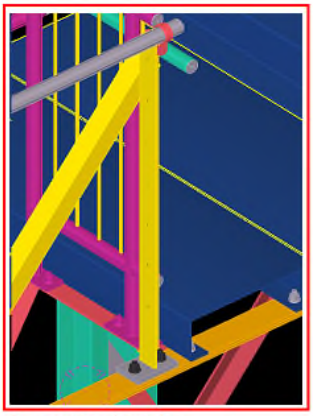 Snap taken from the IFC model for L100*10
19	93M-0476-BCC-60DEP-DWG-08019-B	Same comments as 93M-0476-ACC-60DEP-DWG-08018-B.
20	93M-0476-BCC-60DEP-DWG-08020-B	Same comments as 93M-0476-ACC-60DEP-DWG-08018-B.
21	93M-0476-BCC-60DEP-DWG-08021-B	Approval is subject to approval of coordination package between multi-discipline.
22	93M-0476-BCC-60DEP-DWG-08022-B	Approval is subject to approval of coordination package between multi-discipline.
23	93M-0476-BCC-60DEP-DWG-08023-B	Approval is subject to approval of coordination package between multi-discipline.
24	93M-0476-BCC-60DEP-DWG-08024-B	Approval is subject to approval of coordination package between multi-discipline.

25	93M-0476-BCC-60DEP-DWG-08025-B	Approval is subject to approval of coordination package between multi-discipline.
26	93M-0476-BCC-60DEP-DWG-08026-B	Approval is subject to approval of coordination package between multi-discipline.
27	93M-0476-BCC-60DEP-DWG-08027-B	Approval is subject to approval of coordination package between multi-discipline.
28	93M-0476-BCC-60DEP-DWG-08028-B	Approval is subject to approval of coordination package between multi-discipline.
29	93M-0476-BCC-60DEP-DWG-08029-B	Approval is subject to approval of coordination package between multi-discipline.
30	93M-0476-BCC-60DEP-DWG-08030-B	Approval is subject to approval of coordination package between multi-discipline.
31	93M-0476-BCC-60DEP-DWG-08031-B	Approval is subject to approval of coordination package between multi-discipline.
32	93M-0476-BCC-60DEP-DWG-08032-B	Approval is subject to approval of coordination package between multi-discipline.
33	93M-0476-BCC-60DEP-DWG-08033-B	Approval is subject to approval of coordination package between multi-discipline.
34	93M-0476-BCC-60DEP-DWG-08034-B	Approval is subject to approval of coordination package between multi-discipline.
35	93M-0476-BCC-60DEP-DWG-08035-B	Approval is subject to approval of coordination package between multi-discipline.
36	93M-0476-BCC-60DEP-DWG-08036-B	Approval is subject to approval of coordination package between multi-discipline.
37	93M-0476-BCC-60DEP-DWG-08037-B	Approval is subject to approval of coordination package between multi-discipline.
38	93M-0476-BCC-60DEP-DWG-08038-B	Approval is subject to approval of coordination package between multi-discipline.
39	93M-0476-BCC-60DEP-DWG-08039-B	Approval is subject to approval of coordination package between multi-discipline.
40	93M-0476-BCC-60DEP-DWG-08040-B	Approval is subject to approval of coordination package between multi-discipline.
41	93M-0476-BCC-60DEP-DWG-08041-B	Approval is subject to approval of coordination package between multi-discipline.
42	93M-0476-BCC-60DEP-DWG-08042-B	Approval is subject to approval of coordination package between multi-discipline.
43	93M-0476-BCC-60DEP-DWG-08043-B	Approval is subject to approval of coordination package between multi-discipline.
44	93M-0476-BCC-60DEP-DWG-08044-B	Approval is subject to approval of coordination package between multi-discipline.
45	93M-0476-BCC-60DEP-DWG-08045-B	Approval is subject to approval of coordination package between multi-discipline.
46	93M-0476-BCC-60DEP-DWG-08046-B	Approval is subject to approval of coordination package between multi-discipline.

47	93M-0476-BCC-60DEP-DWG-08047-B	Approval is subject to approval of coordination package between multi-discipline.
48	93M-0476-BCC-60DEP-DWG-08048-B	Approval is subject to approval of coordination package between multi-discipline.
49	93M-0476-BCC-60DEP-DWG-08049-B	Approval is subject to approval of coordination package between multi-discipline.
50	93M-0476-BCC-60DEP-DWG-08050-B	Approval is subject to approval of coordination package between multi-discipline.
51	93M-0476-BCC-60DEP-DWG-08051-B	Approval is subject to approval of coordination package between multi-discipline.
52	93M-0476-BCC-60DEP-DWG-08052-B	Approval is subject to approval of coordination package between multi-discipline.
53	93M-0476-BCC-60DEP-DWG-08053-B	Approval is subject to approval of coordination package between multi-discipline.
54	93M-0476-BCC-60DEP-DWG-08054-B	Approval is subject to approval of coordination package between multi-discipline.
55	93M-0476-BCC-60DEP-DWG-08055-B	Approval is subject to approval of coordination package between multi-discipline.
56	93M-0476-BCC-60DEP-DWG-08056-B	Approval is subject to approval of coordination package between multi-discipline.
57	93M-0476-BCC-60DEP-DWG-08057-B	Approval is subject to approval of coordination package between multi-discipline.
58	93M-0476-BCC-60DEP-DWG-08058-B	Approval is subject to approval of coordination package between multi-discipline.
59	93M-0476-BCC-60DEP-DWG-08059-B	Approval is subject to approval of coordination package between multi-discipline.
60	93M-0476-BCC-60DEP-DWG-08060-B	Approval is subject to approval of coordination package between multi-discipline.
61	93M-0476-BCC-60DEP-DWG-08061-B	Approval is subject to approval of coordination package between multi-discipline.
62	93M-0476-BCC-60DEP-DWG-08062-B	Approval is subject to approval of coordination package between multi-discipline.
63	93M-0476-BCC-60DEP-DWG-08063-B	Approval is subject to approval of coordination package between multi-discipline.
64	93M-0476-BCC-60DEP-DWG-08064-B	Approval is subject to approval of coordination package between multi-discipline.
65	93M-0476-BCC-60DEP-DWG-08065-B	Approval is subject to approval of coordination package between multi-discipline.
66	93M-0476-BCC-60DEP-DWG-08066-B	Approval is subject to approval of coordination package between multi-discipline.
67	93M-0476-BCC-60DEP-DWG-08067-B	Approval is subject to approval of coordination package between multi-discipline.
68	93M-0476-BCC-60DEP-DWG-08068-B	Approval is subject to approval of coordination package between multi-discipline.

69	93M-0476-BCC-60DEP-DWG-08069-B	Approval is subject to approval of coordination package between multi-discipline.
70	93M-0476-BCC-60DEP-DWG-08070-B	Approval is subject to approval of coordination package between multi-discipline.
71	93M-0476-BCC-60DEP-DWG-08071-B	Approval is subject to approval of coordination package between multi-discipline.
72	93M-0476-BCC-60DEP-DWG-08072-B	Approval is subject to approval of coordination package between multi-discipline.
73	93M-0476-BCC-60DEP-DWG-08073-B	Approval is subject to approval of coordination package between multi-discipline.
74	93M-0476-BCC-60DEP-DWG-08074-B	Approval is subject to approval of coordination package between multi-discipline.
75	93M-0476-BCC-60DEP-DWG-08075-B	Approval is subject to approval of coordination package between multi-discipline.
76	93M-0476-BCC-60DEP-DWG-08076-B	Approval is subject to approval of coordination package between multi-discipline.
77	93M-0476-BCC-60DEP-DWG-08077-B	Approval is subject to approval of coordination package between multi-discipline.
78	93M-0476-BCC-60DEP-DWG-08078-B	Approval is subject to approval of coordination package between multi-discipline.
79	93M-0476-BCC-60DEP-DWG-08079-B	The slot should be short slot a shown in the design reference which is (18*22) according to ANSI/AISC 360-05. 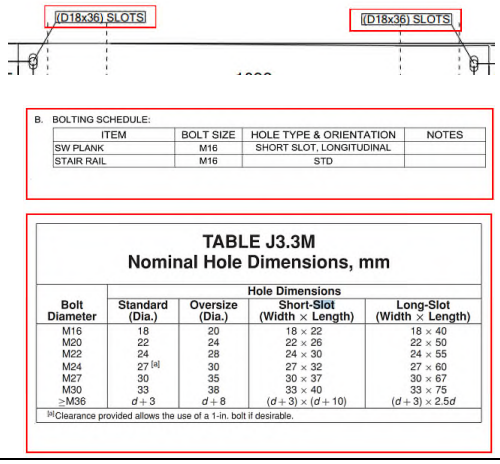
80	93M-0476-BCC-60DEP-DWG-08080-B	Same comments as 93M-0476-ACC-60DEP-DWG-08079-B.
81	93M-0476-BCC-60DEP-DWG-08081-B	Same comments as 93M-0476-ACC-60DEP-DWG-08079-B.
82	93M-0476-BCC-60DEP-DWG-08082-B	Same comments as 93M-0476-ACC-60DEP-DWG-08079-B.
83	93M-0476-BCC-60DEP-DWG-08083-B	Same comments as 93M-0476-ACC-60DEP-DWG-08079-B.

84	93M-0476-BCC-60DEP-DWG-08084-B	Same comments as 93M-0476-ACC-60DEP-DWG-08079-B.
85	93M-0476-BCC-60DEP-DWG-08085-B	Same comments as 93M-0476-ACC-60DEP-DWG-08079-B.
86	93M-0476-BCC-60DEP-DWG-08086-B	Same comments as 93M-0476-ACC-60DEP-DWG-08079-B.
87	93M-0476-BCC-60DEP-DWG-08087-B	Same comments as 93M-0476-ACC-60DEP-DWG-08079-B.
88	93M-0476-BCC-60DEP-DWG-08088-B	Same comments as 93M-0476-ACC-60DEP-DWG-08079-B.
89	93M-0476-BCC-60DEP-DWG-08089-B	Same comments as 93M-0476-ACC-60DEP-DWG-08079-B.
90	93M-0476-BCC-60DEP-DWG-08090-B	Same comments as 93M-0476-ACC-60DEP-DWG-08079-B.
91	93M-0476-BCC-60DEP-DWG-08091-B	Same comments as 93M-0476-ACC-60DEP-DWG-08079-B.
92	93M-0476-BCC-60DEP-DWG-08092-B	Same comments as 93M-0476-ACC-60DEP-DWG-08079-B.
93	93M-0476-BCC-60DEP-DWG-08093-B	Same comments as 93M-0476-ACC-60DEP-DWG-08079-B.
94	93M-0476-BCC-60DEP-DWG-08094-B	Same comments as 93M-0476-ACC-60DEP-DWG-08079-B.
95	93M-0476-BCC-60DEP-DWG-08095-B	Same comments as 93M-0476-ACC-60DEP-DWG-08079-B.
96	93M-0476-BCC-60DEP-DWG-08096-B	Same comments as 93M-0476-ACC-60DEP-DWG-08079-B.
97	93M-0476-BCC-60DEP-DWG-08097-B	Same comments as 93M-0476-ACC-60DEP-DWG-08079-B.
98	93M-0476-BCC-60DEP-DWG-08098-B	Same comments as 93M-0476-ACC-60DEP-DWG-08079-B.
99	93M-0476-BCC-60DEP-DWG-08099-B	Same comments as 93M-0476-ACC-60DEP-DWG-08079-B.
100	93M-0476-BCC-60DEP-DWG-08100-B	Same comments as 93M-0476-ACC-60DEP-DWG-08079-B.
101	93M-0476-BCC-60DEP-DWG-08101-B	Same comments as 93M-0476-ACC-60DEP-DWG-08079-B.
102	93M-0476-BCC-60DEP-DWG-08102-B	Same comments as 93M-0476-ACC-60DEP-DWG-08079-B.
103	93M-0476-BCC-60DEP-DWG-08103-B	Same comments as 93M-0476-ACC-60DEP-DWG-08079-B.
104	93M-0476-BCC-60DEP-DWG-08104-B	Same comments as 93M-0476-ACC-60DEP-DWG-08079-B.
105	93M-0476-BCC-60DEP-DWG-08105-B	Same comments as 93M-0476-ACC-60DEP-DWG-08079-B.

106	93M-0476-BCC-60DEP-DWG-08106-B	Same comments as 93M-0476-ACC-60DEP-DWG-08079-B.
107	93M-0476-BCC-60DEP-DWG-08107-B	Same comments as 93M-0476-ACC-60DEP-DWG-08079-B.
108	93M-0476-BCC-60DEP-DWG-08108-B	Same comments as 93M-0476-ACC-60DEP-DWG-08079-B.
109	93M-0476-BCC-60DEP-DWG-08109-B	Same comments as 93M-0476-ACC-60DEP-DWG-08079-B.
110	93M-0476-BCC-60DEP-DWG-08110-B	Same comments as 93M-0476-ACC-60DEP-DWG-08079-B.
111	93M-0476-BCC-60DEP-DWG-08111-B	Same comments as 93M-0476-ACC-60DEP-DWG-08079-B.
112	93M-0476-BCC-60DEP-DWG-08112-B	Same comments as 93M-0476-ACC-60DEP-DWG-08079-B.
113	93M-0476-BCC-60DEP-DWG-08113-B	Same comments as 93M-0476-ACC-60DEP-DWG-08079-B.
114	93M-0476-BCC-60DEP-DWG-08114-B	Same comments as 93M-0476-ACC-60DEP-DWG-08079-B.
115	93M-0476-BCC-60DEP-DWG-08115-B	Same comments as 93M-0476-ACC-60DEP-DWG-08079-B.
116	93M-0476-BCC-60DEP-DWG-08116-B	Same comments as 93M-0476-ACC-60DEP-DWG-08079-B.
117	93M-0476-BCC-60DEP-DWG-08117-B	Same comments as 93M-0476-ACC-60DEP-DWG-08079-B.
118	93M-0476-BCC-60DEP-DWG-08118-B	Same comments as 93M-0476-ACC-60DEP-DWG-08079-B.
119	93M-0476-BCC-60DEP-DWG-08119-B	Same comments as 93M-0476-ACC-60DEP-DWG-08079-B.
120	93M-0476-BCC-60DEP-DWG-08120-B	Same comments as 93M-0476-ACC-60DEP-DWG-08079-B.
121	93M-0476-BCC-60DEP-DWG-08121-B	Same comments as 93M-0476-ACC-60DEP-DWG-08079-B.
122	93M-0476-BCC-60DEP-DWG-08122-B	Same comments as 93M-0476-ACC-60DEP-DWG-08079-B.
123	93M-0476-BCC-60DEP-DWG-08123-B	Same comments as 93M-0476-ACC-60DEP-DWG-08079-B.
124	93M-0476-BCC-60DEP-DWG-08124-B	Same comments as 93M-0476-ACC-60DEP-DWG-08079-B.
125	93M-0476-BCC-60DEP-DWG-08125-B	Same comments as 93M-0476-ACC-60DEP-DWG-08079-B.
126	93M-0476-BCC-60DEP-DWG-08126-B	Same comments as 93M-0476-ACC-60DEP-DWG-08079-B.
127	93M-0476-BCC-60DEP-DWG-08127-B	Same comments as 93M-0476-ACC-60DEP-DWG-08079-B.

128	93M-0476-BCC-60DEP-DWG-08128-B	Same comments as 93M-0476-ACC-60DEP-DWG-08079-B.
129	93M-0476-BCC-60DEP-DWG-08129-B	Same comments as 93M-0476-ACC-60DEP-DWG-08079-B.
130	93M-0476-BCC-60DEP-DWG-08130-B	Same comments as 93M-0476-ACC-60DEP-DWG-08079-B.
131	93M-0476-BCC-60DEP-DWG-08131-B	Same comments as 93M-0476-ACC-60DEP-DWG-08079-B.
132	93M-0476-BCC-60DEP-DWG-08132-B	Same comments as 93M-0476-ACC-60DEP-DWG-08079-B.
133	93M-0476-BCC-60DEP-DWG-08133-B	Same comments as 93M-0476-ACC-60DEP-DWG-08079-B.
134	93M-0476-BCC-60DEP-DWG-08134-B	Same comments as 93M-0476-ACC-60DEP-DWG-08079-B.
135	93M-0476-BCC-60DEP-DWG-08135-B	Same comments as 93M-0476-ACC-60DEP-DWG-08079-B.
136	93M-0476-BCC-60DEP-DWG-08136-B	Same comments as 93M-0476-ACC-60DEP-DWG-08079-B.
137	93M-0476-BCC-60DEP-DWG-08137-B	Same comments as 93M-0476-ACC-60DEP-DWG-08079-B.
138	93M-0476-BCC-60DEP-DWG-08138-B	Same comments as 93M-0476-ACC-60DEP-DWG-08079-B.
139	93M-0476-BCC-60DEP-DWG-08139-B	Same comments as 93M-0476-ACC-60DEP-DWG-08079-B.
140	93M-0476-BCC-60DEP-DWG-08140-B	Same comments as 93M-0476-ACC-60DEP-DWG-08079-B.
141	93M-0476-BCC-60DEP-DWG-08141-B	Same comments as 93M-0476-ACC-60DEP-DWG-08079-B.
142	93M-0476-BCC-60DEP-DWG-08142-B	Same comments as 93M-0476-ACC-60DEP-DWG-08079-B.
143	93M-0476-BCC-60DEP-DWG-08143-B	Same comments as 93M-0476-ACC-60DEP-DWG-08079-B.
144	93M-0476-BCC-60DEP-DWG-08144-B	Same comments as 93M-0476-ACC-60DEP-DWG-08079-B.
145	93M-0476-BCC-60DEP-DWG-08145-B	Same comments as 93M-0476-ACC-60DEP-DWG-08079-B.
146	93M-0476-BCC-60DEP-DWG-08146-B	Same comments as 93M-0476-ACC-60DEP-DWG-08079-B.
147	93M-0476-BCC-60DEP-DWG-08147-B	Same comments as 93M-0476-ACC-60DEP-DWG-08079-B.
148	93M-0476-BCC-60DEP-DWG-08148-B	Same comments as 93M-0476-ACC-60DEP-DWG-08079-B.
149	93M-0476-BCC-60DEP-DWG-08149-B	Same comments as 93M-0476-ACC-60DEP-DWG-08079-B.

150	93M-0476-BCC-60DEP-DWG-08150-B	Same comments as 93M-0476-ACC-60DEP-DWG-08079-B.
151	93M-0476-BCC-60DEP-DWG-08151-B	Same comments as 93M-0476-ACC-60DEP-DWG-08079-B.
152	93M-0476-BCC-60DEP-DWG-08152-B	Same comments as 93M-0476-ACC-60DEP-DWG-08079-B.
153	93M-0476-BCC-60DEP-DWG-08153-B	Same comments as 93M-0476-ACC-60DEP-DWG-08079-B.
154	93M-0476-BCC-60DEP-DWG-08154-B	Same comments as 93M-0476-ACC-60DEP-DWG-08079-B.
155	93M-0476-BCC-60DEP-DWG-08155-B	Same comments as 93M-0476-ACC-60DEP-DWG-08079-B.
156	93M-0476-BCC-60DEP-DWG-08156-B	Same comments as 93M-0476-ACC-60DEP-DWG-08079-B.
157	93M-0476-BCC-60DEP-DWG-08157-B	Same comments as 93M-0476-ACC-60DEP-DWG-08079-B.
158	93M-0476-BCC-60DEP-DWG-08158-B	Same comments as 93M-0476-ACC-60DEP-DWG-08079-B.
159	93M-0476-BCC-60DEP-DWG-08159-B	Same comments as 93M-0476-ACC-60DEP-DWG-08079-B.
160	93M-0476-BCC-60DEP-DWG-08160-B	Same comments as 93M-0476-ACC-60DEP-DWG-08079-B.
161	93M-0476-BCC-60DEP-DWG-08161-B	Same comments as 93M-0476-ACC-60DEP-DWG-08079-B.
162	93M-0476-BCC-60DEP-DWG-08162-B	Same comments as 93M-0476-ACC-60DEP-DWG-08079-B.
163	93M-0476-BCC-60DEP-DWG-08163-B	Same comments as 93M-0476-ACC-60DEP-DWG-08079-B.
164	93M-0476-BCC-60DEP-DWG-08164-B	Same comments as 93M-0476-ACC-60DEP-DWG-08079-B.
165	93M-0476-BCC-60DEP-DWG-08165-B	Same comments as 93M-0476-ACC-60DEP-DWG-08079-B.
166	93M-0476-BCC-60DEP-DWG-08166-B	Same comments as 93M-0476-ACC-60DEP-DWG-08079-B.
167	93M-0476-BCC-60DEP-DWG-08167-B	Same comments as 93M-0476-ACC-60DEP-DWG-08079-B.
168	93M-0476-BCC-60DEP-DWG-08168-B	Same comments as 93M-0476-ACC-60DEP-DWG-08079-B.
169	93M-0476-BCC-60DEP-DWG-08169-B	Same comments as 93M-0476-ACC-60DEP-DWG-08079-B.
170	93M-0476-BCC-60DEP-DWG-08170-B	Same comments as 93M-0476-ACC-60DEP-DWG-08079-B.
171	93M-0476-BCC-60DEP-DWG-08171-B	Same comments as 93M-0476-ACC-60DEP-DWG-08079-B.

172	93M-0476-BCC-60DEP-DWG-08172-B	Same comments as 93M-0476-ACC-60DEP-DWG-08079-B.
173	93M-0476-BCC-60DEP-DWG-08173-B	Same comments as 93M-0476-ACC-60DEP-DWG-08079-B.
174	93M-0476-BCC-60DEP-DWG-08174-B	Same comments as 93M-0476-ACC-60DEP-DWG-08079-B.
175	93M-0476-BCC-60DEP-DWG-08175-B	Same comments as 93M-0476-ACC-60DEP-DWG-08079-B.
176	93M-0476-BCC-60DEP-DWG-08176-B	Same comments as 93M-0476-ACC-60DEP-DWG-08079-B.
177	93M-0476-BCC-60DEP-DWG-08177-B	Same comments as 93M-0476-ACC-60DEP-DWG-08079-B.
178	93M-0476-BCC-60DEP-DWG-08178-B	Same comments as 93M-0476-ACC-60DEP-DWG-08079-B.
179	93M-0476-BCC-60DEP-DWG-08179-B	Same comments as 93M-0476-ACC-60DEP-DWG-08079-B.
180	93M-0476-BCC-60DEP-DWG-08180-B	-These connections are not matching with the design drawings, Please provide us the calculation notes For mentioned connections. 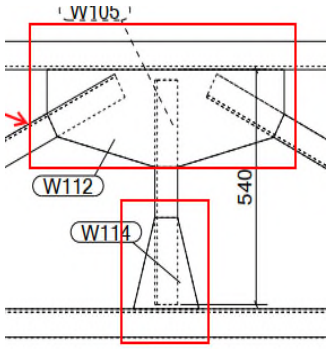 2-These distances are not matching with design drawings as shown below. 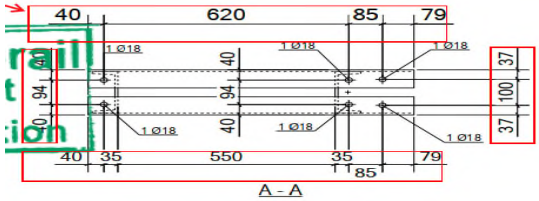 3-Should be 103mm as shown in design drawings.

		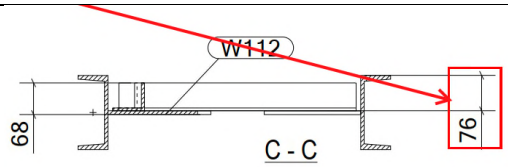 4-These plates should be L100*10 as shown in design drawings.
181	93M-0476-BCC-60DEP-DWG-08181-B	Same comments as 93M-0476-ACC-60DEP-DWG-08180-B.
182	93M-0476-BCC-60DEP-DWG-08182-B	Same comments as 93M-0476-ACC-60DEP-DWG-08180-B.
183	93M-0476-BCC-60DEP-DWG-08183-B	Same comments as 93M-0476-ACC-60DEP-DWG-08180-B.
184	93M-0476-BCC-60DEP-DWG-08184-B	Same comments as 93M-0476-ACC-60DEP-DWG-08180-B.
185	93M-0476-BCC-60DEP-DWG-08185-B	- Same comments as 93M-0476-ACC-60DEP-DWG-08180-B.
186	93M-0476-BCC-60DEP-DWG-08186-B	Same comments as 93M-0476-ACC-60DEP-DWG-08180-B.
187	93M-0476-BCC-60DEP-DWG-08187-B	Same comments as 93M-0476-ACC-60DEP-DWG-08180-B.
188	93M-0476-BCC-60DEP-DWG-08188-B	Same comments as 93M-0476-ACC-60DEP-DWG-08180-B.
189	93M-0476-BCC-60DEP-DWG-08189-B	Same comments as 93M-0476-ACC-60DEP-DWG-08180-B.
190	93M-0476-BCC-60DEP-DWG-08190-B	Same comments as 93M-0476-ACC-60DEP-DWG-08180-B.
191	93M-0476-BCC-60DEP-DWG-08191-B	Same comments as 93M-0476-ACC-60DEP-DWG-08180-B.
192	93M-0476-BCC-60DEP-DWG-08192-B	Same comments as 93M-0476-ACC-60DEP-DWG-08180-B.
193	93M-0476-BCC-60DEP-DWG-08193-B	Same comments as 93M-0476-ACC-60DEP-DWG-08185-B.
194	93M-0476-BCC-60DEP-DWG-08194-B	Same comments as 93M-0476-ACC-60DEP-DWG-08180-B.
195	93M-0476-BCC-60DEP-DWG-08195-B	Same comments as 93M-0476-ACC-60DEP-DWG-08180-B.
196	93M-0476-BCC-60DEP-DWG-08196-B	Same comments as 93M-0476-ACC-60DEP-DWG-08180-B.

197	93M-0476-BCC-60DEP-DWG-08197-B	Same comments as 93M-0476-ACC-60DEP-DWG-08180-B.
198	93M-0476-BCC-60DEP-DWG-08198-B	Same comments as 93M-0476-ACC-60DEP-DWG-08180-B.
199	93M-0476-BCC-60DEP-DWG-08199-B	Same comments as 93M-0476-ACC-60DEP-DWG-08180-B.
200	93M-0476-BCC-60DEP-DWG-08200-B	Same comments as 93M-0476-ACC-60DEP-DWG-08180-B.
201	93M-0476-BCC-60DEP-DWG-08201-B	Same comments as 93M-0476-ACC-60DEP-DWG-08180-B.
202	93M-0476-BCC-60DEP-DWG-08202-B	Same comments as 93M-0476-ACC-60DEP-DWG-08180-B.
203	93M-0476-BCC-60DEP-DWG-08203-B	Same comments as 93M-0476-ACC-60DEP-DWG-08180-B.
204	93M-0476-BCC-60DEP-DWG-08204-B	Same comments as 93M-0476-ACC-60DEP-DWG-08180-B.
205	93M-0476-BCC-60DEP-DWG-08205-B	Same comments as 93M-0476-ACC-60DEP-DWG-08180-B.
206	93M-0476-BCC-60DEP-DWG-08206-B	Same comments as 93M-0476-ACC-60DEP-DWG-08180-B.
207	93M-0476-BCC-60DEP-DWG-08207-B	Same comments as 93M-0476-ACC-60DEP-DWG-08180-B.
208	93M-0476-BCC-60DEP-DWG-08208-B	Same comments as 93M-0476-ACC-60DEP-DWG-08180-B.
209	93M-0476-BCC-60DEP-DWG-08209-B	Same comments as 93M-0476-ACC-60DEP-DWG-08180-B.
210	93M-0476-BCC-60DEP-DWG-08210-B	Same comments as 93M-0476-ACC-60DEP-DWG-08180-B.
211	93M-0476-BCC-60DEP-DWG-08211-B	Same comments as 93M-0476-ACC-60DEP-DWG-08180-B.
212	93M-0476-BCC-60DEP-DWG-08212-B	Same comments as 93M-0476-ACC-60DEP-DWG-08180-B.
213	93M-0476-BCC-60DEP-DWG-08213-B	Same comments as 93M-0476-ACC-60DEP-DWG-08180-B.
214	93M-0476-BCC-60DEP-DWG-08214-B	Same comments as 93M-0476-ACC-60DEP-DWG-08180-B.
215	93M-0476-BCC-60DEP-DWG-08215-B	Same comments as 93M-0476-ACC-60DEP-DWG-08180-B.
216	93M-0476-BCC-60DEP-DWG-08216-B	Same comments as 93M-0476-ACC-60DEP-DWG-08180-B.
217	93M-0476-BCC-60DEP-DWG-08217-B	Same comments as 93M-0476-ACC-60DEP-DWG-08180-B.
218	93M-0476-BCC-60DEP-DWG-08218-B	Same comments as 93M-0476-ACC-60DEP-DWG-08180-B.

219	93M-0476-BCC-60DEP-DWG-08219-B	Same comments as 93M-0476-ACC-60DEP-DWG-08180-B.
220	93M-0476-BCC-60DEP-DWG-08220-B	Same comments as 93M-0476-ACC-60DEP-DWG-08180-B.
221	93M-0476-BCC-60DEP-DWG-08221-B	Same comments as 93M-0476-ACC-60DEP-DWG-08180-B.
222	93M-0476-BCC-60DEP-DWG-08222-B	Same comments as 93M-0476-ACC-60DEP-DWG-08180-B.
223	93M-0476-BCC-60DEP-DWG-08223-B	Same comments as 93M-0476-ACC-60DEP-DWG-08180-B.
224	93M-0476-BCC-60DEP-DWG-08224-B	Same comments as 93M-0476-ACC-60DEP-DWG-08180-B.
225	93M-0476-BCC-60DEP-DWG-08225-B	Same comments as 93M-0476-ACC-60DEP-DWG-08180-B.
226	93M-0476-BCC-60DEP-DWG-08226-B	Same comments as 93M-0476-ACC-60DEP-DWG-08180-B.
227	93M-0476-BCC-60DEP-DWG-08227-B	Same comments as 93M-0476-ACC-60DEP-DWG-08180-B.
228	93M-0476-BCC-60DEP-DWG-08228-B	Same comments as 93M-0476-ACC-60DEP-DWG-08180-B.
229	93M-0476-BCC-60DEP-DWG-08229-B	Same comments as 93M-0476-ACC-60DEP-DWG-08180-B.
230	93M-0476-BCC-60DEP-DWG-08230-B	Same comments as 93M-0476-ACC-60DEP-DWG-08180-B.
231	93M-0476-BCC-60DEP-DWG-08231-B	Same comments as 93M-0476-ACC-60DEP-DWG-08180-B.
232	93M-0476-BCC-60DEP-DWG-08232-B	Same comments as 93M-0476-ACC-60DEP-DWG-08180-B.
233	93M-0476-BCC-60DEP-DWG-08233-B	Same comments as 93M-0476-ACC-60DEP-DWG-08180-B.
234	93M-0476-BCC-60DEP-DWG-08234-B	Same comments as 93M-0476-ACC-60DEP-DWG-08180-B.
235	93M-0476-BCC-60DEP-DWG-08235-B	Same comments as 93M-0476-ACC-60DEP-DWG-08180-B.
236	93M-0476-BCC-60DEP-DWG-08236-B	Same comments as 93M-0476-ACC-60DEP-DWG-08180-B.
237	93M-0476-BCC-60DEP-DWG-08237-B	Same comments as 93M-0476-ACC-60DEP-DWG-08180-B.
238	93M-0476-BCC-60DEP-DWG-08238-B	Same comments as 93M-0476-ACC-60DEP-DWG-08180-B.
239	93M-0476-BCC-60DEP-DWG-08239-B	Same comments as 93M-0476-ACC-60DEP-DWG-08180-B.
240	93M-0476-BCC-60DEP-DWG-08240-B	Same comments as 93M-0476-ACC-60DEP-DWG-08180-B.

241	93M-0476-BCC-60DEP-DWG-08241-B	Approval is subject to approval of coordination package between multi-discipline.
242	93M-0476-BCC-60DEP-DWG-08242-B	Approval is subject to approval of coordination package between multi-discipline.
243	93M-0476-BCC-60DEP-DWG-08243-B	Approval is subject to approval of coordination package between multi-discipline.
244	93M-0476-BCC-60DEP-DWG-08244-B	Approval is subject to approval of coordination package between multi-discipline.
245	93M-0476-BCC-60DEP-DWG-08245-B	Approval is subject to approval of coordination package between multi-discipline.
246	93M-0476-BCC-60DEP-DWG-08246-B	Approval is subject to approval of coordination package between multi-discipline.
247	93M-0476-BCC-60DEP-DWG-08247-B	Approval is subject to approval of coordination package between multi-discipline.
248	93M-0476-BCC-60DEP-DWG-08248-B	Approval is subject to approval of coordination package between multi-discipline.
249	93M-0476-BCC-60DEP-DWG-08249-B	Approval is subject to approval of coordination package between multi-discipline.
250	93M-0476-BCC-60DEP-DWG-08250-B	Approval is subject to approval of coordination package between multi-discipline.
251	93M-0476-BCC-60DEP-DWG-08251-B	Approval is subject to approval of coordination package between multi-discipline.
252	93M-0476-BCC-60DEP-DWG-08252-B	Approval is subject to approval of coordination package between multi-discipline.
253	93M-0476-BCC-60DEP-DWG-08253-B	Approval is subject to approval of coordination package between multi-discipline.
254	93M-0476-BCC-60DEP-DWG-08254-B	Approval is subject to approval of coordination package between multi-discipline.
255	93M-0476-BCC-60DEP-DWG-08255-B	Approval is subject to approval of coordination package between multi-discipline.
256	93M-0476-BCC-60DEP-DWG-08256-B	Approval is subject to approval of coordination package between multi-discipline.
257	93M-0476-BCC-60DEP-DWG-08257-B	Approval is subject to approval of coordination package between multi-discipline.
258	93M-0476-BCC-60DEP-DWG-08258-B	Approval is subject to approval of coordination package between multi-discipline.
259	93M-0476-BCC-60DEP-DWG-08259-B	Approval is subject to approval of coordination package between multi-discipline.
260	93M-0476-BCC-60DEP-DWG-08260-B	Approval is subject to approval of coordination package between multi-discipline.
261	93M-0476-BCC-60DEP-DWG-08261-B	Approval is subject to approval of coordination package between multi-discipline.
262	93M-0476-BCC-60DEP-DWG-08262-B	Approval is subject to approval of coordination package between multi-discipline.

263	93M-0476-BCC-60DEP-DWG-08263-B	Approval is subject to approval of coordination package between multi-discipline.
264	93M-0476-BCC-60DEP-DWG-08264-B	Approval is subject to approval of coordination package between multi-discipline.
265	93M-0476-BCC-60DEP-DWG-08265-B	Approval is subject to approval of coordination package between multi-discipline.
266	93M-0476-BCC-60DEP-DWG-08266-B	Approval is subject to approval of coordination package between multi-discipline.
267	93M-0476-BCC-60DEP-DWG-08267-B	Approval is subject to approval of coordination package between multi-discipline.
268	93M-0476-BCC-60DEP-DWG-08268-B	Approval is subject to approval of coordination package between multi-discipline.
269	93M-0476-BCC-60DEP-DWG-08269-B	Approval is subject to approval of coordination package between multi-discipline.
270	93M-0476-BCC-60DEP-DWG-08270-B	Approval is subject to approval of coordination package between multi-discipline.
271	93M-0476-BCC-60DEP-DWG-08271-B	Approval is subject to approval of coordination package between multi-discipline.
272	93M-0476-BCC-60DEP-DWG-08272-B	Approval is subject to approval of coordination package between multi-discipline.
273	93M-0476-BCC-60DEP-DWG-08273-B	Approval is subject to approval of coordination package between multi-discipline.
274	93M-0476-BCC-60DEP-DWG-08274-B	Approval is subject to approval of coordination package between multi-discipline.
275	93M-0476-BCC-60DEP-DWG-08275-B	Approval is subject to approval of coordination package between multi-discipline.
276	93M-0476-BCC-60DEP-DWG-08276-B	Approval is subject to approval of coordination package between multi-discipline.
277	93M-0476-BCC-60DEP-DWG-08277-B	Approval is subject to approval of coordination package between multi-discipline.
278	93M-0476-BCC-60DEP-DWG-08278-B	Approval is subject to approval of coordination package between multi-discipline.
279	93M-0476-BCC-60DEP-DWG-08279-B	Approval is subject to approval of coordination package between multi-discipline.
280	93M-0476-BCC-60DEP-DWG-08280-B	Approval is subject to approval of coordination package between multi-discipline.
281	93M-0476-BCC-60DEP-DWG-08281-B	Approval is subject to approval of coordination package between multi-discipline.
282	93M-0476-BCC-60DEP-DWG-08282-B	Approval is subject to approval of coordination package between multi-discipline.
283	93M-0476-BCC-60DEP-DWG-08283-B	Approval is subject to approval of coordination package between multi-discipline.
284	93M-0476-BCC-60DEP-DWG-08284-B	Approval is subject to approval of coordination package between multi-discipline.

285	93M-0476-BCC-60DEP-DWG-08285-B	Approval is subject to approval of coordination package between multi-discipline.
286	93M-0476-BCC-60DEP-DWG-08286-B	Approval is subject to approval of coordination package between multi-discipline.
287	93M-0476-BCC-60DEP-DWG-08287-B	Approval is subject to approval of coordination package between multi-discipline.
288	93M-0476-BCC-60DEP-DWG-08288-B	Approval is subject to approval of coordination package between multi-discipline.
289	93M-0476-BCC-60DEP-DWG-08289-B	Approval is subject to approval of coordination package between multi-discipline.
290	93M-0476-BCC-60DEP-DWG-08290-B	Approval is subject to approval of coordination package between multi-discipline.
291	93M-0476-BCC-60DEP-DWG-08291-B	Approval is subject to approval of coordination package between multi-discipline.
292	93M-0476-BCC-60DEP-DWG-08292-B	Approval is subject to approval of coordination package between multi-discipline.
293	93M-0476-BCC-60DEP-DWG-08293-B	Approval is subject to approval of coordination package between multi-discipline.
294	93M-0476-BCC-60DEP-DWG-08294-B	Approval is subject to approval of coordination package between multi-discipline.
295	93M-0476-BCC-60DEP-DWG-08295-B	Approval is subject to approval of coordination package between multi-discipline.
296	93M-0476-BCC-60DEP-DWG-08296-B	Approval is subject to approval of coordination package between multi-discipline.
297	93M-0476-BCC-60DEP-DWG-08297-B	Approval is subject to approval of coordination package between multi-discipline.
298	93M-0476-BCC-60DEP-DWG-08298-B	Approval is subject to approval of coordination package between multi-discipline.
299	93M-0476-BCC-60DEP-DWG-08299-B	Approval is subject to approval of coordination package between multi-discipline.
300	93M-0476-BCC-60DEP-DWG-08300-B	Approval is subject to approval of coordination package between multi-discipline.
301	93M-0476-BCC-60DEP-DWG-08301-B	Approval is subject to approval of coordination package between multi-discipline.
302	93M-0476-BCC-60DEP-DWG-08302-B	Approval is subject to approval of coordination package between multi-discipline.
303	93M-0476-BCC-60DEP-DWG-08303-B	Approval is subject to approval of coordination package between multi-discipline.
304	93M-0476-BCC-60DEP-DWG-08304-B	Approval is subject to approval of coordination package between multi-discipline.
305	93M-0476-BCC-60DEP-DWG-08305-B	Approval is subject to approval of coordination package between multi-discipline.

306	93M-0476-BCC-60DEP-DWG-08306-B	Same comments as 93M-0476-ACC-60DEP-DWG-08296-A.
307	93M-0476-BCC-60DEP-DWG-08307-B	Approval is subject to approval of coordination package between multi-discipline.
308	93M-0476-BCC-60DEP-DWG-08308-B	Approval is subject to approval of coordination package between multi-discipline.
309	93M-0476-BCC-60DEP-DWG-08309-B	Approval is subject to approval of coordination package between multi-discipline.
310	93M-0476-BCC-60DEP-DWG-08310-B	Approval is subject to approval of coordination package between multi-discipline.
311	93M-0476-BCC-60DEP-DWG-08311-B	Approval is subject to approval of coordination package between multi-discipline.
312	93M-0476-BCC-60DEP-DWG-08312-B	Approval is subject to approval of coordination package between multi-discipline.
313	93M-0476-BCC-60DEP-DWG-08313-B	Approval is subject to approval of coordination package between multi-discipline.
314	93M-0476-BCC-60DEP-DWG-08314-B	Approval is subject to approval of coordination package between multi-discipline.
315	93M-0476-BCC-60DEP-DWG-08315-B	Approval is subject to approval of coordination package between multi-discipline.
316	93M-0476-BCC-60DEP-DWG-08316-B	Approval is subject to approval of coordination package between multi-discipline.
317	93M-0476-BCC-60DEP-DWG-08317-B	Approval is subject to approval of coordination package between multi-discipline.
318	93M-0476-BCC-60DEP-DWG-08318-B	Approval is subject to approval of coordination package between multi-discipline.
319	93M-0476-BCC-60DEP-DWG-08319-B	Approval is subject to approval of coordination package between multi-discipline.
320	93M-0476-BCC-60DEP-DWG-08320-B	Approval is subject to approval of coordination package between multi-discipline.
321	93M-0476-BCC-60DEP-DWG-08321-B	Approval is subject to approval of coordination package between multi-discipline.
322	93M-0476-BCC-60DEP-DWG-08322-B	Approval is subject to approval of coordination package between multi-discipline.
323	93M-0476-BCC-60DEP-DWG-08323-B	Approval is subject to approval of coordination package between multi-discipline.
324	93M-0476-BCC-60DEP-DWG-08324-B	Approval is subject to approval of coordination package between multi-discipline.
325	93M-0476-BCC-60DEP-DWG-08325-B	Approval is subject to approval of coordination package between multi-discipline.
326	93M-0476-BCC-60DEP-DWG-08326-B	Approval is subject to approval of coordination package between multi-discipline.
327	93M-0476-BCC-60DEP-DWG-08327-B	Approval is subject to approval of coordination package between multi-discipline.

328	93M-0476-BCC-60DEP-DWG-08328-B	Approval is subject to approval of coordination package between multi-discipline.
329	93M-0476-BCC-60DEP-DWG-08329-B	Approval is subject to approval of coordination package between multi-discipline.
330	93M-0476-BCC-60DEP-DWG-08330-B	Approval is subject to approval of coordination package between multi-discipline.
331	93M-0476-BCC-60DEP-DWG-08331-B	Approval is subject to approval of coordination package between multi-discipline.
332	93M-0476-BCC-60DEP-DWG-08332-B	Approval is subject to approval of coordination package between multi-discipline.
333	93M-0476-BCC-60DEP-DWG-08333-B	Approval is subject to approval of coordination package between multi-discipline.
334	93M-0476-BCC-60DEP-DWG-08334-B	Approval is subject to approval of coordination package between multi-discipline.
335	93M-0476-BCC-60DEP-DWG-08335-B	Approval is subject to approval of coordination package between multi-discipline.
336	93M-0476-BCC-60DEP-DWG-08336-B	Approval is subject to approval of coordination package between multi-discipline.
337	93M-0476-BCC-60DEP-DWG-08337-B	Approval is subject to approval of coordination package between multi-discipline.
338	93M-0476-BCC-60DEP-DWG-08338-B	Approval is subject to approval of coordination package between multi-discipline.
339	93M-0476-BCC-60DEP-DWG-08339-B	Approval is subject to approval of coordination package between multi-discipline.
340	93M-0476-BCC-60DEP-DWG-08340-B	Approval is subject to approval of coordination package between multi-discipline.
341	93M-0476-BCC-60DEP-DWG-08341-B	Approval is subject to approval of coordination package between multi-discipline.
342	93M-0476-BCC-60DEP-DWG-08342-B	Approval is subject to approval of coordination package between multi-discipline.
343	93M-0476-BCC-60DEP-DWG-08343-B	Approval is subject to approval of coordination package between multi-discipline.
344	93M-0476-BCC-60DEP-DWG-08344-B	Approval is subject to approval of coordination package between multi-discipline.
345	93M-0476-BCC-60DEP-DWG-08345-B	Approval is subject to approval of coordination package between multi-discipline.
346	93M-0476-BCC-60DEP-DWG-08346-B	Approval is subject to approval of coordination package between multi-discipline.
347	93M-0476-BCC-60DEP-DWG-08347-B	Approval is subject to approval of coordination package between multi-discipline.
348	93M-0476-BCC-60DEP-DWG-08348-B	Approval is subject to approval of coordination package between multi-discipline.
349	93M-0476-BCC-60DEP-DWG-08349-B	Approval is subject to approval of coordination package between multi-discipline.

350	93M-0476-BCC-60DEP-DWG-08350-B	Approval is subject to approval of coordination package between multi-discipline.
351	93M-0476-BCC-60DEP-DWG-08351-B	Approval is subject to approval of coordination package between multi-discipline.
352	93M-0476-BCC-60DEP-DWG-08352-B	Approval is subject to approval of coordination package between multi-discipline.
353	93M-0476-BCC-60DEP-DWG-08353-B	Approval is subject to approval of coordination package between multi-discipline.
354	93M-0476-BCC-60DEP-DWG-08354-B	Approval is subject to approval of coordination package between multi-discipline.
355	93M-0476-BCC-60DEP-DWG-08355-B	Approval is subject to approval of coordination package between multi-discipline.
356	93M-0476-BCC-60DEP-DWG-08356-B	Approval is subject to approval of coordination package between multi-discipline.
357	93M-0476-BCC-60DEP-DWG-08357-B	Approval is subject to approval of coordination package between multi-discipline.
358	93M-0476-BCC-60DEP-DWG-08358-B	Approval is subject to approval of coordination package between multi-discipline.
359	93M-0476-BCC-60DEP-DWG-08359-B	Approval is subject to approval of coordination package between multi-discipline.
360	93M-0476-BCC-60DEP-DWG-08360-B	Approval is subject to approval of coordination package between multi-discipline.
361	93M-0476-BCC-60DEP-DWG-08361-B	Approval is subject to approval of coordination package between multi-discipline.
362	93M-0476-BCC-60DEP-DWG-08362-B	Approval is subject to approval of coordination package between multi-discipline.
363	93M-0476-BCC-60DEP-DWG-08363-B	Approval is subject to approval of coordination package between multi-discipline.
364	93M-0476-BCC-60DEP-DWG-08364-B	Approval is subject to approval of coordination package between multi-discipline.
365	93M-0476-BCC-60DEP-DWG-08365-B	Approval is subject to approval of coordination package between multi-discipline.
366	93M-0476-BCC-60DEP-DWG-08366-B	Approval is subject to approval of coordination package between multi-discipline.
367	93M-0476-BCC-60DEP-DWG-08367-B	Approval is subject to approval of coordination package between multi-discipline.
368	93M-0476-BCC-60DEP-DWG-08368-B	Approval is subject to approval of coordination package between multi-discipline.
369	93M-0476-BCC-60DEP-DWG-08369-B	Approval is subject to approval of coordination package between multi-discipline.
370	93M-0476-BCC-60DEP-DWG-08370-B	Approval is subject to approval of coordination package between multi-discipline.
371	93M-0476-BCC-60DEP-DWG-08371-B	Approval is subject to approval of coordination package between multi-discipline.

372	93M-0476-BCC-60DEP-DWG-08372-B	Approval is subject to approval of coordination package between multi-discipline.
373	93M-0476-BCC-60DEP-DWG-08373-B	Approval is subject to approval of coordination package between multi-discipline.
374	93M-0476-BCC-60DEP-DWG-08374-B	Approval is subject to approval of coordination package between multi-discipline.
375	93M-0476-BCC-60DEP-DWG-08375-B	Approval is subject to approval of coordination package between multi-discipline.
376	93M-0476-BCC-60DEP-DWG-08376-B	Approval is subject to approval of coordination package between multi-discipline.
377	93M-0476-BCC-60DEP-DWG-08377-B	Approval is subject to approval of coordination package between multi-discipline.
378	93M-0476-BCC-60DEP-DWG-08378-B	Approval is subject to approval of coordination package between multi-discipline.
379	93M-0476-BCC-60DEP-DWG-08379-B	Approval is subject to approval of coordination package between multi-discipline.
380	93M-0476-BCC-60DEP-DWG-08380-B	Approval is subject to approval of coordination package between multi-discipline.
381	93M-0476-BCC-60DEP-DWG-08381-B	Approval is subject to approval of coordination package between multi-discipline.
382	93M-0476-BCC-60DEP-DWG-08382-B	Approval is subject to approval of coordination package between multi-discipline.
383	93M-0476-BCC-60DEP-DWG-08383-B	Approval is subject to approval of coordination package between multi-discipline.
384	93M-0476-BCC-60DEP-DWG-08384-B	Approval is subject to approval of coordination package between multi-discipline.
385	93M-0476-BCC-60DEP-DWG-08385-B	Approval is subject to approval of coordination package between multi-discipline.
386	93M-0476-BCC-60DEP-DWG-08386-B	Approval is subject to approval of coordination package between multi-discipline.
387	93M-0476-BCC-60DEP-DWG-08387-B	Approval is subject to approval of coordination package between multi-discipline.
388	93M-0476-BCC-60DEP-DWG-08388-B	Approval is subject to approval of coordination package between multi-discipline.
389	93M-0476-BCC-60DEP-DWG-08389-B	Approval is subject to approval of coordination package between multi-discipline.
390	93M-0476-BCC-60DEP-DWG-08390-B	Approval is subject to approval of coordination package between multi-discipline.
391	93M-0476-BCC-60DEP-DWG-08391-B	Approval is subject to approval of coordination package between multi-discipline.
392	93M-0476-BCC-60DEP-DWG-08392-B	Approval is subject to approval of coordination package between multi-discipline.
393	93M-0476-BCC-60DEP-DWG-08393-B	Approval is subject to approval of coordination package between multi-discipline.

394	93M-0476-BCC-60DEP-DWG-08394-B	Approval is subject to approval of coordination package between multi-discipline.
395	93M-0476-BCC-60DEP-DWG-08395-B	Approval is subject to approval of coordination package between multi-discipline.
396	93M-0476-BCC-60DEP-DWG-08396-B	Approval is subject to approval of coordination package between multi-discipline.
397	93M-0476-BCC-60DEP-DWG-08397-B	Approval is subject to approval of coordination package between multi-discipline.
398	93M-0476-BCC-60DEP-DWG-08398-B	Approval is subject to approval of coordination package between multi-discipline.
399	93M-0476-BCC-60DEP-DWG-08399-B	Approval is subject to approval of coordination package between multi-discipline.
400	93M-0476-BCC-60DEP-DWG-08400-B	Approval is subject to approval of coordination package between multi-discipline.
401	93M-0476-BCC-60DEP-DWG-08401-B	Approval is subject to approval of coordination package between multi-discipline.
402	93M-0476-BCC-60DEP-DWG-08402-B	Approval is subject to approval of coordination package between multi-discipline.
403	93M-0476-BCC-60DEP-DWG-08403-B	Approval is subject to approval of coordination package between multi-discipline.
404	93M-0476-BCC-60DEP-DWG-08404-B	Approval is subject to approval of coordination package between multi-discipline.
405	93M-0476-BCC-60DEP-DWG-08405-B	Approval is subject to approval of coordination package between multi-discipline.
406	93M-0476-BCC-60DEP-DWG-08406-B	Approval is subject to approval of coordination package between multi-discipline.
407	93M-0476-BCC-60DEP-DWG-08407-B	Approval is subject to approval of coordination package between multi-discipline.
408	93M-0476-BCC-60DEP-DWG-08408-B	Approval is subject to approval of coordination package between multi-discipline.
409	93M-0476-BCC-60DEP-DWG-08409-B	Approval is subject to approval of coordination package between multi-discipline.
410	93M-0476-BCC-60DEP-DWG-08410-B	Approval is subject to approval of coordination package between multi-discipline.
411	93M-0476-BCC-60DEP-DWG-08411-B	Approval is subject to approval of coordination package between multi-discipline.
412	93M-0476-BCC-60DEP-DWG-08412-B	Approval is subject to approval of coordination package between multi-discipline.
413	93M-0476-BCC-60DEP-DWG-08413-B	Approval is subject to approval of coordination package between multi-discipline.
414	93M-0476-BCC-60DEP-DWG-08414-B	Approval is subject to approval of coordination package between multi-discipline.
415	93M-0476-BCC-60DEP-DWG-08415-B	Approval is subject to approval of coordination package between multi-discipline.

416	93M-0476-BCC-60DEP-DWG-08416-B	Approval is subject to approval of coordination package between multi-discipline.
417	93M-0476-BCC-60DEP-DWG-08417-B	Approval is subject to approval of coordination package between multi-discipline.
418	93M-0476-BCC-60DEP-DWG-08418-B	Approval is subject to approval of coordination package between multi-discipline.
419	93M-0476-BCC-60DEP-DWG-08419-B	Approval is subject to approval of coordination package between multi-discipline.
420	93M-0476-BCC-60DEP-DWG-08420-B	Approval is subject to approval of coordination package between multi-discipline.
421	93M-0476-BCC-60DEP-DWG-08421-B	Approval is subject to approval of coordination package between multi-discipline.
422	93M-0476-BCC-60DEP-DWG-08422-B	Approval is subject to approval of coordination package between multi-discipline.
423	93M-0476-BCC-60DEP-DWG-08423-B	Approval is subject to approval of coordination package between multi-discipline.
424	93M-0476-BCC-60DEP-DWG-08424-B	Approval is subject to approval of coordination package between multi-discipline.
425	93M-0476-BCC-60DEP-DWG-08425-B	Approval is subject to approval of coordination package between multi-discipline.
426	93M-0476-BCC-60DEP-DWG-08426-B	Approval is subject to approval of coordination package between multi-discipline.
427	93M-0476-BCC-60DEP-DWG-08427-B	Approval is subject to approval of coordination package between multi-discipline.
428	93M-0476-BCC-60DEP-DWG-08428-B	Approval is subject to approval of coordination package between multi-discipline.
429	93M-0476-BCC-60DEP-DWG-08429-B	Approval is subject to approval of coordination package between multi-discipline.
430	93M-0476-BCC-60DEP-DWG-08430-B	Approval is subject to approval of coordination package between multi-discipline.
431	93M-0476-BCC-60DEP-DWG-08431-B	Approval is subject to approval of coordination package between multi-discipline.
432	93M-0476-BCC-60DEP-DWG-08432-B	Approval is subject to approval of coordination package between multi-discipline.
433	93M-0476-BCC-60DEP-DWG-08433-B	Approval is subject to approval of coordination package between multi-discipline.
434	93M-0476-BCC-60DEP-DWG-08434-B	Approval is subject to approval of coordination package between multi-discipline.
435	93M-0476-BCC-60DEP-DWG-08435-B	Approval is subject to approval of coordination package between multi-discipline.
436	93M-0476-BCC-60DEP-DWG-08436-B	Approval is subject to approval of coordination package between multi-discipline.
437	93M-0476-BCC-60DEP-DWG-08437-B	Approval is subject to approval of coordination package between multi-discipline.

438	93M-0476-BCC-60DEP-DWG-08438-B	Approval is subject to approval of coordination package between multi-discipline.
439	93M-0476-BCC-60DEP-DWG-08439-B	Approval is subject to approval of coordination package between multi-discipline.
440	93M-0476-BCC-60DEP-DWG-08440-B	Approval is subject to approval of coordination package between multi-discipline.
441	93M-0476-BCC-60DEP-DWG-08441-B	Approval is subject to approval of coordination package between multi-discipline.
442	93M-0476-BCC-60DEP-DWG-08442-B	Approval is subject to approval of coordination package between multi-discipline.
443	93M-0476-BCC-60DEP-DWG-08443-B	Approval is subject to approval of coordination package between multi-discipline.
444	93M-0476-BCC-60DEP-DWG-08444-B	Approval is subject to approval of coordination package between multi-discipline.
445	93M-0476-BCC-60DEP-DWG-08445-B	Approval is subject to approval of coordination package between multi-discipline.
446	93M-0476-BCC-60DEP-DWG-08446-B	Approval is subject to approval of coordination package between multi-discipline.
447	93M-0476-BCC-60DEP-DWG-08447-B	Approval is subject to approval of coordination package between multi-discipline.
448	93M-0476-BCC-60DEP-DWG-08448-B	Approval is subject to approval of coordination package between multi-discipline.
449	93M-0476-BCC-60DEP-DWG-08449-B	Approval is subject to approval of coordination package between multi-discipline.
450	93M-0476-BCC-60DEP-DWG-08450-B	Approval is subject to approval of coordination package between multi-discipline.
451	93M-0476-BCC-60DEP-DWG-08451-B	Approval is subject to approval of coordination package between multi-discipline.
452	93M-0476-BCC-60DEP-DWG-08452-B	Approval is subject to approval of coordination package between multi-discipline.
453	93M-0476-BCC-60DEP-DWG-08453-B	Approval is subject to approval of coordination package between multi-discipline.
454	93M-0476-BCC-60DEP-DWG-08454-B	Approval is subject to approval of coordination package between multi-discipline.
455	93M-0476-BCC-60DEP-DWG-08455-B	Approval is subject to approval of coordination package between multi-discipline.
456	93M-0476-BCC-60DEP-DWG-08456-B	Approval is subject to approval of coordination package between multi-discipline.
457	93M-0476-BCC-60DEP-DWG-08457-B	Approval is subject to approval of coordination package between multi-discipline.
458	93M-0476-BCC-60DEP-DWG-08458-B	Approval is subject to approval of coordination package between multi-discipline.
459	93M-0476-BCC-60DEP-DWG-08459-B	Approval is subject to approval of coordination package between multi-discipline.

460	93M-0476-BCC-60DEP-DWG-08460-B	Approval is subject to approval of coordination package between multi-discipline.
461	93M-0476-BCC-60DEP-DWG-08461-B	Approval is subject to approval of coordination package between multi-discipline.
462	93M-0476-BCC-60DEP-DWG-08462-B	Approval is subject to approval of coordination package between multi-discipline.
463	93M-0476-BCC-60DEP-DWG-08463-B	Approval is subject to approval of coordination package between multi-discipline.
464	93M-0476-BCC-60DEP-DWG-08464-B	Approval is subject to approval of coordination package between multi-discipline.
465	93M-0476-BCC-60DEP-DWG-08465-B	Approval is subject to approval of coordination package between multi-discipline.
466	93M-0476-BCC-60DEP-DWG-08466-B	Approval is subject to approval of coordination package between multi-discipline.
467	93M-0476-BCC-60DEP-DWG-08467-B	Approval is subject to approval of coordination package between multi-discipline.
468	93M-0476-BCC-60DEP-DWG-08468-B	Approval is subject to approval of coordination package between multi-discipline.
469	93M-0476-BCC-60DEP-DWG-08469-B	Approval is subject to approval of coordination package between multi-discipline.
470	93M-0476-BCC-60DEP-DWG-08470-B	Approval is subject to approval of coordination package between multi-discipline.
471	93M-0476-BCC-60DEP-DWG-08471-B	Approval is subject to approval of coordination package between multi-discipline.
472	93M-0476-BCC-60DEP-DWG-08472-B	Approval is subject to approval of coordination package between multi-discipline.
473	93M-0476-BCC-60DEP-DWG-08473-B	Approval is subject to approval of coordination package between multi-discipline.
474	93M-0476-BCC-60DEP-DWG-08474-B	Approval is subject to approval of coordination package between multi-discipline.
475	93M-0476-BCC-60DEP-DWG-08475-B	Approval is subject to approval of coordination package between multi-discipline.
476	93M-0476-BCC-60DEP-DWG-08476-B	Approval is subject to approval of coordination package between multi-discipline.
477	93M-0476-BCC-60DEP-DWG-08477-B	Approval is subject to approval of coordination package between multi-discipline.
478	93M-0476-BCC-60DEP-DWG-08478-B	Approval is subject to approval of coordination package between multi-discipline.
479	93M-0476-BCC-60DEP-DWG-08479-B	Approval is subject to approval of coordination package between multi-discipline.
480	93M-0476-BCC-60DEP-DWG-08480-B	Approval is subject to approval of coordination package between multi-discipline.
481	93M-0476-BCC-60DEP-DWG-08481-B	Approval is subject to approval of coordination package between multi-discipline.

482	93M-0476-BCC-60DEP-DWG-08482-B	Approval is subject to approval of coordination package between multi-discipline.
483	93M-0476-BCC-60DEP-DWG-08483-B	Approval is subject to approval of coordination package between multi-discipline.
484	93M-0476-BCC-60DEP-DWG-08484-B	Approval is subject to approval of coordination package between multi-discipline.
485	93M-0476-BCC-60DEP-DWG-08485-B	Approval is subject to approval of coordination package between multi-discipline.
486	93M-0476-BCC-60DEP-DWG-08486-B	Approval is subject to approval of coordination package between multi-discipline.
487	93M-0476-BCC-60DEP-DWG-08487-B	Approval is subject to approval of coordination package between multi-discipline.
488	93M-0476-BCC-60DEP-DWG-08488-B	Approval is subject to approval of coordination package between multi-discipline.
489	93M-0476-BCC-60DEP-DWG-08489-B	Approval is subject to approval of coordination package between multi-discipline.
490	93M-0476-BCC-60DEP-DWG-08490-B	Approval is subject to approval of coordination package between multi-discipline.
491	93M-0476-BCC-60DEP-DWG-08491-B	Approval is subject to approval of coordination package between multi-discipline.
492	93M-0476-BCC-60DEP-DWG-08492-B	Approval is subject to approval of coordination package between multi-discipline.
493	93M-0476-BCC-60DEP-DWG-08493-B	Approval is subject to approval of coordination package between multi-discipline.
494	93M-0476-BCC-60DEP-DWG-08494-B	Approval is subject to approval of coordination package between multi-discipline.
495	93M-0476-BCC-60DEP-DWG-08495-B	Approval is subject to approval of coordination package between multi-discipline.
496	93M-0476-BCC-60DEP-DWG-08496-B	Approval is subject to approval of coordination package between multi-discipline.
497	93M-0476-BCC-60DEP-DWG-08497-B	Approval is subject to approval of coordination package between multi-discipline.
498	93M-0476-BCC-60DEP-DWG-08498-B	Approval is subject to approval of coordination package between multi-discipline.
499	93M-0476-BCC-60DEP-DWG-08499-B	Approval is subject to approval of coordination package between multi-discipline.
500	93M-0476-BCC-60DEP-DWG-08500-B	Approval is subject to approval of coordination package between multi-discipline.
501	93M-0476-BCC-60DEP-DWG-08501-B	Approval is subject to approval of coordination package between multi-discipline.
502	93M-0476-BCC-60DEP-DWG-08502-B	Approval is subject to approval of coordination package between multi-discipline.
503	93M-0476-BCC-60DEP-DWG-08503-B	Approval is subject to approval of coordination package between multi-discipline.

504	93M-0476-BCC-60DEP-DWG-08504-B	Approval is subject to approval of coordination package between multi-discipline.
505	93M-0476-BCC-60DEP-DWG-08505-B	Approval is subject to approval of coordination package between multi-discipline.
506	93M-0476-BCC-60DEP-DWG-08506-B	Approval is subject to approval of coordination package between multi-discipline.
507	93M-0476-BCC-60DEP-DWG-08507-B	Approval is subject to approval of coordination package between multi-discipline.
508	93M-0476-BCC-60DEP-DWG-08508-B	Approval is subject to approval of coordination package between multi-discipline.
509	93M-0476-BCC-60DEP-DWG-08509-B	Approval is subject to approval of coordination package between multi-discipline.
510	93M-0476-BCC-60DEP-DWG-08510-B	Approval is subject to approval of coordination package between multi-discipline.
511	93M-0476-BCC-60DEP-DWG-08511-B	Approval is subject to approval of coordination package between multi-discipline.
512	93M-0476-BCC-60DEP-DWG-08512-B	Approval is subject to approval of coordination package between multi-discipline.
513	93M-0476-BCC-60DEP-DWG-08513-B	Approval is subject to approval of coordination package between multi-discipline.
514	93M-0476-BCC-60DEP-DWG-08514-B	Approval is subject to approval of coordination package between multi-discipline.
515	93M-0476-BCC-60DEP-DWG-08515-B	Approval is subject to approval of coordination package between multi-discipline.
516	93M-0476-BCC-60DEP-DWG-08516-B	Approval is subject to approval of coordination package between multi-discipline.
517	93M-0476-BCC-60DEP-DWG-08517-B	Approval is subject to approval of coordination package between multi-discipline.
518	93M-0476-BCC-60DEP-DWG-08518-B	Approval is subject to approval of coordination package between multi-discipline.
519	93M-0476-BCC-60DEP-DWG-08519-B	Approval is subject to approval of coordination package between multi-discipline.
520	93M-0476-BCC-60DEP-DWG-08520-B	Approval is subject to approval of coordination package between multi-discipline.
521	93M-0476-BCC-60DEP-DWG-08521-B	Approval is subject to approval of coordination package between multi-discipline.
522	93M-0476-BCC-60DEP-DWG-08522-B	Approval is subject to approval of coordination package between multi-discipline.
523	93M-0476-BCC-60DEP-DWG-08523-B	Approval is subject to approval of coordination package between multi-discipline.
524	93M-0476-BCC-60DEP-DWG-08524-B	Approval is subject to approval of coordination package between multi-discipline.
525	93M-0476-BCC-60DEP-DWG-08525-B	Approval is subject to approval of coordination package between multi-discipline.

526	93M-0476-BCC-60DEP-DWG-08526-B	Approval is subject to approval of coordination package between multi-discipline.
527	93M-0476-BCC-60DEP-DWG-08527-B	Approval is subject to approval of coordination package between multi-discipline.
528	93M-0476-BCC-60DEP-DWG-08528-B	Approval is subject to approval of coordination package between multi-discipline.
529	93M-0476-BCC-60DEP-DWG-08529-B	Approval is subject to approval of coordination package between multi-discipline.
530	93M-0476-BCC-60DEP-DWG-08530-B	Approval is subject to approval of coordination package between multi-discipline.
531	93M-0476-BCC-60DEP-DWG-08531-B	Approval is subject to approval of coordination package between multi-discipline.
532	93M-0476-BCC-60DEP-DWG-08532-B	Approval is subject to approval of coordination package between multi-discipline.
533	93M-0476-BCC-60DEP-DWG-08533-B	Approval is subject to approval of coordination package between multi-discipline.
534	93M-0476-BCC-60DEP-DWG-08534-B	Approval is subject to approval of coordination package between multi-discipline.
535	93M-0476-BCC-60DEP-DWG-08535-B	Approval is subject to approval of coordination package between multi-discipline.
536	93M-0476-BCC-60DEP-DWG-08536-B	Approval is subject to approval of coordination package between multi-discipline.
537	93M-0476-BCC-60DEP-DWG-08537-B	Approval is subject to approval of coordination package between multi-discipline.
538	93M-0476-BCC-60DEP-DWG-08538-B	Approval is subject to approval of coordination package between multi-discipline.
539	93M-0476-BCC-60DEP-DWG-08539-B	Approval is subject to approval of coordination package between multi-discipline.
540	93M-0476-BCC-60DEP-DWG-08540-B	Approval is subject to approval of coordination package between multi-discipline.
541	93M-0476-BCC-60DEP-DWG-08541-B	Approval is subject to approval of coordination package between multi-discipline.
542	93M-0476-BCC-60DEP-DWG-08542-B	Approval is subject to approval of coordination package between multi-discipline.
543	93M-0476-BCC-60DEP-DWG-08543-B	Approval is subject to approval of coordination package between multi-discipline.
544	93M-0476-BCC-60DEP-DWG-08544-B	Approval is subject to approval of coordination package between multi-discipline.
545	93M-0476-BCC-60DEP-DWG-08545-B	Approval is subject to approval of coordination package between multi-discipline.
546	93M-0476-BCC-60DEP-DWG-08546-B	Approval is subject to approval of coordination package between multi-discipline.
547	93M-0476-BCC-60DEP-DWG-08547-B	Approval is subject to approval of coordination package between multi-discipline.

548	93M-0476-BCC-60DEP-DWG-08548-B	Approval is subject to approval of coordination package between multi-discipline.
549	93M-0476-BCC-60DEP-DWG-08549-B	Approval is subject to approval of coordination package between multi-discipline.
550	93M-0476-BCC-60DEP-DWG-08550-B	Approval is subject to approval of coordination package between multi-discipline.
551	93M-0476-BCC-60DEP-DWG-08551-B	Approval is subject to approval of coordination package between multi-discipline.
552	93M-0476-BCC-60DEP-DWG-08552-B	Approval is subject to approval of coordination package between multi-discipline.
553	93M-0476-BCC-60DEP-DWG-08553-B	Approval is subject to approval of coordination package between multi-discipline.
554	93M-0476-BCC-60DEP-DWG-08554-B	Approval is subject to approval of coordination package between multi-discipline.
555	93M-0476-BCC-60DEP-DWG-08555-B	Approval is subject to approval of coordination package between multi-discipline.
556	93M-0476-BCC-60DEP-DWG-08556-B	Approval is subject to approval of coordination package between multi-discipline.
557	93M-0476-BCC-60DEP-DWG-08557-B	Approval is subject to approval of coordination package between multi-discipline.
558	93M-0476-BCC-60DEP-DWG-08558-B	Approval is subject to approval of coordination package between multi-discipline.
559	93M-0476-BCC-60DEP-DWG-08559-B	Approval is subject to approval of coordination package between multi-discipline.
560	93M-0476-BCC-60DEP-DWG-08560-B	Approval is subject to approval of coordination package between multi-discipline.
561	93M-0476-BCC-60DEP-DWG-08561-B	Approval is subject to approval of coordination package between multi-discipline.
562	93M-0476-BCC-60DEP-DWG-08562-B	Approval is subject to approval of coordination package between multi-discipline.
563	93M-0476-BCC-60DEP-DWG-08563-B	Approval is subject to approval of coordination package between multi-discipline.
564	93M-0476-BCC-60DEP-DWG-08564-B	Approval is subject to approval of coordination package between multi-discipline.
565	93M-0476-BCC-60DEP-DWG-08565-B	Approval is subject to approval of coordination package between multi-discipline.
566	93M-0476-BCC-60DEP-DWG-08566-B	Approval is subject to approval of coordination package between multi-discipline.
567	93M-0476-BCC-60DEP-DWG-08567-B	Approval is subject to approval of coordination package between multi-discipline.
568	93M-0476-BCC-60DEP-DWG-08568-B	Approval is subject to approval of coordination package between multi-discipline.
569	93M-0476-BCC-60DEP-DWG-08569-B	Approval is subject to approval of coordination package between multi-discipline.

570	93M-0476-BCC-60DEP-DWG-08570-B	Approval is subject to approval of coordination package between multi-discipline.
571	93M-0476-BCC-60DEP-DWG-08571-B	Approval is subject to approval of coordination package between multi-discipline.
572	93M-0476-BCC-60DEP-DWG-08572-B	Approval is subject to approval of coordination package between multi-discipline.
573	93M-0476-BCC-60DEP-DWG-08573-B	Approval is subject to approval of coordination package between multi-discipline.
574	93M-0476-BCC-60DEP-DWG-08574-B	Approval is subject to approval of coordination package between multi-discipline.
575	93M-0476-BCC-60DEP-DWG-08575-B	Approval is subject to approval of coordination package between multi-discipline.
576	93M-0476-BCC-60DEP-DWG-08576-B	Approval is subject to approval of coordination package between multi-discipline.
577	93M-0476-BCC-60DEP-DWG-08577-B	Approval is subject to approval of coordination package between multi-discipline.
578	93M-0476-BCC-60DEP-DWG-08578-B	Approval is subject to approval of coordination package between multi-discipline.
579	93M-0476-BCC-60DEP-DWG-08579-B	Approval is subject to approval of coordination package between multi-discipline.
580	93M-0476-BCC-60DEP-DWG-08580-B	Approval is subject to approval of coordination package between multi-discipline.
581	93M-0476-BCC-60DEP-DWG-08581-B	Approval is subject to approval of coordination package between multi-discipline.
582	93M-0476-BCC-60DEP-DWG-08582-B	Approval is subject to approval of coordination package between multi-discipline.
583	93M-0476-BCC-60DEP-DWG-08583-B	Approval is subject to approval of coordination package between multi-discipline.
584	93M-0476-BCC-60DEP-DWG-08584-B	Approval is subject to approval of coordination package between multi-discipline.
585	93M-0476-BCC-60DEP-DWG-08585-B	Approval is subject to approval of coordination package between multi-discipline.
586	93M-0476-BCC-60DEP-DWG-08586-B	Approval is subject to approval of coordination package between multi-discipline.
587	93M-0476-BCC-60DEP-DWG-08587-B	Approval is subject to approval of coordination package between multi-discipline.
588	93M-0476-BCC-60DEP-DWG-08588-B	Approval is subject to approval of coordination package between multi-discipline.
589	93M-0476-BCC-60DEP-DWG-08589-B	Approval is subject to approval of coordination package between multi-discipline.
590	93M-0476-BCC-60DEP-DWG-08590-B	Approval is subject to approval of coordination package between multi-discipline.
591	93M-0476-BCC-60DEP-DWG-08591-B	Approval is subject to approval of coordination package between multi-discipline.

592	93M-0476-BCC-60DEP-DWG-08592-B	Approval is subject to approval of coordination package between multi-discipline.
593	93M-0476-BCC-60DEP-DWG-08593-B	Approval is subject to approval of coordination package between multi-discipline.
594	93M-0476-BCC-60DEP-DWG-08594-B	Approval is subject to approval of coordination package between multi-discipline.
595	93M-0476-BCC-60DEP-DWG-08595-B	Approval is subject to approval of coordination package between multi-discipline.
596	93M-0476-BCC-60DEP-DWG-08596-B	Approval is subject to approval of coordination package between multi-discipline.
597	93M-0476-BCC-60DEP-DWG-08597-B	Approval is subject to approval of coordination package between multi-discipline.
598	93M-0476-BCC-60DEP-DWG-08598-B	Approval is subject to approval of coordination package between multi-discipline.
599	93M-0476-BCC-60DEP-DWG-08599-B	Approval is subject to approval of coordination package between multi-discipline.
600	93M-0476-BCC-60DEP-DWG-08600-B	Approval is subject to approval of coordination package between multi-discipline.
601	93M-0476-BCC-60DEP-DWG-08601-B	Approval is subject to approval of coordination package between multi-discipline.
602	93M-0476-BCC-60DEP-DWG-08602-B	Approval is subject to approval of coordination package between multi-discipline.
603	93M-0476-BCC-60DEP-DWG-08603-B	Approval is subject to approval of coordination package between multi-discipline.
604	93M-0476-BCC-60DEP-DWG-08604-B	Approval is subject to approval of coordination package between multi-discipline.
605	93M-0476-BCC-60DEP-DWG-08605-B	Approval is subject to approval of coordination package between multi-discipline.
606	93M-0476-BCC-60DEP-DWG-08606-B	Approval is subject to approval of coordination package between multi-discipline.
607	93M-0476-BCC-60DEP-DWG-08607-B	Approval is subject to approval of coordination package between multi-discipline.
608	93M-0476-BCC-60DEP-DWG-08608-B	Approval is subject to approval of coordination package between multi-discipline.
609	93M-0476-BCC-60DEP-DWG-08609-B	Approval is subject to approval of coordination package between multi-discipline.
610	93M-0476-BCC-60DEP-DWG-08610-B	Approval is subject to approval of coordination package between multi-discipline.
611	93M-0476-BCC-60DEP-DWG-08611-B	Approval is subject to approval of coordination package between multi-discipline.
612	93M-0476-BCC-60DEP-DWG-08612-B	Approval is subject to approval of coordination package between multi-discipline.
613	93M-0476-BCC-60DEP-DWG-08613-B	Approval is subject to approval of coordination package between multi-discipline.

614	93M-0476-BCC-60DEP-DWG-08614-B	Approval is subject to approval of coordination package between multi-discipline.
615	93M-0476-BCC-60DEP-DWG-08615-B	Approval is subject to approval of coordination package between multi-discipline.
616	93M-0476-BCC-60DEP-DWG-08616-B	Approval is subject to approval of coordination package between multi-discipline.
617	93M-0476-BCC-60DEP-DWG-08617-B	Approval is subject to approval of coordination package between multi-discipline.
618	93M-0476-BCC-60DEP-DWG-08618-B	Approval is subject to approval of coordination package between multi-discipline.
619	93M-0476-BCC-60DEP-DWG-08619-B	Approval is subject to approval of coordination package between multi-discipline.
620	93M-0476-BCC-60DEP-DWG-08620-B	Approval is subject to approval of coordination package between multi-discipline.
621	93M-0476-BCC-60DEP-DWG-08621-B	Approval is subject to approval of coordination package between multi-discipline.
622	93M-0476-BCC-60DEP-DWG-08622-B	Approval is subject to approval of coordination package between multi-discipline.
623	93M-0476-BCC-60DEP-DWG-08623-B	Approval is subject to approval of coordination package between multi-discipline.
624	93M-0476-BCC-60DEP-DWG-08624-B	Approval is subject to approval of coordination package between multi-discipline.
625	93M-0476-BCC-60DEP-DWG-08625-B	Approval is subject to approval of coordination package between multi-discipline.
626	93M-0476-BCC-60DEP-DWG-08626-B	Approval is subject to approval of coordination package between multi-discipline.
627	93M-0476-BCC-60DEP-DWG-08627-B	Approval is subject to approval of coordination package between multi-discipline.
628	93M-0476-BCC-60DEP-DWG-08628-B	Approval is subject to approval of coordination package between multi-discipline.
629	93M-0476-BCC-60DEP-DWG-08629-B	Approval is subject to approval of coordination package between multi-discipline.
630	93M-0476-BCC-60DEP-DWG-08630-B	Approval is subject to approval of coordination package between multi-discipline.
631	93M-0476-BCC-60DEP-DWG-08631-B	Approval is subject to approval of coordination package between multi-discipline.
632	93M-0476-BCC-60DEP-DWG-08632-B	Approval is subject to approval of coordination package between multi-discipline.
633	93M-0476-BCC-60DEP-DWG-08633-B	Approval is subject to approval of coordination package between multi-discipline.
634	93M-0476-BCC-60DEP-DWG-08634-B	Approval is subject to approval of coordination package between multi-discipline.
635	93M-0476-BCC-60DEP-DWG-08635-B	Approval is subject to approval of coordination package between multi-discipline.

636	93M-0476-BCC-60DEP-DWG-08636-B	Approval is subject to approval of coordination package between multi-discipline.
637	93M-0476-BCC-60DEP-DWG-08637-B	Approval is subject to approval of coordination package between multi-discipline.
638	93M-0476-BCC-60DEP-DWG-08638-B	Approval is subject to approval of coordination package between multi-discipline.
639	93M-0476-BCC-60DEP-DWG-08639-B	Approval is subject to approval of coordination package between multi-discipline.
640	93M-0476-BCC-60DEP-DWG-08640-B	Approval is subject to approval of coordination package between multi-discipline.
641	93M-0476-BCC-60DEP-DWG-08641-B	Approval is subject to approval of coordination package between multi-discipline.
642	93M-0476-BCC-60DEP-DWG-08642-B	Approval is subject to approval of coordination package between multi-discipline.
643	93M-0476-BCC-60DEP-DWG-08643-B	Approval is subject to approval of coordination package between multi-discipline.
644	93M-0476-BCC-60DEP-DWG-08644-B	Approval is subject to approval of coordination package between multi-discipline.
645	93M-0476-BCC-60DEP-DWG-08645-B	Approval is subject to approval of coordination package between multi-discipline.
646	93M-0476-BCC-60DEP-DWG-08646-B	Approval is subject to approval of coordination package between multi-discipline.
647	93M-0476-BCC-60DEP-DWG-08647-B	Approval is subject to approval of coordination package between multi-discipline.
648	93M-0476-BCC-60DEP-DWG-08648-B	Approval is subject to approval of coordination package between multi-discipline.
649	93M-0476-BCC-60DEP-DWG-08649-B	Approval is subject to approval of coordination package between multi-discipline.
650	93M-0476-BCC-60DEP-DWG-08650-B	Approval is subject to approval of coordination package between multi-discipline.
651	93M-0476-BCC-60DEP-DWG-08651-B	Approval is subject to approval of coordination package between multi-discipline.
652	93M-0476-BCC-60DEP-DWG-08652-B	Approval is subject to approval of coordination package between multi-discipline.
653	93M-0476-BCC-60DEP-DWG-08653-B	Approval is subject to approval of coordination package between multi-discipline.
654	93M-0476-BCC-60DEP-DWG-08654-B	Approval is subject to approval of coordination package between multi-discipline.
655	93M-0476-BCC-60DEP-DWG-08655-B	Approval is subject to approval of coordination package between multi-discipline.
656	93M-0476-BCC-60DEP-DWG-08656-B	Approval is subject to approval of coordination package between multi-discipline.
657	93M-0476-BCC-60DEP-DWG-08657-B	Approval is subject to approval of coordination package between multi-discipline.

658	93M-0476-BCC-60DEP-DWG-08658-B	Approval is subject to approval of coordination package between multi-discipline.
659	93M-0476-BCC-60DEP-DWG-08659-B	Approval is subject to approval of coordination package between multi-discipline.
660	93M-0476-BCC-60DEP-DWG-08660-B	Approval is subject to approval of coordination package between multi-discipline.
661	93M-0476-BCC-60DEP-DWG-08661-B	Approval is subject to approval of coordination package between multi-discipline.
662	93M-0476-BCC-60DEP-DWG-08662-B	Approval is subject to approval of coordination package between multi-discipline.
663	93M-0476-BCC-60DEP-DWG-08663-B	Approval is subject to approval of coordination package between multi-discipline.
664	93M-0476-BCC-60DEP-DWG-08664-B	Approval is subject to approval of coordination package between multi-discipline.
665	93M-0476-BCC-60DEP-DWG-08665-B	Approval is subject to approval of coordination package between multi-discipline.
666	93M-0476-BCC-60DEP-DWG-08666-B	Approval is subject to approval of coordination package between multi-discipline.
667	93M-0476-BCC-60DEP-DWG-08667-B	Approval is subject to approval of coordination package between multi-discipline.
668	93M-0476-BCC-60DEP-DWG-08668-B	Approval is subject to approval of coordination package between multi-discipline.
669	93M-0476-BCC-60DEP-DWG-08669-B	Approval is subject to approval of coordination package between multi-discipline.
670	93M-0476-BCC-60DEP-DWG-08670-B	Approval is subject to approval of coordination package between multi-discipline.
671	93M-0476-BCC-60DEP-DWG-08671-B	Approval is subject to approval of coordination package between multi-discipline.
672	93M-0476-BCC-60DEP-DWG-08672-B	Approval is subject to approval of coordination package between multi-discipline.
673	93M-0476-BCC-60DEP-DWG-08673-B	Approval is subject to approval of coordination package between multi-discipline.
674	93M-0476-BCC-60DEP-DWG-08674-B	Approval is subject to approval of coordination package between multi-discipline.
675	93M-0476-BCC-60DEP-DWG-08675-B	Approval is subject to approval of coordination package between multi-discipline.
676	93M-0476-BCC-60DEP-DWG-08676-B	Approval is subject to approval of coordination package between multi-discipline.
677	93M-0476-BCC-60DEP-DWG-08677-B	Approval is subject to approval of coordination package between multi-discipline.
678	93M-0476-BCC-60DEP-DWG-08678-B	Approval is subject to approval of coordination package between multi-discipline.
679	93M-0476-BCC-60DEP-DWG-08679-B	Approval is subject to approval of coordination package between multi-discipline.

680	93M-0476-BCC-60DEP-DWG-08680-B	Approval is subject to approval of coordination package between multi-discipline.
681	93M-0476-BCC-60DEP-DWG-08681-B	Approval is subject to approval of coordination package between multi-discipline.
682	93M-0476-BCC-60DEP-DWG-08682-B	Approval is subject to approval of coordination package between multi-discipline.
683	93M-0476-BCC-60DEP-DWG-08683-B	Approval is subject to approval of coordination package between multi-discipline.
684	93M-0476-BCC-60DEP-DWG-08684-B	Approval is subject to approval of coordination package between multi-discipline.
685	93M-0476-BCC-60DEP-DWG-08685-B	Approval is subject to approval of coordination package between multi-discipline.
686	93M-0476-BCC-60DEP-DWG-08686-B	Approval is subject to approval of coordination package between multi-discipline.
687	93M-0476-BCC-60DEP-DWG-08687-B	Approval is subject to approval of coordination package between multi-discipline.
688	93M-0476-BCC-60DEP-DWG-08688-B	Approval is subject to approval of coordination package between multi-discipline.
689	93M-0476-BCC-60DEP-DWG-08689-B	Approval is subject to approval of coordination package between multi-discipline.
690	93M-0476-BCC-60DEP-DWG-08690-B	Approval is subject to approval of coordination package between multi-discipline.
691	93M-0476-BCC-60DEP-DWG-08691-B	Approval is subject to approval of coordination package between multi-discipline.
692	93M-0476-BCC-60DEP-DWG-08692-B	Approval is subject to approval of coordination package between multi-discipline.
693	93M-0476-BCC-60DEP-DWG-08693-B	Approval is subject to approval of coordination package between multi-discipline.
694	93M-0476-BCC-60DEP-DWG-08694-B	Approval is subject to approval of coordination package between multi-discipline.
695	93M-0476-BCC-60DEP-DWG-08695-B	Approval is subject to approval of coordination package between multi-discipline.
696	93M-0476-BCC-60DEP-DWG-08696-B	Approval is subject to approval of coordination package between multi-discipline.
697	93M-0476-BCC-60DEP-DWG-08697-B	Approval is subject to approval of coordination package between multi-discipline.
698	93M-0476-BCC-60DEP-DWG-08698-B	Approval is subject to approval of coordination package between multi-discipline.
699	93M-0476-BCC-60DEP-DWG-08699-B	Approval is subject to approval of coordination package between multi-discipline.
700	93M-0476-BCC-60DEP-DWG-08700-B	Approval is subject to approval of coordination package between multi-discipline.
701	93M-0476-BCC-60DEP-DWG-08701-B	Approval is subject to approval of coordination package between multi-discipline.

702	93M-0476-BCC-60DEP-DWG-08702-B	Approval is subject to approval of coordination package between multi-discipline.
703	93M-0476-BCC-60DEP-DWG-08703-B	Approval is subject to approval of coordination package between multi-discipline.
704	93M-0476-BCC-60DEP-DWG-08704-B	Approval is subject to approval of coordination package between multi-discipline.
705	93M-0476-BCC-60DEP-DWG-08705-B	Approval is subject to approval of coordination package between multi-discipline.
706	93M-0476-BCC-60DEP-DWG-08706-B	Approval is subject to approval of coordination package between multi-discipline.
707	93M-0476-BCC-60DEP-DWG-08707-B	Approval is subject to approval of coordination package between multi-discipline.
708	93M-0476-BCC-60DEP-DWG-08708-B	Approval is subject to approval of coordination package between multi-discipline.
709	93M-0476-BCC-60DEP-DWG-08709-B	Approval is subject to approval of coordination package between multi-discipline.
710	93M-0476-BCC-60DEP-DWG-08710-B	Approval is subject to approval of coordination package between multi-discipline.
711	93M-0476-BCC-60DEP-DWG-08711-B	Approval is subject to approval of coordination package between multi-discipline.
712	93M-0476-BCC-60DEP-DWG-08712-B	Approval is subject to approval of coordination package between multi-discipline.
713	93M-0476-BCC-60DEP-DWG-08713-B	Approval is subject to approval of coordination package between multi-discipline.
714	93M-0476-BCC-60DEP-DWG-08714-B	Approval is subject to approval of coordination package between multi-discipline.
715	93M-0476-BCC-60DEP-DWG-08715-B	Approval is subject to approval of coordination package between multi-discipline.
716	93M-0476-BCC-60DEP-DWG-08716-B	Approval is subject to approval of coordination package between multi-discipline.
717	93M-0476-BCC-60DEP-DWG-08717-B	Approval is subject to approval of coordination package between multi-discipline.
718	93M-0476-BCC-60DEP-DWG-08718-B	Approval is subject to approval of coordination package between multi-discipline.
719	93M-0476-BCC-60DEP-DWG-08719-B	Approval is subject to approval of coordination package between multi-discipline.
720	93M-0476-BCC-60DEP-DWG-08720-B	Approval is subject to approval of coordination package between multi-discipline.
721	93M-0476-BCC-60DEP-DWG-08721-B	Approval is subject to approval of coordination package between multi-discipline.
722	93M-0476-BCC-60DEP-DWG-08722-B	Approval is subject to approval of coordination package between multi-discipline.
723	93M-0476-BCC-60DEP-DWG-08723-B	Approval is subject to approval of coordination package between multi-discipline.

724	93M-0476-BCC-60DEP-DWG-08724-B	Approval is subject to approval of coordination package between multi-discipline.
725	93M-0476-BCC-60DEP-DWG-08725-B	Approval is subject to approval of coordination package between multi-discipline.
726	93M-0476-BCC-60DEP-DWG-08726-B	Approval is subject to approval of coordination package between multi-discipline.
727	93M-0476-BCC-60DEP-DWG-08727-B	Approval is subject to approval of coordination package between multi-discipline.
728	93M-0476-BCC-60DEP-DWG-08728-B	Approval is subject to approval of coordination package between multi-discipline.
729	93M-0476-BCC-60DEP-DWG-08729-B	Approval is subject to approval of coordination package between multi-discipline.
730	93M-0476-BCC-60DEP-DWG-08730-B	Approval is subject to approval of coordination package between multi-discipline.
731	93M-0476-BCC-60DEP-DWG-08731-B	Approval is subject to approval of coordination package between multi-discipline.
732	93M-0476-BCC-60DEP-DWG-08732-B	Approval is subject to approval of coordination package between multi-discipline.
733	93M-0476-BCC-60DEP-DWG-08733-B	Approval is subject to approval of coordination package between multi-discipline.
734	93M-0476-BCC-60DEP-DWG-08734-B	Approval is subject to approval of coordination package between multi-discipline.
735	93M-0476-BCC-60DEP-DWG-08735-B	Approval is subject to approval of coordination package between multi-discipline.
736	93M-0476-BCC-60DEP-DWG-08736-B	Approval is subject to approval of coordination package between multi-discipline.
737	93M-0476-BCC-60DEP-DWG-08737-B	Approval is subject to approval of coordination package between multi-discipline.
738	93M-0476-BCC-60DEP-DWG-08738-B	Approval is subject to approval of coordination package between multi-discipline.
739	93M-0476-BCC-60DEP-DWG-08739-B	Approval is subject to approval of coordination package between multi-discipline.
740	93M-0476-BCC-60DEP-DWG-08740-B	Approval is subject to approval of coordination package between multi-discipline.
741	93M-0476-BCC-60DEP-DWG-08741-B	Approval is subject to approval of coordination package between multi-discipline.
742	93M-0476-BCC-60DEP-DWG-08742-B	Approval is subject to approval of coordination package between multi-discipline.
743	93M-0476-BCC-60DEP-DWG-08743-B	Approval is subject to approval of coordination package between multi-discipline.
744	93M-0476-BCC-60DEP-DWG-08744-B	Approval is subject to approval of coordination package between multi-discipline.
745	93M-0476-BCC-60DEP-DWG-08745-B	Approval is subject to approval of coordination package between multi-discipline.

746	93M-0476-BCC-60DEP-DWG-08746-B	Approval is subject to approval of coordination package between multi-discipline.
747	93M-0476-BCC-60DEP-DWG-08747-B	Approval is subject to approval of coordination package between multi-discipline.
748	93M-0476-BCC-60DEP-DWG-08748-B	Approval is subject to approval of coordination package between multi-discipline.
749	93M-0476-BCC-60DEP-DWG-08749-B	Approval is subject to approval of coordination package between multi-discipline.
750	93M-0476-BCC-60DEP-DWG-08750-B	Approval is subject to approval of coordination package between multi-discipline.
751	93M-0476-BCC-60DEP-DWG-08751-B	Approval is subject to approval of coordination package between multi-discipline.
752	93M-0476-BCC-60DEP-DWG-08752-B	Approval is subject to approval of coordination package between multi-discipline.
753	93M-0476-BCC-60DEP-DWG-08753-B	Approval is subject to approval of coordination package between multi-discipline.
754	93M-0476-BCC-60DEP-DWG-08754-B	Approval is subject to approval of coordination package between multi-discipline.
755	93M-0476-BCC-60DEP-DWG-08755-B	Approval is subject to approval of coordination package between multi-discipline.
756	93M-0476-BCC-60DEP-DWG-08756-B	Approval is subject to approval of coordination package between multi-discipline.
757	93M-0476-BCC-60DEP-DWG-08757-B	Approval is subject to approval of coordination package between multi-discipline.
758	93M-0476-BCC-60DEP-DWG-08758-B	Approval is subject to approval of coordination package between multi-discipline.
759	93M-0476-BCC-60DEP-DWG-08759-B	Approval is subject to approval of coordination package between multi-discipline.
760	93M-0476-BCC-60DEP-DWG-08760-B	Approval is subject to approval of coordination package between multi-discipline.
761	93M-0476-BCC-60DEP-DWG-08761-B	Approval is subject to approval of coordination package between multi-discipline.
762	93M-0476-BCC-60DEP-DWG-08762-B	Approval is subject to approval of coordination package between multi-discipline.
763	93M-0476-BCC-60DEP-DWG-08763-B	Approval is subject to approval of coordination package between multi-discipline.
764	93M-0476-BCC-60DEP-DWG-08764-B	Approval is subject to approval of coordination package between multi-discipline.
765	93M-0476-BCC-60DEP-DWG-08765-B	Approval is subject to approval of coordination package between multi-discipline.
766	93M-0476-BCC-60DEP-DWG-08766-B	Approval is subject to approval of coordination package between multi-discipline.
767	93M-0476-BCC-60DEP-DWG-08767-B	Approval is subject to approval of coordination package between multi-discipline.

768	93M-0476-BCC-60DEP-DWG-08768-B	Approval is subject to approval of coordination package between multi-discipline.
769	93M-0476-BCC-60DEP-DWG-08769-B	Approval is subject to approval of coordination package between multi-discipline.
770	93M-0476-BCC-60DEP-DWG-08770-B	Approval is subject to approval of coordination package between multi-discipline.
771	93M-0476-BCC-60DEP-DWG-08771-B	Approval is subject to approval of coordination package between multi-discipline.
772	93M-0476-BCC-60DEP-DWG-08772-B	Approval is subject to approval of coordination package between multi-discipline.
773	93M-0476-BCC-60DEP-DWG-08773-B	Approval is subject to approval of coordination package between multi-discipline.
774	93M-0476-BCC-60DEP-DWG-08774-B	Approval is subject to approval of coordination package between multi-discipline.
775	93M-0476-BCC-60DEP-DWG-08775-B	Approval is subject to approval of coordination package between multi-discipline.
776	93M-0476-BCC-60DEP-DWG-08776-B	Approval is subject to approval of coordination package between multi-discipline.
777	93M-0476-BCC-60DEP-DWG-08777-B	Approval is subject to approval of coordination package between multi-discipline.
778	93M-0476-BCC-60DEP-DWG-08778-B	Approval is subject to approval of coordination package between multi-discipline.
779	93M-0476-BCC-60DEP-DWG-08779-B	Approval is subject to approval of coordination package between multi-discipline.
780	93M-0476-BCC-60DEP-DWG-08780-B	Approval is subject to approval of coordination package between multi-discipline.
781	93M-0476-BCC-60DEP-DWG-08781-B	Approval is subject to approval of coordination package between multi-discipline.
782	93M-0476-BCC-60DEP-DWG-08782-B	Approval is subject to approval of coordination package between multi-discipline.
783	93M-0476-BCC-60DEP-DWG-08783-B	Approval is subject to approval of coordination package between multi-discipline.
784	93M-0476-BCC-60DEP-DWG-08784-B	Approval is subject to approval of coordination package between multi-discipline.
785	93M-0476-BCC-60DEP-DWG-08785-B	Approval is subject to approval of coordination package between multi-discipline.
786	93M-0476-BCC-60DEP-DWG-08786-B	Approval is subject to approval of coordination package between multi-discipline.
787	93M-0476-BCC-60DEP-DWG-08787-B	Approval is subject to approval of coordination package between multi-discipline.
788	93M-0476-BCC-60DEP-DWG-08788-B	Approval is subject to approval of coordination package between multi-discipline.
789	93M-0476-BCC-60DEP-DWG-08789-B	Approval is subject to approval of coordination package between multi-discipline.

790	93M-0476-BCC-60DEP-DWG-08790-B	Approval is subject to approval of coordination package between multi-discipline.
791	93M-0476-BCC-60DEP-DWG-08791-B	Approval is subject to approval of coordination package between multi-discipline.
792	93M-0476-BCC-60DEP-DWG-08792-B	Approval is subject to approval of coordination package between multi-discipline.
793	93M-0476-BCC-60DEP-DWG-08793-B	Approval is subject to approval of coordination package between multi-discipline.
794	93M-0476-BCC-60DEP-DWG-08794-B	Approval is subject to approval of coordination package between multi-discipline.
795	93M-0476-BCC-60DEP-DWG-08795-B	Approval is subject to approval of coordination package between multi-discipline.
796	93M-0476-BCC-60DEP-DWG-08796-B	Approval is subject to approval of coordination package between multi-discipline.
797	93M-0476-BCC-60DEP-DWG-08797-B	Approval is subject to approval of coordination package between multi-discipline.
798	93M-0476-BCC-60DEP-DWG-08798-B	Approval is subject to approval of coordination package between multi-discipline.
799	93M-0476-BCC-60DEP-DWG-08799-B	Approval is subject to approval of coordination package between multi-discipline.
800	93M-0476-BCC-60DEP-DWG-08800-B	Approval is subject to approval of coordination package between multi-discipline.
801	93M-0476-BCC-60DEP-DWG-08801-B	Approval is subject to approval of coordination package between multi-discipline.
802	93M-0476-BCC-60DEP-DWG-08802-B	Approval is subject to approval of coordination package between multi-discipline.
803	93M-0476-BCC-60DEP-DWG-08803-B	Approval is subject to approval of coordination package between multi-discipline.
804	93M-0476-BCC-60DEP-DWG-08804-B	Approval is subject to approval of coordination package between multi-discipline.
805	93M-0476-BCC-60DEP-DWG-08805-B	Approval is subject to approval of coordination package between multi-discipline.
806	93M-0476-BCC-60DEP-DWG-08806-B	Approval is subject to approval of coordination package between multi-discipline.
807	93M-0476-BCC-60DEP-DWG-08807-B	Approval is subject to approval of coordination package between multi-discipline.
808	93M-0476-BCC-60DEP-DWG-08808-B	Approval is subject to approval of coordination package between multi-discipline.
809	93M-0476-BCC-60DEP-DWG-08809-B	Approval is subject to approval of coordination package between multi-discipline.
810	93M-0476-BCC-60DEP-DWG-08810-B	Approval is subject to approval of coordination package between multi-discipline.
811	93M-0476-BCC-60DEP-DWG-08811-B	Approval is subject to approval of coordination package between multi-discipline.

812	93M-0476-BCC-60DEP-DWG-08812-B	Approval is subject to approval of coordination package between multi-discipline.
813	93M-0476-BCC-60DEP-DWG-08813-B	Approval is subject to approval of coordination package between multi-discipline.
814	93M-0476-BCC-60DEP-DWG-08814-B	Approval is subject to approval of coordination package between multi-discipline.
815	93M-0476-BCC-60DEP-DWG-08815-B	Approval is subject to approval of coordination package between multi-discipline.
816	93M-0476-BCC-60DEP-DWG-08816-B	Approval is subject to approval of coordination package between multi-discipline.
817	93M-0476-BCC-60DEP-DWG-08817-B	Approval is subject to approval of coordination package between multi-discipline.
818	93M-0476-BCC-60DEP-DWG-08818-B	Approval is subject to approval of coordination package between multi-discipline.
819	93M-0476-BCC-60DEP-DWG-08819-B	Approval is subject to approval of coordination package between multi-discipline.
820	93M-0476-BCC-60DEP-DWG-08820-B	Approval is subject to approval of coordination package between multi-discipline.
821	93M-0476-BCC-60DEP-DWG-08821-B	Approval is subject to approval of coordination package between multi-discipline.
822	93M-0476-BCC-60DEP-DWG-08822-B	Approval is subject to approval of coordination package between multi-discipline.
823	93M-0476-BCC-60DEP-DWG-08823-B	Approval is subject to approval of coordination package between multi-discipline.
824	93M-0476-BCC-60DEP-DWG-08824-B	Approval is subject to approval of coordination package between multi-discipline.
825	93M-0476-BCC-60DEP-DWG-08825-B	Approval is subject to approval of coordination package between multi-discipline.
826	93M-0476-BCC-60DEP-DWG-08826-B	Approval is subject to approval of coordination package between multi-discipline.
827	93M-0476-BCC-60DEP-DWG-08827-B	Approval is subject to approval of coordination package between multi-discipline.
828	93M-0476-BCC-60DEP-DWG-08828-B	Approval is subject to approval of coordination package between multi-discipline.
829	93M-0476-BCC-60DEP-DWG-08829-B	Approval is subject to approval of coordination package between multi-discipline.
830	93M-0476-BCC-60DEP-DWG-08830-B	Approval is subject to approval of coordination package between multi-discipline.
831	93M-0476-BCC-60DEP-DWG-08831-B	Approval is subject to approval of coordination package between multi-discipline.
832	93M-0476-BCC-60DEP-DWG-08832-B	Approval is subject to approval of coordination package between multi-discipline.
833	93M-0476-BCC-60DEP-DWG-08833-B	Approval is subject to approval of coordination package between multi-discipline.

834	93M-0476-BCC-60DEP-DWG-08834-B	Approval is subject to approval of coordination package between multi-discipline.
835	93M-0476-BCC-60DEP-DWG-08835-B	Approval is subject to approval of coordination package between multi-discipline.
836	93M-0476-BCC-60DEP-DWG-08836-B	Approval is subject to approval of coordination package between multi-discipline.
837	93M-0476-BCC-60DEP-DWG-08837-B	Approval is subject to approval of coordination package between multi-discipline.
838	93M-0476-BCC-60DEP-DWG-08838-B	Approval is subject to approval of coordination package between multi-discipline.
839	93M-0476-BCC-60DEP-DWG-08839-B	Approval is subject to approval of coordination package between multi-discipline.
840	93M-0476-BCC-60DEP-DWG-08840-B	Approval is subject to approval of coordination package between multi-discipline.
841	93M-0476-BCC-60DEP-DWG-08841-B	Approval is subject to approval of coordination package between multi-discipline.
842	93M-0476-BCC-60DEP-DWG-08842-B	Approval is subject to approval of coordination package between multi-discipline.
843	93M-0476-BCC-60DEP-DWG-08843-B	Approval is subject to approval of coordination package between multi-discipline.
844	93M-0476-BCC-60DEP-DWG-08844-B	Approval is subject to approval of coordination package between multi-discipline.
845	93M-0476-BCC-60DEP-DWG-08845-B	Approval is subject to approval of coordination package between multi-discipline.
846	93M-0476-BCC-60DEP-DWG-08846-B	Approval is subject to approval of coordination package between multi-discipline.
847	93M-0476-BCC-60DEP-DWG-08847-B	Approval is subject to approval of coordination package between multi-discipline.
848	93M-0476-BCC-60DEP-DWG-08848-B	Approval is subject to approval of coordination package between multi-discipline.
849	93M-0476-BCC-60DEP-DWG-08849-B	Approval is subject to approval of coordination package between multi-discipline.
850	93M-0476-BCC-60DEP-DWG-08850-B	Approval is subject to approval of coordination package between multi-discipline.
851	93M-0476-BCC-60DEP-DWG-08851-B	Approval is subject to approval of coordination package between multi-discipline.
852	93M-0476-BCC-60DEP-DWG-08852-B	Approval is subject to approval of coordination package between multi-discipline.
853	93M-0476-BCC-60DEP-DWG-08853-B	Approval is subject to approval of coordination package between multi-discipline.
854	93M-0476-BCC-60DEP-DWG-08854-B	Approval is subject to approval of coordination package between multi-discipline.
855	93M-0476-BCC-60DEP-DWG-08855-B	Approval is subject to approval of coordination package between multi-discipline.

856	93M-0476-BCC-60DEP-DWG-08856-B	Approval is subject to approval of coordination package between multi-discipline.
857	93M-0476-BCC-60DEP-DWG-08857-B	Approval is subject to approval of coordination package between multi-discipline.
858	93M-0476-BCC-60DEP-DWG-08858-B	Approval is subject to approval of coordination package between multi-discipline.
859	93M-0476-BCC-60DEP-DWG-08859-B	Approval is subject to approval of coordination package between multi-discipline.
860	93M-0476-BCC-60DEP-DWG-08860-B	Approval is subject to approval of coordination package between multi-discipline.
861	93M-0476-BCC-60DEP-DWG-08861-B	Approval is subject to approval of coordination package between multi-discipline.
862	93M-0476-BCC-60DEP-DWG-08862-B	Approval is subject to approval of coordination package between multi-discipline.
863	93M-0476-BCC-60DEP-DWG-08863-B	Approval is subject to approval of coordination package between multi-discipline.
864	93M-0476-BCC-60DEP-DWG-08864-B	Approval is subject to approval of coordination package between multi-discipline.
865	93M-0476-BCC-60DEP-DWG-08865-B	Approval is subject to approval of coordination package between multi-discipline.
866	93M-0476-BCC-60DEP-DWG-08866-B	Approval is subject to approval of coordination package between multi-discipline.
867	93M-0476-BCC-60DEP-DWG-08867-B	Approval is subject to approval of coordination package between multi-discipline.
868	93M-0476-BCC-60DEP-DWG-08868-B	Approval is subject to approval of coordination package between multi-discipline.
869	93M-0476-BCC-60DEP-DWG-08869-B	Approval is subject to approval of coordination package between multi-discipline.
870	93M-0476-BCC-60DEP-DWG-08870-B	Approval is subject to approval of coordination package between multi-discipline.
871	93M-0476-BCC-60DEP-DWG-08871-B	Approval is subject to approval of coordination package between multi-discipline.
872	93M-0476-BCC-60DEP-DWG-08872-B	Approval is subject to approval of coordination package between multi-discipline.
873	93M-0476-BCC-60DEP-DWG-08873-B	Approval is subject to approval of coordination package between multi-discipline.
874	93M-0476-BCC-60DEP-DWG-08874-B	Approval is subject to approval of coordination package between multi-discipline.
875	93M-0476-BCC-60DEP-DWG-08875-B	Approval is subject to approval of coordination package between multi-discipline.
876	93M-0476-BCC-60DEP-DWG-08876-B	Approval is subject to approval of coordination package between multi-discipline.
877	93M-0476-BCC-60DEP-DWG-08877-B	Approval is subject to approval of coordination package between multi-discipline.

878	93M-0476-BCC-60DEP-DWG-08878-B	Approval is subject to approval of coordination package between multi-discipline.
879	93M-0476-BCC-60DEP-DWG-08879-B	Approval is subject to approval of coordination package between multi-discipline.
880	93M-0476-BCC-60DEP-DWG-08880-B	Approval is subject to approval of coordination package between multi-discipline.
881	93M-0476-BCC-60DEP-DWG-08881-B	Approval is subject to approval of coordination package between multi-discipline.
882	93M-0476-BCC-60DEP-DWG-08882-B	Approval is subject to approval of coordination package between multi-discipline.
883	93M-0476-BCC-60DEP-DWG-08883-B	Approval is subject to approval of coordination package between multi-discipline.
884	93M-0476-BCC-60DEP-DWG-08884-B	Approval is subject to approval of coordination package between multi-discipline.
885	93M-0476-BCC-60DEP-DWG-08885-B	Approval is subject to approval of coordination package between multi-discipline.
886	93M-0476-BCC-60DEP-DWG-08886-B	Approval is subject to approval of coordination package between multi-discipline.
887	93M-0476-BCC-60DEP-DWG-08887-B	Approval is subject to approval of coordination package between multi-discipline.
888	93M-0476-BCC-60DEP-DWG-08888-B	Approval is subject to approval of coordination package between multi-discipline.
889	93M-0476-BCC-60DEP-DWG-08889-B	Approval is subject to approval of coordination package between multi-discipline.
890	93M-0476-BCC-60DEP-DWG-08890-B	Approval is subject to approval of coordination package between multi-discipline.
891	93M-0476-BCC-60DEP-DWG-08891-B	Approval is subject to approval of coordination package between multi-discipline.
892	93M-0476-BCC-60DEP-DWG-08892-B	Approval is subject to approval of coordination package between multi-discipline.
893	93M-0476-BCC-60DEP-DWG-08893-B	Approval is subject to approval of coordination package between multi-discipline.
894	93M-0476-BCC-60DEP-DWG-08894-B	Approval is subject to approval of coordination package between multi-discipline.
895	93M-0476-BCC-60DEP-DWG-08895-B	Approval is subject to approval of coordination package between multi-discipline.
896	93M-0476-BCC-60DEP-DWG-08896-B	Approval is subject to approval of coordination package between multi-discipline.
897	93M-0476-BCC-60DEP-DWG-08897-B	Approval is subject to approval of coordination package between multi-discipline.
898	93M-0476-BCC-60DEP-DWG-08898-B	Approval is subject to approval of coordination package between multi-discipline.
899	93M-0476-BCC-60DEP-DWG-08899-B	Approval is subject to approval of coordination package between multi-discipline.

900	93M-0476-BCC-60DEP-DWG-08900-B	Approval is subject to approval of coordination package between multi-discipline.
901	93M-0476-BCC-60DEP-DWG-08901-B	Approval is subject to approval of coordination package between multi-discipline.
902	93M-0476-BCC-60DEP-DWG-08902-B	Approval is subject to approval of coordination package between multi-discipline.
903	93M-0476-BCC-60DEP-DWG-08903-B	Approval is subject to approval of coordination package between multi-discipline.
904	93M-0476-BCC-60DEP-DWG-08904-B	Approval is subject to approval of coordination package between multi-discipline.
905	93M-0476-BCC-60DEP-DWG-08905-B	Approval is subject to approval of coordination package between multi-discipline.
906	93M-0476-BCC-60DEP-DWG-08906-B	Approval is subject to approval of coordination package between multi-discipline.
907	93M-0476-BCC-60DEP-DWG-08907-B	Approval is subject to approval of coordination package between multi-discipline.
908	93M-0476-BCC-60DEP-DWG-08908-B	Approval is subject to approval of coordination package between multi-discipline.
909	93M-0476-BCC-60DEP-DWG-08909-B	Approval is subject to approval of coordination package between multi-discipline.
910	93M-0476-BCC-60DEP-DWG-08910-B	Approval is subject to approval of coordination package between multi-discipline.
911	93M-0476-BCC-60DEP-DWG-08911-B	Approval is subject to approval of coordination package between multi-discipline.
912	93M-0476-BCC-60DEP-DWG-08912-B	Approval is subject to approval of coordination package between multi-discipline.
913	93M-0476-BCC-60DEP-DWG-08913-B	Approval is subject to approval of coordination package between multi-discipline.
914	93M-0476-BCC-60DEP-DWG-08914-B	Approval is subject to approval of coordination package between multi-discipline.
915	93M-0476-BCC-60DEP-DWG-08915-B	Approval is subject to approval of coordination package between multi-discipline.
916	93M-0476-BCC-60DEP-DWG-08916-B	Approval is subject to approval of coordination package between multi-discipline.
917	93M-0476-BCC-60DEP-DWG-08917-B	Approval is subject to approval of coordination package between multi-discipline.
918	93M-0476-BCC-60DEP-DWG-08918-B	Approval is subject to approval of coordination package between multi-discipline.
919	93M-0476-BCC-60DEP-DWG-08919-B	Approval is subject to approval of coordination package between multi-discipline.
920	93M-0476-BCC-60DEP-DWG-08920-B	Approval is subject to approval of coordination package between multi-discipline.
921	93M-0476-BCC-60DEP-DWG-08921-B	Approval is subject to approval of coordination package between multi-discipline.

922	93M-0476-BCC-60DEP-DWG-08922-B	Approval is subject to approval of coordination package between multi-discipline.
923	93M-0476-BCC-60DEP-DWG-08923-B	Approval is subject to approval of coordination package between multi-discipline.
924	93M-0476-BCC-60DEP-DWG-08924-B	Approval is subject to approval of coordination package between multi-discipline.
925	93M-0476-BCC-60DEP-DWG-08925-B	Approval is subject to approval of coordination package between multi-discipline.
926	93M-0476-BCC-60DEP-DWG-08926-B	Approval is subject to approval of coordination package between multi-discipline.
927	93M-0476-BCC-60DEP-DWG-08927-B	Approval is subject to approval of coordination package between multi-discipline.
928	93M-0476-BCC-60DEP-DWG-08928-B	Approval is subject to approval of coordination package between multi-discipline.
929	93M-0476-BCC-60DEP-DWG-08929-B	Approval is subject to approval of coordination package between multi-discipline.
930	93M-0476-BCC-60DEP-DWG-08930-B	Approval is subject to approval of coordination package between multi-discipline.
931	93M-0476-BCC-60DEP-DWG-08931-B	Approval is subject to approval of coordination package between multi-discipline.
932	93M-0476-BCC-60DEP-DWG-08932-B	Approval is subject to approval of coordination package between multi-discipline.
933	93M-0476-BCC-60DEP-DWG-08933-B	Approval is subject to approval of coordination package between multi-discipline.
934	93M-0476-BCC-60DEP-DWG-08934-B	Approval is subject to approval of coordination package between multi-discipline.
935	93M-0476-BCC-60DEP-DWG-08935-B	Approval is subject to approval of coordination package between multi-discipline.
936	93M-0476-BCC-60DEP-DWG-08936-B	Approval is subject to approval of coordination package between multi-discipline.
937	93M-0476-BCC-60DEP-DWG-08937-B	Approval is subject to approval of coordination package between multi-discipline.
938	93M-0476-BCC-60DEP-DWG-08938-B	Approval is subject to approval of coordination package between multi-discipline.
939	93M-0476-BCC-60DEP-DWG-08939-B	Approval is subject to approval of coordination package between multi-discipline.
940	93M-0476-BCC-60DEP-DWG-08940-B	Approval is subject to approval of coordination package between multi-discipline.
941	93M-0476-BCC-60DEP-DWG-08941-B	Approval is subject to approval of coordination package between multi-discipline.
942	93M-0476-BCC-60DEP-DWG-08942-B	Approval is subject to approval of coordination package between multi-discipline.
943	93M-0476-BCC-60DEP-DWG-08943-B	Approval is subject to approval of coordination package between multi-discipline.

944	93M-0476-BCC-60DEP-DWG-08944-B	Approval is subject to approval of coordination package between multi-discipline.
945	93M-0476-BCC-60DEP-DWG-08945-B	Approval is subject to approval of coordination package between multi-discipline.
946	93M-0476-BCC-60DEP-DWG-08946-B	Approval is subject to approval of coordination package between multi-discipline.
947	93M-0476-BCC-60DEP-DWG-08947-B	Approval is subject to approval of coordination package between multi-discipline.
948	93M-0476-BCC-60DEP-DWG-08948-B	Approval is subject to approval of coordination package between multi-discipline.
949	93M-0476-BCC-60DEP-DWG-08949-B	Approval is subject to approval of coordination package between multi-discipline.
950	93M-0476-BCC-60DEP-DWG-08950-B	Approval is subject to approval of coordination package between multi-discipline.
951	93M-0476-BCC-60DEP-DWG-08951-B	Approval is subject to approval of coordination package between multi-discipline.
952	93M-0476-BCC-60DEP-DWG-08952-B	Approval is subject to approval of coordination package between multi-discipline.
953	93M-0476-BCC-60DEP-DWG-08953-B	Approval is subject to approval of coordination package between multi-discipline.
954	93M-0476-BCC-60DEP-DWG-08954-B	Approval is subject to approval of coordination package between multi-discipline.
955	93M-0476-BCC-60DEP-DWG-08955-B	Approval is subject to approval of coordination package between multi-discipline.
956	93M-0476-BCC-60DEP-DWG-08956-B	Approval is subject to approval of coordination package between multi-discipline.
957	93M-0476-BCC-60DEP-DWG-08957-B	Approval is subject to approval of coordination package between multi-discipline.
958	93M-0476-BCC-60DEP-DWG-08958-B	Approval is subject to approval of coordination package between multi-discipline.
959	93M-0476-BCC-60DEP-DWG-08959-B	Approval is subject to approval of coordination package between multi-discipline.
960	93M-0476-BCC-60DEP-DWG-08960-B	Approval is subject to approval of coordination package between multi-discipline.
961	93M-0476-BCC-60DEP-DWG-08961-B	Approval is subject to approval of coordination package between multi-discipline.
962	93M-0476-BCC-60DEP-DWG-08962-B	Approval is subject to approval of coordination package between multi-discipline.
963	93M-0476-BCC-60DEP-DWG-08963-B	Approval is subject to approval of coordination package between multi-discipline.
964	93M-0476-BCC-60DEP-DWG-08964-B	Approval is subject to approval of coordination package between multi-discipline.
965	93M-0476-BCC-60DEP-DWG-08965-B	Approval is subject to approval of coordination package between multi-discipline.

966	93M-0476-BCC-60DEP-DWG-08966-B	Approval is subject to approval of coordination package between multi-discipline.
967	93M-0476-BCC-60DEP-DWG-08967-B	Approval is subject to approval of coordination package between multi-discipline.
968	93M-0476-BCC-60DEP-DWG-08968-B	Approval is subject to approval of coordination package between multi-discipline.
969	93M-0476-BCC-60DEP-DWG-08969-B	Approval is subject to approval of coordination package between multi-discipline.
970	93M-0476-BCC-60DEP-DWG-08970-B	Approval is subject to approval of coordination package between multi-discipline.
971	93M-0476-BCC-60DEP-DWG-08971-B	Approval is subject to approval of coordination package between multi-discipline.
972	93M-0476-BCC-60DEP-DWG-08972-B	Approval is subject to approval of coordination package between multi-discipline.
973	93M-0476-BCC-60DEP-DWG-08973-B	Approval is subject to approval of coordination package between multi-discipline.
974	93M-0476-BCC-60DEP-DWG-08974-B	Approval is subject to approval of coordination package between multi-discipline.
975	93M-0476-BCC-60DEP-DWG-08975-B	Approval is subject to approval of coordination package between multi-discipline.
976	93M-0476-BCC-60DEP-DWG-08976-B	Approval is subject to approval of coordination package between multi-discipline.
977	93M-0476-BCC-60DEP-DWG-08977-B	Approval is subject to approval of coordination package between multi-discipline.

REVIEWED WITH COMMENT
MONORAILS PROJECT

- It is the contractor responsibility to ensure and revise all Dimensions and levels with the approved design drawings besides the coordination package before commencing any site Works.
- Please clarify embedded length of anchors in shop drawing
- welds in terms of (size , length & symbol) shall be provided
-The Contractor shall add clouds which show changes between this version and the previous one.
welds in terms of (size , length & symbol) shall be provided

-Connect all railing pipes to the post (L70*7) or provide calculations to ensure the safety of this cantilever.

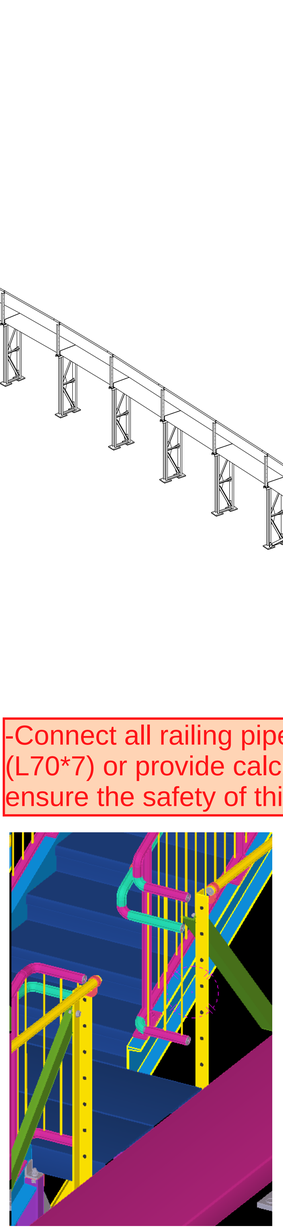

Snap taken from the IFC model

-Bracing should be added as shown in design reference.

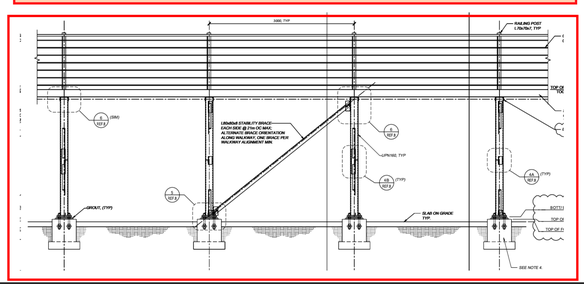

6 October Monorail
Engineering Unit
Valid For Construction

GENERAL NOTES:

1. THE DIMENSIONS SHOWN ARE NOMINAL (IN MILLIMETERS), U.N.O.
2. WELD SIZESHALL BE AISC MINIMUM OF 6 mm UNLESS NOTED OTHERWISE.
3. ALL FIELD WELDS SHALL BE INSPECTED PER QUALITY ASSURANCE AND SPECIAL INSPECTIONS.

REFERENCE DRAWINGS

1	93M-BOA-NAT-LOT-04833
2	93M-BOA-NAT-LOT-09170
3	93M-BOA-NAT-LOT-01976
4	93M-BOA-NAT-LOT-20021
5	
6	
7	
8	
9	

6TH OF OCTOBER CITY RAIL TRANSIT MONORAIL

The Authority | Consultant: Hill International | Main Contractor: ORASCOM CONSTRUCTION / BOMBARDIER | Structural Designer: INNOVA

KEY PLAN:

SCALE	SHOPDRAWING	DATE
AS SHOWN		12/05/2023

DRAWING TITLE
6TH OF OCTOBER MONORAIL
SERVICE WALKWAY
ZONE (1008)
3D VIEW

REV	DATE	DSG.	CHK.	APP.	AMENDMENTS	STATUS
B	12/05/2023	M.KH	M.KH	DR.M.M	ISSUED FOR INFORMATION	IFI
A	11/20/2022	M.KH	M.KH	DR.M.M	ISSUED FOR INFORMATION	IFI

Project Code	Rubric	Initiator	Lot	Ref	Number	Revision
93	M047	6ACC	60	DEP	DWG0800	1 B

AGS Copyright

REVIEWED WITH COMMENT
MONORAILS PROJECT

According to drawings no.93M-0476-INN-6ODEP-PAL-10009 to 93M-0476-INN-6ODEP-PAL-10011 for the planning of the foundations of zone01,There is a shift between the planning reference and the shop drawings as shown in the taken snaps below.

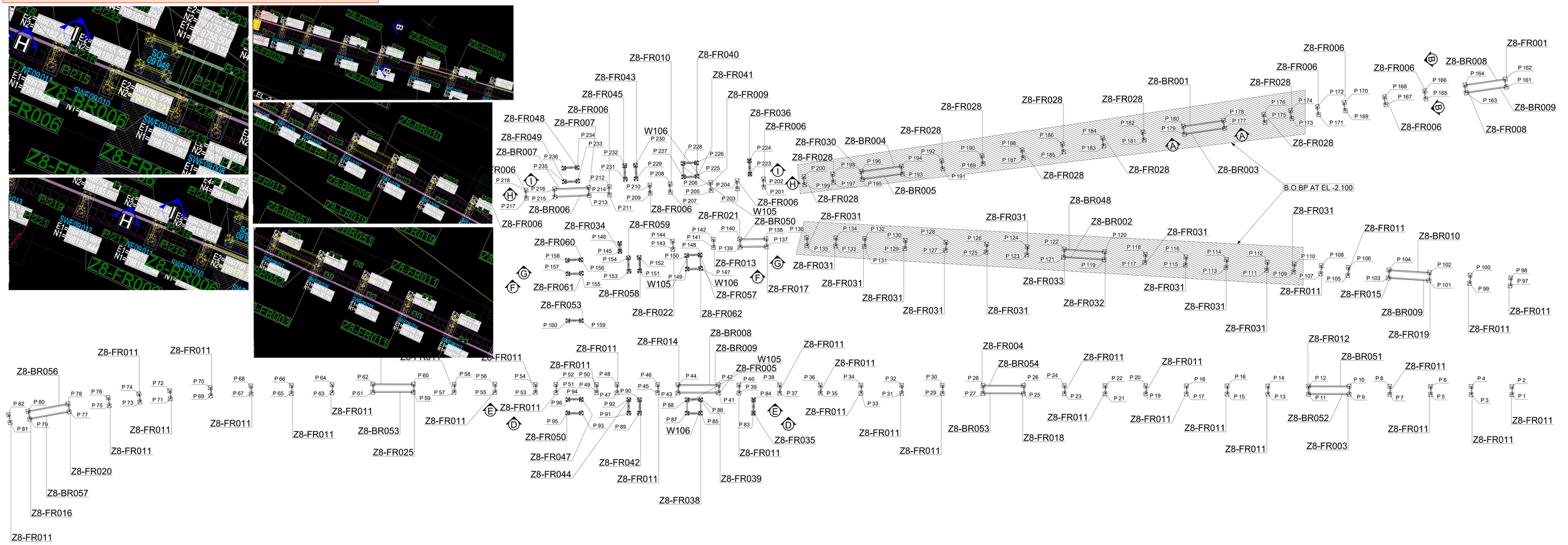
Z8-FR010
Z8-FR040
Z8-FR043
Z8-FR041
Z8-FR045
Z8-FR009
Z8-FR006
Z8-FR036
Z8-FR048
Z8-FR007
Z8-FR006
Z8-FR049
W106
Z8-BR007
Z8-FR030
Z8-BR004
Z8-FR028
Z8-FR028
Z8-FR028
Z8-FR028
Z8-BR001
Z8-FR006
Z8-FR006
Z8-FR028
Z8-FR006
Z8-FR001
Z8-BR008
Z8-BR009
Z8-FR008
Z8-FR028
Z8-BR005
Z8-BR003
B.O.BP AT EL -2.100
Z8-BR006
Z8-FR006
W105
Z8-FR006
Z8-FR021
Z8-BR050
Z8-FR031
Z8-BR048
Z8-FR034
Z8-FR059
Z8-FR060
Z8-FR013
Z8-FR031
Z8-BR002
Z8-FR031
Z8-FR011
Z8-BR010
Z8-FR061
Z8-FR058
W105
W106
Z8-FR057
Z8-FR017
Z8-FR031
Z8-FR031
Z8-FR031
Z8-FR033
Z8-FR031
Z8-FR011
Z8-FR015
Z8-FR053
Z8-FR022
Z8-FR062
Z8-FR031
Z8-FR032
Z8-FR031
Z8-FR031
Z8-BR009
Z8-FR019
Z8-FR011
Z8-FR011
Z8-FR011
Z8-BR056
Z8-FR011
Z8-FR011
Z8-FR011
Z8-FR011
Z8-FR011
Z8-FR011
Z8-FR011
Z8-FR014
Z8-BR008
Z8-BR009
W105
Z8-FR011
Z8-FR011
Z8-FR005
Z8-FR011
Z8-FR011
Z8-FR011
Z8-FR004
Z8-BR054
Z8-FR011
Z8-FR011
Z8-FR012
Z8-BR051
Z8-FR011
Z8-FR011
Z8-FR011
Z8-FR011
Z8-FR011
Z8-FR011
Z8-FR011

Same comment as 93M-0476-ACC-6ODEP-DWG-08002-B.

REVIEWED WITH COMMENT MONORAILS PROJECT

SWF		P64	599737.941	798193.563
SWF	8044	P65	599736.661	798196.353
SWF		P66	599737.247	798196.482

SWF		P67	599735.978	798199.253
SWF		P68	599736.560	798199.399
SWF		P69	599735.207	798202.130
SWF		P70	599735.784	798202.294
SWF	8047	P71	599734.349	798204.982
SWF		P72	599734.920	798205.164
SWF	8048	P73	599733.629	798207.133
SWF		P74	599734.196	798207.328
SWF	8049	P75	599732.874	798209.273
SWF		P76	599733.437	798209.481
SWF	8050	P77	599731.799	798212.050
SWF		P78	599732.355	798212.276
SWF	8051	P79	599730.639	798214.794
SWF		P80	599731.186	798215.041
SWF	8052	P81	599730.079	798216.145
SWF		P82	599730.626	798216.391
SSF	8147	P83	599742.602	798162.767
SSF		P84	599743.578	798162.981
SQF	8148	P85	599741.766	798166.576
SQF		P86	599742.742	798166.791
SQF		P87	599741.551	798167.553
SQF		P88	599742.528	798167.767
SQF	8149	P89	599740.801	798170.972
SQF		P90	599741.778	798171.186
SQF		P91	599740.630	798171.753
SQF		P92	599741.607	798171.967
SQF	8150	P93	599739.880	798175.172
SQF		P94	599740.856	798175.386
SQF		P95	599739.665	798176.149
SQF		P96	599740.642	798176.363
SWF	13034	P97	599763.845	798110.325
SWF		P98	599764.437	798110.417
SWF	13035	P99	599763.384	798113.289
SWF		P100	599763.977	798113.381
SWF	13036	P101	599762.924	798116.254
SWF		P102	599763.517	798116.346
SWF	13037	P103	599762.464	798119.218
SWF		P104	599763.057	798119.310
SWF	13038	P105	599762.004	798122.183
SWF		P106	599762.597	798122.275
SWF	13039	P107	599761.697	798124.159
SWF		P108	599762.290	798124.251
SWP	13040	P109	599761.390	798126.135
SWP		P110	599761.983	798126.227
SWP	13041	P111	599761.083	798128.112
SWP		P112	599761.676	798128.204
SWP	13042	P113	599760.623	798131.076
SWP		P114	599761.216	798131.168
SWP	13043	P115	599760.163	798134.040
SWP		P116	599760.756	798134.133
SWP	13044	P117	599759.703	798137.005
SWP		P118	599760.295	798137.097
SWP	13045	P119	599759.242	798139.969
SWP		P120	599759.835	798140.062
SWP	13046	P121	599758.782	798142.934
SWP		P122	599759.375	798143.026
SWP	13047	P123	599758.364	798145.629
SWP		P124	599758.957	798145.722
SWP	13048	P125	599757.903	798148.594
SWP		P126	599758.496	798148.686
SWP	13049	P127	599757.392	798151.550
SWP		P128	599757.984	798151.643
SWP	13050	P129	599756.880	798154.507
SWP		P130	599757.473	798154.599
SWP	13051	P131	599756.378	798157.443
SWP		P132	599756.968	798157.553

SWP	13052	P133	599755.956	798159.527
SWP		P134	599756.543	798159.650
SWP	13053	P135	599755.507	798161.605
SWP		P136	599756.091	798161.740
SWF	13054	P137	599754.789	798164.495
SWF		P138	599755.369	798164.649
SWF	13055	P139	599754.340	798166.394
SWF		P140	599754.920	798166.547
SWF	13056	P141	599753.891	798168.292
SWF		P142	599754.471	798168.446
SWF	13057	P143	599753.124	798171.192
SWF		P144	599753.704	798171.346
SSF	13058	P145	599752.126	798174.963
SSF		P146	599752.706	798175.116
SQF	13059	P147	599752.186	798168.875
SQF		P148	599753.152	798169.131
SQF		P149	599751.930	798169.842
SQF		P150	599752.896	798170.098
SQF	13060	P151	599751.034	798173.225
SQF		P152	599752.001	798173.481
SQF		P153	599750.829	798173.999
SQF		P154	599751.796	798174.255
SQF	13061	P155	599749.934	798177.382
SQF		P156	599750.901	798177.638
SQF		P157	599749.678	798178.349
SQF		P158	599750.645	798178.605
SDF	13062	P159	599746.521	798176.634
SDF		P160	599746.306	798177.610
SWF	10036	P161	599778.090	798113.760
SWF		P162	599778.651	798113.973
SWF	10037	P163	599777.024	798116.564
SWF		P164	599777.585	798116.777
SWF	10038	P165	599775.957	798119.368
SWF		P166	599776.518	798119.581
SWF	10039	P167	599774.891	798122.172
SWF		P168	599775.452	798122.385
SWF	10040	P169	599773.824	798124.976
SWF		P170	599774.385	798125.189
SWF	10041	P171	599773.113	798126.845
SWF		P172	599773.674	798127.059
SWP	10042	P173	599772.402	798128.715
SWP		P174	599772.963	798128.928
SWP	10043	P175	599771.691	798130.584
SWP		P176	599772.252	798130.797
SWP	10044	P177	599770.625	798133.388
SWP		P178	599771.186	798133.601
SWP	10045	P179	599769.558	798136.192
SWP		P180	599770.119	798136.405
SWP	10046	P181	599768.492	798138.996
SWP		P182	599769.053	798139.209
SWP	10047	P183	599767.425	798141.800
SWP		P184	599767.986	798142.013
SWP	10048	P185	599766.359	798144.604
SWP		P186	599766.919	798144.817
SWP	10049	P187	599765.292	798147.408
SWP		P188	599765.853	798147.621
SWP	10050	P189	599764.229	798150.203
SWP		P190	599764.790	798150.417
SWP	10051	P191	599763.211	798153.026
SWP		P192	599763.772	798153.239
SWP	10052	P193	599762.193	798155.848
SWP		P194	599762.754	798156.062
SWP	10053	P195	599761.171	798158.665
SWP		P196	599761.738	798158.862
SWP	9001	P197	599760.503	798160.698
SWP		P198	599761.074	798160.881

SWP	9002	P199	599759.861	798162.738
SWP		P200	599760.436	798162.909
SWF	9003	P201	599759.050	798165.623
SWF		P202	599759.630	798165.777
SWF	9004	P203	599758.501	798167.495
SWF		P204	599759.081	798167.649
SWF	9005	P205	599757.951	798169.367
SWF		P206	599758.531	798169.520
SWF	9006	P207	599757.184	798172.267
SWF		P208	599757.764	798172.421
SWF	9007	P209	599756.800	798173.717
SWF		P210	599757.380	798173.871
SWF	9008	P211	599756.033	798176.617
SWF		P212	599756.613	798176.771
SWF	9009	P213	599755.649	798178.067
SWF		P214	599756.229	798178.221
SWF	9010	P215	599755.001	798180.514
SWF		P216	599755.581	798180.667
SWF	9011	P217	599754.464	798182.544
SWF		P218	599755.044	798182.697
SWF	9012	P219	599753.697	798185.444
SWF		P220	599754.277	798185.597
SWF	9013	P221	599752.929	798188.344
SWF		P222	599753.509	798188.497
SSF	9045	P223	599759.757	798166.845
SSF		P224	599760.724	798167.101
SQF	9046	P225	599758.759	798170.615
SQF		P226	599759.726	798170.871
SQF		P227	599758.503	798171.582
SQF		P228	599759.470	798171.838
SQF	9047	P229	599757.608	798174.965
SQF		P230	599758.575	798175.221
SQF		P231	599757.403	798175.739
SQF		P232	599758.370	798175.995
SQF	9048	P233	599756.508	798179.122
SQF		P234	599757.474	798179.378
SQF		P235	599756.252	798180.089
SQF		P236	599757.218	798180.345

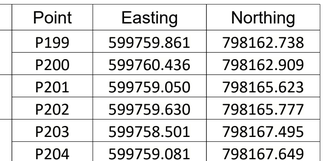

DRAWING TITLE
6TH OF OCTOBER MONORAIL SERVICE WALKWAY
ZONE (1008)
BASE COORDINATES

Project Code	Rubric	Initiator	Lot	Ref	Number	Revision
9 3 M	0 4 7 6	A C C	6 0 D E P	D W G	0 8 0 0 3	B

This base plate's easting and northing are matching with the design drawings as shown in the snap above acc. to design dwg NO. 9 3 M 0 4 7 6 I N N 6 0 D E P P A L 1 0 0 0 8 B

6 October Monorail Engineering Unit
Valid For Construction

GENERAL NOTES:

1. THE DIMENSIONS SHOWN ARE NOMINAL (IN MILLIMETERS), U.N.O.
2. WELD SIZESHALL BE AISC MINIMUM OF 6 mm UNLESS NOTED OTHERWISE.
3. ALL FIELD WELDS SHALL BE INSPECTED PER QUALITY ASSURANCE AND SPECIAL INSPECTIONS.

REFERENCE DRAWINGS

1	93M-BOA-NAT-LOT-04833
2	93M-BOA-NAT-LOT-09170
3	93M-BOA-NAT-LOT-01976
4	93M-BOA-NAT-LOT-20021
5	
6	
7	
8	
9	

6TH OF OCTOBER CITY RAIL TRANSIT MONORAIL

The Authority — Consultant: Hill International — Main Contractor: ORASCOM CONSTRUCTION / BOMBARDIER — Structural Designer: INNOVA TRANSPORTATION

KEY PLAN:

SCALE	SHOPDRAWING	DATE
AS SHOWN		12/05/2023

REV	DATE	DSG.	CHK.	APP.	AMENDMENTS	STATUS
B	12/05/2023	M.KH	M.KH	DR.M.M	ISSUED FOR INFORMATION	IFI
A	11/20/2022	M.KH	M.KH	DR.M.M	ISSUED FOR INFORMATION	IFI

DRAWING TITLE
6TH OF OCTOBER MONORAIL SERVICE WALKWAY
ZONE (1008)
BASE COORDINATES

Project Code	Rubric	Initiator	Lot	Ref	Number	Revision
9 3 M	0 4 7 6	A C C	6 0 D E P	D W G	0 8 0 0 3	B

Tekla structures

Same comment as
93M-0476-ACC-6ODEP-DWG-08002-B.

REVIEWED WITH COMMENT MONORAILS PROJECT

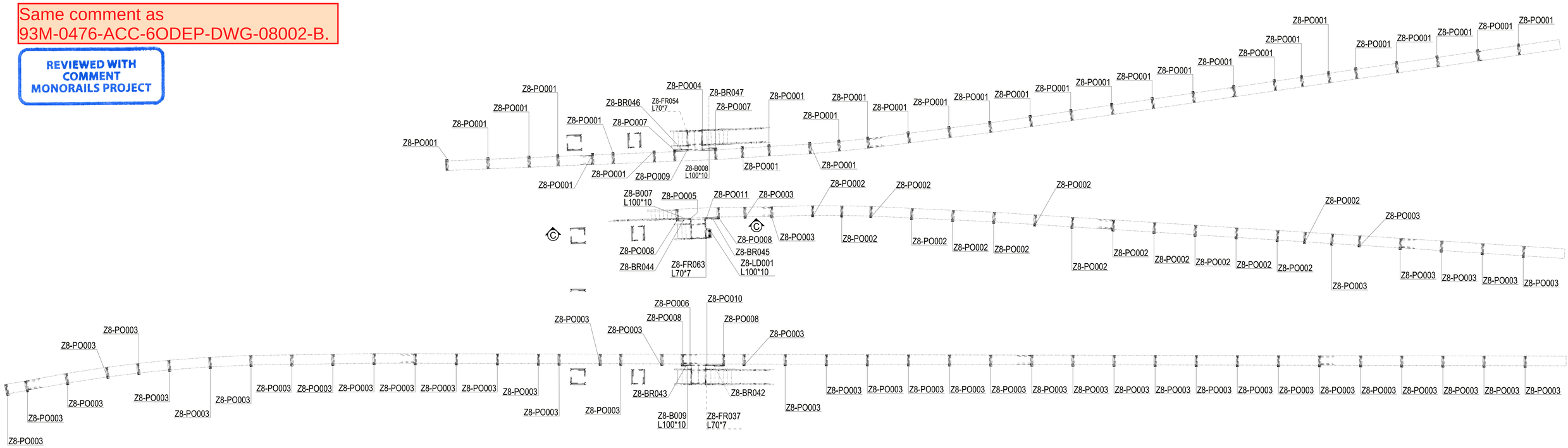

PLAN AT EL+0.350 T.O.G

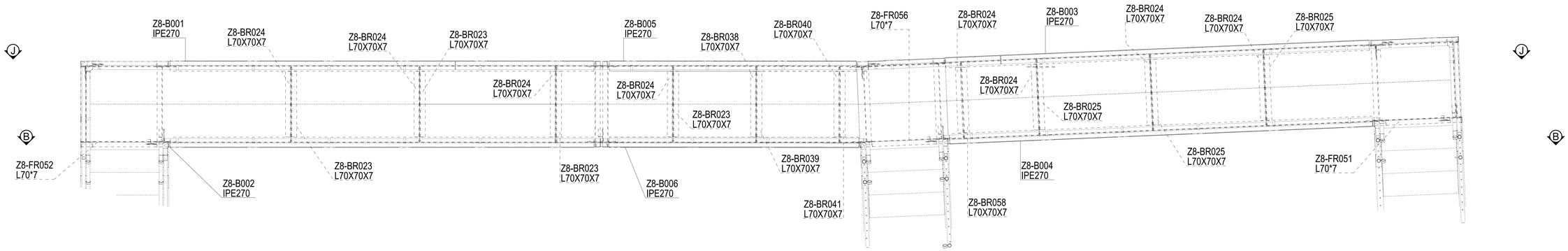

PLAN AT EL+3.900 T.O.G

6 October Monorail
Engineering Unit
Valid For Construction

GENERAL NOTES:

1. THE DIMENSIONS SHOWN ARE NOMINAL (IN MILLIMETERS), U.N.O.
2. WELD SIZESHALL BE AISC MINIMUM OF 6 mm UNLESS NOTED OTHERWISE.
3. ALL FIELD WELDS SHALL BE INSPECTED PER QUALITY ASSURANCE AND SPECIAL INSPECTIONS.

REFERENCE DRAWINGS

1	93M-BOA-NAT-LOT-04833
2	93M-BOA-NAT-LOT-09170
3	93M-BOA-NAT-LOT-01976
4	93M-BOA-NAT-LOT-20021
5	
6	
7	
8	
9	

6TH OF OCTOBER CITY RAIL TRANSIT MONORAIL

The Authority | Hill International Consultant | ORASCOM BOMBARDIER Main Contractor | INNOVA TRANSPORTATION Structural Designer

KEY PLAN:

SCALE	SHOPDRAWING	DATE
AS SHOWN		12/05/2023

REV	DATE	DSG.	CHK.	APP.	AMENDMENTS	STATUS
B	12/05/2023	M.KH	M.KH	DR.M.M	ISSUED FOR INFORMATION	IFI
A	11/20/2022	M.KH	M.KH	DR.M.M	ISSUED FOR INFORMATION	IFI

DRAWING TITLE
6TH OF OCTOBER MONORAIL SERVICE WALKWAY
ZONE (1008)
PLAN AT EL+0.350

Project Code	Rubric	Initiator	Lot	Ref	Number	Revision
9 3 M	0 4 7 6	A C C	6 0 D E P	D W G	0 8 0 0 4	B

Same comment as
93M-0476-ACC-6ODEP-DWG-08002-B.

REVIEWED WITH
COMMENT
MONORAILS PROJECT

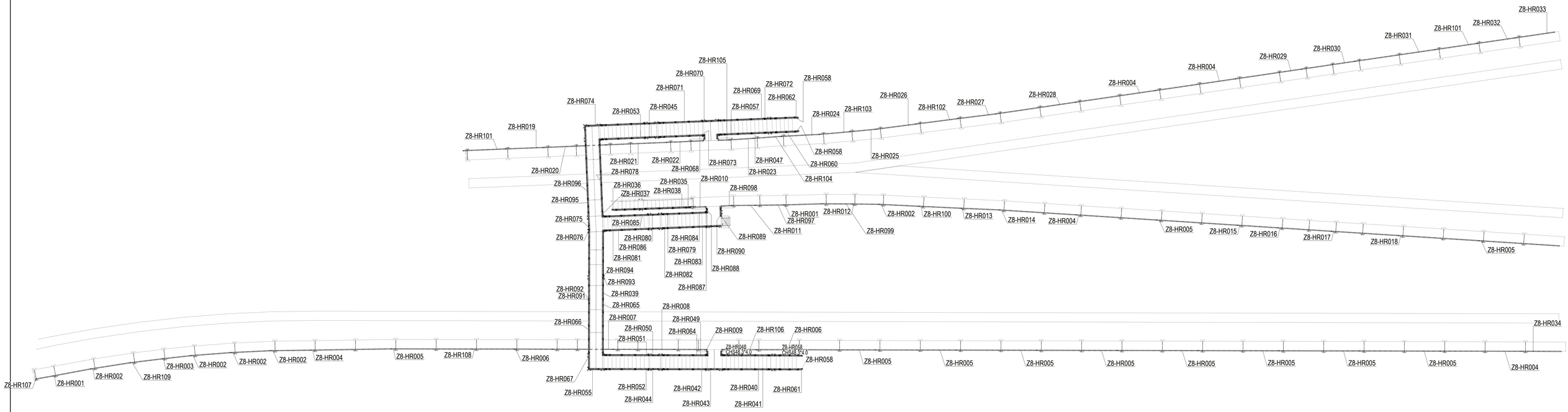

HANDRAIL PLAN

GENERAL NOTES:

1. THE DIMENSIONS SHOWN ARE NOMINAL (IN MILLIMETERS), U.N.O.
2. WELD SIZESHALL BE AISC MINIMUM OF 6 mm UNLESS NOTED OTHERWISE.
3. ALL FIELD WELDS SHALL BE INSPECTED PER QUALITY ASSURANCE AND SPECIAL INSPECTIONS.

REFERENCE DRAWINGS

1	93M-BOA-NAT-LOT-04833
2	93M-BOA-NAT-LOT-09170
3	93M-BOA-NAT-LOT-01976
4	93M-BOA-NAT-LOT-20021
5	
6	
7	
8	
9	

6TH OF OCTOBER CITY RAIL TRANSIT MONORAIL

The Authority | Consultant: Hill International | Main Contractor: ORASCOM CONSTRUCTION / BOMBARDIER | Structural Designer: INNOVA TRANSPORTATION

KEY PLAN:

6 October Monorail
Engineering Unit
Valid For Construction

SCALE	SHOPDRAWING	DATE
AS SHOWN		12/05/2023

REV	DATE	DSG.	CHK.	APP.	AMENDMENTS	STATUS
B	12/05/2023	M.KH	M.KH	DR.M.M	ISSUED FOR INFORMATION	IFI
A	11/20/2022	M.KH	M.KH	DR.M.M	ISSUED FOR INFORMATION	IFI

DRAWING TITLE
6TH OF OCTOBER MONORAIL
SERVICE WALKWAY
ZONE (1008)
HANDRAIL PLAN

Project Code	Rubric	Initiator	Lot	Ref	Number	Revision
93	M047	6ACC	60DEP	DWG	08005	B

Data Structure

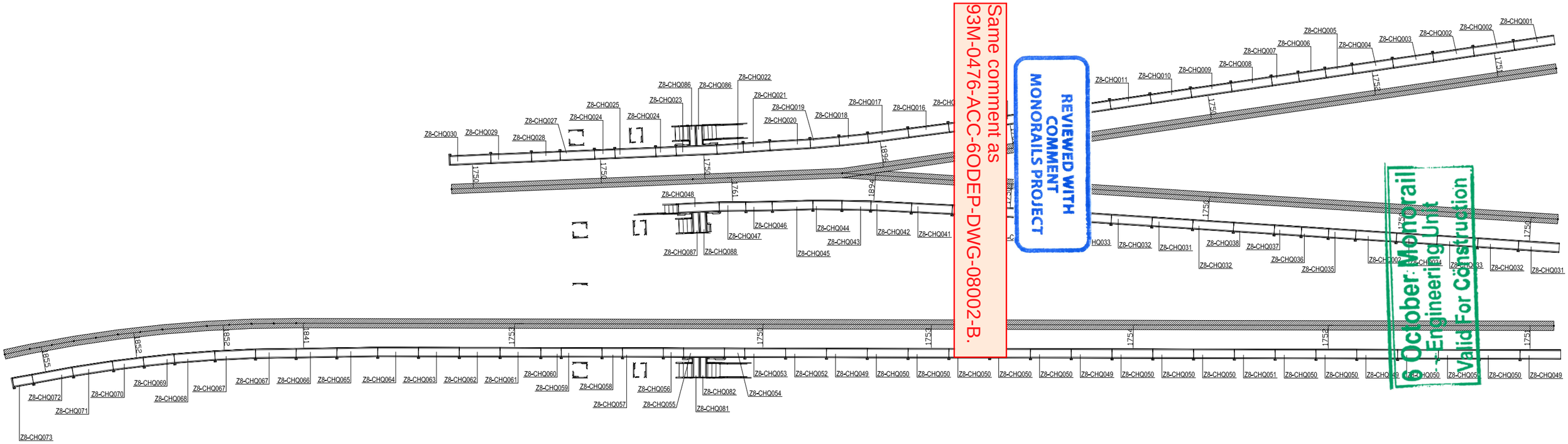

Same comment as 93M-0476-ACC-6ODEP-DWG-08002-B.

REVIEWED WITH COMMENT MONORAILS PROJECT

6 October Monorail Engineering Unit Valid For Construction

CHQ. PLAN AT EL+0.350 T.O.G

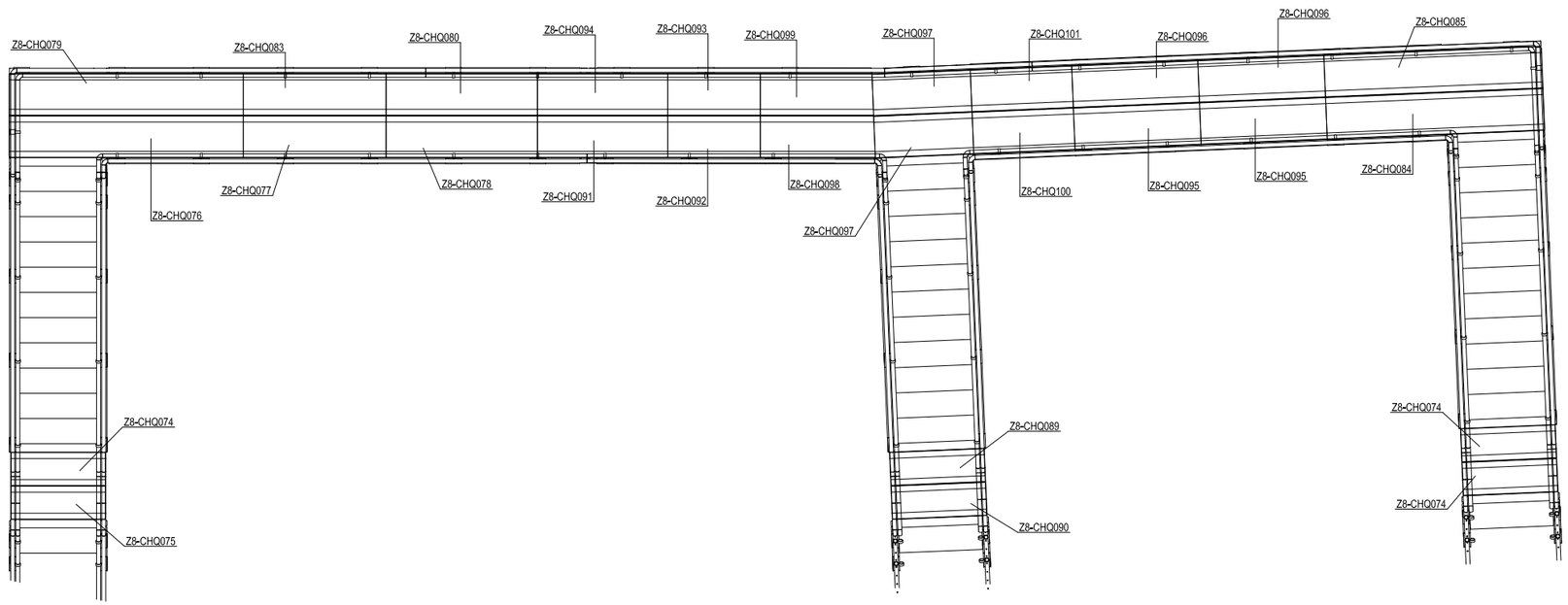

CHQ. PLAN AT EL+3.900 T.O.G

GENERAL NOTES:

1. THE DIMENSIONS SHOWN ARE NOMINAL (IN MILLIMETERS), U.N.O.
2. WELD SIZESHALL BE AISC MINIMUM OF 6 mm UNLESS NOTED OTHERWISE.
3. ALL FIELD WELDS SHALL BE INSPECTED PER QUALITY ASSURANCE AND SPECIAL INSPECTIONS.

REFERENCE DRAWINGS

1	93M-BOA-NAT-LOT-04833
2	93M-BOA-NAT-LOT-09170
3	93M-BOA-NAT-LOT-01976
4	93M-BOA-NAT-LOT-20021
5	
6	
7	
8	
9	

6TH OF OCTOBER CITY RAIL TRANSIT MONORAIL

Hill International

The Authority Consultant | Main Contractor | Structural Designer

KEY PLAN:

SCALE: AS SHOWN | SHOPDRAWING | DATE: 12/05/2023

REV	DATE	DSG.	CHK.	APP.	AMENDMENTS	STATUS
B	12/05/2023	MKH	MKH	DRMM	ISSUED FOR INFORMATION	IFI
A	11/20/2022	MKH	MKH	DRMM	ISSUED FOR INFORMATION	IFI

DRAWING TITLE

6TH OF OCTOBER MONORAIL SERVICE WALKWAY
ZONE (1008)
CHEKERED PLAN

Project Code	Rubric	Initiator	Lot	Ref	Number	Revision
93	M047	6	ACC60	DEP	DWG08006	B

REVIEWED WITH COMMENT
MONORAILS PROJECT

-Connection is not matching with design drawings as shown below.

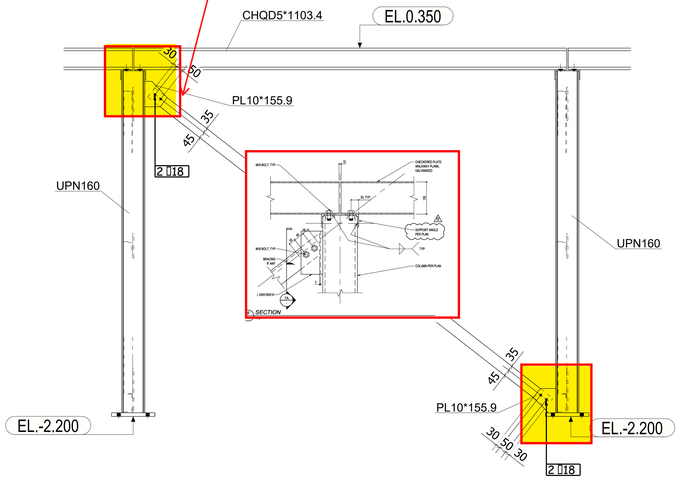

SECTION : A - A
SCALE 1:15

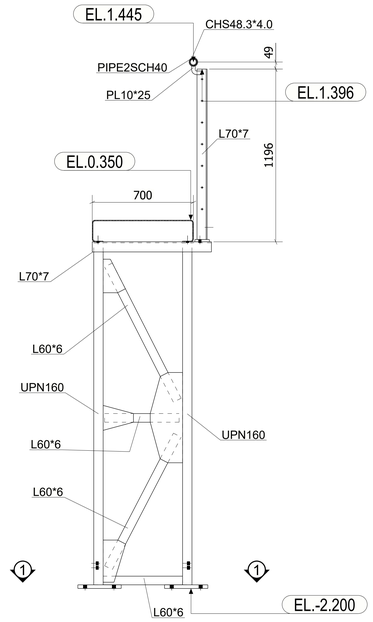

SECTION : B - B
SCALE 1:15

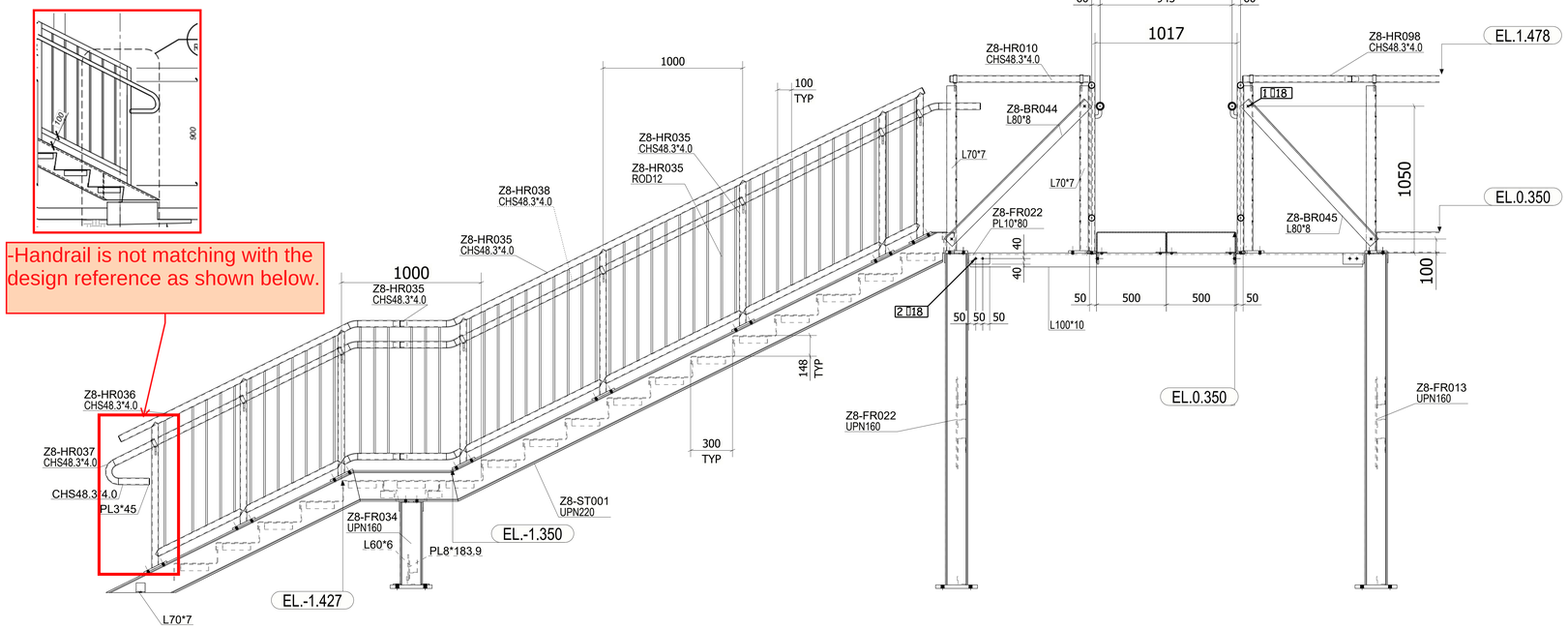

-Handrail is not matching with the design reference as shown below.

SECTION : C - C
SCALE 1:15

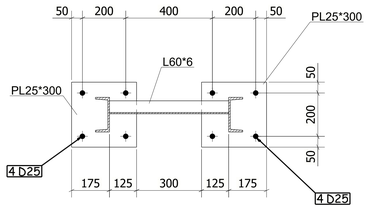

SECTION : 1 - 1
SCALE 1:10

6 October Monorail
Engineering Unit
Valid For Construction

GENERAL NOTES:

1. THE DIMENSIONS SHOWN ARE NOMINAL (IN MILLIMETERS), U.N.O.
2. WELD SIZESHALL BE AISC MINIMUM OF 6 mm UNLESS NOTED OTHERWISE.
3. ALL FIELD WELDS SHALL BE INSPECTED PER QUALITY ASSURANCE AND SPECIAL INSPECTIONS.

REFERENCE DRAWINGS

1	93M-BOA-NAT-LOT-04833
2	93M-BOA-NAT-LOT-09170
3	93M-BOA-NAT-LOT-01976
4	93M-BOA-NAT-LOT-20021
5	
6	
7	
8	
9	

6TH OF OCTOBER CITY RAIL TRANSIT MONORAIL

The Authority | Consultant: Hill International | Main Contractor: ORASCOM / BOMBARDIER | Structural Designer: INNOVA

KEY PLAN:

SCALE	SHOPDRAWING	DATE
AS SHOWN		12/05/2023

REV	DATE	DSG.	CHK.	APP.	AMENDMENTS	STATUS
B	12/05/2023	M.KH	M.KH	DR.M.M	ISSUED FOR INFORMATION	IFI
A	11/20/2022	M.KH	M.KH	DR.M.M	ISSUED FOR INFORMATION	IFI

DRAWING TITLE
6TH OF OCTOBER MONORAIL
SERVICE WALKWAY
ZONE (1008)
SECTIONS (1/5)

Project Code	Rubric	Initiator	Lot	Ref	Number	Revision
9 3	M 0 4 7 6	A C C	6 0 D E P	D W G	0 8 0 0 7	B

4-Highlighted connections are not matching with the design drawings a shown so please send a calculation note for the used connections.

REVIEWED WITH COMMENT MONORAILS PROJECT

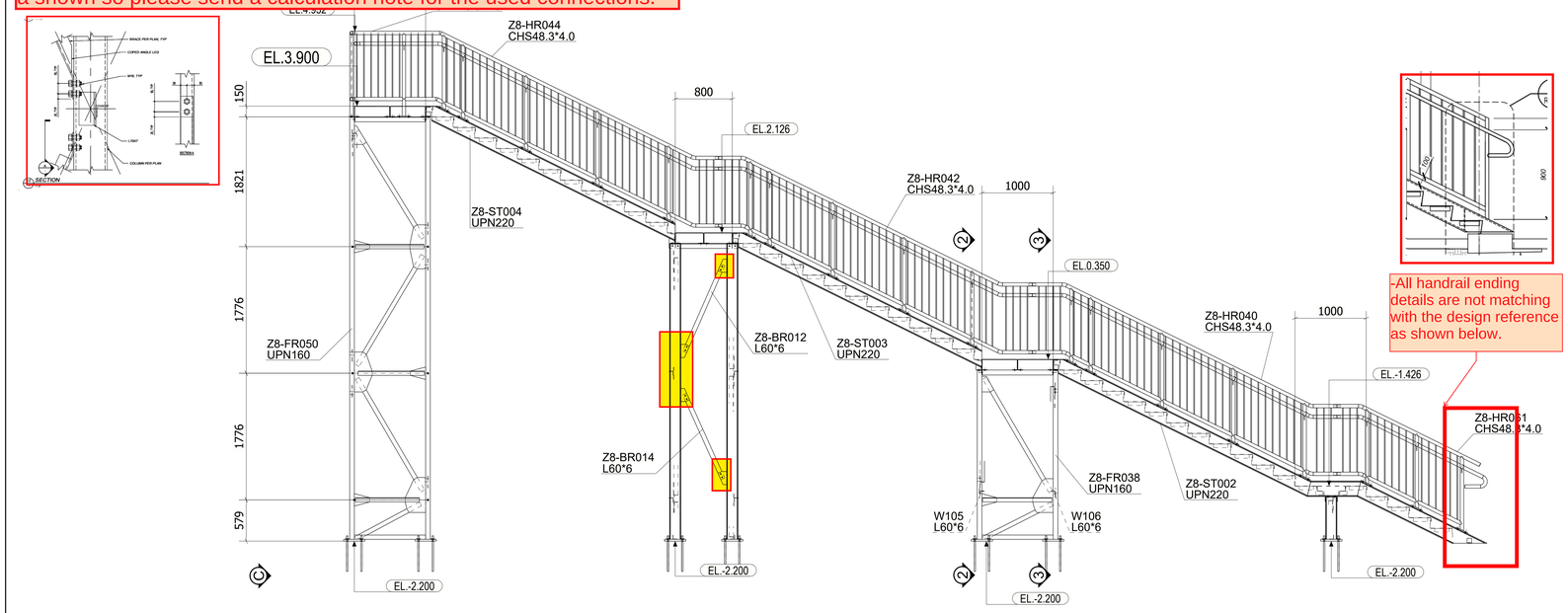

-All handrail ending details are not matching with the design reference as shown below.

SECTION : D - D
SCALE 1:30

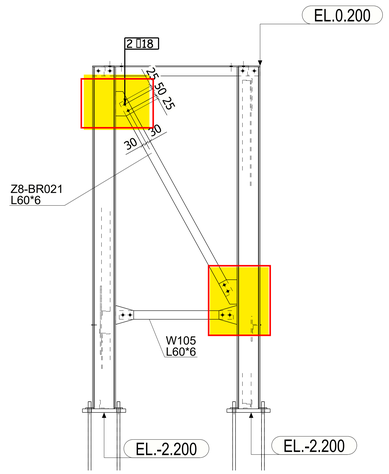

SECTION : 2 - 2
SCALE 1:15

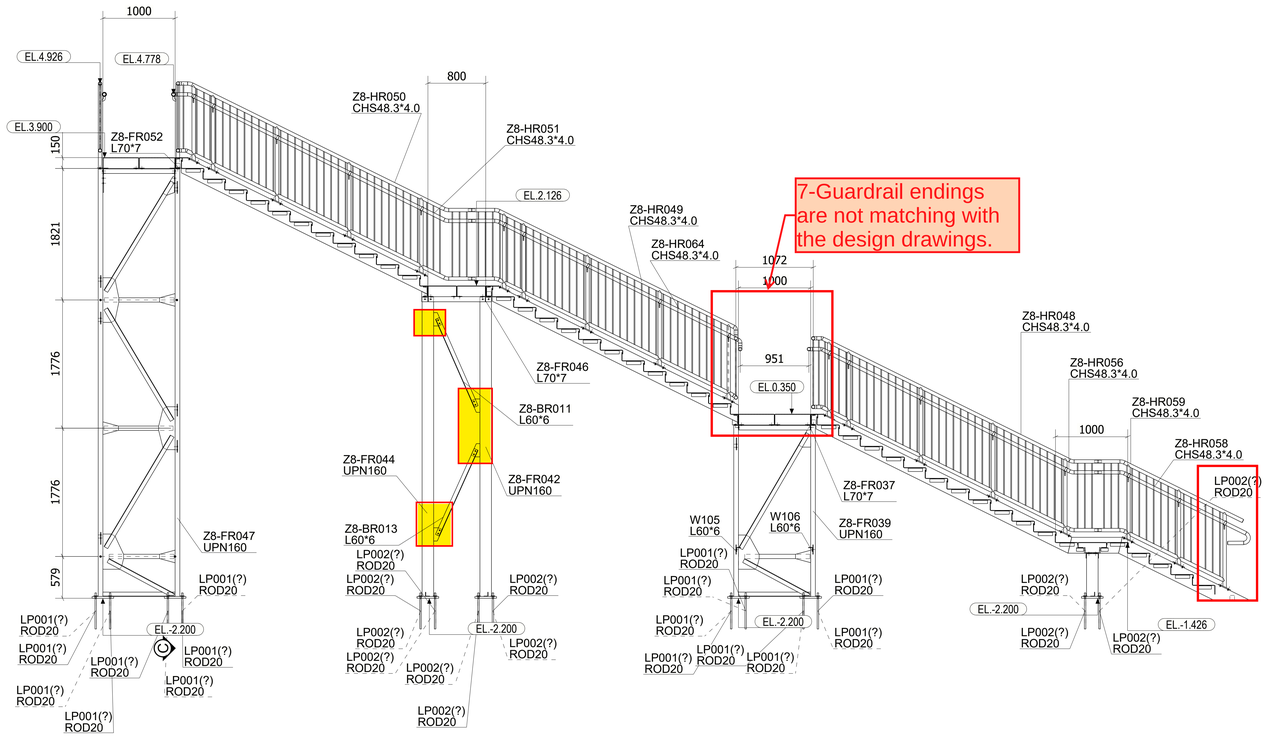

7-Guardrail endings are not matching with the design drawings.

SECTION : E - E
SCALE 1:30

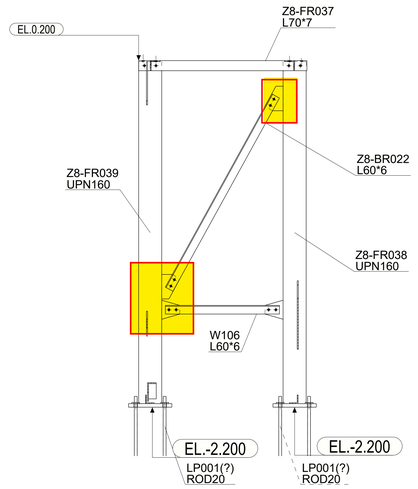

SECTION : 3 - 3
SCALE 1:15

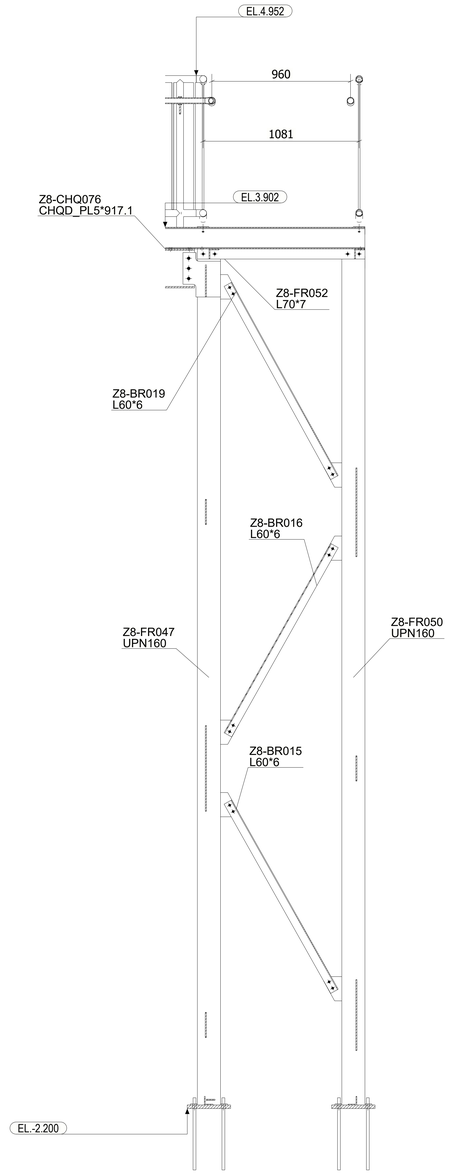

SECTION : C - C
SCALE 1:15

6 October Monorail Engineering Unit
Valid For Construction

GENERAL NOTES:

1. THE DIMENSIONS SHOWN ARE NOMINAL (IN MILLIMETERS), U.N.O.
2. WELD SIZESHALL BE AISC MINIMUM OF 6 mm UNLESS NOTED OTHERWISE.
3. ALL FIELD WELDS SHALL BE INSPECTED PER QUALITY ASSURANCE AND SPECIAL INSPECTIONS.

REFERENCE DRAWINGS

1	93M-BOA-NAT-LOT-04833
2	93M-BOA-NAT-LOT-09170
3	93M-BOA-NAT-LOT-01976
4	93M-BOA-NAT-LOT-20021
5	
6	
7	
8	
9	

6TH OF OCTOBER CITY RAIL TRANSIT MONORAIL

The Authority | Hill International Consultant | ORASCOM BOMBARDIER Main Contractor | INNOVA Structural Designer

KEY PLAN:

SCALE	SHOPDRAWING	DATE
AS SHOWN		12/05/2023

REV	DATE	DSG.	CHK.	APP.	AMENDMENTS	STATUS
B	12/05/2023	M.KH	M.KH	DR.M.M	ISSUED FOR INFORMATION	IFI
A	11/20/2022	M.KH	M.KH	DR.M.M	ISSUED FOR INFORMATION	IFI

DRAWING TITLE
6TH OF OCTOBER MONORAIL SERVICE WALKWAY
ZONE (1008)
SECTIONS (2/5)

Project Code	Rubric	Initiator	Lot	Ref	Number	Revision
93M	0476	ACC	60DEP	DWG	08008	B

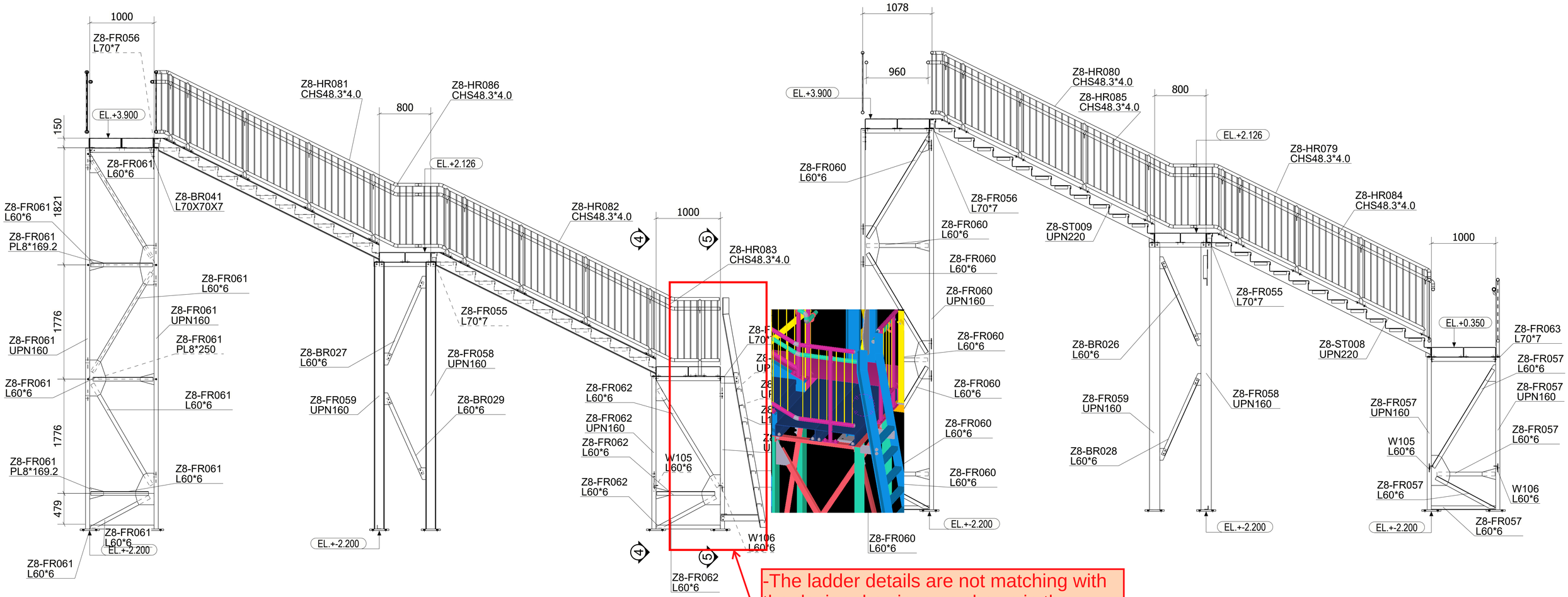

-The ladder details are not matching with the design drawings as shown in the design snap and IFC model snap.

SECTION : F - F
SCALE 1:30

TION : G - G
CALE 1:30

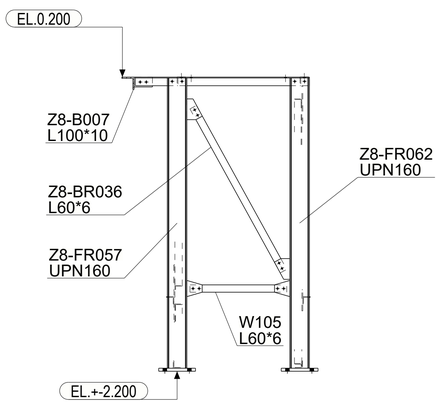

SECTION : 4 - 4
SCALE 1:25

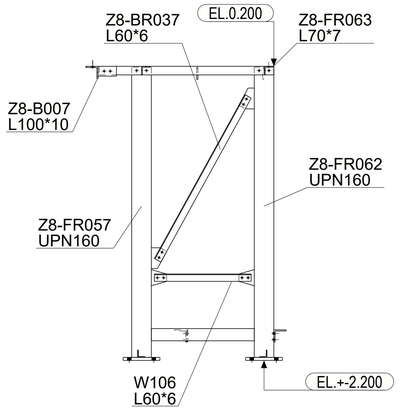

SECTION : 5 - 5
SCALE 1:25

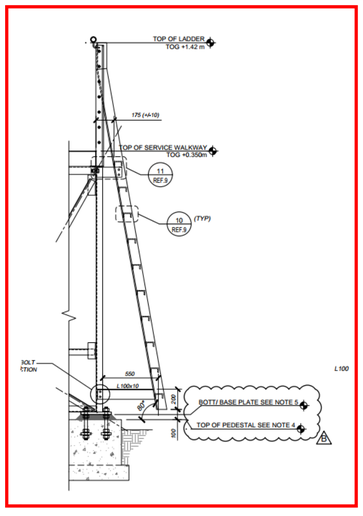

Same comments as 93M-0476-ACC-60DEP-DWG-08008-B.

REVIEWED WITH COMMENT MONORAILS PROJECT

6 October Monorail
Engineering Unit
Valid For Construction

GENERAL NOTES:

1. THE DIMENSIONS SHOWN ARE NOMINAL (IN MILLIMETERS), U.N.O.
2. WELD SIZESHALL BE AISC MINIMUM OF 6 mm UNLESS NOTED OTHERWISE.
3. ALL FIELD WELDS SHALL BE INSPECTED PER QUALITY ASSURANCE AND SPECIAL INSPECTIONS.

REFERENCE DRAWINGS

1	93M-BOA-NAT-LOT-04833
2	93M-BOA-NAT-LOT-09170
3	93M-BOA-NAT-LOT-01976
4	93M-BOA-NAT-LOT-20021
5	
6	
7	
8	
9	

6TH OF OCTOBER CITY RAIL TRANSIT MONORAIL

The Authority | Consultant: Hill International | Main Contractor: ORASCOM / BOMBARDIER | Structural Designer: INNOVA TRANSPORTATION

KEY PLAN:

SCALE	SHOPDRAWING	DATE
AS SHOWN		12/05/2023

REV	DATE	DSG.	CHK.	APP.	AMENDMENTS	STATUS
B	12/05/2023	M.KH	M.KH	DR.M.M	ISSUED FOR INFORMATION	IFI
A	11/20/2022	M.KH	M.KH	DR.M.M	ISSUED FOR INFORMATION	IFI

DRAWING TITLE
6TH OF OCTOBER MONORAIL
SERVICE WALKWAY
ZONE (1008)
SECTIONS (3/5)

Project Code	Rubric	Initiator	Lot	Ref	Number	Revision
93M0476	ACC	60	DEP	DWG	08009	B

Tekla structures

Same comments as 93M-0476-ACC-60DEP-DWG-08008-B.

REVIEWED WITH COMMENT MONORAILS PROJECT

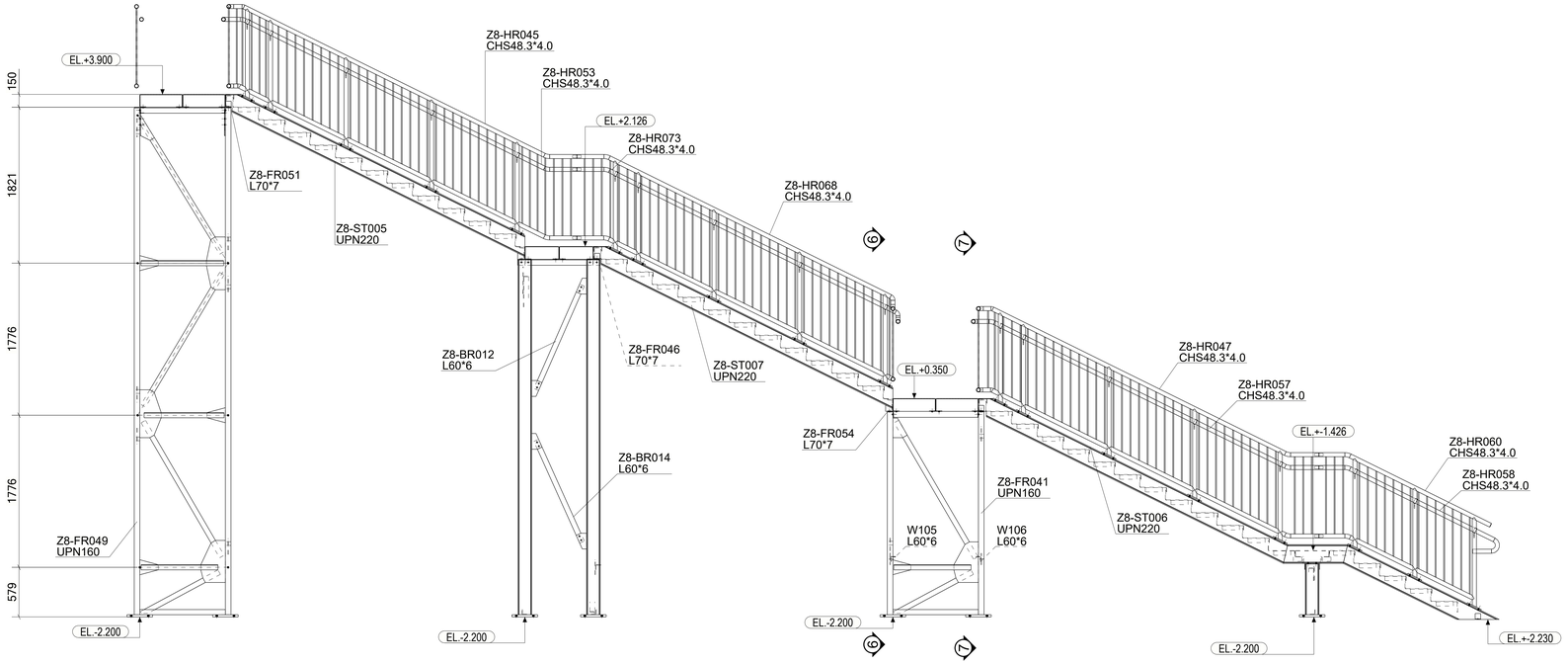

SECTION : H - H
SCALE 1:25

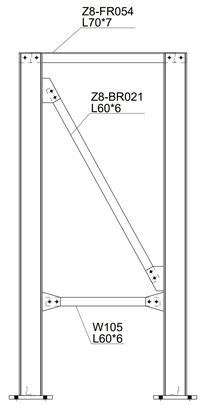

SECTION : 6 - 6
SCALE 1:15

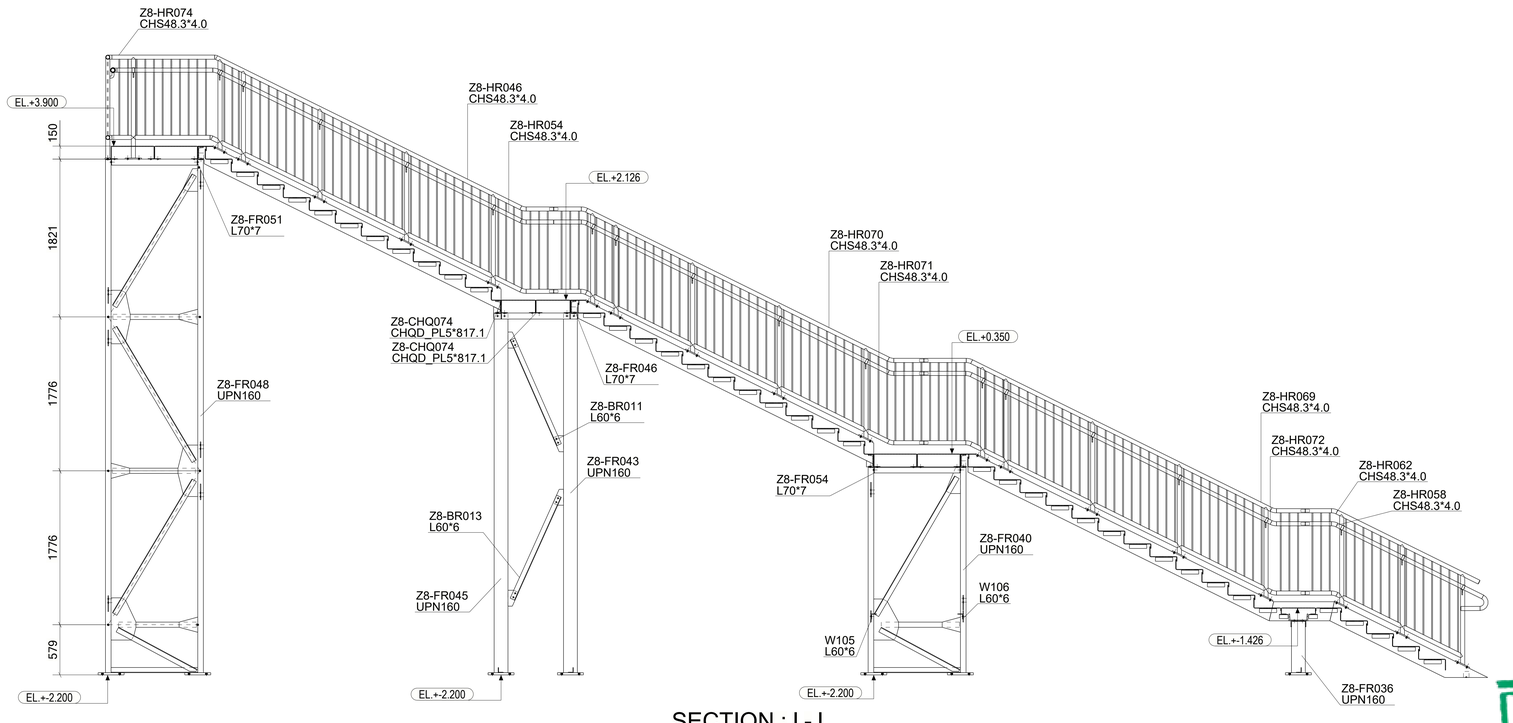

SECTION : I - I
SCALE 1:25

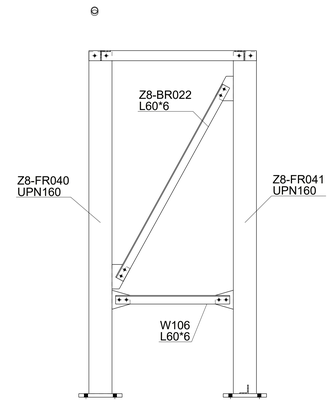

SECTION : 7 - 7
SCALE 1:15

6 October: Monorail
Engineering Unit
Valid For Construction

GENERAL NOTES:

1. THE DIMENSIONS SHOWN ARE NOMINAL (IN MILLIMETERS), U.N.O.
2. WELD SIZESHALL BE AISC MINIMUM OF 6 mm UNLESS NOTED OTHERWISE.
3. ALL FIELD WELDS SHALL BE INSPECTED PER QUALITY ASSURANCE AND SPECIAL INSPECTIONS.

REFERENCE DRAWINGS

1	93M-BOA-NAT-LOT-04833
2	93M-BOA-NAT-LOT-09170
3	93M-BOA-NAT-LOT-01976
4	93M-BOA-NAT-LOT-20021
5	
6	
7	
8	
9	

6TH OF OCTOBER CITY RAIL TRANSIT MONORAIL

The Authority | Consultant: Hill International | Main Contractor: ORASCOM CONSTRUCTION, BOMBARDIER | Structural Designer: INNOVA TRANSPORTATION

KEY PLAN:

SCALE	SHOPDRAWING	DATE
AS SHOWN		12/05/2023

REV	DATE	DSG.	CHK.	APP.	AMENDMENTS	STATUS
B	12/05/2023	M.KH	M.KH	DR.M.M	ISSUED FOR INFORMATION	IFI
A	11/20/2022	M.KH	M.KH	DR.M.M	ISSUED FOR INFORMATION	IFI

DRAWING TITLE
6TH OF OCTOBER MONORAIL
SERVICE WALKWAY
ZONE (1008)
SECTIONS (4/5)

Project Code	Rubric	Initiator	Lot	Ref	Number	Revision
93	M047	6ACC	60DEP	DWG	08010	B

Data structures

REVIEWED WITH COMMENT
MONORAILS PROJECT

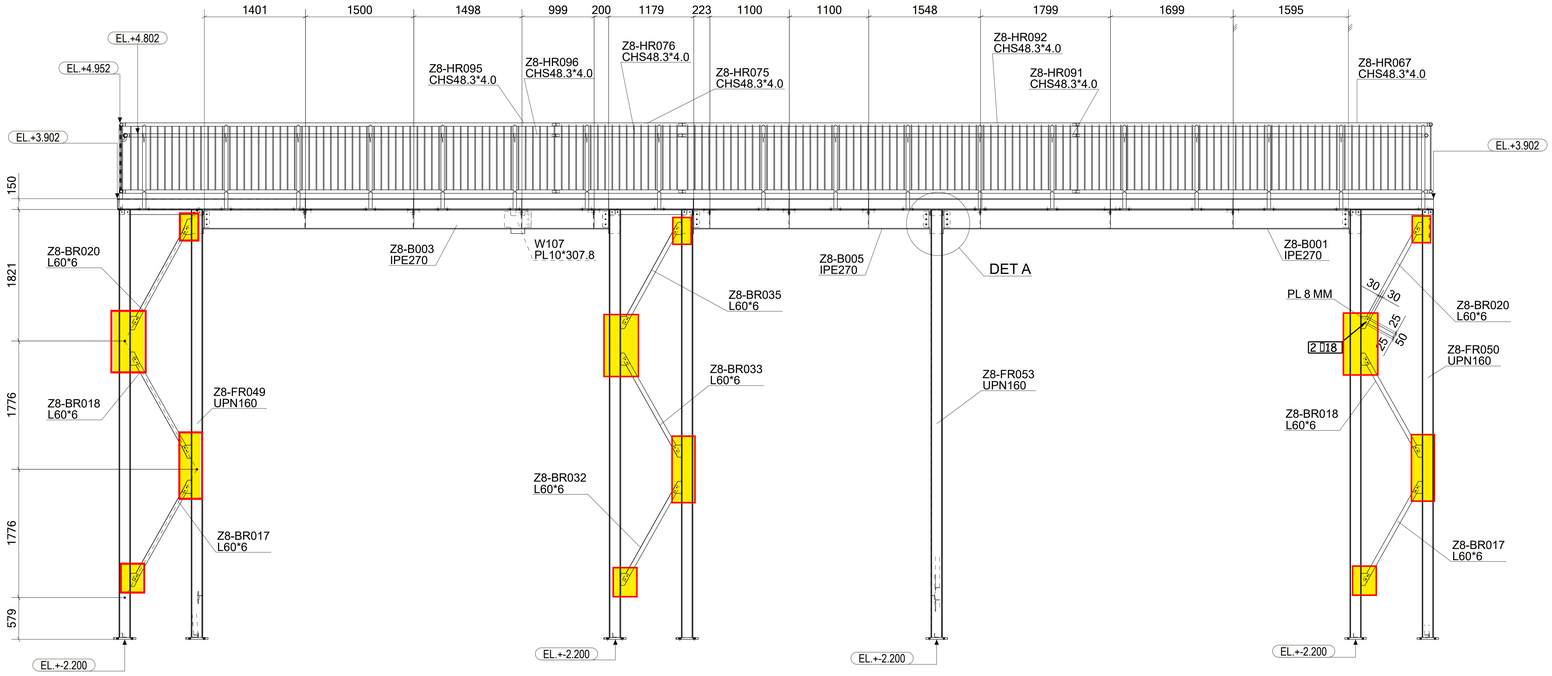

SECTION : J - J
SCALE 1:30

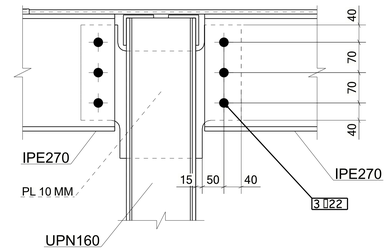

A DETAIL
SCALE 1:5

3-Highlighted connections are not matching with the design drawings a shown so please send a calculation note for the used connections.

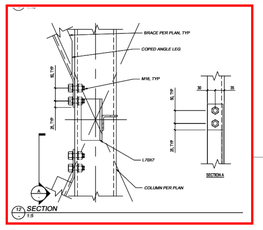

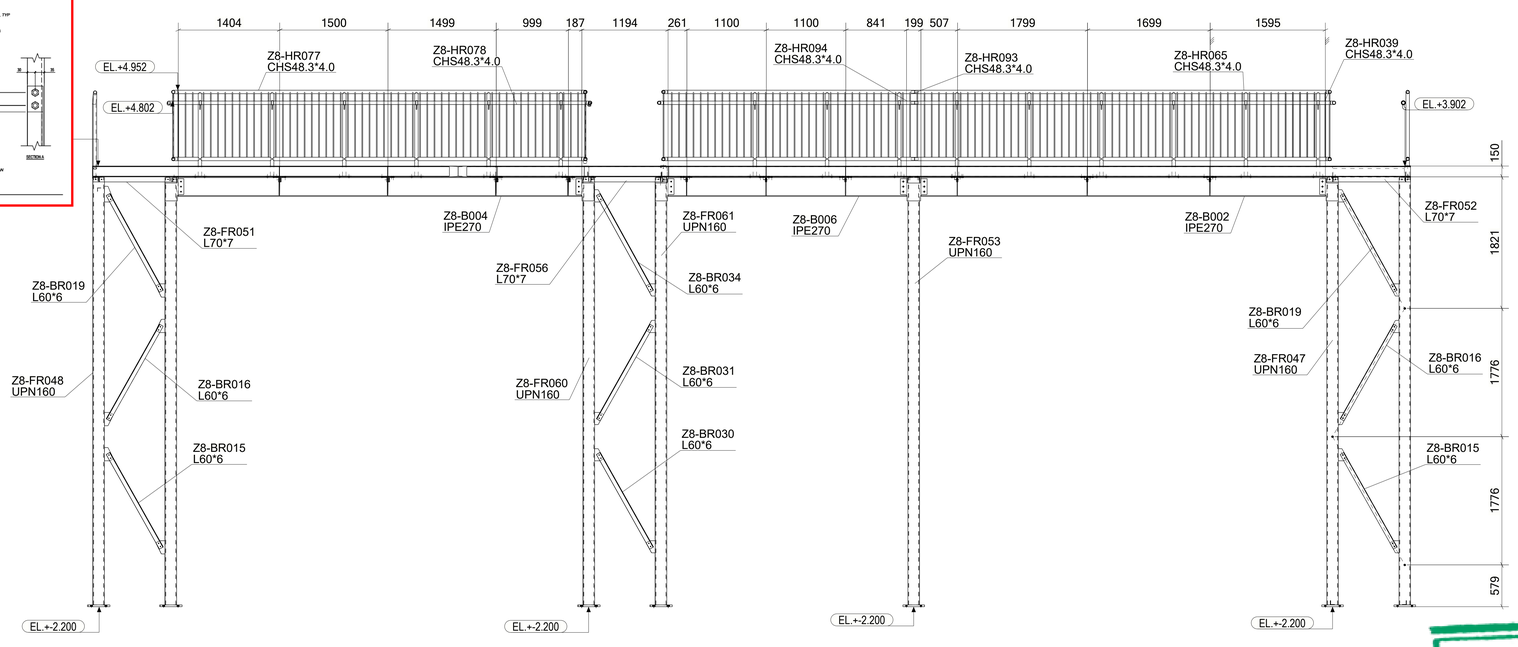

SECTION : B - B
SCALE 1:30

6 October Monorail
Engineering Unit
Valid For Construction

GENERAL NOTES:

1. THE DIMENSIONS SHOWN ARE NOMINAL (IN MILLIMETERS), U.N.O.
2. WELD SIZESHALL BE AISC MINIMUM OF 6 mm UNLESS NOTED OTHERWISE.
3. ALL FIELD WELDS SHALL BE INSPECTED PER QUALITY ASSURANCE AND SPECIAL INSPECTIONS.

REFERENCE DRAWINGS

1	93M-BOA-NAT-LOT-04833
2	93M-BOA-NAT-LOT-09170
3	93M-BOA-NAT-LOT-01976
4	93M-BOA-NAT-LOT-20021
5	
6	
7	
8	
9	

6TH OF OCTOBER CITY RAIL TRANSIT MONORAIL

The Authority — Hill International Consultant — Main Contractor — Structural Designer

KEY PLAN:

SCALE	SHOPDRAWING	DATE
AS SHOWN		12/05/2023

REV	DATE	DSG.	CHK.	APP.	AMENDMENTS	STATUS
B	12/05/2023	M.KH	M.KH	DR.M.M	ISSUED FOR INFORMATION	IFI
A	11/20/2022	M.KH	M.KH	DR.M.M	ISSUED FOR INFORMATION	IFI

DRAWING TITLE
6TH OF OCTOBER MONORAIL
SERVICE WALKWAY
ZONE (1008)
SECTIONS (5/5)

Project Code	Rubric	Initiator	Lot	Ref	Number	Revision
93	M047	6ACC	60DEP	DWG	0801	1 B

Same comments as
93M-0476-ACC-60DEP-DWG-08180-B.

REVIEWED WITH COMMENT
MONORAILS PROJECT

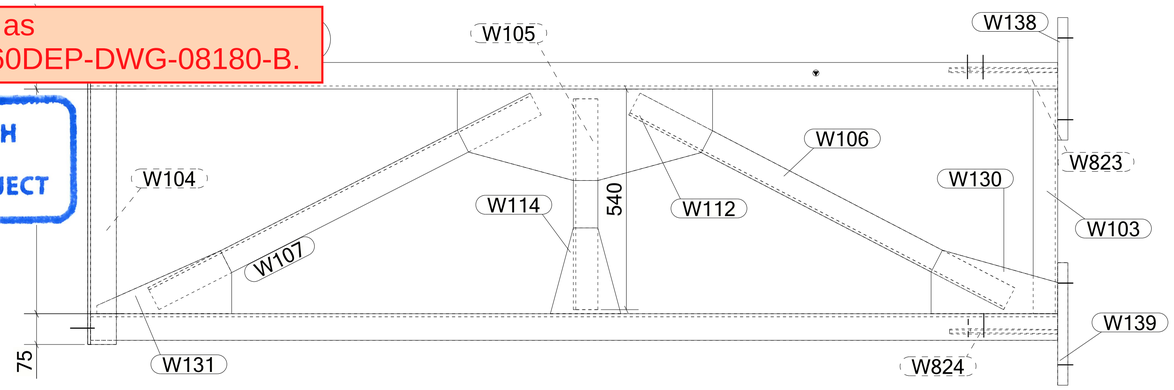

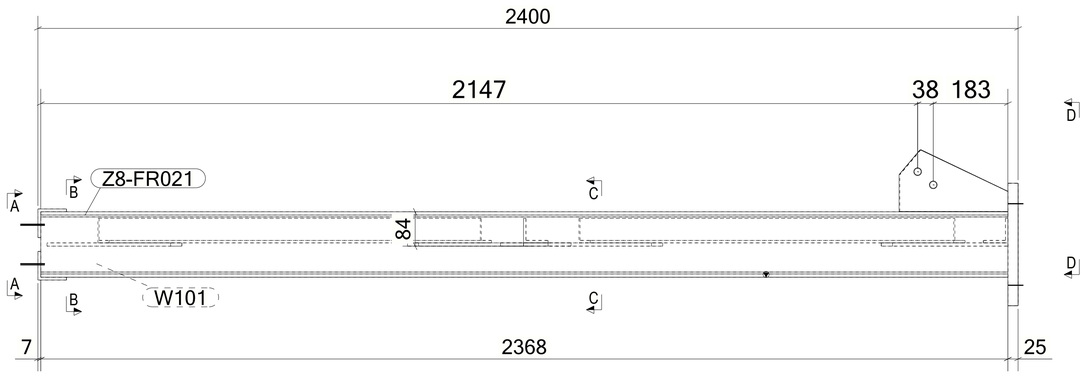

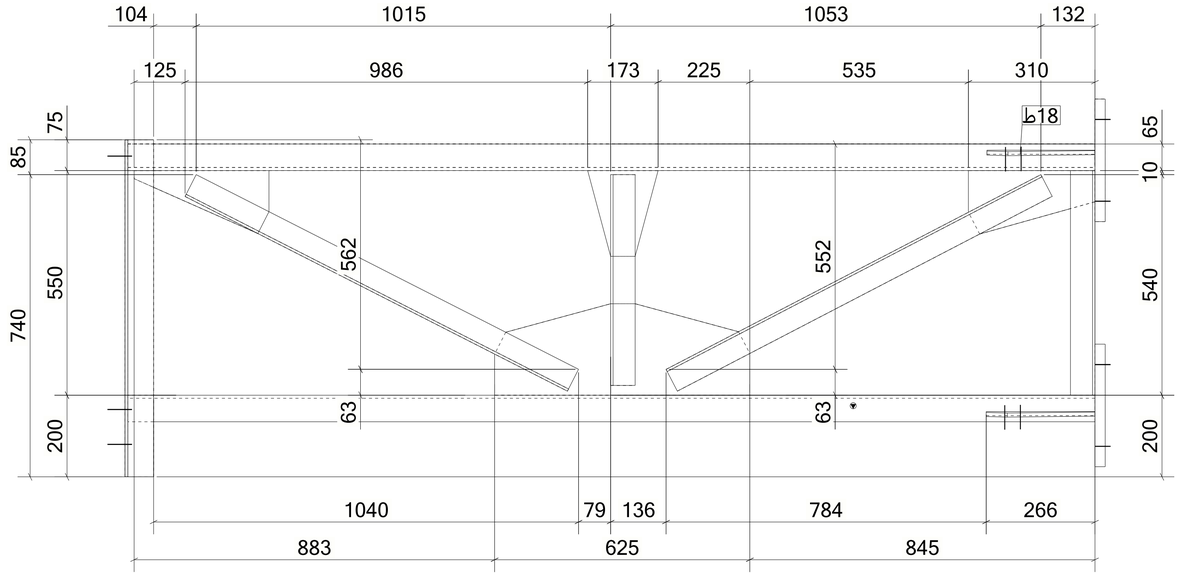

MATERIAL LIST FOR ASSEMBLY MK'D **Z8-FR021**

Mark	Profile	GRADE	No.	Length	Area	Weight
Z8-FR021	UPN160	S235JR	1	2368	1.30	44.61
W101	UPN160	S235JR	1	2368	1.30	44.61
W103	L60*6	S235JR	1	550	0.13	2.95
W104	L70*7	S235JR	1	825	0.23	6.03
W105	L60*6	S235JR	1	516	0.13	2.77
W106	L60*6	S235JR	1	1034	0.25	5.55
W107	L60*6	S235JR	1	1051	0.25	5.64
W111	L70*7	S235JR	1	825	0.23	6.03
W112	PL8*223.9	S355JR	1	625	0.25	7.35
W114	PL8*166.7	S355JR	1	233	0.05	1.53
W130	PL8*155.4	S355JR	1	310	0.08	2.28
W131	PL8*154.2	S355JR	1	330	0.07	1.87
W138	PL25*300	S355JR	1	300	0.21	17.66
W139	PL25*300	S355JR	1	300	0.21	17.66
W823	PL10*151.6	S355JR	1	266	0.06	2.19
W824	PL10*151.6	S355JR	1	265	0.06	2.17
				Total	4.82	170.92

BOLT LIST:-

BOLT \ STUD	BOLT DESCRIPTION	QTY	FINISH

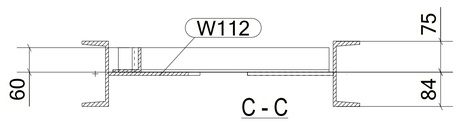

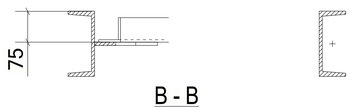

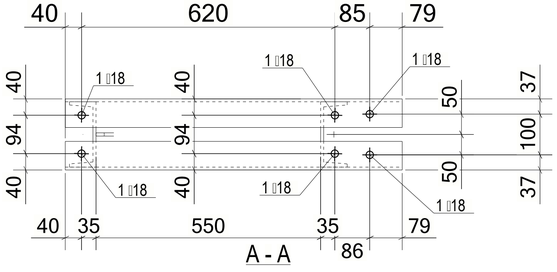

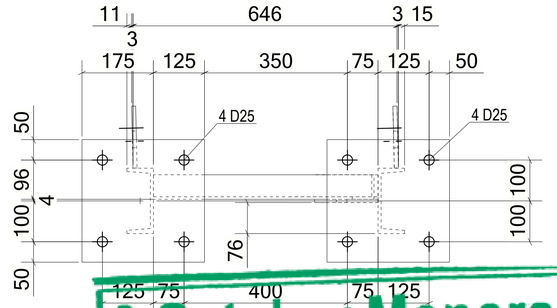

1 *REQUIRED AS DRAWN MARKED* **Z8-FR021**

6 October Monorail
Engineering Unit
Valid For Construction

GENERAL NOTES:

1. THE DIMENSIONS SHOWN ARE NOMINAL (IN MILLIMETERS), U.N.O.
2. WELD SIZESHALL BE AISC MINIMUM OF 6 mm UNLESS NOTED OTHERWISE.
3. ALL FIELD WELDS SHALL BE INSPECTED PER QUALITY ASSURANCE AND SPECIAL INSPECTIONS.

REFERENCE DRAWINGS

1	93M-BOA-NAT-LOT-04833
2	93M-BOA-NAT-LOT-09170
3	93M-BOA-NAT-LOT-01976
4	93M-BOA-NAT-LOT-20021
5	
6	
7	
8	
9	

6TH OF OCTOBER CITY RAIL TRANSIT MONORAIL

The Authority | Consultant: Hill International | Main Contractor: ORASCOM CONSTRUCTION / BOMBARDIER | Structural Designer: INNOVA TRANSPORTATION

KEY PLAN:

SCALE: AS SHOWN | SHOPDRAWING | DATE: 12/05/2022

REV	DATE	DSG.	CHK.	APP.	AMENDMENTS	STATUS
B	12/05/2023	M.KH	M.KH	DR.M.M	ISSUED FOR INFORMATION	IFI
A	11/20/2022	M.KH	M.KH	DR.M.M	ISSUED FOR INFORMATION	IFI

DRAWING TITLE
6TH OF OCTOBER MONORAIL
SERVICE WALKWAYS
ZONE (1008)
Z8-FR021

Project Code	Rubric	Initiator	Lot	Ref	Number	Revision
93	M047	6ACC	60DEP	DWG	08200	B

Tekla structures

Same comments as
93M-0476-ACC-60DEP-DWG-08180-B.

REVIEWED WITH COMMENT
MONORAILS PROJECT

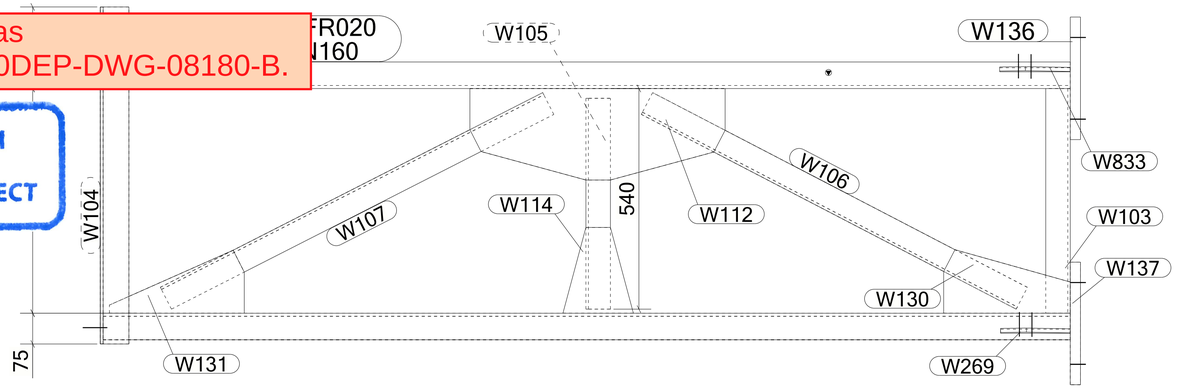

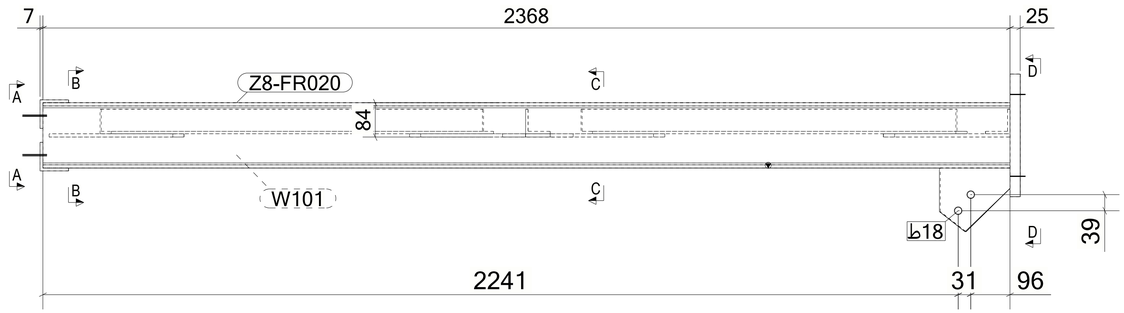

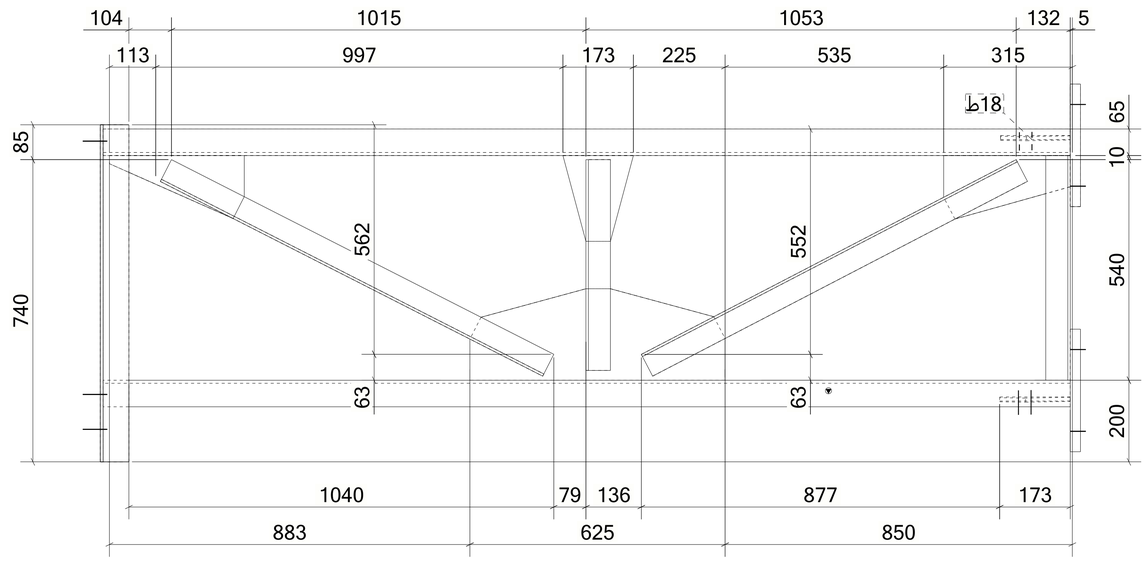

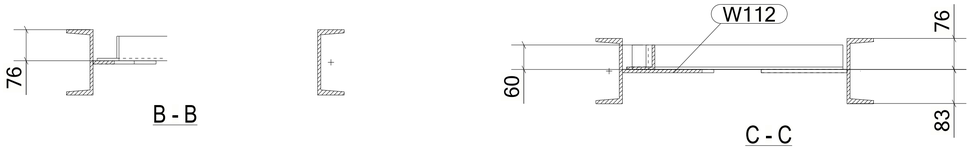

B - B

C - C

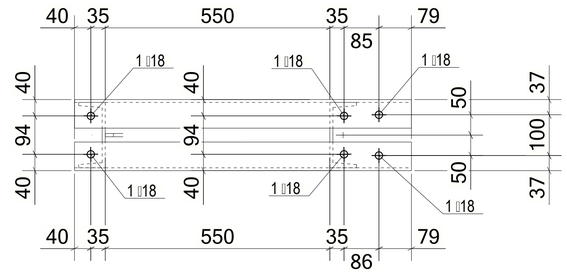

A - A

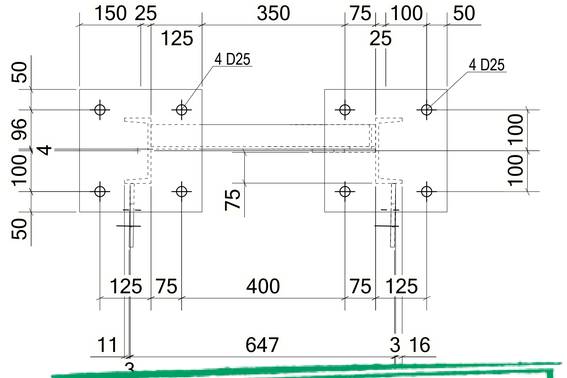

D - D

MATERIAL LIST FOR ASSEMBLY MK'D **Z8-FR020**

Mark	Profile	GRADE	No.	Length	Area	Weight
Z8-FR020	UPN160	S235JR	1	2368	1.30	44.61
W101	UPN160	S235JR	1	2368	1.30	44.61
W103	L60*6	S235JR	1	550	0.13	2.95
W104	L70*7	S235JR	1	825	0.23	6.03
W105	L60*6	S235JR	1	516	0.13	2.77
W106	L60*6	S235JR	1	1034	0.25	5.55
W107	L60*6	S235JR	1	1051	0.25	5.64
W111	L70*7	S235JR	1	825	0.23	6.03
W112	PL8*223.9	S355JR	1	625	0.25	7.35
W114	PL8*166.7	S355JR	1	233	0.05	1.53
W130	PL8*155.4	S355JR	1	310	0.08	2.28
W131	PL8*154.2	S355JR	1	330	0.07	1.87
W136	PL25*300	S355JR	1	300	0.21	17.66
W137	PL25*300	S355JR	1	300	0.21	17.66
W269	PL10*155.9	S355JR	1	171	0.04	1.52
W833	PL10*155.9	S355JR	1	173	0.04	1.54
				Total	4.79	169.62

BOLT LIST:-

BOLT \ STUD	BOLT DESCRIPTION	QTY	FINISH

1 *REQUIRED AS DRAWN MARKED* **Z8-FR020**

6 October Monorail
Engineering Unit
Valid For Construction

GENERAL NOTES:

1. THE DIMENSIONS SHOWN ARE NOMINAL (IN MILLIMETERS), U.N.O.
2. WELD SIZESHALL BE AISC MINIMUM OF 6 mm UNLESS NOTED OTHERWISE.
3. ALL FIELD WELDS SHALL BE INSPECTED PER QUALITY ASSURANCE AND SPECIAL INSPECTIONS.

REFERENCE DRAWINGS

1	93M-BOA-NAT-LOT-04833
2	93M-BOA-NAT-LOT-09170
3	93M-BOA-NAT-LOT-01976
4	93M-BOA-NAT-LOT-20021
5	
6	
7	
8	
9	

6TH OF OCTOBER CITY RAIL TRANSIT MONORAIL

The Authority — Consultant — Main Contractor — Structural Designer

KEY PLAN:

SCALE	SHOPDRAWING	DATE
AS SHOWN		12/05/2023

REV	DATE	DSG.	CHK.	APP.	AMENDMENTS	STATUS
B	12/05/2023	M.KH	M.KH	DR.M.M	ISSUED FOR INFORMATION	IFI
A	11/20/2022	M.KH	M.KH	DR.M.M	ISSUED FOR INFORMATION	IFI

DRAWING TITLE
6TH OF OCTOBER MONORAIL
SERVICE WALKWAYS
ZONE (1008)
Z8-FR020

Project Code	Rubric	Initiator	Lot	Ref	Number	Revision
93M	0476	ACC	60	DEP	DWG-08199	B

Tekla structures

Same comments as 93M-0476-ACC-60DEP-DWG-08180-B.

REVIEWED WITH COMMENT MONORAILS PROJECT

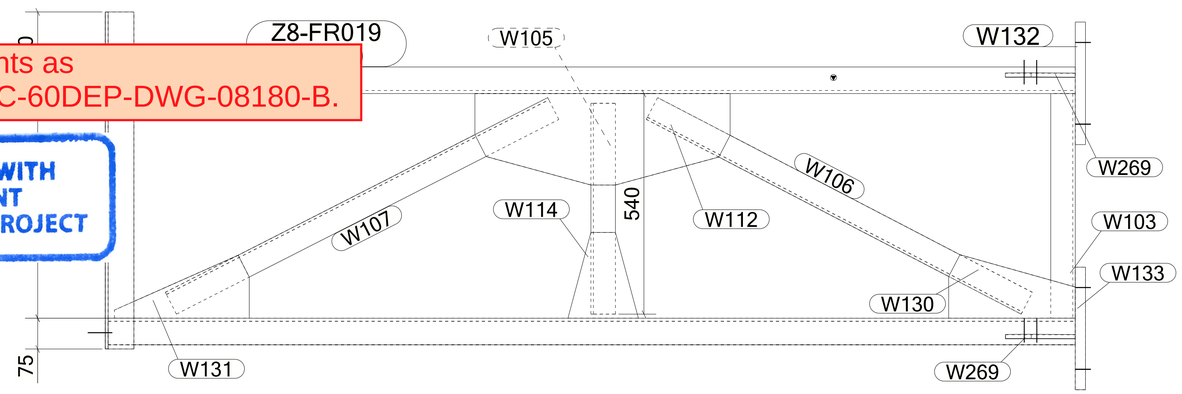

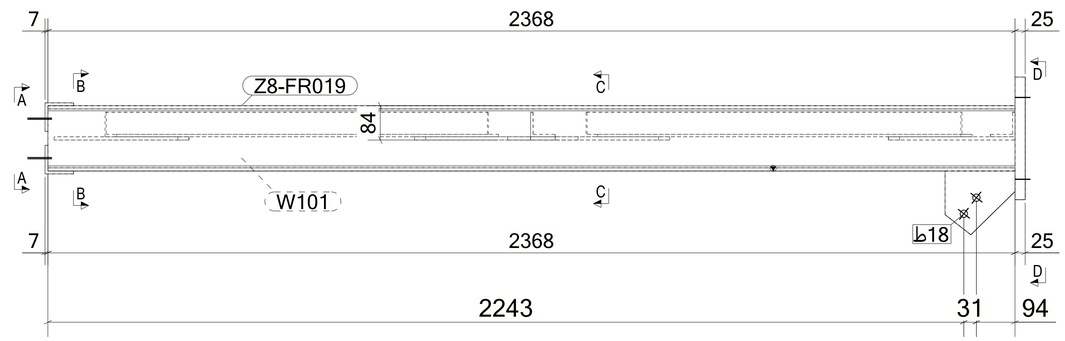

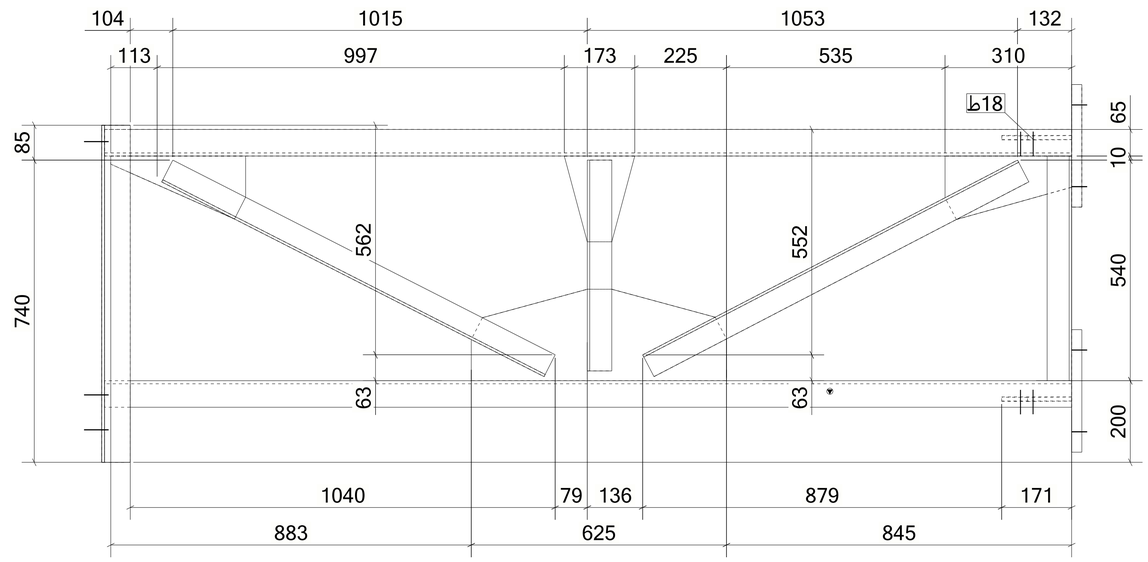

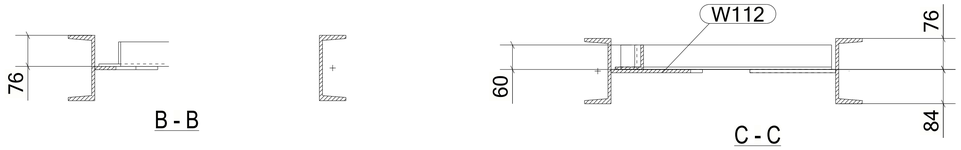

B - B

C - C

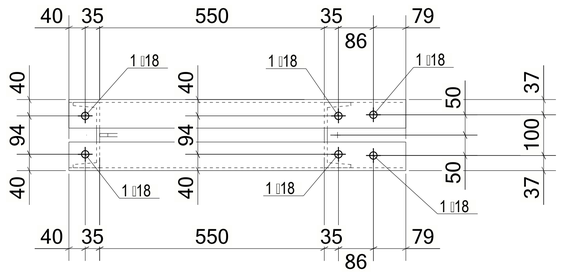

A - A

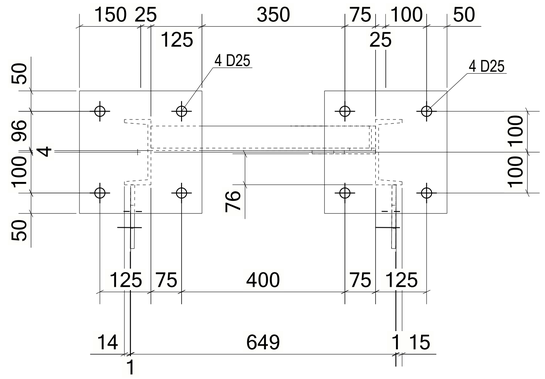

D - D

MATERIAL LIST FOR ASSEMBLY MK'D **Z8-FR019**

Mark	Profile	GRADE	No.	Length	Area	Weight
Z8-FR019	UPN160	S235JR	1	2368	1.30	44.61
W101	UPN160	S235JR	1	2368	1.30	44.61
W103	L60*6	S235JR	1	550	0.13	2.95
W104	L70*7	S235JR	1	825	0.23	6.03
W105	L60*6	S235JR	1	516	0.13	2.77
W106	L60*6	S235JR	1	1034	0.25	5.55
W107	L60*6	S235JR	1	1051	0.25	5.64
W111	L70*7	S235JR	1	825	0.23	6.03
W112	PL8*223.9	S355JR	1	625	0.25	7.35
W114	PL8*166.7	S355JR	1	233	0.05	1.53
W130	PL8*155.4	S355JR	1	310	0.08	2.28
W131	PL8*154.2	S355JR	1	330	0.07	1.87
W132	PL25*300	S355JR	1	300	0.21	17.66
W133	PL25*300	S355JR	1	300	0.21	17.66
W269	PL10*155.9	S355JR	2	171	0.04	1.52
				Total	4.79	169.61

BOLT LIST:-

BOLT \ STUD	BOLT DESCRIPTION	QTY	FINISH

1 *REQUIRED AS DRAWN MARKED* **Z8-FR019**

GENERAL NOTES:

1. THE DIMENSIONS SHOWN ARE NOMINAL (IN MILLIMETERS), U.N.O.
2. WELD SIZESHALL BE AISC MINIMUM OF 6 mm UNLESS NOTED OTHERWISE.
3. ALL FIELD WELDS SHALL BE INSPECTED PER QUALITY ASSURANCE AND SPECIAL INSPECTIONS.

REFERENCE DRAWINGS

1	93M-BOA-NAT-LOT-04833
2	93M-BOA-NAT-LOT-09170
3	93M-BOA-NAT-LOT-01976
4	93M-BOA-NAT-LOT-20021
5	
6	
7	
8	
9	

6TH OF OCTOBER CITY RAIL TRANSIT MONORAIL

The Authority | Consultant: Hill International | Main Contractor: ORASCOM CONSTRUCTION / BOMBARDIER | Structural Designer: INNOVA TRANSPORTATION

KEY PLAN:

REV	DATE	DSG.	CHK.	APP.	AMENDMENTS	STATUS
B	12/05/2023	M.KH	M.KH	DR.M.M	ISSUED FOR INFORMATION	IFI
A	11/20/2022	M.KH	M.KH	DR.M.M	ISSUED FOR INFORMATION	IFI

6 October Monorail Engineering Unit
Valid For Construction

SCALE: AS SHOWN | SHOPDRAWING | DATE: 12/05/2023

DRAWING TITLE
6TH OF OCTOBER MONORAIL
SERVICE WALKWAYS
ZONE (1008)
Z8-FR019

Project Code	Rubric	Initiator	Lot	Ref	Number	Revision
93M	047	6ACC	60DEP	DWG	08198	B

Tekla structures

Same comments as 93M-0476-ACC-60DEP-DWG-08180-B.

REVIEWED WITH COMMENT MONORAILS PROJECT

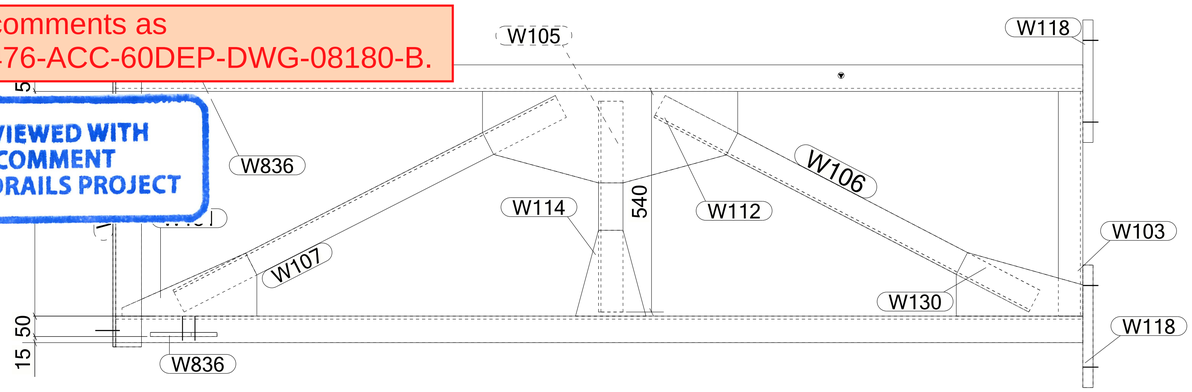

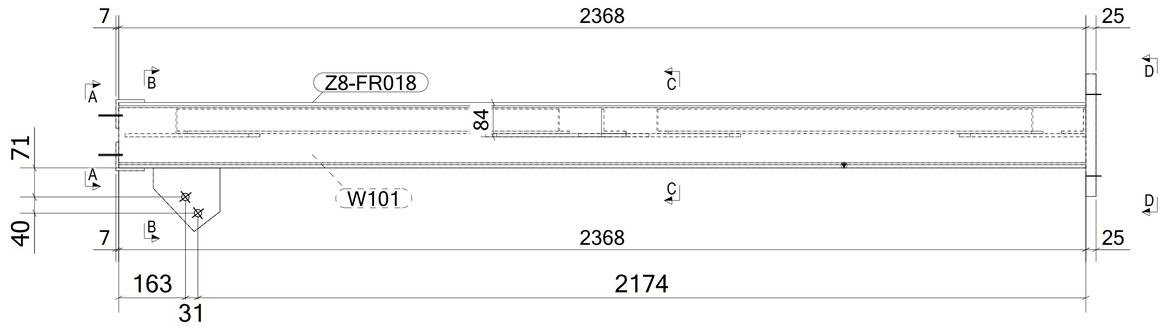

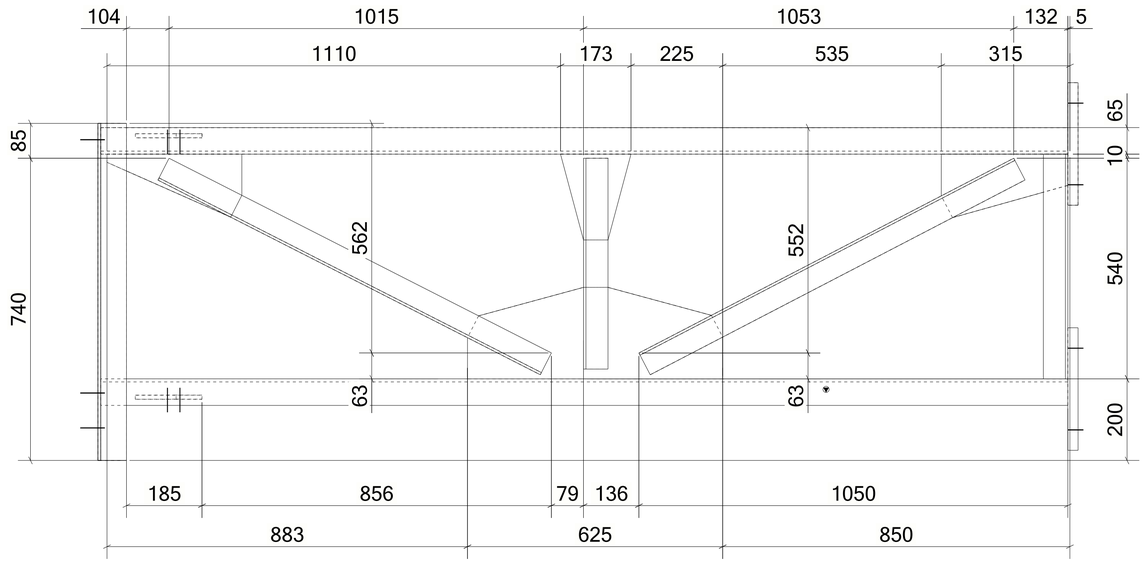

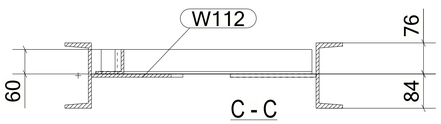

C - C

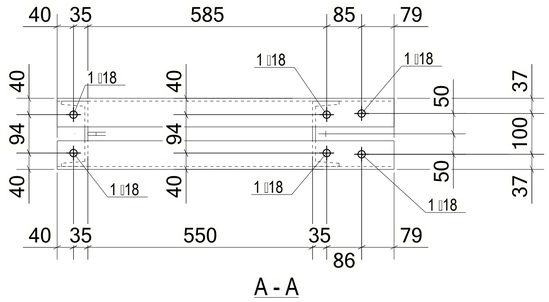

A - A

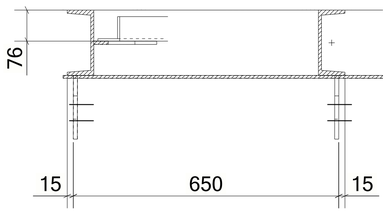

B - B

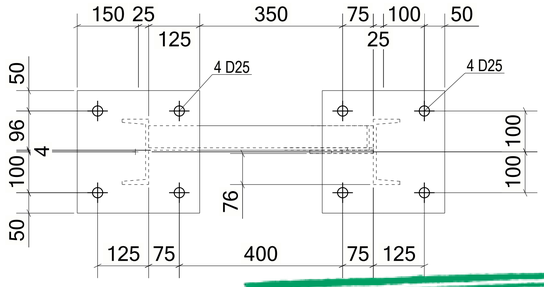

D - D

MATERIAL LIST FOR ASSEMBLY MK'D **Z8-FR018**						
Mark	Profile	GRADE	No.	Length	Area	Weight
Z8-FR018	UPN160	S235JR	1	2368	1.30	44.61
W101	UPN160	S235JR	1	2368	1.30	44.61
W103	L60*6	S235JR	1	550	0.13	2.95
W104	L70*7	S235JR	1	825	0.23	6.03
W105	L60*6	S235JR	1	516	0.13	2.77
W106	L60*6	S235JR	1	1034	0.25	5.55
W107	L60*6	S235JR	1	1051	0.25	5.64
W111	L70*7	S235JR	1	825	0.23	6.03
W112	PL8*223.9	S355JR	1	625	0.25	7.35
W114	PL8*166.7	S355JR	1	233	0.05	1.53
W118	PL25*300	S355JR	2	300	0.21	17.66
W130	PL8*155.4	S355JR	1	310	0.08	2.28
W131	PL8*154.2	S355JR	1	330	0.07	1.87
W836	PL10*156	S355JR	2	163	0.04	1.46
				Total	4.78	169.49

BOLT LIST:-

BOLT \ STUD	BOLT DESCRIPTION	QTY	FINISH

1 *REQUIRED AS DRAWN MARKED* **Z8-FR018**

GENERAL NOTES:

1. THE DIMENSIONS SHOWN ARE NOMINAL (IN MILLIMETERS), U.N.O.
2. WELD SIZESHALL BE AISC MINIMUM OF 6 mm UNLESS NOTED OTHERWISE.
3. ALL FIELD WELDS SHALL BE INSPECTED PER QUALITY ASSURANCE AND SPECIAL INSPECTIONS.

REFERENCE DRAWINGS

1	93M-BOA-NAT-LOT-04833
2	93M-BOA-NAT-LOT-09170
3	93M-BOA-NAT-LOT-01976
4	93M-BOA-NAT-LOT-20021
5	
6	
7	
8	
9	

6TH OF OCTOBER CITY RAIL TRANSIT MONORAIL

The Authority | Consultant: Hill International | Main Contractor: ORASCOM / BOMBARDIER | Structural Designer: INNOVA TRANSPORTATION

KEY PLAN:

6 October Monorail Engineering Unit Valid For Construction

SCALE	SHOPDRAWING	DATE
AS SHOWN		12/05/2023

REV	DATE	DSG.	CHK.	APP.	AMENDMENTS	STATUS
B	12/05/2023	M.KH	M.KH	DR.M.M	ISSUED FOR INFORMATION	IFI
A	11/20/2022	M.KH	M.KH	DR.M.M	ISSUED FOR INFORMATION	IFI

DRAWING TITLE
6TH OF OCTOBER MONORAIL
SERVICE WALKWAYS
ZONE (1008)
Z8-FR018

Project Code	Rubric	Initiator	Lot	Ref	Number	Revision
93	M047	6ACC	60DE	PDWG	08197	B

Tekla structures

Same comments as
93M-0476-ACC-60DEP-DWG-08180-B.

REVIEWED WITH COMMENT
MONORAILS PROJECT

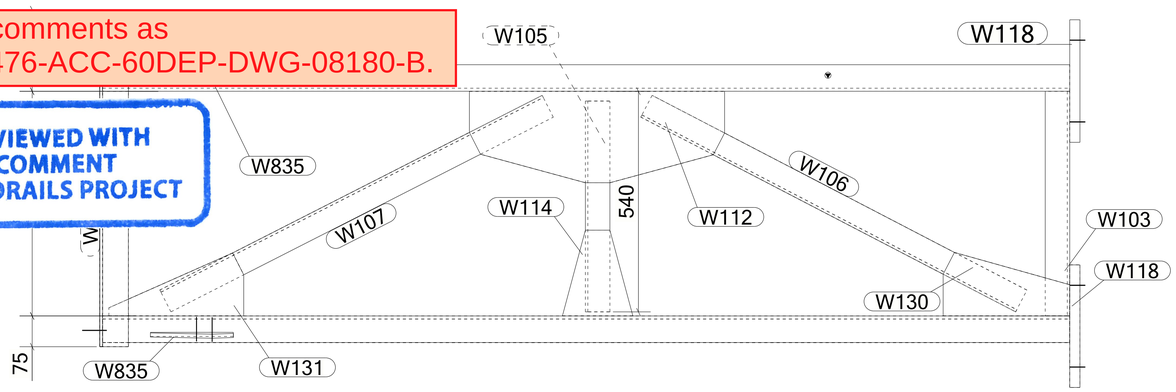

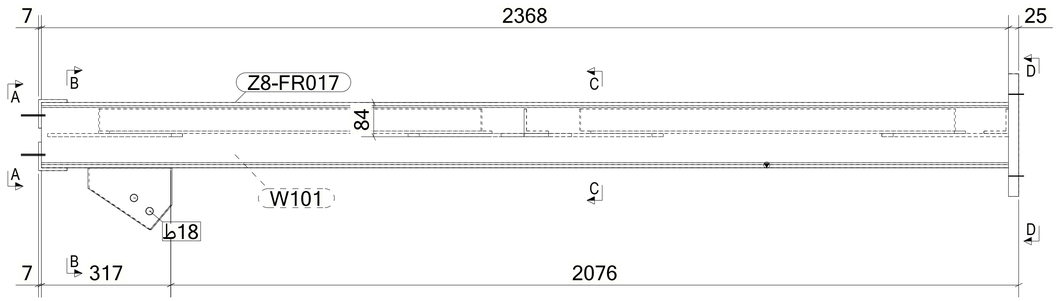

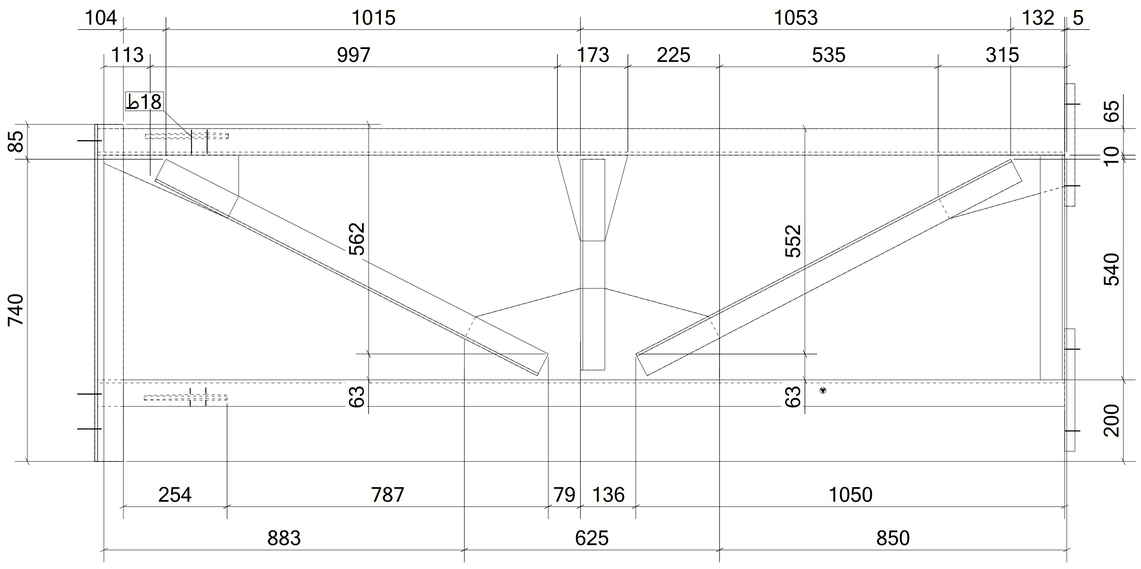

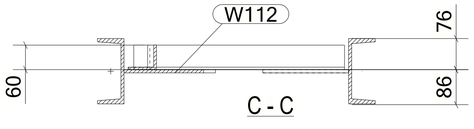

C - C

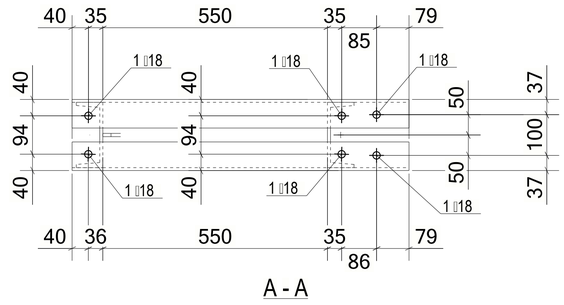

A - A

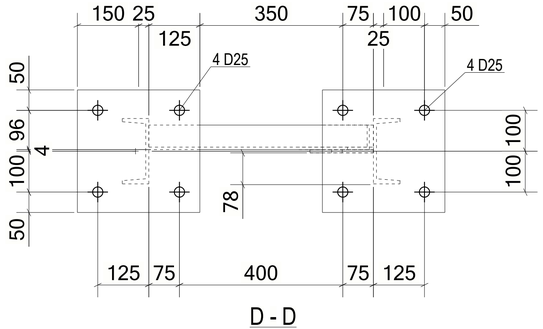

D - D

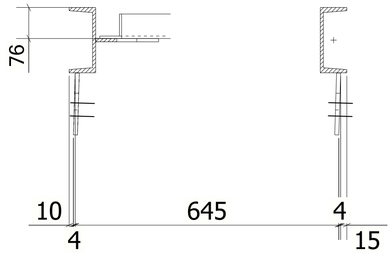

B - B

MATERIAL LIST FOR ASSEMBLY MK'D **Z8-FR017**

Mark	Profile	GRADE	No.	Length	Area	Weight
Z8-FR017	UPN160	S235JR	1	2368	1.30	44.61
W101	UPN160	S235JR	1	2368	1.30	44.61
W103	L60*6	S235JR	1	550	0.13	2.95
W104	L70*7	S235JR	1	825	0.23	6.03
W105	L60*6	S235JR	1	516	0.13	2.77
W106	L60*6	S235JR	1	1034	0.25	5.55
W107	L60*6	S235JR	1	1051	0.25	5.64
W111	L70*7	S235JR	1	825	0.23	6.03
W112	PL8*223.9	S355JR	1	625	0.25	7.35
W114	PL8*166.7	S355JR	1	233	0.05	1.53
W118	PL25*300	S355JR	2	300	0.21	17.66
W130	PL8*155.4	S355JR	1	310	0.08	2.28
W131	PL8*154.2	S355JR	1	330	0.07	1.87
W835	PL10*151.5	S355JR	2	203	0.05	1.68
				Total	4.80	169.93

BOLT LIST:-

BOLT \ STUD	BOLT DESCRIPTION	QTY	FINISH

1 *REQUIRED AS DRAWN MARKED* **Z8-FR017**

GENERAL NOTES:

1. THE DIMENSIONS SHOWN ARE NOMINAL (IN MILLIMETERS), U.N.O.
2. WELD SIZESHALL BE AISC MINIMUM OF 6 mm UNLESS NOTED OTHERWISE.
3. ALL FIELD WELDS SHALL BE INSPECTED PER QUALITY ASSURANCE AND SPECIAL INSPECTIONS.

REFERENCE DRAWINGS

1	93M-BOA-NAT-LOT-04833
2	93M-BOA-NAT-LOT-09170
3	93M-BOA-NAT-LOT-01976
4	93M-BOA-NAT-LOT-20021
5	
6	
7	
8	
9	

6TH OF OCTOBER CITY RAIL TRANSIT MONORAIL

The Authority — Hill International Consultant — Main Contractor — Structural Designer

KEY PLAN:

6 October Monorail
Engineering Unit
Valid For Construction

REV	DATE	DSG.	CHK.	APP.	AMENDMENTS	STATUS
B	12/05/2023	M.KH	M.KH	DR.M.M	ISSUED FOR INFORMATION	IFI
A	11/20/2022	M.KH	M.KH	DR.M.M	ISSUED FOR INFORMATION	IFI

SCALE: AS SHOWN | SHOPDRAWING | DATE: 12/05/2023

DRAWING TITLE
6TH OF OCTOBER MONORAIL
SERVICE WALKWAYS
ZONE (1008)
Z8-FR017

Project Code	Rubric	Initiator	Lot	Ref	Number	Revision
93M	0476	ACC	60	DEP	DWG-08196	B

Tekla structures

Same comments as
93M-0476-ACC-60DEP-DWG-08180-B.

REVIEWED WITH COMMENT
MONORAILS PROJECT

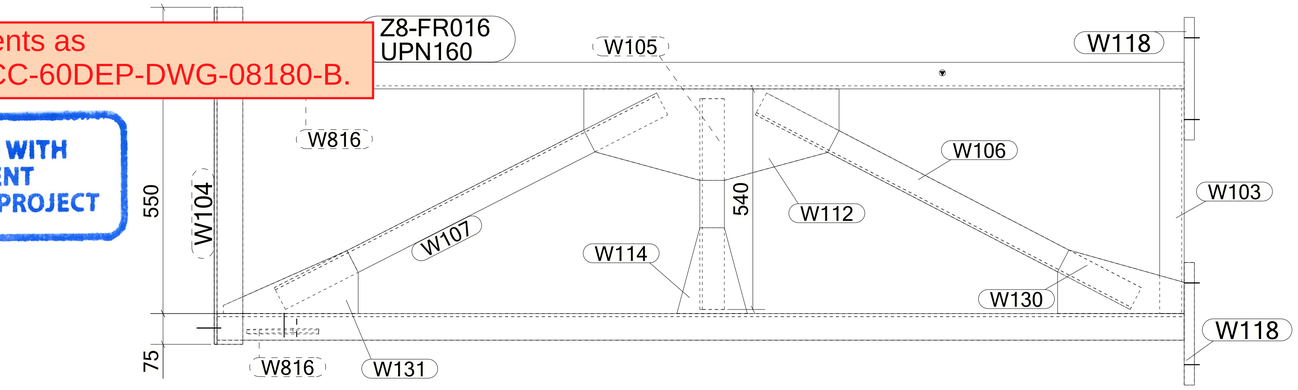

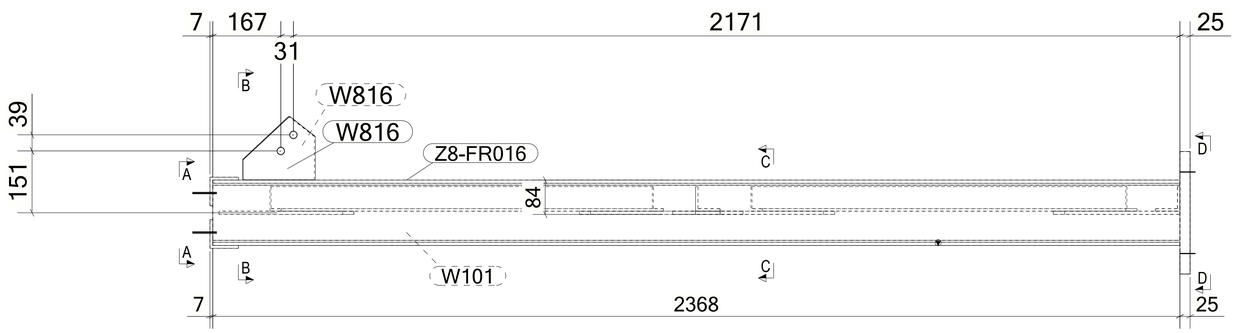

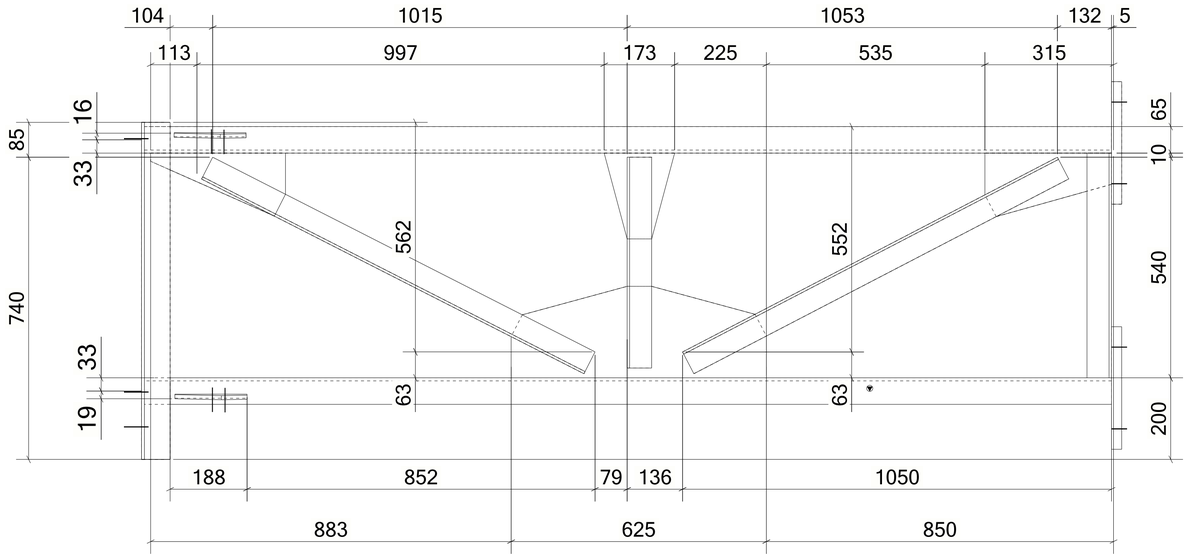

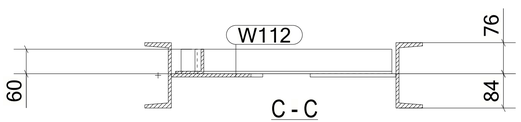

C - C

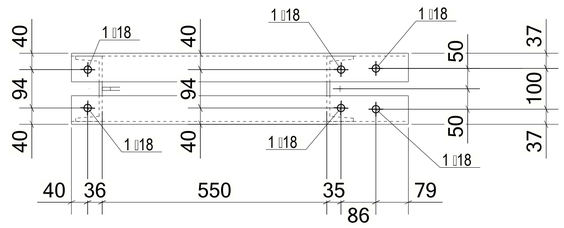

A - A

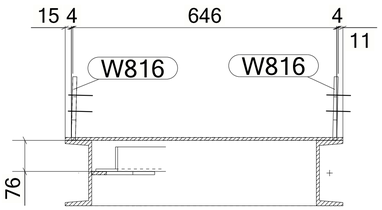

B - B

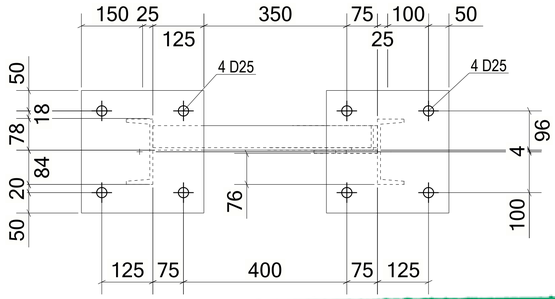

D - D

MATERIAL LIST FOR ASSEMBLY MK'D **Z8-FR016**

Mark	Profile	GRADE	No.	Length	Area	Weight
Z8-FR016	UPN160	S235JR	1	2368	1.30	44.61
W101	UPN160	S235JR	1	2368	1.30	44.61
W103	L60*6	S235JR	1	550	0.13	2.95
W104	L70*7	S235JR	1	825	0.23	6.03
W105	L60*6	S235JR	1	516	0.13	2.77
W106	L60*6	S235JR	1	1034	0.25	5.55
W107	L60*6	S235JR	1	1051	0.25	5.64
W111	L70*7	S235JR	1	825	0.23	6.03
W112	PL8*223.9	S355JR	1	625	0.25	7.35
W114	PL8*166.7	S355JR	1	233	0.05	1.53
W118	PL25*300	S355JR	2	300	0.21	17.66
W130	PL8*155.4	S355JR	1	310	0.08	2.28
W131	PL8*154.2	S355JR	1	330	0.07	1.87
W816	PL10*155.4	S355JR	2	177	0.05	1.56
				Total	4.79	169.68

BOLT LIST:-

BOLT \ STUD	BOLT DESCRIPTION	QTY	FINISH

1 *REQUIRED AS DRAWN MARKED* **Z8-FR016**

6 October Monorail
Engineering Unit
Valid For Construction

GENERAL NOTES:

1. THE DIMENSIONS SHOWN ARE NOMINAL (IN MILLIMETERS), U.N.O.
2. WELD SIZESHALL BE AISC MINIMUM OF 6 mm UNLESS NOTED OTHERWISE.
3. ALL FIELD WELDS SHALL BE INSPECTED PER QUALITY ASSURANCE AND SPECIAL INSPECTIONS.

REFERENCE DRAWINGS

1	93M-BOA-NAT-LOT-04833
2	93M-BOA-NAT-LOT-09170
3	93M-BOA-NAT-LOT-01976
4	93M-BOA-NAT-LOT-20021
5	
6	
7	
8	
9	

6TH OF OCTOBER CITY RAIL TRANSIT MONORAIL

The Authority — Hill International (Consultant) — Main Contractor — Structural Designer

KEY PLAN:

SCALE	SHOPDRAWING	DATE
AS SHOWN		12/05/2023

REV	DATE	DSG.	CHK.	APP.	AMENDMENTS	STATUS
B	12/05/2023	M.KH	M.KH	DR.M.M	ISSUED FOR INFORMATION	IFI
A	11/20/2022	M.KH	M.KH	DR.M.M	ISSUED FOR INFORMATION	IFI

DRAWING TITLE
6TH OF OCTOBER MONORAIL
SERVICE WALKWAYS
ZONE (1008)
Z8-FR016

Project Code	Rubric	Initiator	Lot	Ref	Number	Revision
93	M047	6ACC	60DE	PDWG	08195	B

Tekla structures

Same comments as 93M-0476-ACC-60DEP-DWG-08180-B.

REVIEWED WITH COMMENT MONORAILS PROJECT

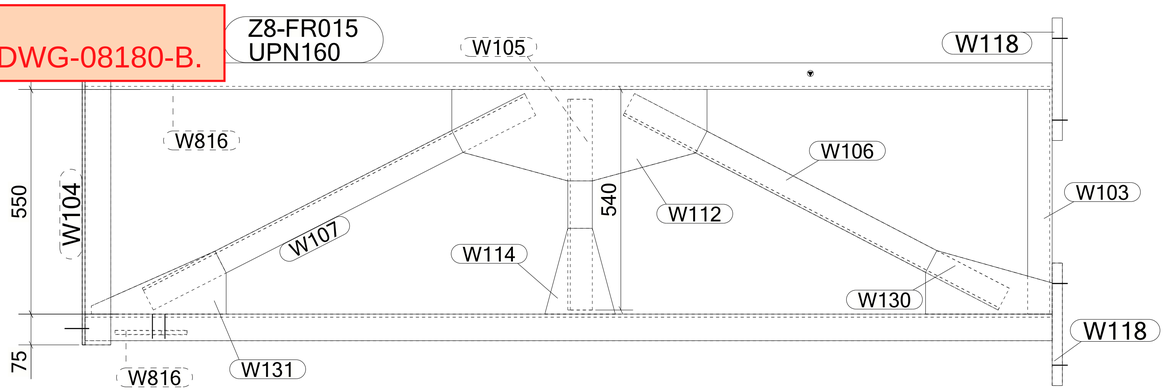

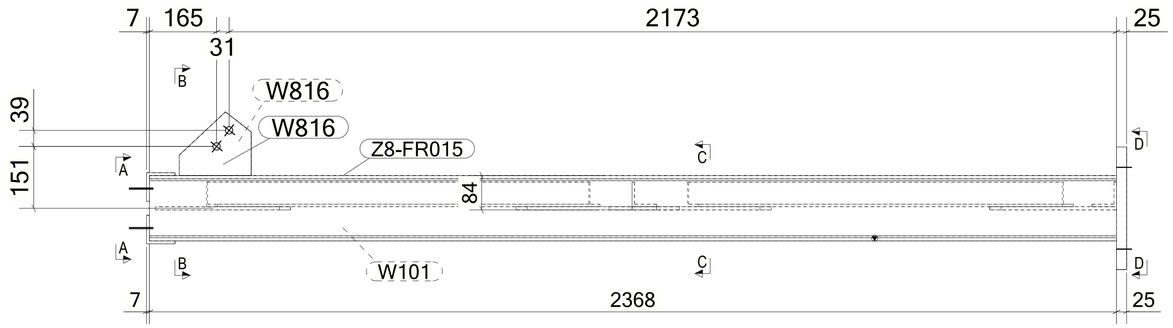

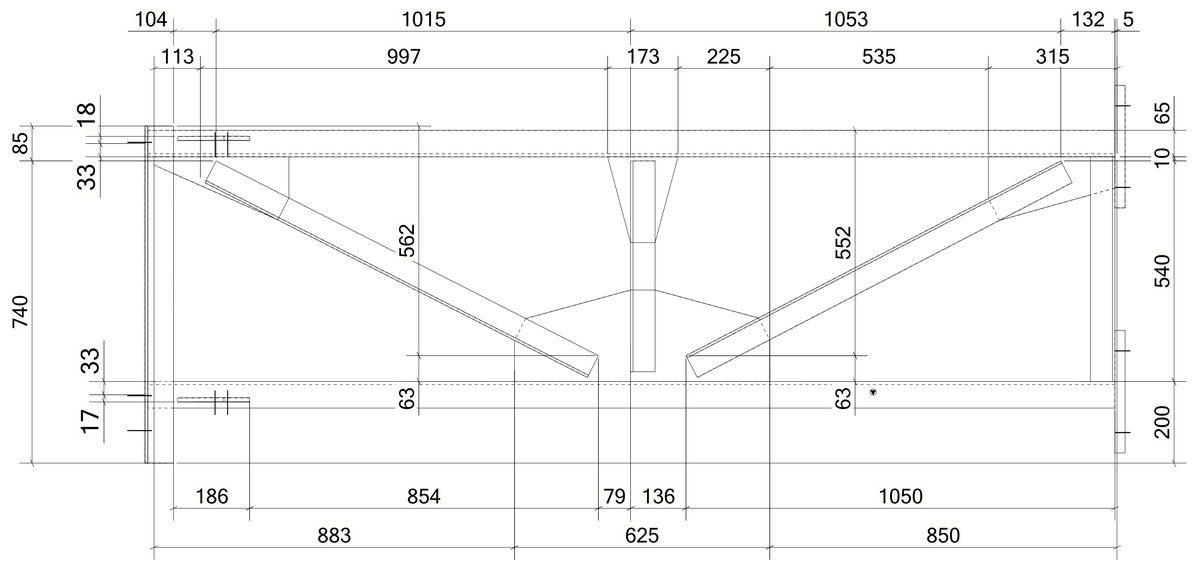

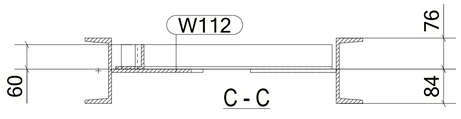

C - C

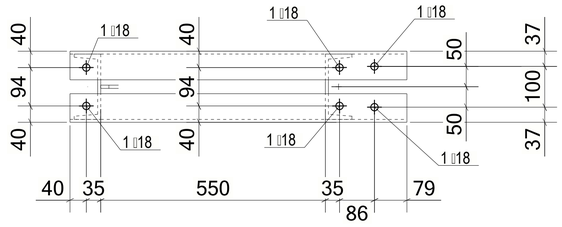

A - A

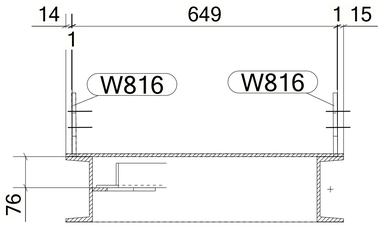

B - B

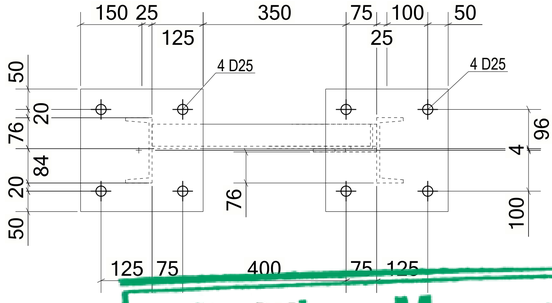

D - D

MATERIAL LIST FOR ASSEMBLY MK'D **Z8-FR015**

Mark	Profile	GRADE	No.	Length	Area	Weight
Z8-FR015	UPN160	S235JR	1	2368	1.30	44.61
W101	UPN160	S235JR	1	2368	1.30	44.61
W103	L60*6	S235JR	1	550	0.13	2.95
W104	L70*7	S235JR	1	825	0.23	6.03
W105	L60*6	S235JR	1	516	0.13	2.77
W106	L60*6	S235JR	1	1034	0.25	5.55
W107	L60*6	S235JR	1	1051	0.25	5.64
W111	L70*7	S235JR	1	825	0.23	6.03
W112	PL8*223.9	S355JR	1	625	0.25	7.35
W114	PL8*166.7	S355JR	1	233	0.05	1.53
W118	PL25*300	S355JR	2	300	0.21	17.66
W130	PL8*155.4	S355JR	1	310	0.08	2.28
W131	PL8*154.2	S355JR	1	330	0.07	1.87
W816	PL10*155.9	S355JR	2	176	0.05	1.56
				Total	4.79	169.70

BOLT LIST:-

BOLT \ STUD	BOLT DESCRIPTION	QTY	FINISH

1 *REQUIRED AS DRAWN MARKED* **Z8-FR015**

6 October Monorail
Engineering Unit
Valid For Construction

GENERAL NOTES:

1. THE DIMENSIONS SHOWN ARE NOMINAL (IN MILLIMETERS), U.N.O.
2. WELD SIZESHALL BE AISC MINIMUM OF 6 mm UNLESS NOTED OTHERWISE.
3. ALL FIELD WELDS SHALL BE INSPECTED PER QUALITY ASSURANCE AND SPECIAL INSPECTIONS.

REFERENCE DRAWINGS

1	93M-BOA-NAT-LOT-04833
2	93M-BOA-NAT-LOT-09170
3	93M-BOA-NAT-LOT-01976
4	93M-BOA-NAT-LOT-20021
5	
6	
7	
8	
9	

6TH OF OCTOBER CITY RAIL TRANSIT MONORAIL

The Authority — Hill International Consultant — Main Contractor — Structural Designer

KEY PLAN:

SCALE: AS SHOWN | SHOPDRAWING | DATE: 12/05/2023

REV	DATE	DSG.	CHK.	APP.	AMENDMENTS	STATUS
B	12/05/2023	M.KH	M.KH	DR.M.M	ISSUED FOR INFORMATION	IFI
A	11/20/2022	M.KH	M.KH	DR.M.M	ISSUED FOR INFORMATION	IFI

DRAWING TITLE
6TH OF OCTOBER MONORAIL
SERVICE WALKWAYS
ZONE (1008)
Z8-FR015

Project Code	Rubric	Initiator	Lot	Ref	Number	Revision
93	M04	76	ACC60	DEP	DWG0819	4 B

Tekla structures

Same comments as
93M-0476-ACC-60DEP-DWG-08180-B.

REVIEWED WITH COMMENT
MONORAILS PROJECT

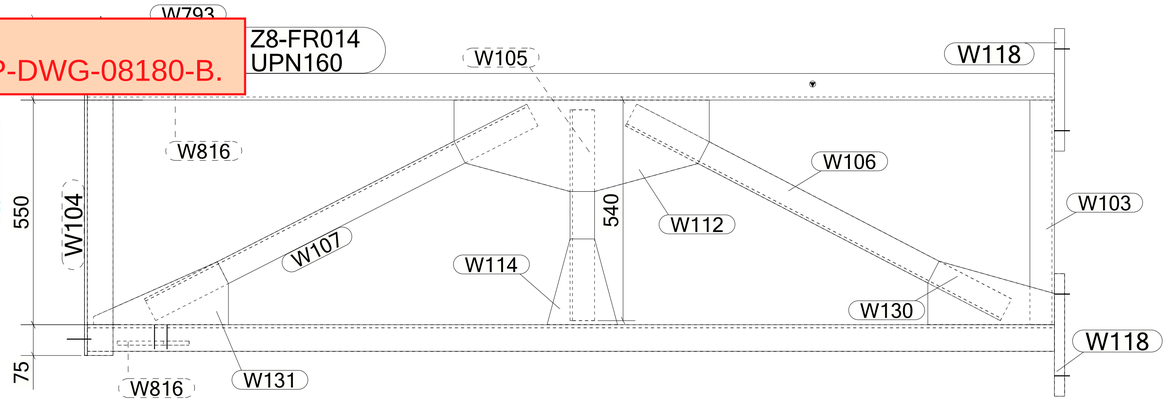

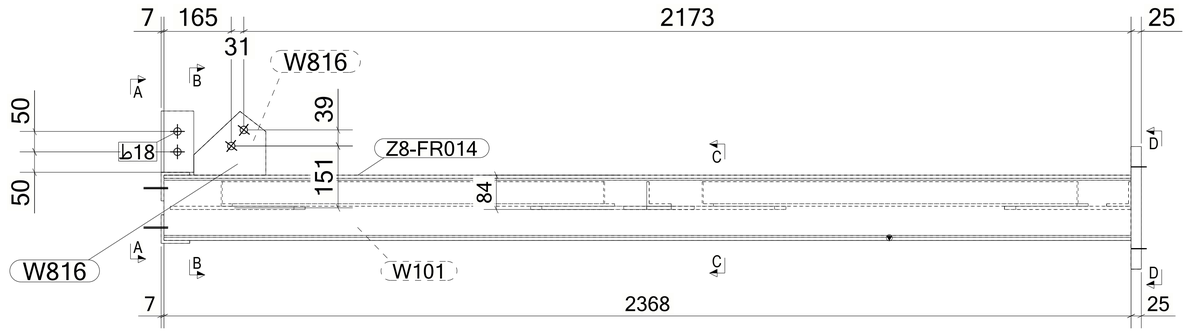

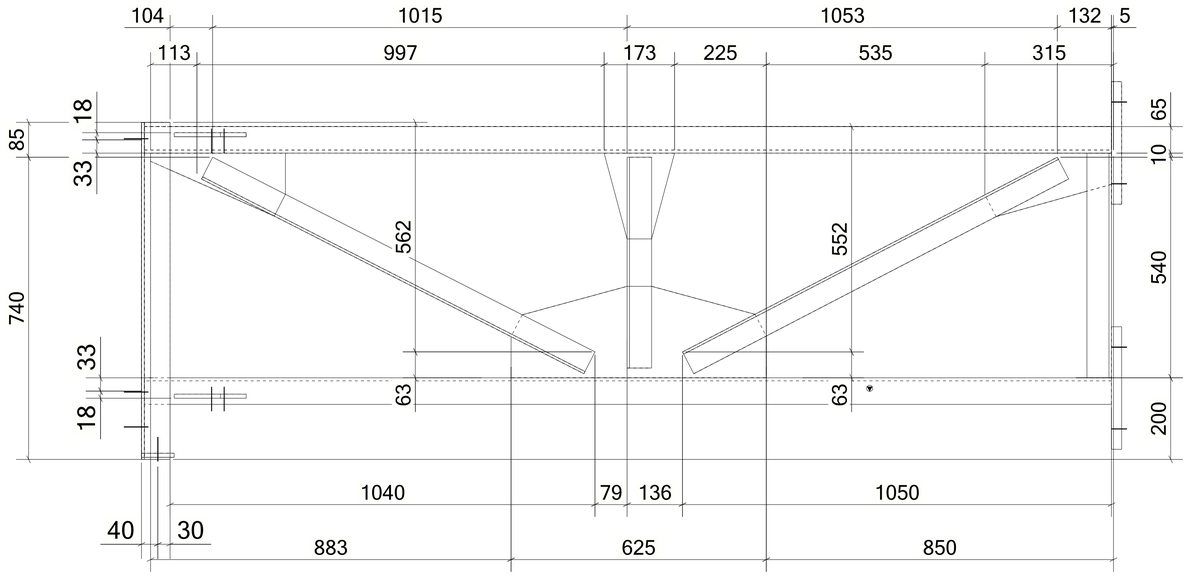

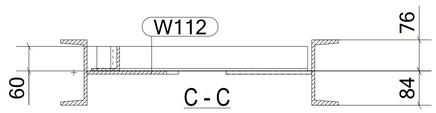

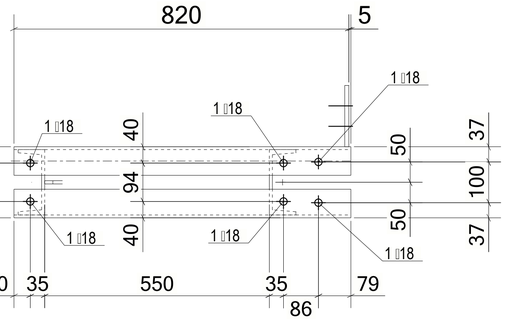

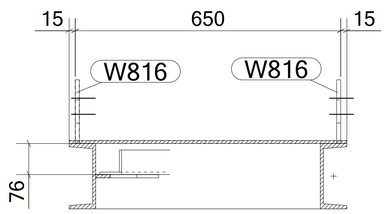

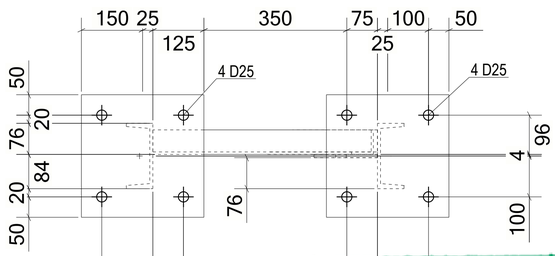

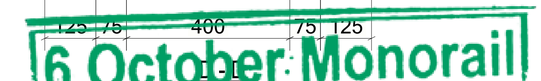

1 *REQUIRED AS DRAWN MARKED* **Z8-FR014**

MATERIAL LIST FOR ASSEMBLY MK'D **Z8-FR014**

Mark	Profile	GRADE	No.	Length	Area	Weight
Z8-FR014	UPN160	S235JR	1	2368	1.30	44.61
W101	UPN160	S235JR	1	2368	1.30	44.61
W103	L60*6	S235JR	1	550	0.13	2.95
W104	L70*7	S235JR	1	825	0.23	6.03
W105	L60*6	S235JR	1	516	0.13	2.77
W106	L60*6	S235JR	1	1034	0.25	5.55
W107	L60*6	S235JR	1	1051	0.25	5.64
W111	L70*7	S235JR	1	825	0.23	6.03
W112	PL8*223.9	S355JR	1	625	0.25	7.35
W114	PL8*166.7	S355JR	1	233	0.05	1.53
W118	PL25*300	S355JR	2	300	0.21	17.66
W130	PL8*155.4	S355JR	1	310	0.08	2.28
W131	PL8*154.2	S355JR	1	330	0.07	1.87
W793	PL10*80	S355JR	1	150	0.03	0.94
W816	PL10*155.9	S355JR	2	176	0.05	1.56
				Total	4.82	170.64

BOLT LIST:-

BOLT \ STUD	BOLT DESCRIPTION	QTY	FINISH

6 October Monorail
Engineering Unit
Valid For Construction

GENERAL NOTES:

1. THE DIMENSIONS SHOWN ARE NOMINAL (IN MILLIMETERS), U.N.O.
2. WELD SIZESHALL BE AISC MINIMUM OF 6 mm UNLESS NOTED OTHERWISE.
3. ALL FIELD WELDS SHALL BE INSPECTED PER QUALITY ASSURANCE AND SPECIAL INSPECTIONS.

REFERENCE DRAWINGS

1	93M-BOA-NAT-LOT-04833
2	93M-BOA-NAT-LOT-09170
3	93M-BOA-NAT-LOT-01976
4	93M-BOA-NAT-LOT-20021
5	
6	
7	
8	
9	

6TH OF OCTOBER CITY RAIL TRANSIT MONORAIL

The Authority | Consultant: Hill International | Main Contractor: ORASCOM CONSTRUCTION / BOMBARDIER | Structural Designer: INNOVA TRANSPORTATION

KEY PLAN:

SCALE: AS SHOWN | SHOPDRAWING | DATE: 12/05/2023

REV	DATE	DSG.	CHK.	APP.	AMENDMENTS	STATUS
B	12/05/2023	MKH	MKH	DR.M.M	ISSUED FOR INFORMATION	IFI
A	11/20/2022	MKH	MKH	DR.M.M	ISSUED FOR INFORMATION	IFI

DRAWING TITLE
6TH OF OCTOBER MONORAIL
SERVICE WALKWAYS
ZONE (1008)
Z8-FR014

Project Code	Rubric	Initiator	Lot	Ref	Number	Revision
93M	047	6ACC	60DE	PDWG	08193	B

Tekla structures

Same comments as 93M-0476-ACC-60DEP-DWG-08180-B.

REVIEWED WITH COMMENT MONORAILS PROJECT

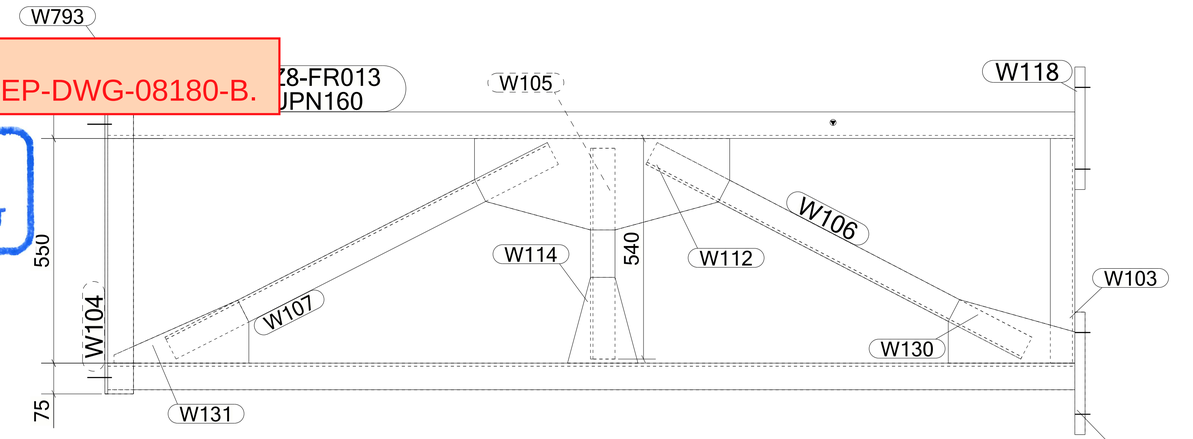

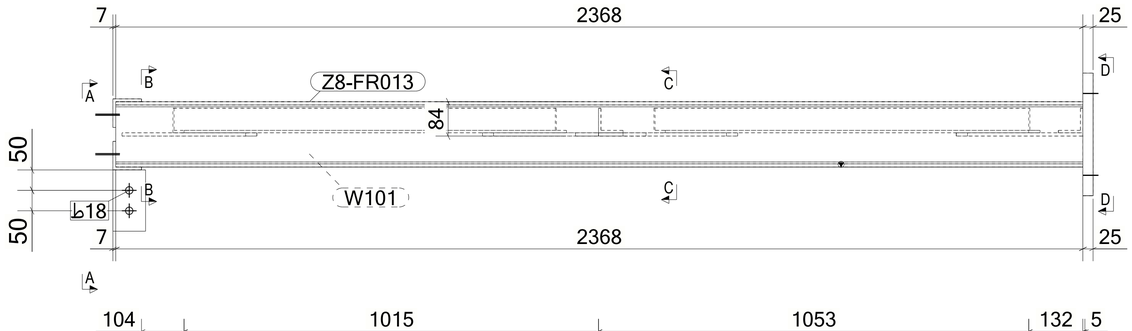

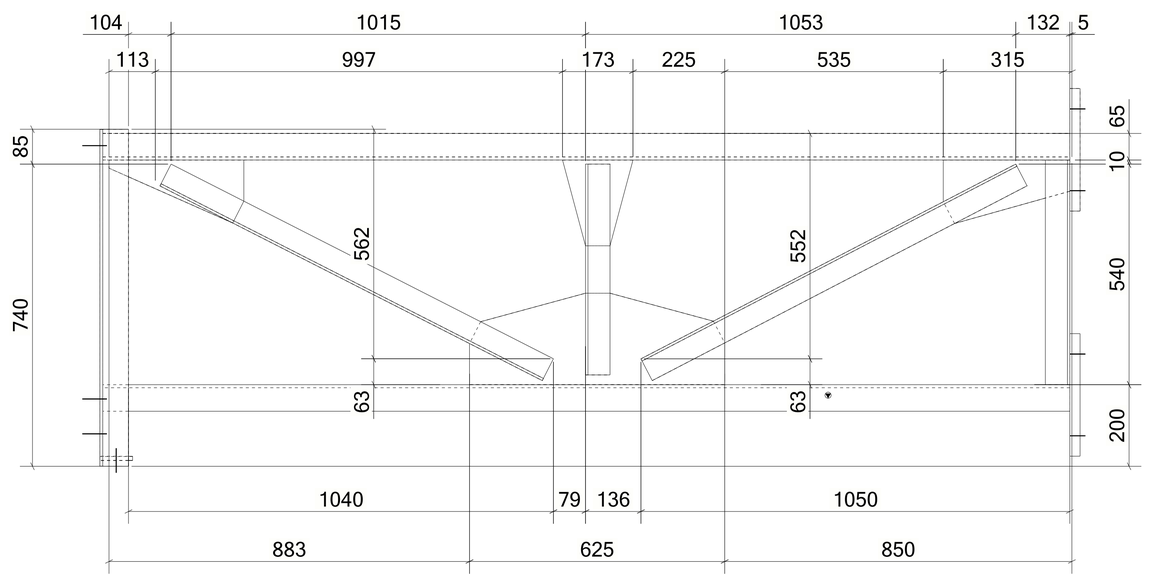

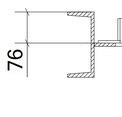

B - B

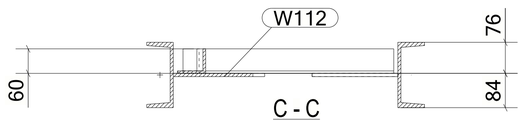

C - C

1 *REQUIRED AS DRAWN MARKED* **Z8-FR013**

MATERIAL LIST FOR ASSEMBLY MK'D **Z8-FR013**						
Mark	Profile	GRADE	No.	Length	Area	Weight
Z8-FR013	UPN160	S235JR	1	2368	1.30	44.61
W101	UPN160	S235JR	1	2368	1.30	44.61
W103	L60*6	S235JR	1	550	0.13	2.95
W104	L70*7	S235JR	1	825	0.23	6.03
W105	L60*6	S235JR	1	516	0.13	2.77
W106	L60*6	S235JR	1	1034	0.25	5.55
W107	L60*6	S235JR	1	1051	0.25	5.64
W111	L70*7	S235JR	1	825	0.23	6.03
W112	PL8*223.9	S355JR	1	625	0.25	7.35
W114	PL8*166.7	S355JR	1	233	0.05	1.53
W118	PL25*300	S355JR	2	300	0.21	17.66
W130	PL8*155.4	S355JR	1	310	0.08	2.28
W131	PL8*154.2	S355JR	1	330	0.07	1.87
W793	PL10*80	S355JR	1	150	0.03	0.94
				Total	4.73	167.51

BOLT LIST:-

BOLT \ STUD	BOLT DESCRIPTION	QTY	FINISH

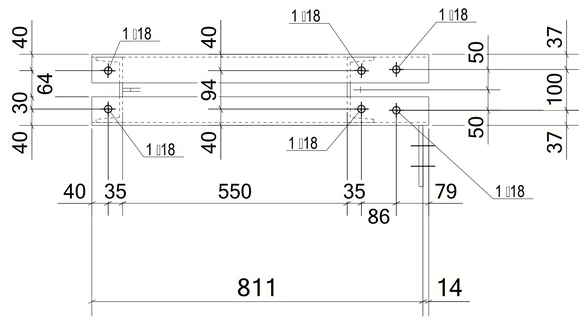

A - A

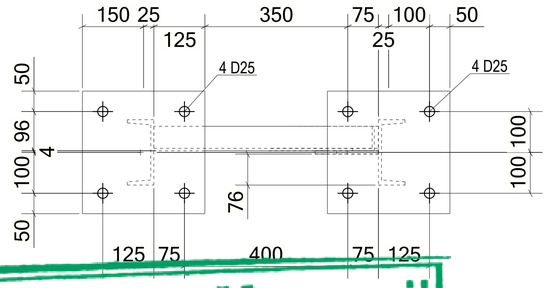

D - D

6 October Monorail
Engineering Unit
Valid For Construction

GENERAL NOTES:

1. THE DIMENSIONS SHOWN ARE NOMINAL (IN MILLIMETERS), U.N.O.
2. WELD SIZESHALL BE AISC MINIMUM OF 6 mm UNLESS NOTED OTHERWISE.
3. ALL FIELD WELDS SHALL BE INSPECTED PER QUALITY ASSURANCE AND SPECIAL INSPECTIONS.

REFERENCE DRAWINGS

1	93M-BOA-NAT-LOT-04833
2	93M-BOA-NAT-LOT-09170
3	93M-BOA-NAT-LOT-01976
4	93M-BOA-NAT-LOT-20021
5	
6	
7	
8	
9	

6TH OF OCTOBER CITY RAIL TRANSIT MONORAIL

The Authority | Consultant: Hill International | Main Contractor: ORASCOM CONSTRUCTION, BOMBARDIER | Structural Designer: INNOVA TRANSPORTATION

KEY PLAN:

SCALE: AS SHOWN | SHOPDRAWING | DATE: 12/05/2023

REV	DATE	DSG.	CHK.	APP.	AMENDMENTS	STATUS
B	12/05/2023	M.KH	M.KH	DR.M.M	ISSUED FOR INFORMATION	IFI
A	11/20/2022	M.KH	M.KH	DR.M.M	ISSUED FOR INFORMATION	IFI

DRAWING TITLE
6TH OF OCTOBER MONORAIL
SERVICE WALKWAYS
ZONE (1008)
Z8-FR013

Project Code	Rubric	Initiator	Lot	Ref	Number	Revision
93M0476	ACC	60DEP	DWG	08192		B

Tekla structures

Same comments as 93M-0476-ACC-60DEP-DWG-08180-B.

REVIEWED WITH COMMENT MONORAILS PROJECT

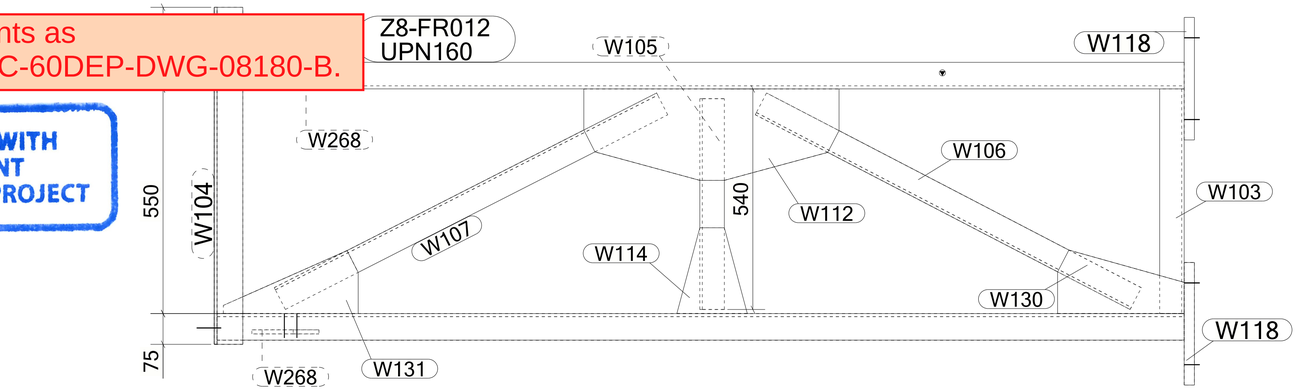

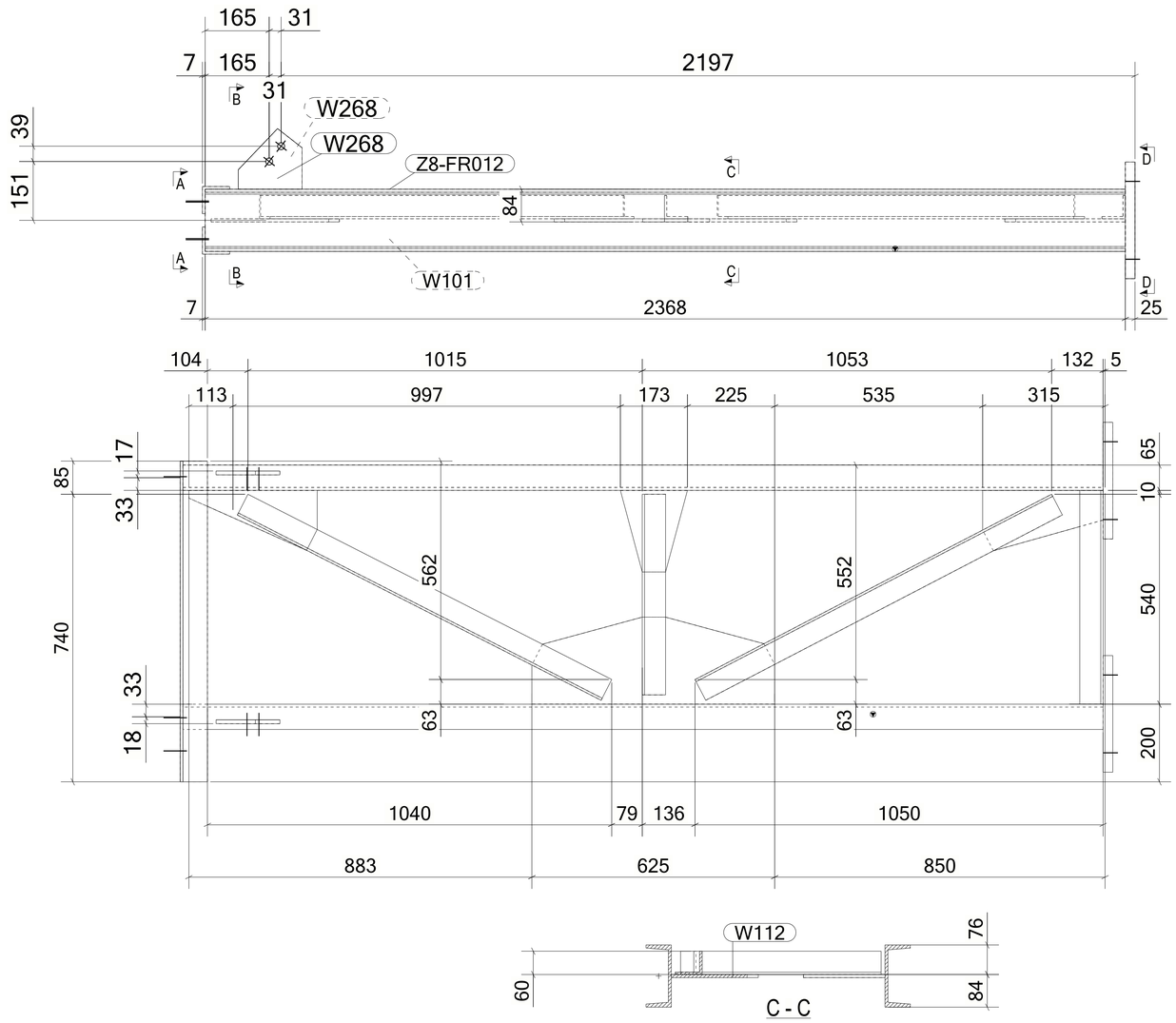

C - C

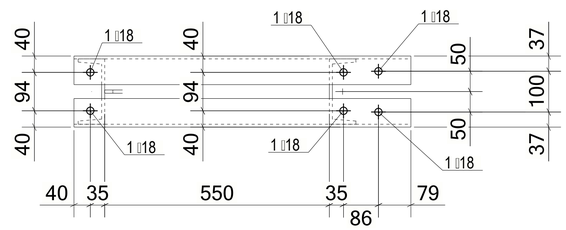

A - A

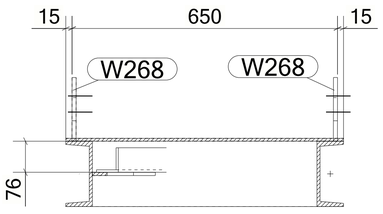

B - B

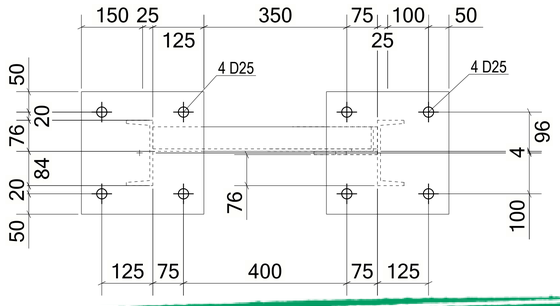

D - D

MATERIAL LIST FOR ASSEMBLY MK'D **Z8-FR012**

Mark	Profile	GRADE	No.	Length	Area	Weight
Z8-FR012	UPN160	S235JR	1	2368	1.30	44.61
W101	UPN160	S235JR	1	2368	1.30	44.61
W103	L60*6	S235JR	1	550	0.13	2.95
W104	L70*7	S235JR	1	825	0.23	6.03
W105	L60*6	S235JR	1	516	0.13	2.77
W106	L60*6	S235JR	1	1034	0.25	5.55
W107	L60*6	S235JR	1	1051	0.25	5.64
W111	L70*7	S235JR	1	825	0.23	6.03
W112	PL8*223.9	S355JR	1	625	0.25	7.35
W114	PL8*166.7	S355JR	1	233	0.05	1.53
W118	PL25*300	S355JR	2	300	0.21	17.66
W130	PL8*155.4	S355JR	1	310	0.08	2.28
W131	PL8*154.2	S355JR	1	330	0.07	1.87
W268	PL10*155.9	S355JR	2	164	0.04	1.47
				Total	4.78	169.50

BOLT LIST:-

BOLT \ STUD	BOLT DESCRIPTION	QTY	FINISH

1 *REQUIRED AS DRAWN MARKED* **Z8-FR012**

6 October Monorail
Engineering Unit
Valid For Construction

GENERAL NOTES:

1. THE DIMENSIONS SHOWN ARE NOMINAL (IN MILLIMETERS), U.N.O.
2. WELD SIZESHALL BE AISC MINIMUM OF 6 mm UNLESS NOTED OTHERWISE.
3. ALL FIELD WELDS SHALL BE INSPECTED PER QUALITY ASSURANCE AND SPECIAL INSPECTIONS.

REFERENCE DRAWINGS

1	93M-BOA-NAT-LOT-04833
2	93M-BOA-NAT-LOT-09170
3	93M-BOA-NAT-LOT-01976
4	93M-BOA-NAT-LOT-20021
5	
6	
7	
8	
9	

6TH OF OCTOBER CITY RAIL TRANSIT MONORAIL

The Authority | Consultant: Hill International | Main Contractor: ORASCOM CONSTRUCTION, BOMBARDIER | Structural Designer: INNOVA TRANSPORTATION

KEY PLAN:

SCALE	SHOPDRAWING	DATE
AS SHOWN		12/05/2023

REV	DATE	DSG.	CHK.	APP.	AMENDMENTS	STATUS
B	12/05/2023	M.KH	M.KH	DR.M.M	ISSUED FOR INFORMATION	IFI
A	11/20/2022	M.KH	M.KH	DR.M.M	ISSUED FOR INFORMATION	IFI

DRAWING TITLE
6TH OF OCTOBER MONORAIL
SERVICE WALKWAYS
ZONE (1008)
Z8-FR012

Project Code	Rubric	Initiator	Lot	Ref	Number	Revision
93M	0476	ACC	60DEP	DWG	08191	B

Tekla structures

Same comments as
93M-0476-ACC-60DEP-DWG-08180-B.

REVIEWED WITH COMMENT
MONORAILS PROJECT

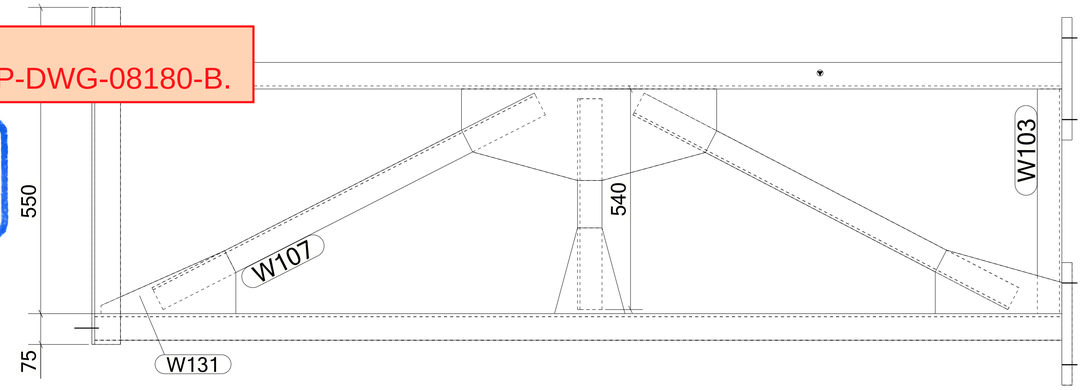

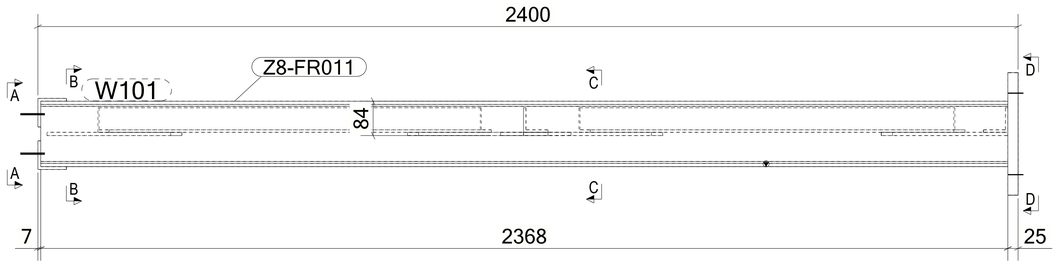

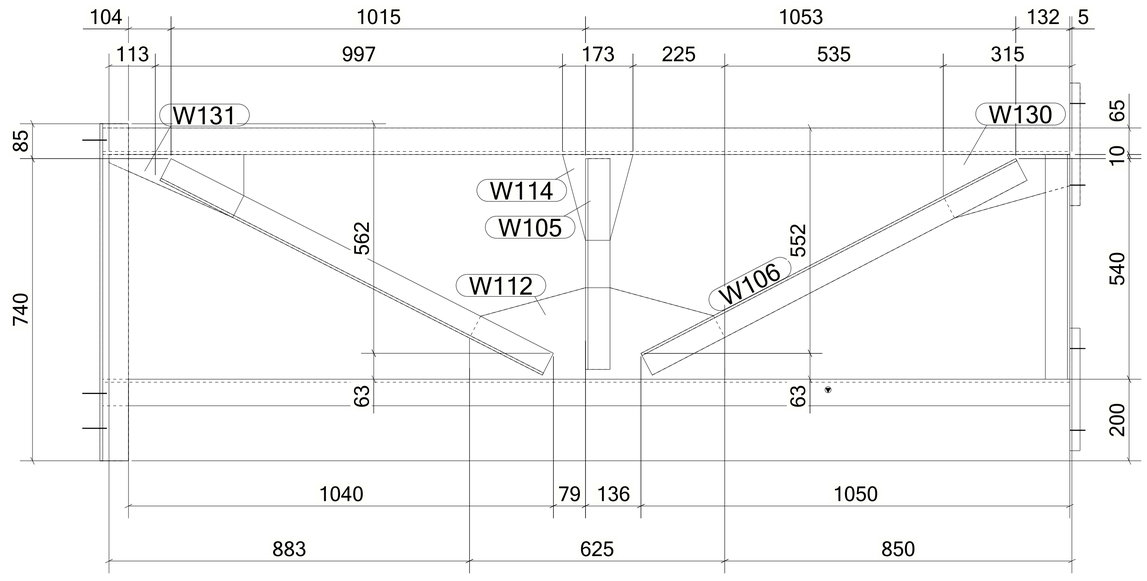

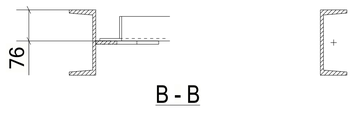

B - B

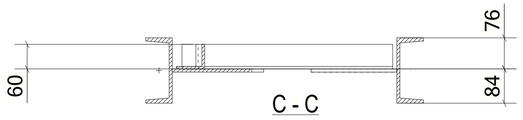

C - C

MATERIAL LIST FOR ASSEMBLY MK'D **Z8-FR011**						
Mark	Profile	GRADE	No.	Length	Area	Weight
Z8-FR011	UPN160	S235JR	1	2368	1.30	44.61
W101	UPN160	S235JR	1	2368	1.30	44.61
W103	L60*6	S235JR	1	550	0.13	2.95
W104	L70*7	S235JR	1	825	0.23	6.03
W105	L60*6	S235JR	1	516	0.13	2.77
W106	L60*6	S235JR	1	1034	0.25	5.55
W107	L60*6	S235JR	1	1051	0.25	5.64
W111	L70*7	S235JR	1	825	0.23	6.03
W112	PL8*223.9	S355JR	1	625	0.25	7.35
W114	PL8*166.7	S355JR	1	233	0.05	1.53
W118	PL25*300	S355JR	1	300	0.21	17.66
W130	PL8*155.4	S355JR	1	310	0.08	2.28
W131	PL8*154.2	S355JR	1	330	0.07	1.87
W150	PL25*300	S355JR	1	300	0.21	17.66
				Total	4.70	166.57

BOLT LIST:-

BOLT \ STUD	BOLT DESCRIPTION	QTY	FINISH

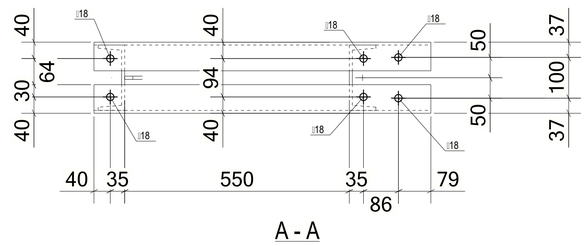

A - A

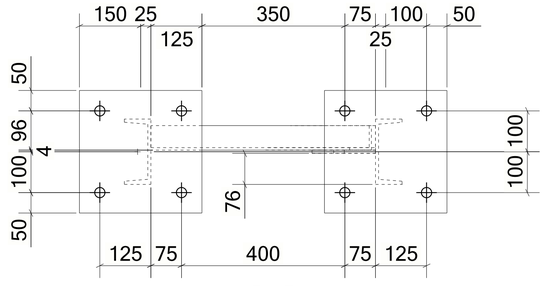

D - D

35 *REQUIRED AS DRAWN MARKED* **Z8-FR011**

6 October Monorail
Engineering Unit
Valid For Construction

GENERAL NOTES:

1. THE DIMENSIONS SHOWN ARE NOMINAL (IN MILLIMETERS), U.N.O.
2. WELD SIZESHALL BE AISC MINIMUM OF 6 mm UNLESS NOTED OTHERWISE.
3. ALL FIELD WELDS SHALL BE INSPECTED PER QUALITY ASSURANCE AND SPECIAL INSPECTIONS.

REFERENCE DRAWINGS

1	93M-BOA-NAT-LOT-04833
2	93M-BOA-NAT-LOT-09170
3	93M-BOA-NAT-LOT-01976
4	93M-BOA-NAT-LOT-20021
5	
6	
7	
8	
9	

6TH OF OCTOBER CITY RAIL TRANSIT MONORAIL

The Authority — Hill International Consultant — Main Contractor — Structural Designer

KEY PLAN:

SCALE	SHOPDRAWING	DATE
AS SHOWN		12/05/2023

REV	DATE	DSG.	CHK.	APP.	AMENDMENTS	STATUS
B	12/05/2023	M.KH	M.KH	DR.M.M	ISSUED FOR INFORMATION	IFI
A	11/20/2022	M.KH	M.KH	DR.M.M	ISSUED FOR INFORMATION	IFI

DRAWING TITLE
6TH OF OCTOBER MONORAIL
SERVICE WALKWAYS
ZONE (1008)
Z8-FR011

Project Code	Rubric	Initiator	Lot	Ref	Number	Revision
93	M047	6ACC	60DEP	DWG	08190	B

Tekla structures

Same comments as
93M-0476-ACC-60DEP-DWG-08180-B.

REVIEWED WITH COMMENT
MONORAILS PROJECT

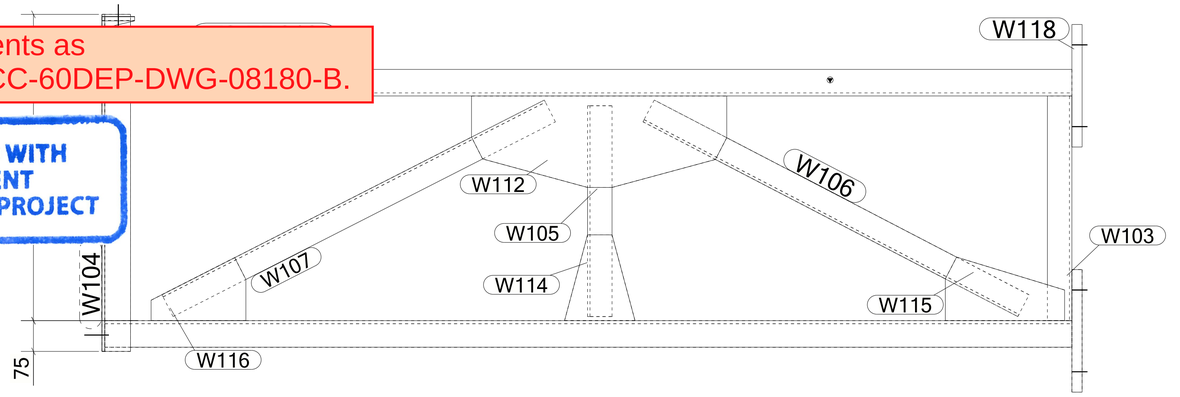

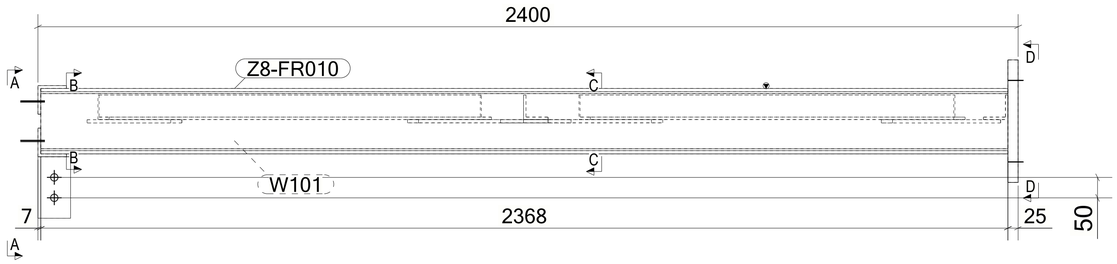

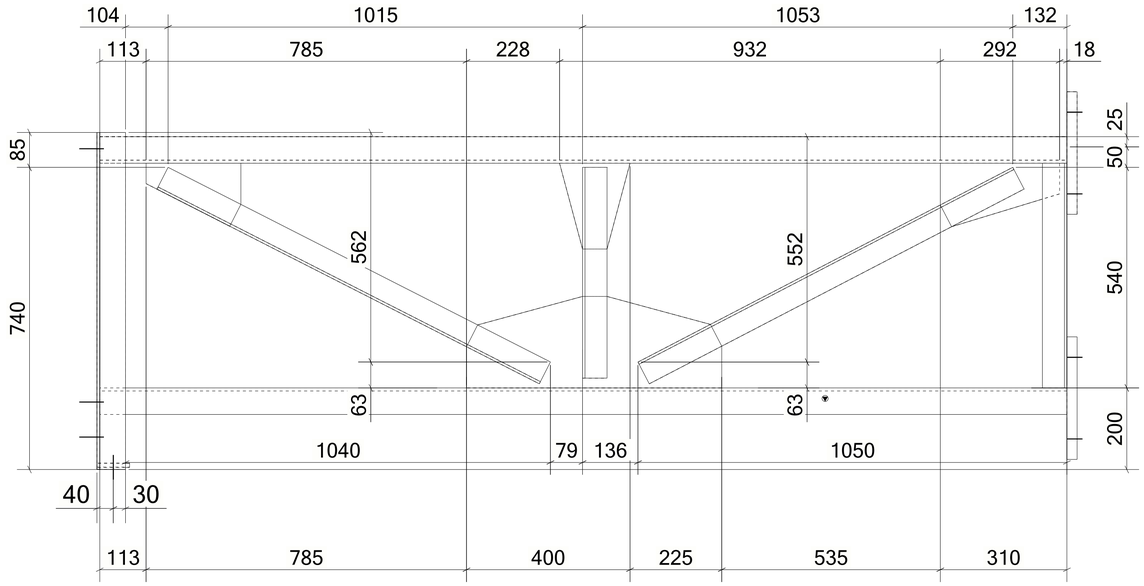

A - A

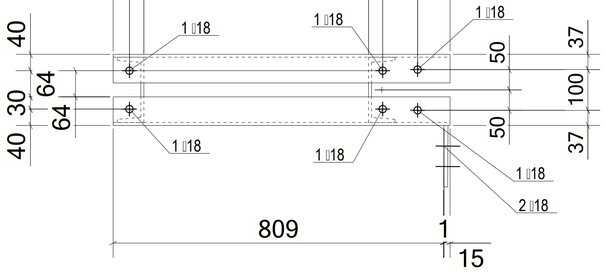

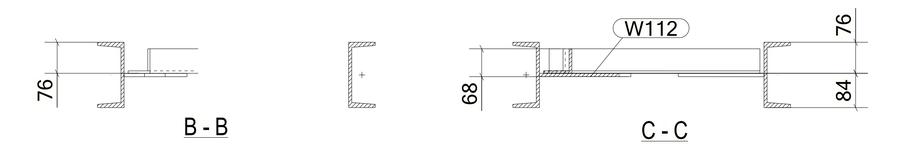

B - B

C - C

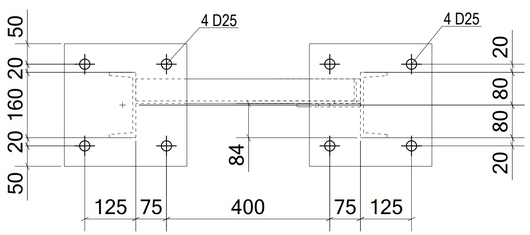

D - D

MATERIAL LIST FOR ASSEMBLY MK'D **Z8-FR010**

Mark	Profile	GRADE	No.	Length	Area	Weight
Z8-FR010	UPN160	S235JR	1	2368	1.30	44.61
W101	UPN160	S235JR	1	2368	1.30	44.61
W103	L60*6	S235JR	1	550	0.13	2.95
W104	L70*7	S235JR	1	825	0.23	6.03
W105	L60*6	S235JR	1	516	0.13	2.77
W106	L60*6	S235JR	1	1034	0.25	5.55
W107	L60*6	S235JR	1	1050	0.25	5.64
W111	L70*7	S235JR	1	825	0.23	6.03
W112	PL8*223.9	S355JR	1	625	0.25	7.35
W114	PL8*166.7	S355JR	1	233	0.05	1.53
W115	PL8*155.4	S355JR	1	292	0.07	2.14
W116	PL8*154.2	S355JR	1	232	0.05	1.53
W118	PL25*300	S355JR	2	300	0.21	17.66
W793	PL10*80	S355JR	1	151	0.03	0.95
				Total	4.71	167.03

BOLT LIST:-

BOLT \ STUD	BOLT DESCRIPTION	QTY	FINISH

1 *REQUIRED AS DRAWN MARKED* **Z8-FR010**

6 October Monorail
Engineering Unit
Valid For Construction

GENERAL NOTES:

1. THE DIMENSIONS SHOWN ARE NOMINAL (IN MILLIMETERS), U.N.O.
2. WELD SIZESHALL BE AISC MINIMUM OF 6 mm UNLESS NOTED OTHERWISE.
3. ALL FIELD WELDS SHALL BE INSPECTED PER QUALITY ASSURANCE AND SPECIAL INSPECTIONS.

REFERENCE DRAWINGS

1	93M-BOA-NAT-LOT-04833
2	93M-BOA-NAT-LOT-09170
3	93M-BOA-NAT-LOT-01976
4	93M-BOA-NAT-LOT-20021
5	
6	
7	
8	
9	

6TH OF OCTOBER CITY RAIL TRANSIT MONORAIL

The Authority — Consultant — Main Contractor — Structural Designer

KEY PLAN:

SCALE: AS SHOWN | SHOPDRAWING | DATE: 12/05/2023

REV	DATE	DSG.	CHK.	APP.	AMENDMENTS	STATUS
B	12/05/2023	M.KH	M.KH	DR.M.M	ISSUED FOR INFORMATION	IFI
A	11/20/2022	M.KH	M.KH	DR.M.M	ISSUED FOR INFORMATION	IFI

DRAWING TITLE
6TH OF OCTOBER MONORAIL
SERVICE WALKWAYS
ZONE (1008)
Z8-FR010

Project Code	Rubric	Initiator	Lot	Ref	Number	Revision
93M	0476	ACC	60DEP	DWG	08189	B

Tekla structures

Same comments as
93M-0476-ACC-60DEP-DWG-08180-B.

REVIEWED WITH COMMENT
MONORAILS PROJECT

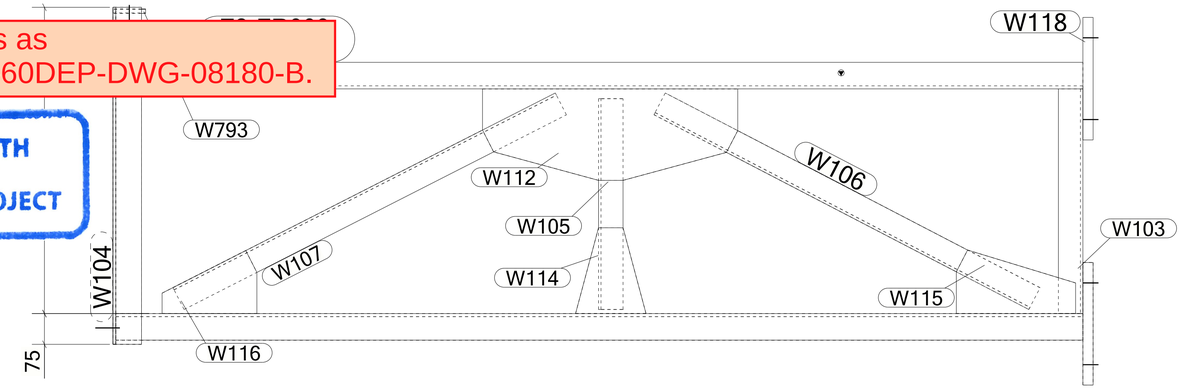

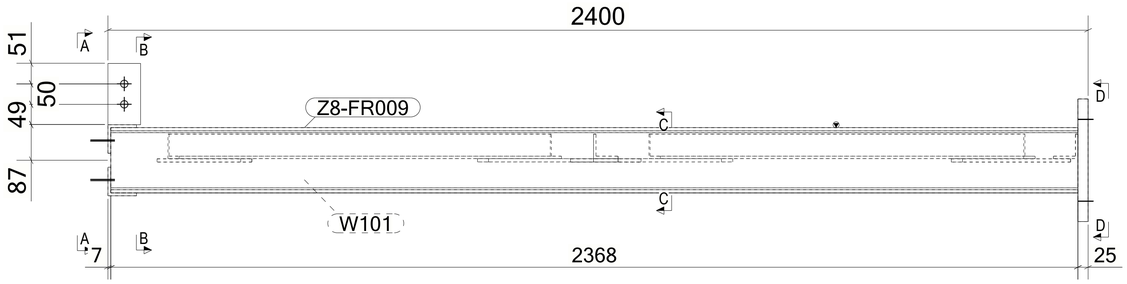

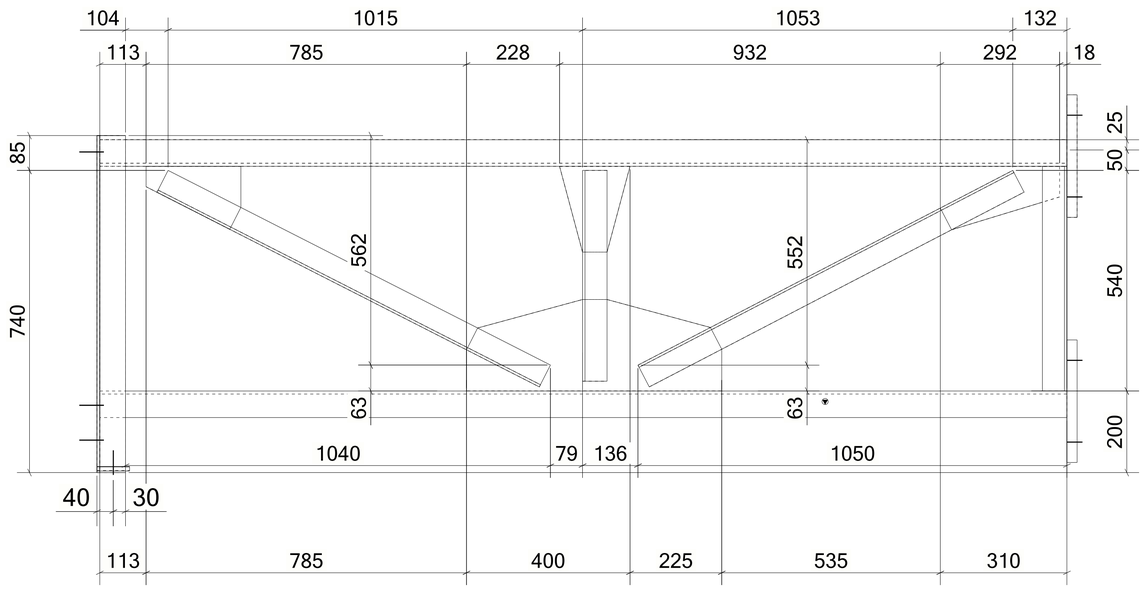

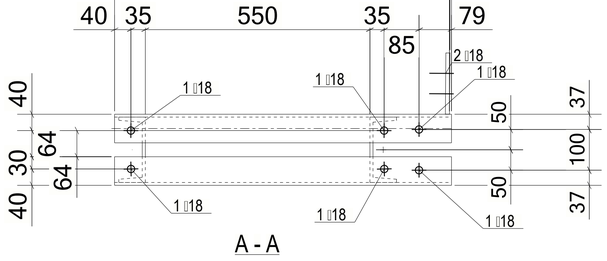

A - A

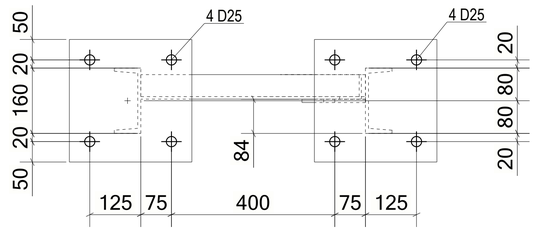

D - D

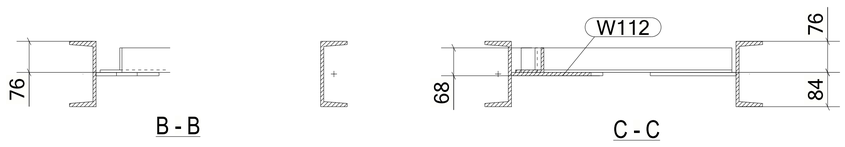

B - B

C - C

MATERIAL LIST FOR ASSEMBLY MK'D **Z8-FR009**

Mark	Profile	GRADE	No.	Length	Area	Weight
Z8-FR009	UPN160	S235JR	1	2368	1.30	44.61
W101	UPN160	S235JR	1	2368	1.30	44.61
W103	L60*6	S235JR	1	550	0.13	2.95
W104	L70*7	S235JR	1	825	0.23	6.03
W105	L60*6	S235JR	1	516	0.13	2.77
W106	L60*6	S235JR	1	1034	0.25	5.55
W107	L60*6	S235JR	1	1050	0.25	5.64
W111	L70*7	S235JR	1	825	0.23	6.03
W112	PL8*223.9	S355JR	1	625	0.25	7.35
W114	PL8*166.7	S355JR	1	233	0.05	1.53
W115	PL8*155.4	S355JR	1	292	0.07	2.14
W116	PL8*154.2	S355JR	1	232	0.05	1.53
W118	PL25*300	S355JR	2	300	0.21	17.66
W793	PL10*80	S355JR	1	150	0.03	0.94
				Total	4.71	167.02

BOLT LIST:-

BOLT \ STUD	BOLT DESCRIPTION	QTY	FINISH

1 *REQUIRED AS DRAWN MARKED* **Z8-FR009**

6 October: Monorail
Engineering Unit
Valid For Construction

GENERAL NOTES:

1. THE DIMENSIONS SHOWN ARE NOMINAL (IN MILLIMETERS), U.N.O.
2. WELD SIZESHALL BE AISC MINIMUM OF 6 mm UNLESS NOTED OTHERWISE.
3. ALL FIELD WELDS SHALL BE INSPECTED PER QUALITY ASSURANCE AND SPECIAL INSPECTIONS.

REFERENCE DRAWINGS

1	93M-BOA-NAT-LOT-04833
2	93M-BOA-NAT-LOT-09170
3	93M-BOA-NAT-LOT-01976
4	93M-BOA-NAT-LOT-20021
5	
6	
7	
8	
9	

6TH OF OCTOBER CITY RAIL TRANSIT MONORAIL

The Authority | Consultant: Hill International | Main Contractor: ORASCOM CONSTRUCTION / BOMBARDIER / The Arab Contractors | Structural Designer: INNOVA TRANSPORTATION

KEY PLAN:

SCALE: AS SHOWN | SHOPDRAWING | DATE: 12/05/2022

REV	DATE	DSG.	CHK.	APP.	AMENDMENTS	STATUS
B	12/05/2023	M.KH	M.KH	DR.M.M	ISSUED FOR INFORMATION	IFI
A	11/20/2022	M.KH	M.KH	DR.M.M	ISSUED FOR INFORMATION	IFI

DRAWING TITLE
6TH OF OCTOBER MONORAIL
SERVICE WALKWAYS
ZONE (1008)
Z8-FR009

Project Code	Rubric	Initiator	Lot	Ref	Number	Revision
93M	0476	ACC	60	DEP	DWG-08188	B

Tekla structures

Same comments as
93M-0476-ACC-60DEP-DWG-08180-B.

REVIEWED WITH COMMENT
MONORAILS PROJECT

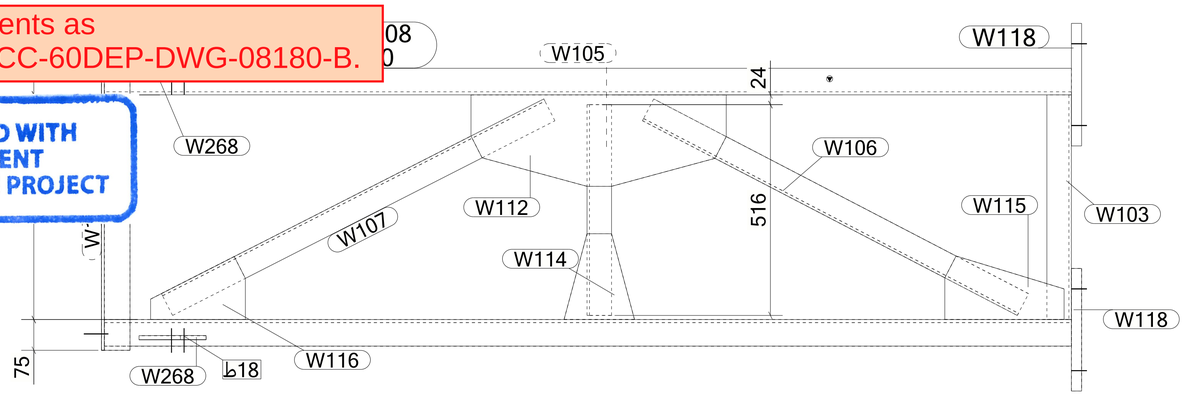

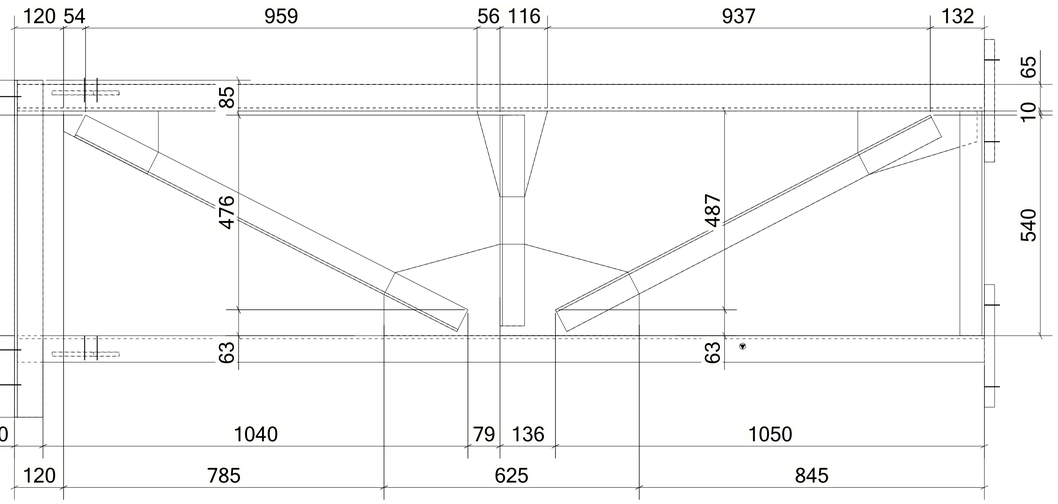

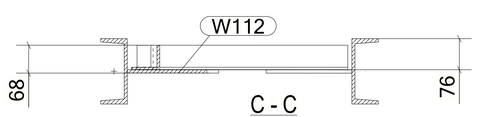

C - C

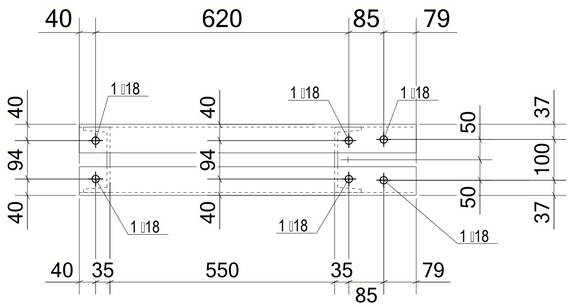

A - A

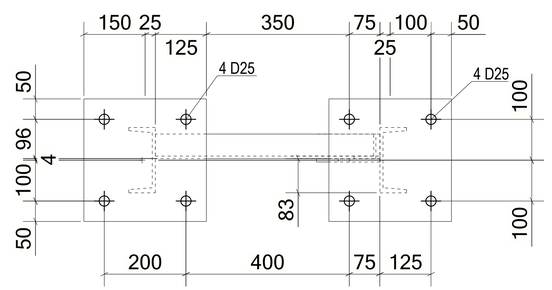

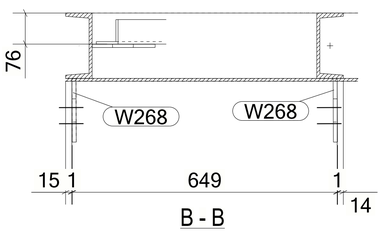

B - B

MATERIAL LIST FOR ASSEMBLY MK'D **Z8-FR008**

Mark	Profile	GRADE	No.	Length	Area	Weight
Z8-FR008	UPN160	S235JR	1	2368	1.30	44.61
W101	UPN160	S235JR	1	2368	1.30	44.61
W103	L60*6	S235JR	1	550	0.13	2.95
W104	L70*7	S235JR	1	825	0.23	6.03
W105	L60*6	S235JR	1	516	0.13	2.77
W106	L60*6	S235JR	1	1034	0.25	5.55
W107	L60*6	S235JR	1	1050	0.25	5.64
W111	L70*7	S235JR	1	825	0.23	6.03
W112	PL8*223.9	S355JR	1	625	0.25	7.35
W114	PL8*166.7	S355JR	1	233	0.05	1.53
W115	PL8*155.4	S355JR	1	292	0.07	2.14
W116	PL8*154.2	S355JR	1	232	0.05	1.53
W118	PL25*300	S355JR	2	300	0.21	17.66
W268	PL10*155.9	S355JR	2	164	0.04	1.47
				Total	4.77	169.02

BOLT LIST:-

BOLT \ STUD	BOLT DESCRIPTION	QTY	FINISH

1 *REQUIRED AS DRAWN MARKED* **Z8-FR008**

6 October Monorail
Engineering Unit
Valid For Construction

GENERAL NOTES:

1. THE DIMENSIONS SHOWN ARE NOMINAL (IN MILLIMETERS), U.N.O.
2. WELD SIZESHALL BE AISC MINIMUM OF 6 mm UNLESS NOTED OTHERWISE.
3. ALL FIELD WELDS SHALL BE INSPECTED PER QUALITY ASSURANCE AND SPECIAL INSPECTIONS.

REFERENCE DRAWINGS

1	93M-BOA-NAT-LOT-04833
2	93M-BOA-NAT-LOT-09170
3	93M-BOA-NAT-LOT-01976
4	93M-BOA-NAT-LOT-20021
5	
6	
7	
8	
9	

6TH OF OCTOBER CITY RAIL TRANSIT MONORAIL

The Authority | Hill International (Consultant) | Main Contractor | Structural Designer

KEY PLAN:

SCALE: AS SHOWN | SHOPDRAWING | DATE: 12/05/2023

REV	DATE	DSG.	CHK.	APP.	AMENDMENTS	STATUS
B	12/05/2023	M.KH	M.KH	DR.M.M	ISSUED FOR INFORMATION	IFI
A	11/20/2022	M.KH	M.KH	DR.M.M	ISSUED FOR INFORMATION	IFI

DRAWING TITLE
6TH OF OCTOBER MONORAIL
SERVICE WALKWAYS
ZONE (1008)
Z8-FR008

Project Code	Rubric	Initiator	Lot	Ref	Number	Revision
93	M047	6ACC	60DEP	DWG	08187	B

Tekla structures

Same comments as 93M-0476-ACC-60DEP-DWG-08180-B.

REVIEWED WITH COMMENT
MONORAILS PROJECT

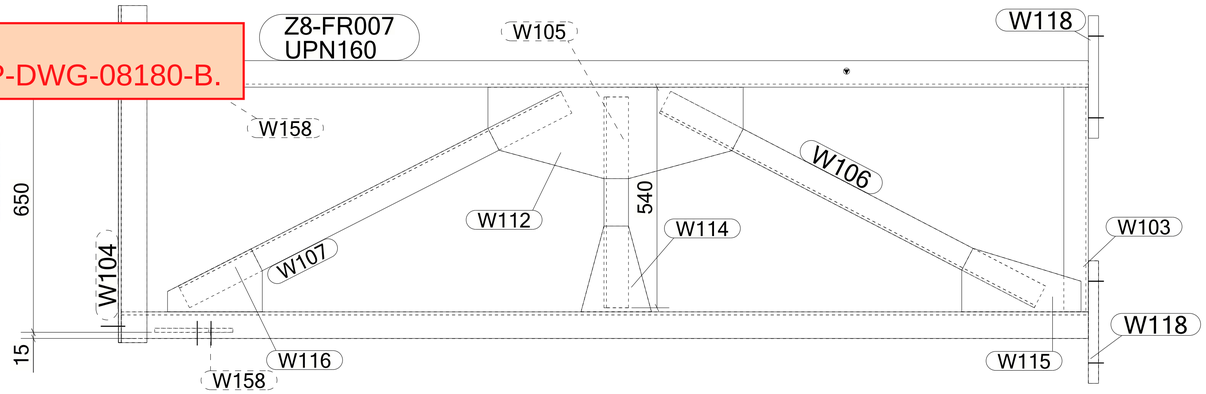

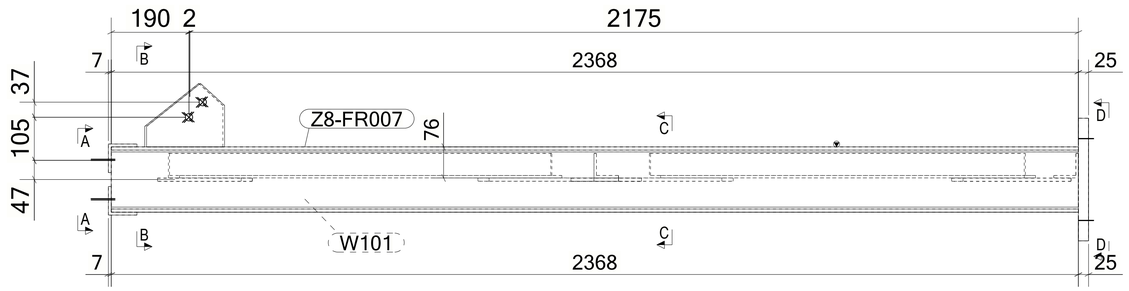

MATERIAL LIST FOR ASSEMBLY MK'D **Z8-FR007**

Mark	Profile	GRADE	No.	Length	Area	Weight
Z8-FR007	UPN160	S235JR	1	2368	1.30	44.61
W101	UPN160	S235JR	1	2368	1.30	44.61
W103	L60*6	S235JR	1	550	0.13	2.95
W104	L70*7	S235JR	1	825	0.23	6.03
W105	L60*6	S235JR	1	516	0.13	2.77
W106	L60*6	S235JR	1	1034	0.25	5.55
W107	L60*6	S235JR	1	1050	0.25	5.64
W111	L70*7	S235JR	1	825	0.23	6.03
W112	PL8*223.9	S355JR	1	625	0.25	7.35
W114	PL8*166.7	S355JR	1	233	0.05	1.53
W115	PL8*155.4	S355JR	1	292	0.07	2.14
W116	PL8*154.2	S355JR	1	232	0.05	1.53
W118	PL25*300	S355JR	2	300	0.21	17.66
W158	PL10*155.2	S355JR	2	191	0.05	1.66
				Total	4.78	169.40

BOLT LIST:-

BOLT \ STUD	BOLT DESCRIPTION	QTY	FINISH

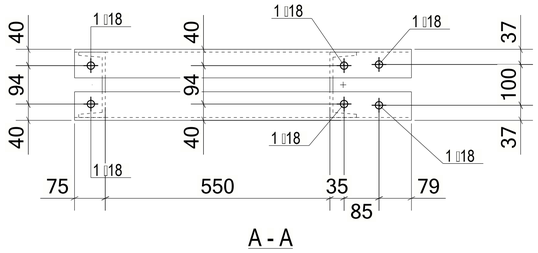

A - A

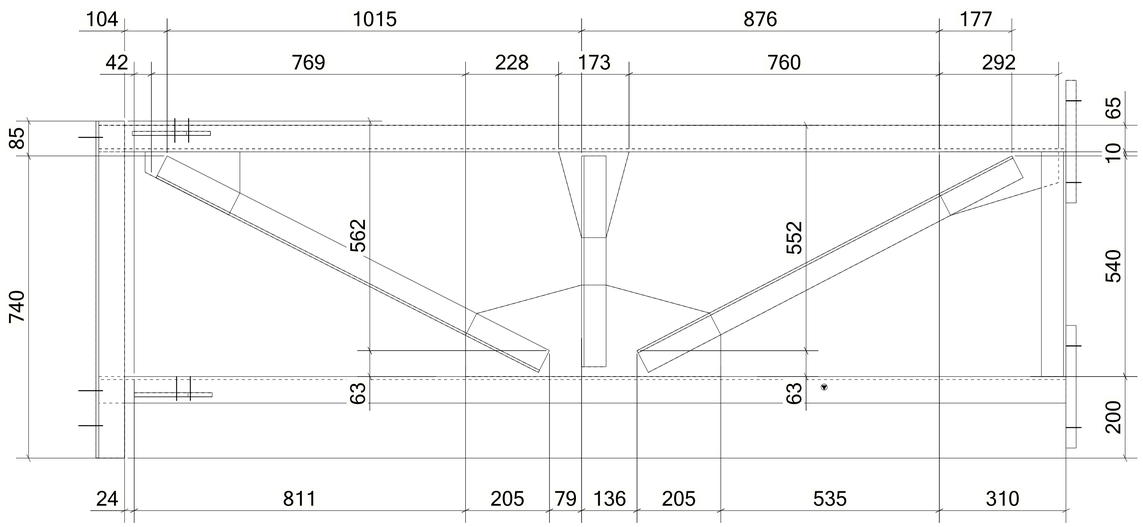

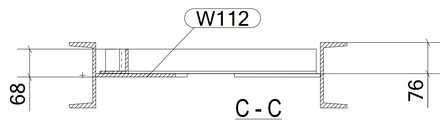

C - C

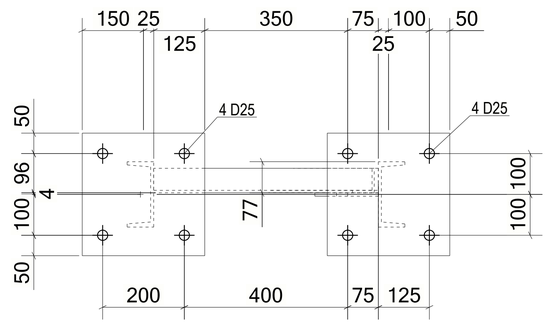

D - D

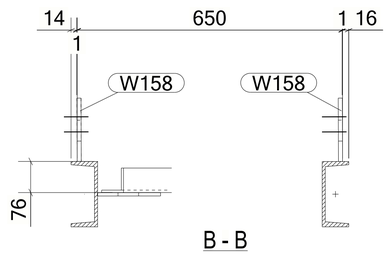

B - B

1 *REQUIRED AS DRAWN MARKED* **Z8-FR007**

6 October Monorail
Engineering Unit
Valid For Construction

GENERAL NOTES:

1. THE DIMENSIONS SHOWN ARE NOMINAL (IN MILLIMETERS), U.N.O.
2. WELD SIZESHALL BE AISC MINIMUM OF 6 mm UNLESS NOTED OTHERWISE.
3. ALL FIELD WELDS SHALL BE INSPECTED PER QUALITY ASSURANCE AND SPECIAL INSPECTIONS.

REFERENCE DRAWINGS

1	93M-BOA-NAT-LOT-04833
2	93M-BOA-NAT-LOT-09170
3	93M-BOA-NAT-LOT-01976
4	93M-BOA-NAT-LOT-20021
5	
6	
7	
8	
9	

6TH OF OCTOBER CITY RAIL TRANSIT MONORAIL

The Authority | Hill International Consultant | Main Contractor | Structural Designer

KEY PLAN:

SCALE	SHOPDRAWING	DATE
AS SHOWN		12/05/2023

REV	DATE	DSG.	CHK.	APP.	AMENDMENTS	STATUS
B	12/05/2023	M.KH	M.KH	DR.M.M	ISSUED FOR INFORMATION	IFI
A	11/20/2022	M.KH	M.KH	DR.M.M	ISSUED FOR INFORMATION	IFI

DRAWING TITLE
6TH OF OCTOBER MONORAIL
SERVICE WALKWAYS
ZONE (1008)
Z8-FR007

Project Code	Rubric	Initiator	Lot	Ref	Number	Revision
93M	047	6ACC	60DE	PDWG	08186	B

Tekla structures

Same comments as
93M-0476-ACC-60DEP-DWG-08180-B.

REVIEWED WITH COMMENT
MONORAILS PROJECT

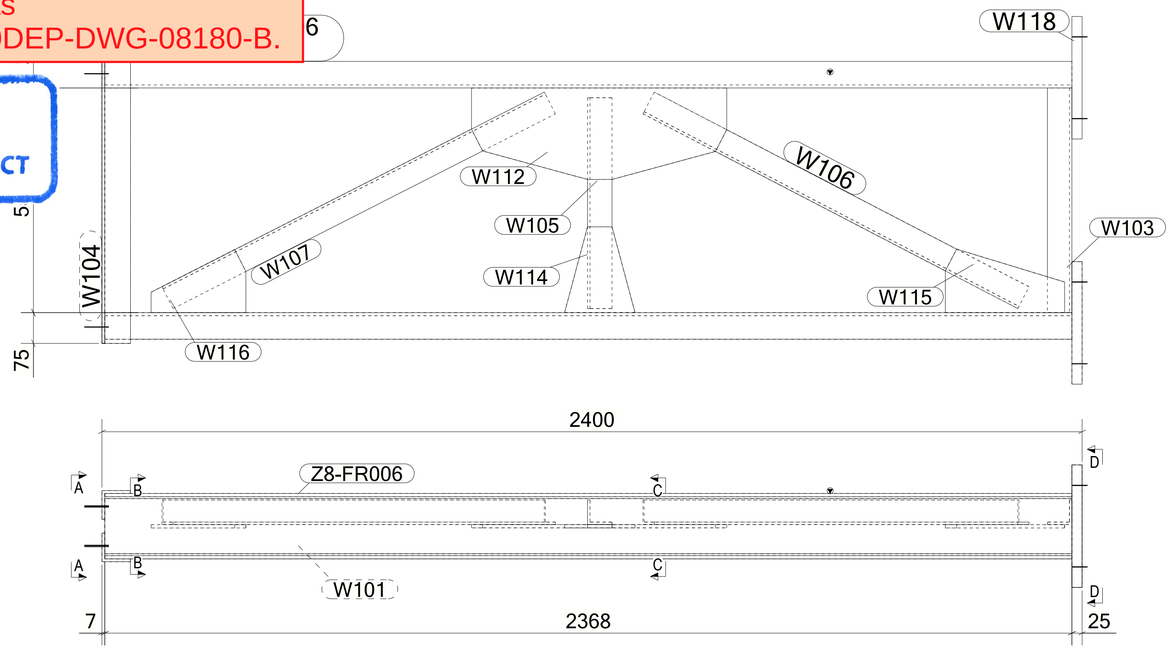

B - B

C - C

MATERIAL LIST FOR ASSEMBLY MK'D **Z8-FR006**						
Mark	Profile	GRADE	No.	Length	Area	Weight
Z8-FR006	UPN160	S235JR	1	2368	1.30	44.61
W101	UPN160	S235JR	1	2368	1.30	44.61
W103	L60*6	S235JR	1	550	0.13	2.95
W104	L70*7	S235JR	1	825	0.23	6.03
W105	L60*6	S235JR	1	516	0.13	2.77
W106	L60*6	S235JR	1	1034	0.25	5.55
W107	L60*6	S235JR	1	1050	0.25	5.64
W111	L70*7	S235JR	1	825	0.23	6.03
W112	PL8*223.9	S355JR	1	625	0.25	7.35
W114	PL8*166.7	S355JR	1	233	0.05	1.53
W115	PL8*155.4	S355JR	1	292	0.07	2.14
W116	PL8*154.2	S355JR	1	232	0.05	1.53
W118	PL25*300	S355JR	2	300	0.21	17.66
				Total	4.68	166.08

BOLT LIST:-

BOLT \ STUD	BOLT DESCRIPTION	QTY	FINISH

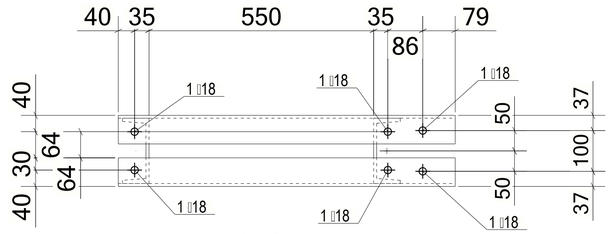

A - A

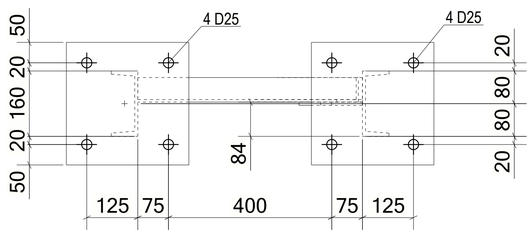

D - D

11 *REQUIRED AS DRAWN MARKED* **Z8-FR006**

GENERAL NOTES:

1. THE DIMENSIONS SHOWN ARE NOMINAL (IN MILLIMETERS), U.N.O.
2. WELD SIZESHALL BE AISC MINIMUM OF 6 mm UNLESS NOTED OTHERWISE.
3. ALL FIELD WELDS SHALL BE INSPECTED PER QUALITY ASSURANCE AND SPECIAL INSPECTIONS.

REFERENCE DRAWINGS

1	93M-BOA-NAT-LOT-04833
2	93M-BOA-NAT-LOT-09170
3	93M-BOA-NAT-LOT-01976
4	93M-BOA-NAT-LOT-20021
5	
6	
7	
8	
9	

6TH OF OCTOBER CITY RAIL TRANSIT MONORAIL

The Authority | Consultant: Hill International | Main Contractor: ORASCOM CONSTRUCTION / BOMBARDIER | Structural Designer: INNOVA TRANSPORTATION

KEY PLAN:

6 October Monorail
Engineering Unit
Valid For Construction

SCALE	SHOPDRAWING	DATE
AS SHOWN		12/05/2023

REV	DATE	DSG.	CHK.	APP.	AMENDMENTS	STATUS
B	12/05/2023	M.KH	M.KH	DR.M.M	ISSUED FOR INFORMATION	IFI
A	11/20/2022	M.KH	M.KH	DR.M.M	ISSUED FOR INFORMATION	IFI

DRAWING TITLE
6TH OF OCTOBER MONORAIL
SERVICE WALKWAYS
ZONE (1008)
Z8-FR006

Project Code	Rubric	Initiator	Lot	Ref	Number	Revision
93M	0476	ACC	60DEP	DWG	08185	B

Tekla structures

Same comments as
93M-0476-ACC-60DEP-DWG-08180-B.

REVIEWED WITH COMMENT MONORAILS PROJECT

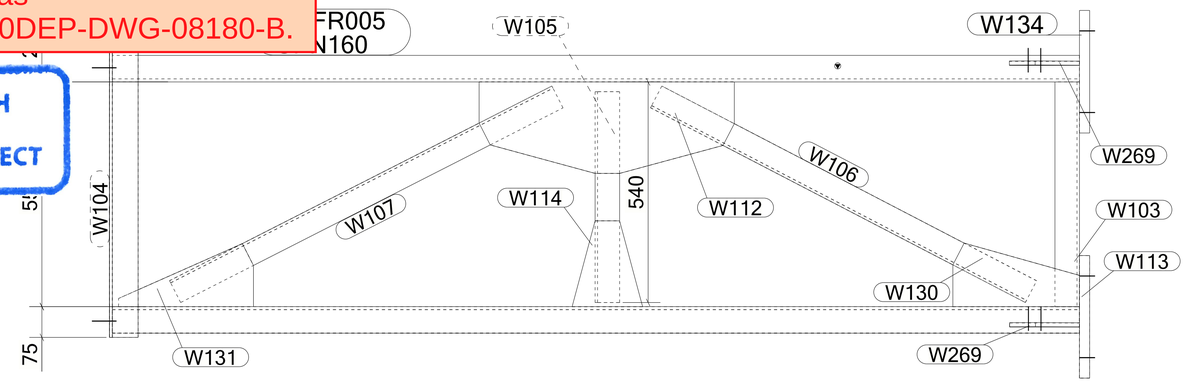

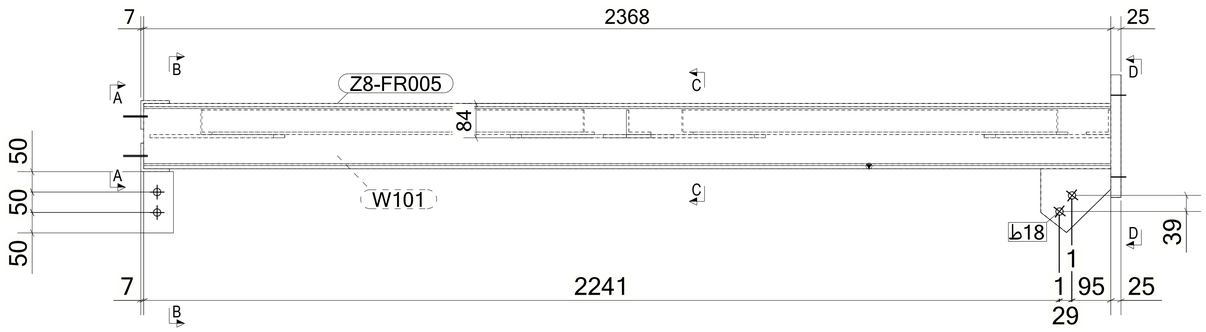

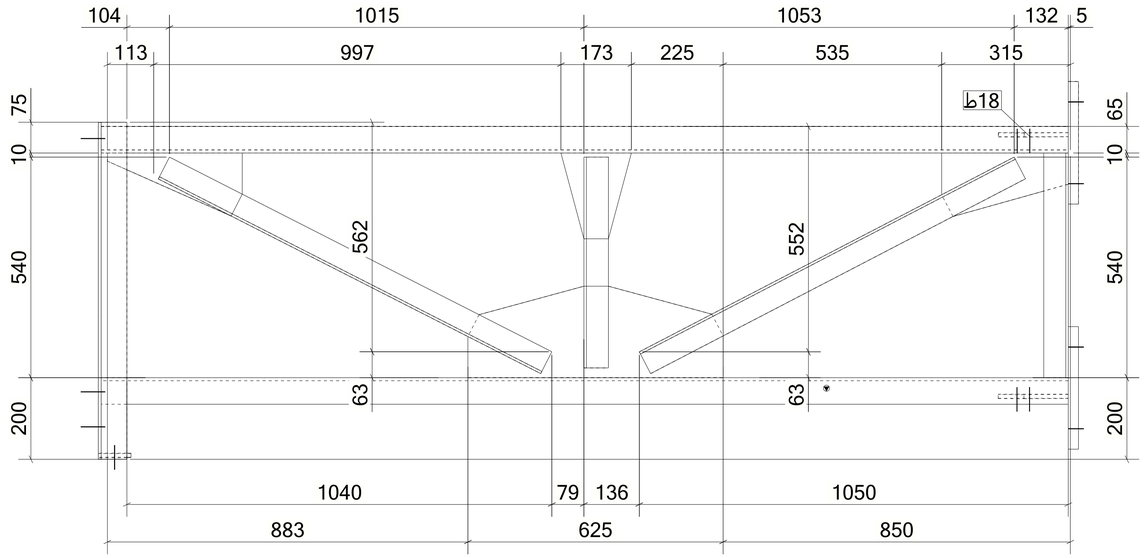

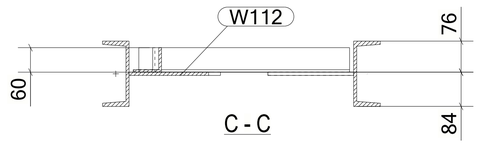

C - C

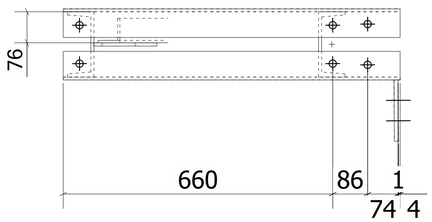

B - B

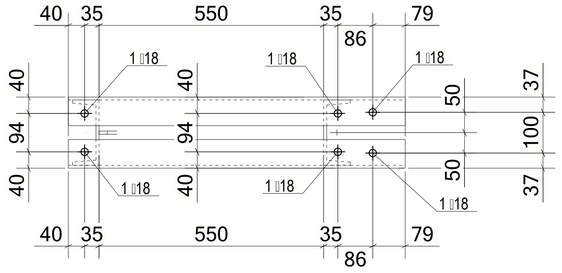

A - A

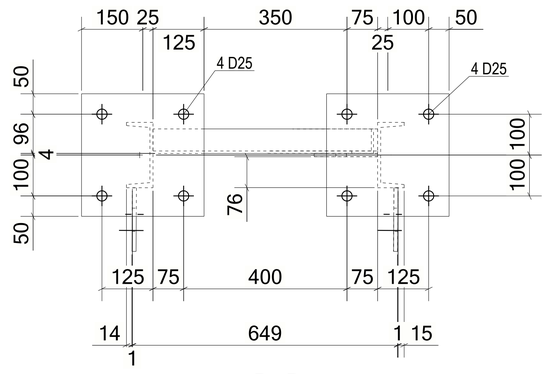

D - D

1 *REQUIRED AS DRAWN MARKED* **Z8-FR005**

MATERIAL LIST FOR ASSEMBLY MK'D **Z8-FR005**

Mark	Profile	GRADE	No.	Length	Area	Weight
Z8-FR005	UPN160	S235JR	1	2368	1.30	44.61
W101	UPN160	S235JR	1	2368	1.30	44.61
W103	L60*6	S235JR	1	550	0.13	2.95
W104	L70*7	S235JR	1	825	0.23	6.03
W105	L60*6	S235JR	1	516	0.13	2.77
W106	L60*6	S235JR	1	1034	0.25	5.55
W107	L60*6	S235JR	1	1051	0.25	5.64
W111	L70*7	S235JR	1	825	0.23	6.03
W112	PL8*223.9	S355JR	1	625	0.25	7.35
W113	PL25*300	S355JR	1	300	0.21	17.66
W114	PL8*166.7	S355JR	1	233	0.05	1.53
W130	PL8*155.4	S355JR	1	310	0.08	2.28
W131	PL8*154.2	S355JR	1	330	0.07	1.87
W134	PL25*300	S355JR	1	300	0.21	17.66
W269	PL10*155.9	S355JR	2	171	0.04	1.52
W793	PL10*80	S355JR	1	150	0.03	0.94
				Total	4.82	170.56

BOLT LIST:-

BOLT \ STUD	BOLT DESCRIPTION	QTY	FINISH

6 October Monorail
Engineering Unit
Valid For Construction

GENERAL NOTES:

1. THE DIMENSIONS SHOWN ARE NOMINAL (IN MILLIMETERS), U.N.O.
2. WELD SIZESHALL BE AISC MINIMUM OF 6 mm UNLESS NOTED OTHERWISE.
3. ALL FIELD WELDS SHALL BE INSPECTED PER QUALITY ASSURANCE AND SPECIAL INSPECTIONS.

REFERENCE DRAWINGS

1	93M-BOA-NAT-LOT-04833
2	93M-BOA-NAT-LOT-09170
3	93M-BOA-NAT-LOT-01976
4	93M-BOA-NAT-LOT-20021
5	
6	
7	
8	
9	

6TH OF OCTOBER CITY RAIL TRANSIT MONORAIL

The Authority — Hill International Consultant — Main Contractor — Structural Designer

KEY PLAN:

SCALE	SHOPDRAWING	DATE
AS SHOWN		12/05/2023

REV	DATE	DSG.	CHK.	APP.	AMENDMENTS	STATUS
B	12/05/2023	M.KH	M.KH	DR.M.M	ISSUED FOR INFORMATION	IFI
A	11/20/2022	M.KH	M.KH	DR.M.M	ISSUED FOR INFORMATION	IFI

DRAWING TITLE
6TH OF OCTOBER MONORAIL
SERVICE WALKWAYS
ZONE (1008)
Z8-FR005

Project Code	Rubric	Initiator	Lot	Ref	Number	Revision
93M	047	6ACC	60DE	PDWG	081844	B

Tekla structures

Same comments as
93M-0476-ACC-60DEP-DWG-08180-B.

REVIEWED WITH COMMENT
MONORAILS PROJECT

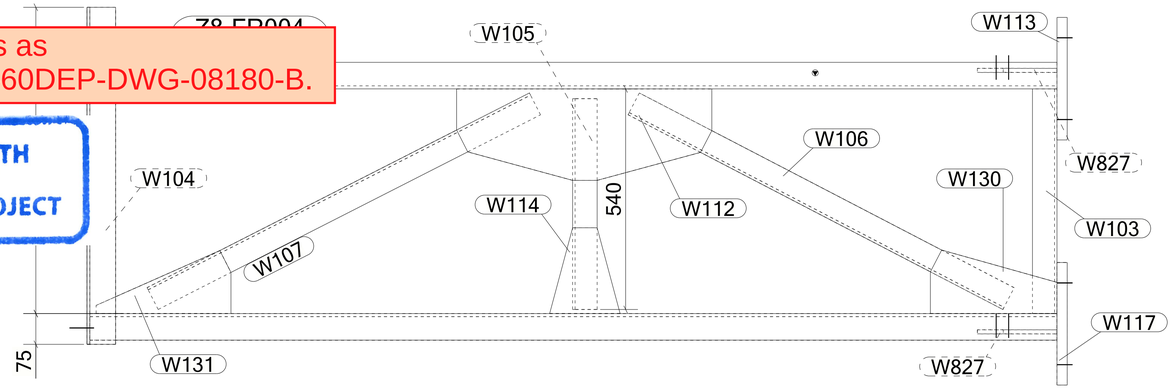

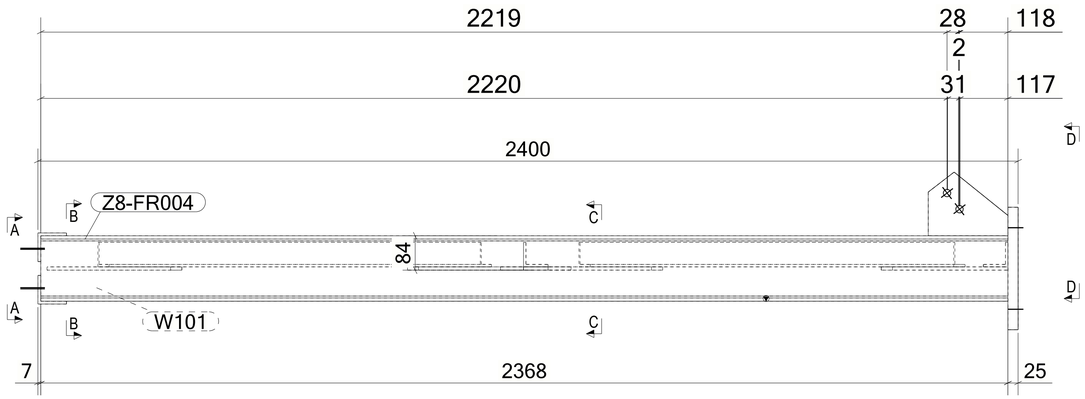

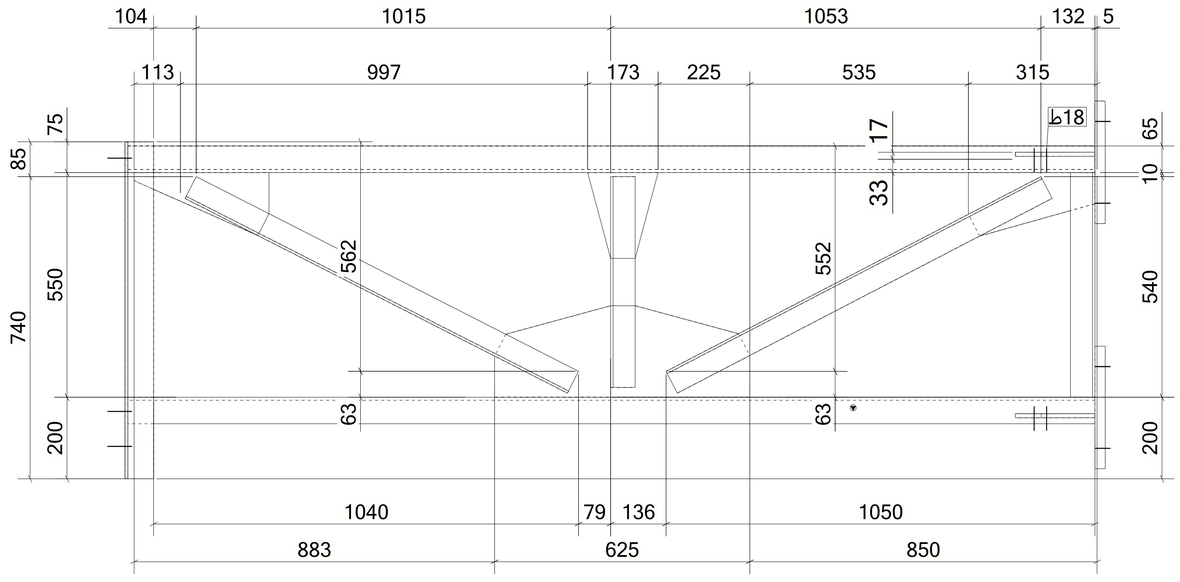

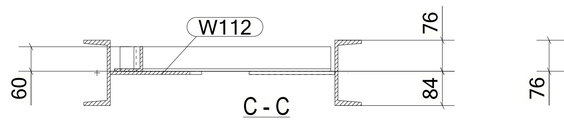

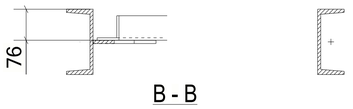

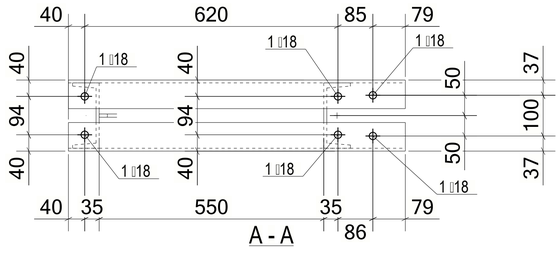

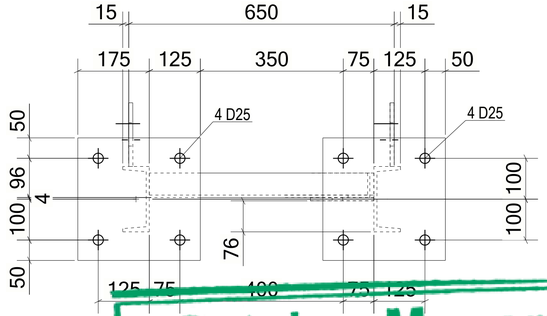

MATERIAL LIST FOR ASSEMBLY MK'D **Z8-FR004**						
Mark	Profile	GRADE	No.	Length	Area	Weight
Z8-FR004	UPN160	S235JR	1	2368	1.30	44.61
W101	UPN160	S235JR	1	2368	1.30	44.61
W103	L60*6	S235JR	1	550	0.13	2.95
W104	L70*7	S235JR	1	825	0.23	6.03
W105	L60*6	S235JR	1	516	0.13	2.77
W106	L60*6	S235JR	1	1034	0.25	5.55
W107	L60*6	S235JR	1	1051	0.25	5.64
W111	L70*7	S235JR	1	825	0.23	6.03
W112	PL8*223.9	S355JR	1	625	0.25	7.35
W113	PL25*300	S355JR	1	300	0.21	17.66
W114	PL8*166.7	S355JR	1	233	0.05	1.53
W117	PL25*300	S355JR	1	300	0.21	17.66
W130	PL8*155.4	S355JR	1	310	0.08	2.28
W131	PL8*154.2	S355JR	1	330	0.07	1.87
W827	PL10*156	S355JR	2	195	0.05	1.72
				Total	4.80	170.00

BOLT LIST:-

BOLT \ STUD	BOLT DESCRIPTION	QTY	FINISH

1 *REQUIRED AS DRAWN MARKED* **Z8-FR004**

GENERAL NOTES:

1. THE DIMENSIONS SHOWN ARE NOMINAL (IN MILLIMETERS), U.N.O.
2. WELD SIZESHALL BE AISC MINIMUM OF 6 mm UNLESS NOTED OTHERWISE.
3. ALL FIELD WELDS SHALL BE INSPECTED PER QUALITY ASSURANCE AND SPECIAL INSPECTIONS.

REFERENCE DRAWINGS

1	93M-BOA-NAT-LOT-04833
2	93M-BOA-NAT-LOT-09170
3	93M-BOA-NAT-LOT-01976
4	93M-BOA-NAT-LOT-20021
5	
6	
7	
8	
9	

6TH OF OCTOBER CITY RAIL TRANSIT MONORAIL

The Authority | Consultant: Hill International | Main Contractor: ORASCOM CONSTRUCTION / BOMBARDIER | Structural Designer: INNOVA TRANSPORTATION

KEY PLAN:

6 October Monorail
Engineering Unit
Valid For Construction

SCALE	SHOPDRAWING	DATE
AS SHOWN		12/05/2023

REV	DATE	DSG.	CHK.	APP.	AMENDMENTS	STATUS
B	12/05/2023	M.KH	M.KH	DR.M.M	ISSUED FOR INFORMATION	IFI
A	11/20/2022	M.KH	M.KH	DR.M.M	ISSUED FOR INFORMATION	IFI

DRAWING TITLE
6TH OF OCTOBER MONORAIL
SERVICE WALKWAYS
ZONE (1008)
Z8-FR004

Project Code	Rubric	Initiator	Lot	Ref	Number	Revision
93M	047	6ACC	60	DEP	DWG0818	B

Tekla structures

Same comments as
93M-0476-ACC-60DEP-DWG-08180-B.

REVIEWED WITH COMMENT
MONORAILS PROJECT

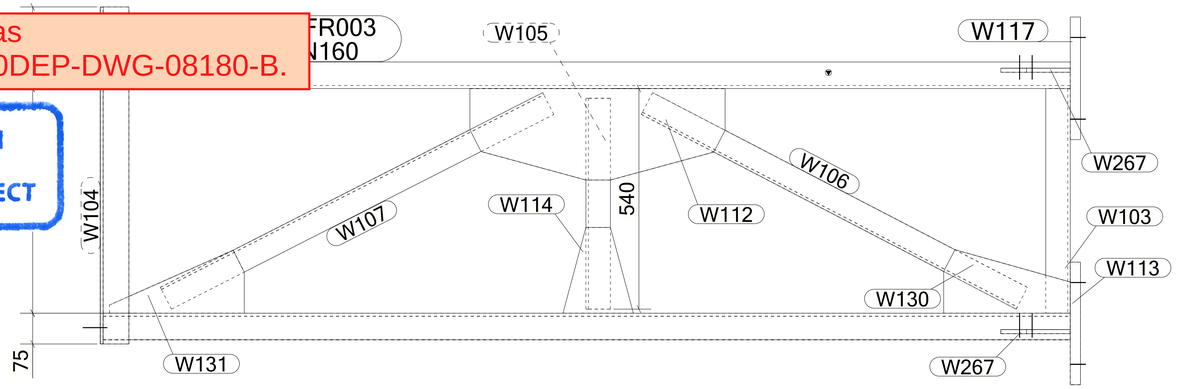

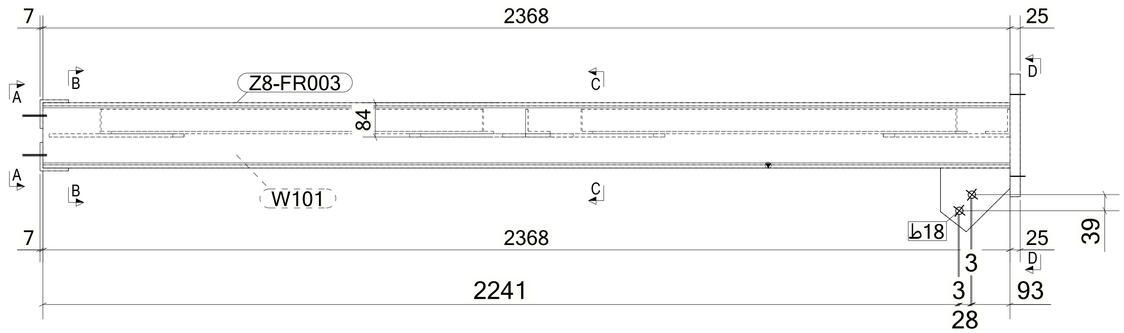

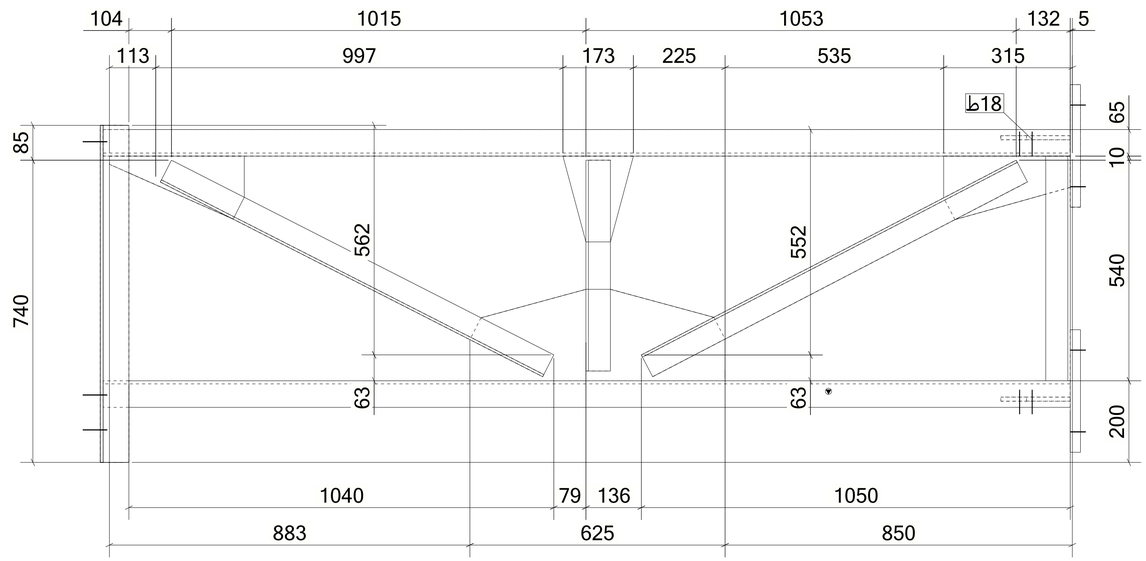

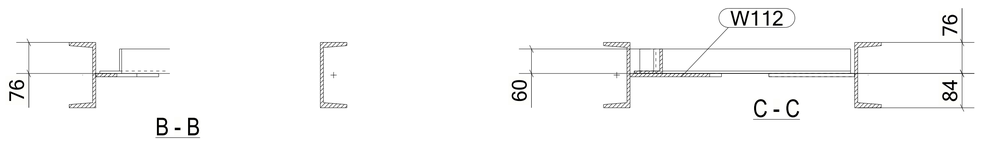

B - B

C - C

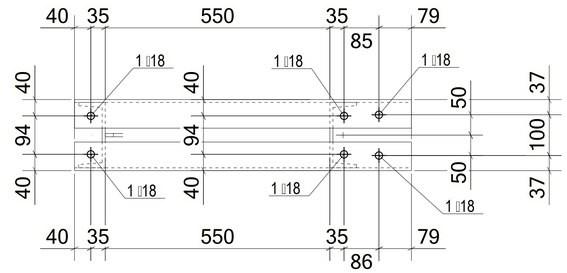

A - A

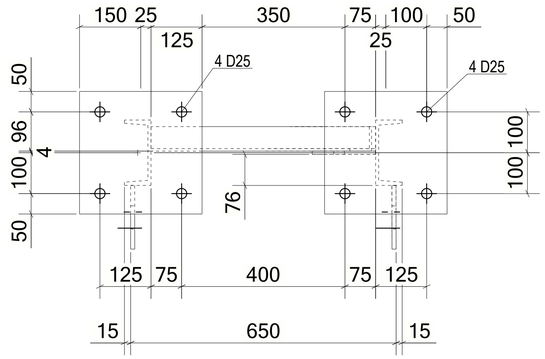

D - D

MATERIAL LIST FOR ASSEMBLY MK'D **Z8-FR003**

Mark	Profile	GRADE	No.	Length	Area	Weight
Z8-FR003	UPN160	S235JR	1	2368	1.30	44.61
W101	UPN160	S235JR	1	2368	1.30	44.61
W103	L60*6	S235JR	1	550	0.13	2.95
W104	L70*7	S235JR	1	825	0.23	6.03
W105	L60*6	S235JR	1	516	0.13	2.77
W106	L60*6	S235JR	1	1034	0.25	5.55
W107	L60*6	S235JR	1	1051	0.25	5.64
W111	L70*7	S235JR	1	825	0.23	6.03
W112	PL8*223.9	S355JR	1	625	0.25	7.35
W113	PL25*300	S355JR	1	300	0.21	17.66
W114	PL8*166.7	S355JR	1	233	0.05	1.53
W117	PL25*300	S355JR	1	300	0.21	17.66
W130	PL8*155.4	S355JR	1	310	0.08	2.28
W131	PL8*154.2	S355JR	1	330	0.07	1.87
W267	PL10*155.9	S355JR	2	170	0.04	1.52
				Total	4.79	169.60

BOLT LIST:-

BOLT \ STUD	BOLT DESCRIPTION	QTY	FINISH

1 *REQUIRED AS DRAWN MARKED* **Z8-FR003**

GENERAL NOTES:

1. THE DIMENSIONS SHOWN ARE NOMINAL (IN MILLIMETERS), U.N.O.
2. WELD SIZESHALL BE AISC MINIMUM OF 6 mm UNLESS NOTED OTHERWISE.
3. ALL FIELD WELDS SHALL BE INSPECTED PER QUALITY ASSURANCE AND SPECIAL INSPECTIONS.

REFERENCE DRAWINGS

1	93M-BOA-NAT-LOT-04833
2	93M-BOA-NAT-LOT-09170
3	93M-BOA-NAT-LOT-01976
4	93M-BOA-NAT-LOT-20021
5	
6	
7	
8	
9	

6TH OF OCTOBER CITY RAIL TRANSIT MONORAIL

The Authority | Consultant: Hill International | Main Contractor: ORASCOM CONSTRUCTION / BOMBARDIER / Cie Arab Contractors | Structural Designer: INNOVA TRANSPORTATION

KEY PLAN:

6 October Monorail
Engineering Unit
Valid For Construction

SCALE: AS SHOWN | SHOPDRAWING | DATE: 12/05/2023

REV	DATE	DSG.	CHK.	APP.	AMENDMENTS	STATUS
B	12/05/2023	M.KH	M.KH	DR.M.M	ISSUED FOR INFORMATION	IFI
A	11/20/2022	M.KH	M.KH	DR.M.M	ISSUED FOR INFORMATION	IFI

DRAWING TITLE
6TH OF OCTOBER MONORAIL
SERVICE WALKWAYS
ZONE (1008)
Z8-FR003

Project Code	Rubric	Initiator	Lot	Ref	Number	Revision
93M	0476	ACC	60DEP	DWG	08182	B

Tekla structures

Same comments as
93M-0476-ACC-60DEP-DWG-08180-B.

REVIEWED WITH COMMENT
MONORAILS PROJECT

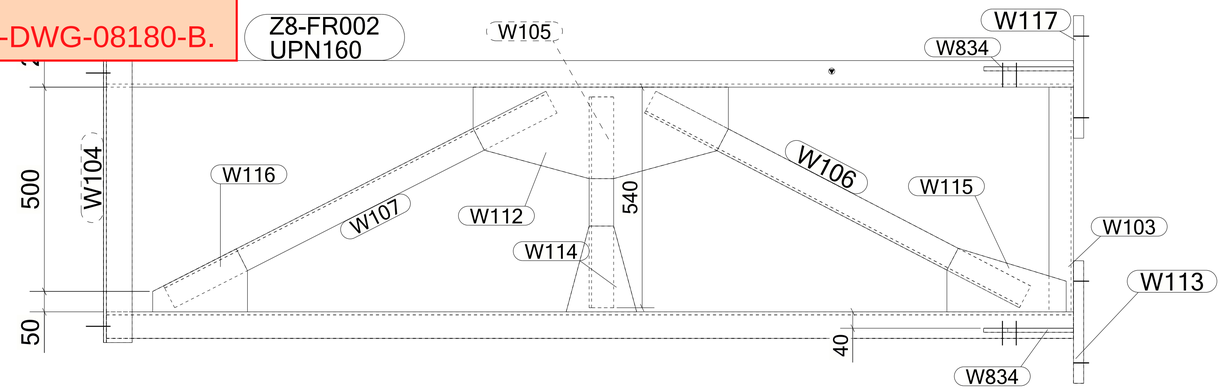

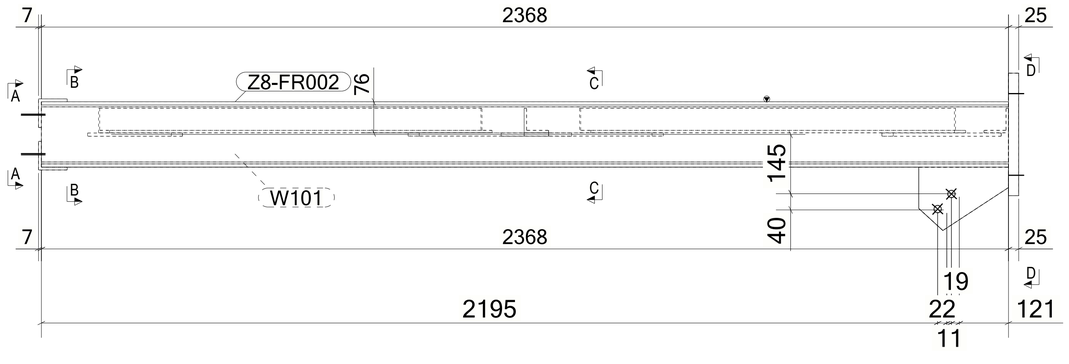

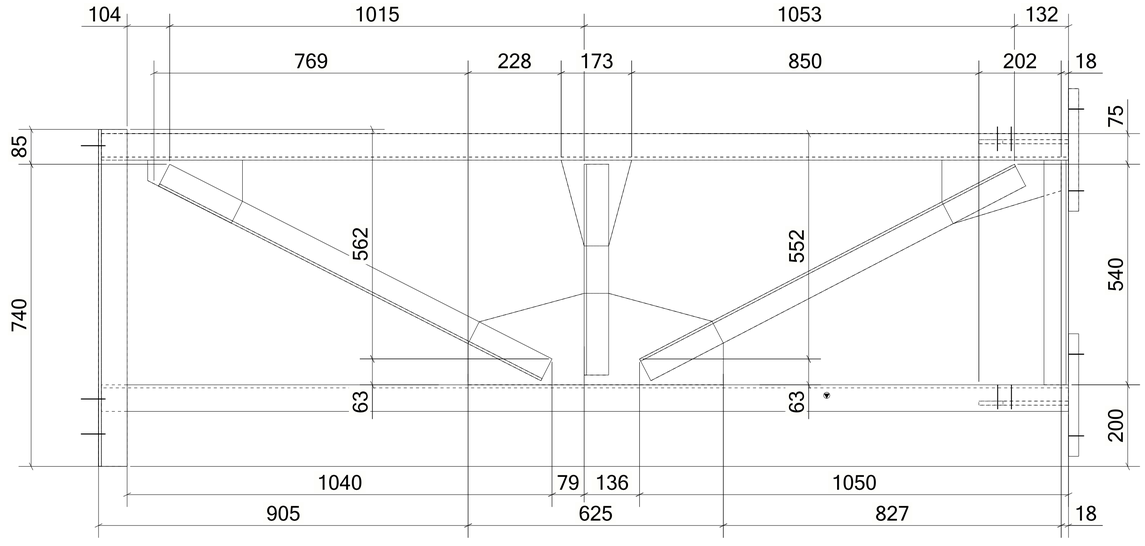

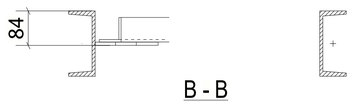

B - B

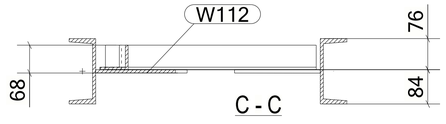

C - C

A - A

D - D

MATERIAL LIST FOR ASSEMBLY MK'D **Z8-FR002**

Mark	Profile	GRADE	No.	Length	Area	Weight
Z8-FR002	UPN160	S235JR	1	2368	1.30	44.61
W101	UPN160	S235JR	1	2368	1.30	44.61
W103	L60*6	S235JR	1	550	0.13	2.95
W104	L70*7	S235JR	1	825	0.23	6.03
W105	L60*6	S235JR	1	516	0.13	2.77
W106	L60*6	S235JR	1	1034	0.25	5.55
W107	L60*6	S235JR	1	1050	0.25	5.64
W111	L70*7	S235JR	1	825	0.23	6.03
W112	PL8*223.9	S355JR	1	625	0.25	7.35
W113	PL25*300	S355JR	1	300	0.21	17.66
W114	PL8*166.7	S355JR	1	233	0.05	1.53
W115	PL8*155.4	S355JR	1	292	0.07	2.14
W116	PL8*154.2	S355JR	1	232	0.05	1.53
W117	PL25*300	S355JR	1	300	0.21	17.66
W834	PL10*155.2	S355JR	2	220	0.05	1.89
				Total	4.79	169.86

BOLT LIST:-

BOLT \ STUD	BOLT DESCRIPTION	QTY	FINISH

1 *REQUIRED AS DRAWN MARKED* **Z8-FR002**

6 October Monorail
Engineering Unit
Valid For Construction

GENERAL NOTES:

1. THE DIMENSIONS SHOWN ARE NOMINAL (IN MILLIMETERS), U.N.O.
2. WELD SIZESHALL BE AISC MINIMUM OF 6 mm UNLESS NOTED OTHERWISE.
3. ALL FIELD WELDS SHALL BE INSPECTED PER QUALITY ASSURANCE AND SPECIAL INSPECTIONS.

REFERENCE DRAWINGS

1	93M-BOA-NAT-LOT-04833
2	93M-BOA-NAT-LOT-09170
3	93M-BOA-NAT-LOT-01976
4	93M-BOA-NAT-LOT-20021
5	
6	
7	
8	
9	

6TH OF OCTOBER CITY RAIL TRANSIT MONORAIL

The Authority | Consultant: Hill International | Main Contractor: ORASCOM / BOMBARDIER | Structural Designer: INNOVA TRANSPORTATION

KEY PLAN:

SCALE	SHOPDRAWING	DATE
AS SHOWN		12/05/2023

REV	DATE	DSG.	CHK.	APP.	AMENDMENTS	STATUS
B	12/05/2023	M.KH	M.KH	DR.M.M	ISSUED FOR INFORMATION	IFI
A	11/20/2022	M.KH	M.KH	DR.M.M	ISSUED FOR INFORMATION	IFI

DRAWING TITLE
6TH OF OCTOBER MONORAIL
SERVICE WALKWAYS
ZONE (1008)
Z8-FR002

Project Code	Rubric	Initiator	Lot	Ref	Number	Revision
93M	047	6ACC	60DEP	DWG	08181	B

Tekla structures

1-These connections are not matching with the design drawings , Please provide us the calculation notes For mentioned connections.

REVIEWED WITH COMMENT MONORAILS PROJECT

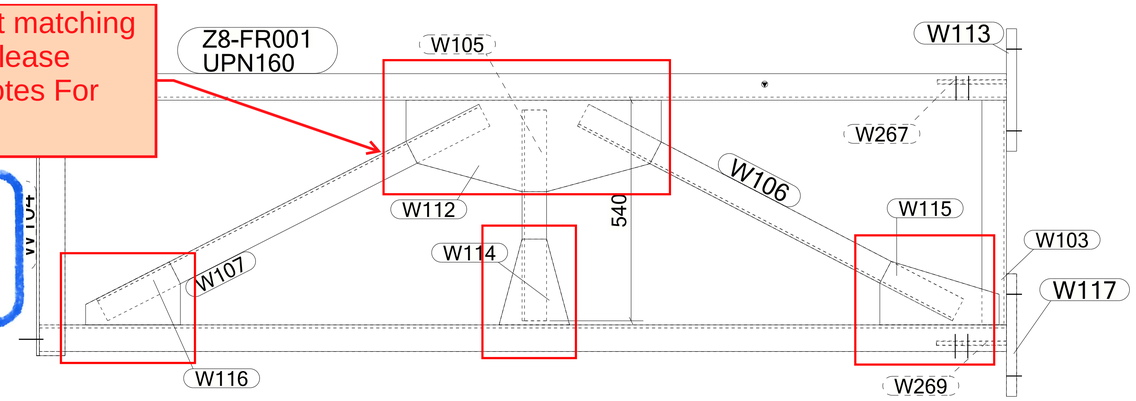

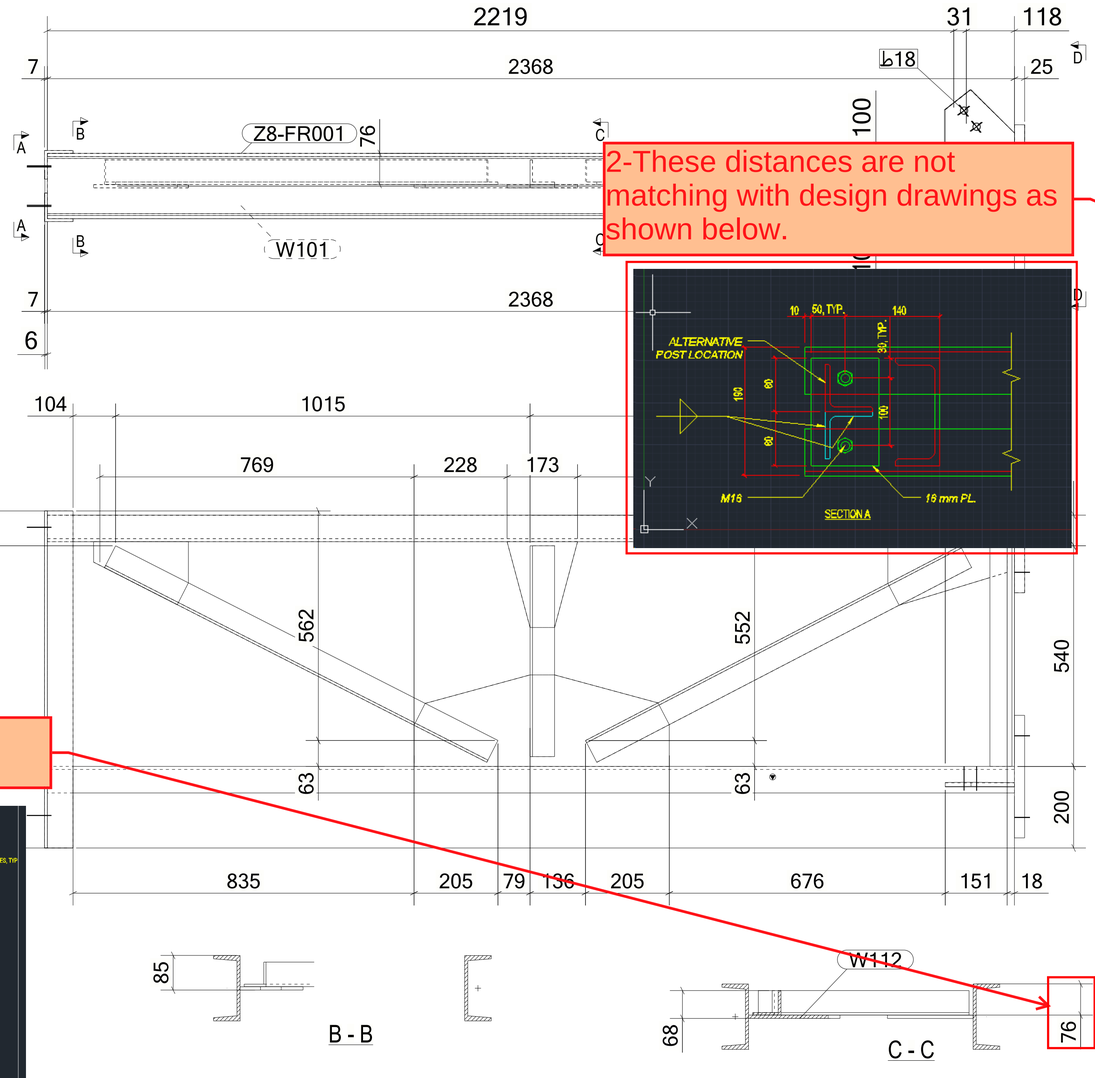

2-These distances are not matching with design drawings as shown below.

3-Should be 103mm as shown in design drawings.

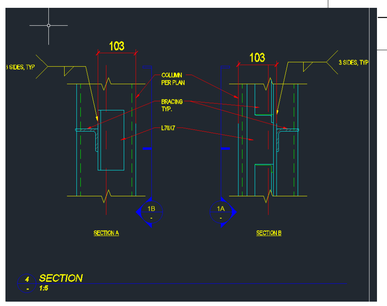

1 *REQUIRED AS DRAWN MARKED* **Z8-FR001**

MATERIAL LIST FOR ASSEMBLY MK'D **Z8-FR001**

Mark	Profile	GRADE	No.	Length	Area	Weight
Z8-FR001	UPN160	S235JR	1	2368	1.30	44.61
W101	UPN160	S235JR	1	2368	1.30	44.61
W103	L60*6	S235JR	1	550	0.13	2.95
W104	L70*7	S235JR	1	825	0.23	6.03
W105	L60*6	S235JR	1			
W106	L60*6	S235JR	1			
W107	L60*6	S235JR	1			
W111	L70*7	S235JR	1	825	0.23	6.03
W112	PL8*223.9	S355JR	1			
W113	PL25*300	S355JR	1			
W114	PL8*166.7	S355JR	1			
W115	PL8*155.4	S355JR	1			
W116	PL8*154.2	S355JR	1			
W117	PL25*300	S355JR	1			
W267	PL10*155.9	S355JR	1			
W269	PL10*155.9	S355JR	1	171	0.04	1.53
				Total	4.77	169.12

4-These plates should be L100*10 as shown in design drawings.

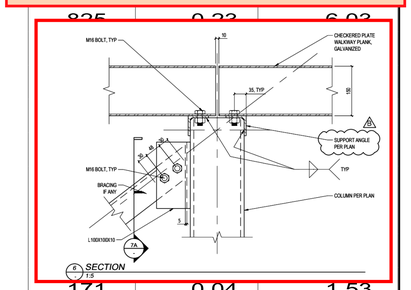

BOLT LIST:-

BOLT \ STUD	BOLT DESCRIPTION	QTY	FINISH

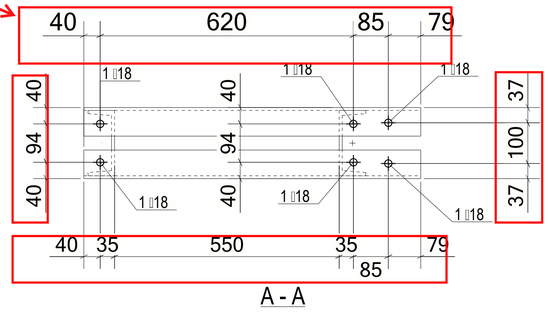

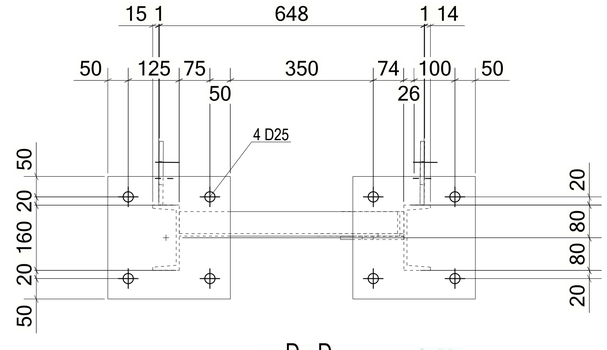

6 October Monorail
Engineering Unit
Valid For Construction

GENERAL NOTES:

1. THE DIMENSIONS SHOWN ARE NOMINAL (IN MILLIMETERS), U.N.O.
2. WELD SIZESHALL BE AISC MINIMUM OF 6 mm UNLESS NOTED OTHERWISE.
3. ALL FIELD WELDS SHALL BE INSPECTED PER QUALITY ASSURANCE AND SPECIAL INSPECTIONS.

REFERENCE DRAWINGS

1	93M-BOA-NAT-LOT-04833
2	93M-BOA-NAT-LOT-09170
3	93M-BOA-NAT-LOT-01976
4	93M-BOA-NAT-LOT-20021
5	
6	
7	
8	
9	

6TH OF OCTOBER CITY RAIL TRANSIT MONORAIL

The Authority | Consultant: Hill International | Main Contractor: ORASCOM CONSTRUCTION / BOMBARDIER | Structural Designer: INNOVA TRANSPORTATION

KEY PLAN:

SCALE	SHOPDRAWING	DATE
AS SHOWN		12/05/2023

REV	DATE	DSG.	CHK.	APP.	AMENDMENTS	STATUS
B	12/05/2023	M.KH	M.KH	DR.M.M	ISSUED FOR INFORMATION	IFI
A	11/20/2022	M.KH	M.KH	DR.M.M	ISSUED FOR INFORMATION	IFI

DRAWING TITLE
6TH OF OCTOBER MONORAIL SERVICE WALKWAYS ZONE (1008)
Z8-FR001

Project Code	Rubric	Initiator	Lot	Ref	Number	Revision
93M	047	ACC	60DEP	DWG	08180	B

Tekla structures

Same comments as
93M-0476-ACC-60DEP-DWG-08079-B.

REVIEWED WITH COMMENT
MONORAILS PROJECT

MATERIAL LIST FOR ASSEMBLY MK'D **Z8-CHQ101**

Mark	Profile	GRADE	No.	Length	Area	Weight
Z8-CHQ101	CHQD_PL5*917.1	S235JR	1	1300	2.23	43.31
				Total	2.23	43.31

BOLT LIST:-

BOLT \ STUD	BOLT DESCRIPTION		QTY	FINISH
BOLT	B1N2W 16 X 40	A325M	1	
BOLT	B1N2W 16 X 50	A325M	3	

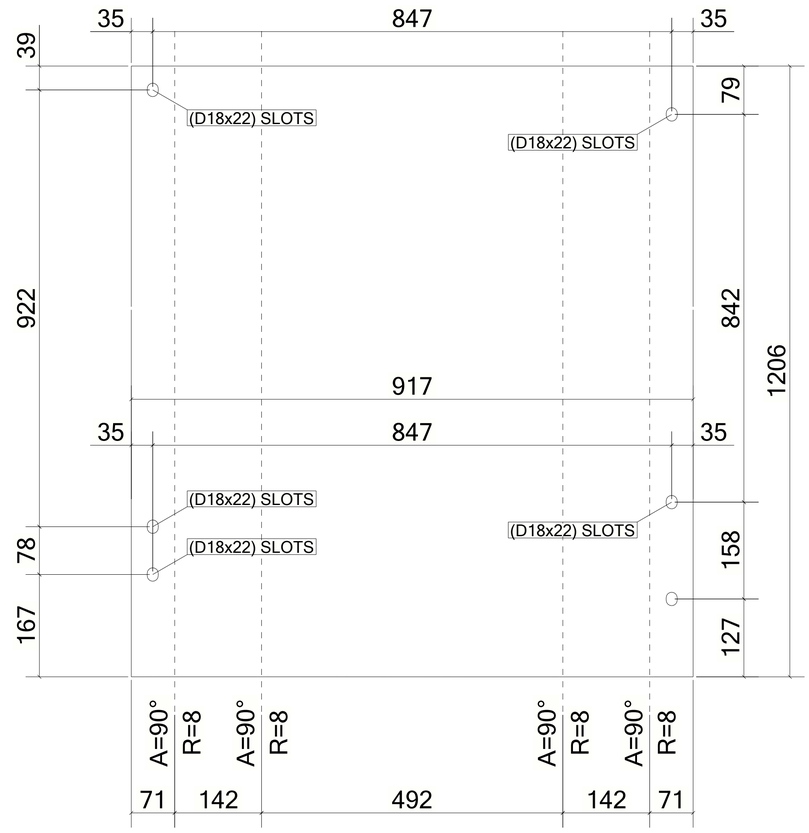

UNFOLDED VIEW

1 *REQUIRED AS DRAWN MARKED* **Z8-CHQ101**

6 October Monorail
Engineering Unit
Valid For Construction

GENERAL NOTES:

1. THE DIMENSIONS SHOWN ARE NOMINAL (IN MILLIMETERS), U.N.O.
2. WELD SIZESHALL BE AISC MINIMUM OF 6 mm UNLESS NOTED OTHERWISE.
3. ALL FIELD WELDS SHALL BE INSPECTED PER QUALITY ASSURANCE AND SPECIAL INSPECTIONS.

REFERENCE DRAWINGS

1	93M-BOA-NAT-LOT-04833
2	93M-BOA-NAT-LOT-09170
3	93M-BOA-NAT-LOT-01976
4	93M-BOA-NAT-LOT-20021
5	
6	
7	
8	
9	

6TH OF OCTOBER CITY RAIL TRANSIT MONORAIL

The Authority | Consultant: Hill International | Main Contractor: ORASCOM CONSTRUCTION, BOMBARDIER | Structural Designer: INNOVA TRANSPORTATION

KEY PLAN:

SCALE	SHOPDRAWING	DATE
AS SHOWN		12/05/2023

REV	DATE	DSG.	CHK.	APP.	AMENDMENTS	STATUS
B	12/05/2023	M.KH	M.KH	DR.M.M	ISSUED FOR INFORMATION	IFI
A	11/20/2022	M.KH	M.KH	DR.M.M	ISSUED FOR INFORMATION	IFI

DRAWING TITLE
6TH OF OCTOBER MONORAIL
SERVICE WALKWAYS
ZONE (1008)
Z8-CHQ101

Project Code	Rubric	Initiator	Lot	Ref	Number	Revision
93M	047	6ACC	60DE	PDWG	08179	B

Tekla structures

Same comments as
93M-0476-ACC-60DEP-DWG-08079-B.

REVIEWED WITH COMMENT
MONORAILS PROJECT

MATERIAL LIST FOR ASSEMBLY MK'D **Z8-CHQ100**

Mark	Profile	GRADE	No.	Length	Area	Weight
Z8-CHQ100	CHQD_PL5*917.1	S235JR	1	1300	2.23	43.30
				Total	2.23	43.30

BOLT LIST:-

BOLT \ STUD	BOLT DESCRIPTION		QTY	FINISH
BOLT	B1N2W 16 X 40	A325M	3	
BOLT	B1N2W 16 X 50	A325M	3	

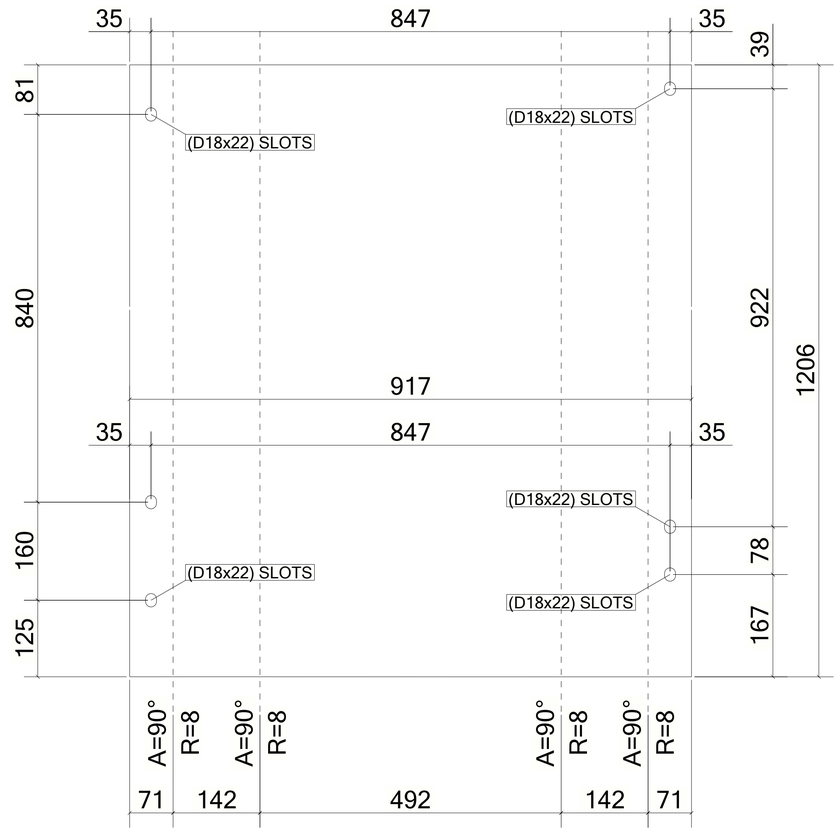

UNFOLDED VIEW

1 *REQUIRED AS DRAWN MARKED* **Z8-CHQ100**

6 October Monorail
Engineering Unit
Valid For Construction

GENERAL NOTES:

1. THE DIMENSIONS SHOWN ARE NOMINAL (IN MILLIMETERS), U.N.O.
2. WELD SIZESHALL BE AISC MINIMUM OF 6 mm UNLESS NOTED OTHERWISE.
3. ALL FIELD WELDS SHALL BE INSPECTED PER QUALITY ASSURANCE AND SPECIAL INSPECTIONS.

REFERENCE DRAWINGS

1	93M-BOA-NAT-LOT-04833
2	93M-BOA-NAT-LOT-09170
3	93M-BOA-NAT-LOT-01976
4	93M-BOA-NAT-LOT-20021
5	
6	
7	
8	
9	

6TH OF OCTOBER CITY RAIL TRANSIT MONORAIL

The Authority | Hill International Consultant | ORASCOM CONSTRUCTION BOMBARDIER Main Contractor | INNOVA TRANSPORTATION Structural Designer

KEY PLAN:

SCALE	SHOPDRAWING	DATE
AS SHOWN		12/05/2023

REV	DATE	DSG.	CHK.	APP.	AMENDMENTS	STATUS
B	12/05/2023	M.KH	M.KH	DR.M.M	ISSUED FOR INFORMATION	IFI
A	11/20/2022	M.KH	M.KH	DR.M.M	ISSUED FOR INFORMATION	IFI

DRAWING TITLE
6TH OF OCTOBER MONORAIL
SERVICE WALKWAYS
ZONE (1008)
Z8-CHQ100

Project Code	Rubric	Initiator	Lot	Ref	Number	Revision
93M	047	ACC	60	DEP	DWG 08178	B

Tekla structures

Same comments as
93M-0476-ACC-60DEP-DWG-08079-B.

REVIEWED WITH COMMENT
MONORAILS PROJECT

MATERIAL LIST FOR ASSEMBLY MK'D **Z8-CHQ099**

Mark	Profile	GRADE	No.	Length	Area	Weight
Z8-CHQ099	CHQD_PL5*917.1	S235JR	1	1500	2.47	48.03
				Total	2.47	48.03

BOLT LIST:-

BOLT \ STUD	BOLT DESCRIPTION		QTY	FINISH
BOLT	B1N2W16 X 40	A325M	3	
BOLT	B1N2W16 X 50	A325M	2	

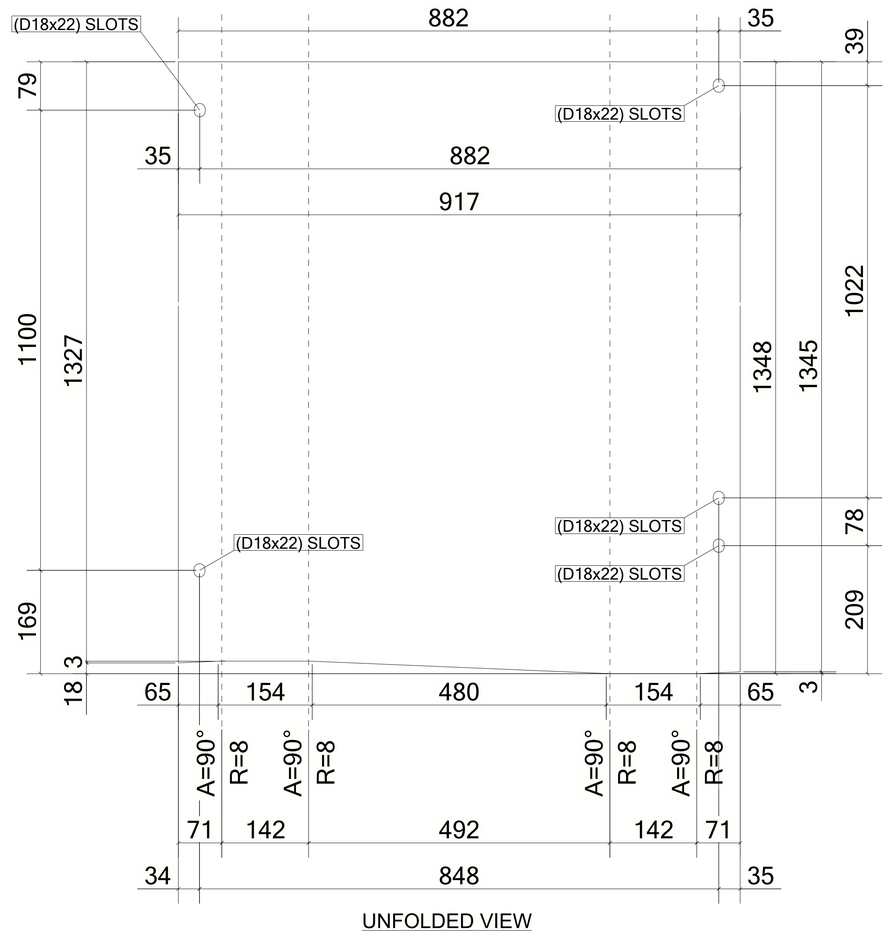

UNFOLDED VIEW

1 *REQUIRED AS DRAWN MARKED* **Z8-CHQ099**

6 October Monorail
Engineering Unit
Valid For Construction

GENERAL NOTES:

1. THE DIMENSIONS SHOWN ARE NOMINAL (IN MILLIMETERS), U.N.O.
2. WELD SIZESHALL BE AISC MINIMUM OF 6 mm UNLESS NOTED OTHERWISE.
3. ALL FIELD WELDS SHALL BE INSPECTED PER QUALITY ASSURANCE AND SPECIAL INSPECTIONS.

REFERENCE DRAWINGS

1	93M-BOA-NAT-LOT-04833
2	93M-BOA-NAT-LOT-09170
3	93M-BOA-NAT-LOT-01976
4	93M-BOA-NAT-LOT-20021
5	
6	
7	
8	
9	

6TH OF OCTOBER CITY RAIL TRANSIT MONORAIL

The Authority | Hill International Consultant | Main Contractor | Structural Designer

KEY PLAN:

SCALE: AS SHOWN | SHOPDRAWING | DATE: 12/05/2023

REV	DATE	DSG.	CHK.	APP.	AMENDMENTS	STATUS
B	12/05/2023	M.KH	M.KH	DR.M.M	ISSUED FOR INFORMATION	IFI
A	11/20/2022	M.KH	M.KH	DR.M.M	ISSUED FOR INFORMATION	IFI

DRAWING TITLE
6TH OF OCTOBER MONORAIL
SERVICE WALKWAYS
ZONE (1008)
Z8-CHQ099

Project Code	Rubric	Initiator	Lot	Ref	Number	Revision
93M	047	6ACC	60DEP	DWG	08177	B

Tekla structures

Same comments as
93M-0476-ACC-60DEP-DWG-08079-B.

REVIEWED WITH COMMENT
MONORAILS PROJECT

MATERIAL LIST FOR ASSEMBLY MK'D **Z8-CHQ098**

Mark	Profile	GRADE	No.	Length	Area	Weight
Z8-CHQ098	CHQD_PL5*917.1	S235JR	1	1500	2.51	48.78
				Total	2.51	48.78

BOLT LIST:-

BOLT \ STUD	BOLT DESCRIPTION		QTY	FINISH
BOLT	B1N2W16 X 40	A325M	3	
BOLT	B1N2W16 X 50	A325M	2	

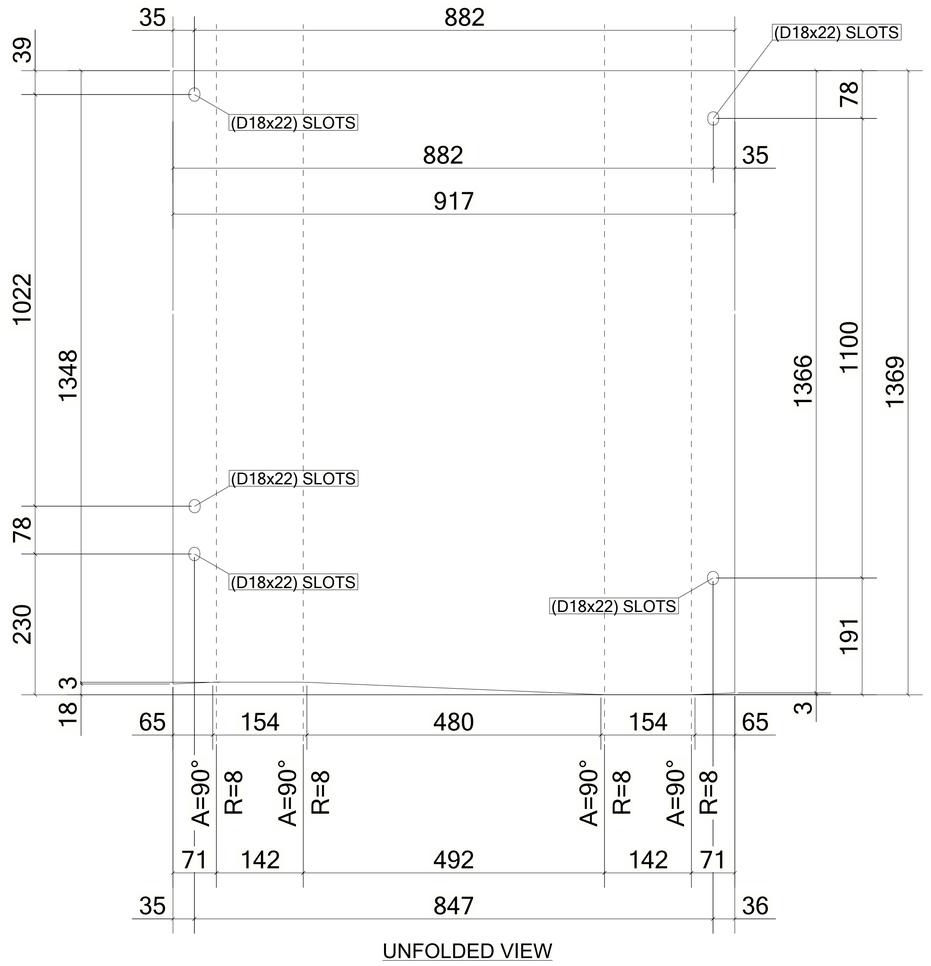

UNFOLDED VIEW

1 *REQUIRED AS DRAWN MARKED* **Z8-CHQ098**

6 October Monorail
Engineering Unit
Valid For Construction

GENERAL NOTES:

1. THE DIMENSIONS SHOWN ARE NOMINAL (IN MILLIMETERS), U.N.O.
2. WELD SIZESHALL BE AISC MINIMUM OF 6 mm UNLESS NOTED OTHERWISE.
3. ALL FIELD WELDS SHALL BE INSPECTED PER QUALITY ASSURANCE AND SPECIAL INSPECTIONS.

REFERENCE DRAWINGS

1	93M-BOA-NAT-LOT-04833
2	93M-BOA-NAT-LOT-09170
3	93M-BOA-NAT-LOT-01976
4	93M-BOA-NAT-LOT-20021
5	
6	
7	
8	
9	

6TH OF OCTOBER CITY RAIL TRANSIT MONORAIL

The Authority | Consultant: Hill International | Main Contractor: ORASCOM CONSTRUCTION, BOMBARDIER | Structural Designer: INNOVA TRANSPORTATION

KEY PLAN:

SCALE	SHOPDRAWING	DATE
AS SHOWN		12/05/2023

REV	DATE	DSG.	CHK.	APP.	AMENDMENTS	STATUS
B	12/05/2023	M.KH	M.KH	DR.M.M	ISSUED FOR INFORMATION	IFI
A	11/20/2022	M.KH	M.KH	DR.M.M	ISSUED FOR INFORMATION	IFI

DRAWING TITLE
6TH OF OCTOBER MONORAIL
SERVICE WALKWAYS
ZONE (1008)
Z8-CHQ098

Project Code	Rubric	Initiator	Lot	Ref	Number	Revision
93M	047	6ACC	60DE	PDWG	0817	6 B

Tekla structures

Same comments as
93M-0476-ACC-60DEP-DWG-08079-B.

REVIEWED WITH COMMENT
MONORAILS PROJECT

MATERIAL LIST FOR ASSEMBLY MK'D **Z8-CHQ097**

Mark	Profile	GRADE	No.	Length	Area	Weight
Z8-CHQ097	CHQD_PL5*917.1	S235JR	1	1170	2.17	42.02
				Total	2.17	42.02

BOLT LIST:-

BOLT \ STUD	BOLT DESCRIPTION	QTY	FINISH
BOLT	B1N2W16 X 50 A325M	2	

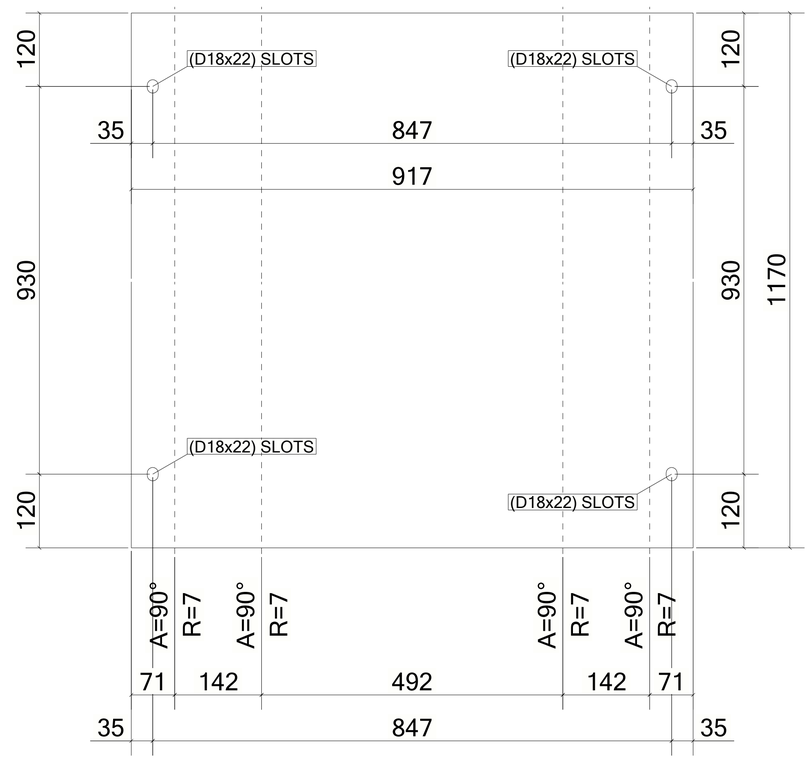

UNFOLDED VIEW

2 *REQUIRED AS DRAWN MARKED* **Z8-CHQ097**

6 October Monorail
Engineering Unit
Valid For Construction

GENERAL NOTES:

1. THE DIMENSIONS SHOWN ARE NOMINAL (IN MILLIMETERS), U.N.O.
2. WELD SIZESHALL BE AISC MINIMUM OF 6 mm UNLESS NOTED OTHERWISE.
3. ALL FIELD WELDS SHALL BE INSPECTED PER QUALITY ASSURANCE AND SPECIAL INSPECTIONS.

REFERENCE DRAWINGS

1	93M-BOA-NAT-LOT-04833
2	93M-BOA-NAT-LOT-09170
3	93M-BOA-NAT-LOT-01976
4	93M-BOA-NAT-LOT-20021
5	
6	
7	
8	
9	

6TH OF OCTOBER CITY RAIL TRANSIT MONORAIL

The Authority | Hill International Consultant | ORASCOM BOMBARDIER Main Contractor | INNOVA TRANSPORTATION Structural Designer

KEY PLAN:

SCALE	SHOPDRAWING	DATE
AS SHOWN		12/05/2023

REV	DATE	DSG.	CHK.	APP.	AMENDMENTS	STATUS
B	12/05/2023	M.KH	M.KH	DR.M.M	ISSUED FOR INFORMATION	IFI
A	11/20/2022	M.KH	M.KH	DR.M.M	ISSUED FOR INFORMATION	IFI

DRAWING TITLE
6TH OF OCTOBER MONORAIL
SERVICE WALKWAYS
ZONE (1008)
Z8-CHQ097

Project Code	Rubric	Initiator	Lot	Ref	Number	Revision
93M0476	ACC	60DEP	DWG	08175		B

Tekla structures

Same comments as
93M-0476-ACC-60DEP-DWG-08079-B.

REVIEWED WITH COMMENT
MONORAILS PROJECT

MATERIAL LIST FOR ASSEMBLY MK'D **Z8-CHQ096**

Mark	Profile	GRADE	No.	Length	Area	Weight
Z8-CHQ096	CHQD_PL5*917.1	S235JR	1	1500	2.77	53.87
				Total	2.77	53.87

BOLT LIST:-

BOLT \ STUD	BOLT DESCRIPTION		QTY	FINISH
BOLT	B1N2W16 X 40	A325M	2	
BOLT	B1N2W16 X 50	A325M	2	

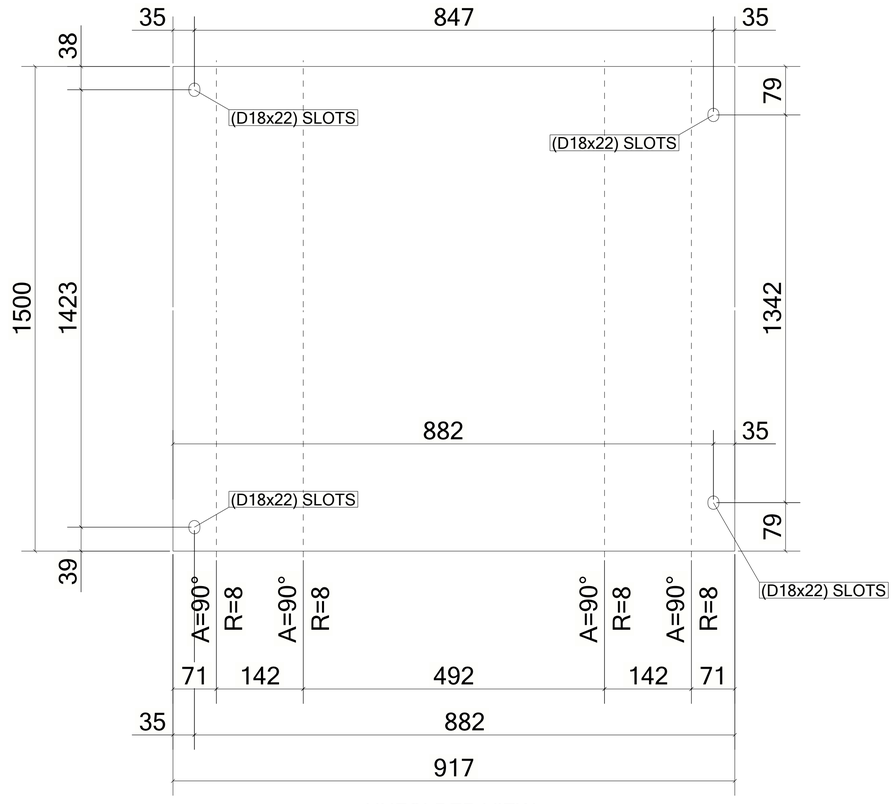

UNFOLDED VIEW

2 *REQUIRED AS DRAWN MARKED* **Z8-CHQ096**

6 October Monorail
Engineering Unit
Valid For Construction

GENERAL NOTES:

1. THE DIMENSIONS SHOWN ARE NOMINAL (IN MILLIMETERS), U.N.O.
2. WELD SIZESHALL BE AISC MINIMUM OF 6 mm UNLESS NOTED OTHERWISE.
3. ALL FIELD WELDS SHALL BE INSPECTED PER QUALITY ASSURANCE AND SPECIAL INSPECTIONS.

REFERENCE DRAWINGS

1	93M-BOA-NAT-LOT-04833
2	93M-BOA-NAT-LOT-09170
3	93M-BOA-NAT-LOT-01976
4	93M-BOA-NAT-LOT-20021
5	
6	
7	
8	
9	

6TH OF OCTOBER CITY RAIL TRANSIT MONORAIL

The Authority | Hill International Consultant | Main Contractor | Structural Designer

KEY PLAN:

SCALE	SHOPDRAWING	DATE
AS SHOWN		12/05/2023

REV	DATE	DSG.	CHK.	APP.	AMENDMENTS	STATUS
B	12/05/2023	M.KH	M.KH	DR.M.M	ISSUED FOR INFORMATION	IFI
A	11/20/2022	M.KH	M.KH	DR.M.M	ISSUED FOR INFORMATION	IFI

DRAWING TITLE
6TH OF OCTOBER MONORAIL
SERVICE WALKWAYS
ZONE (1008)
Z8-CHQ096

Project Code	Rubric	Initiator	Lot	Ref	Number	Revision
93M	047	ACC	60DEP	DWG	08174	B

Tekla structures

Same comments as
93M-0476-ACC-60DEP-DWG-08079-B.

REVIEWED WITH
COMMENT
MONORAILS PROJECT

MATERIAL LIST FOR ASSEMBLY MK'D **Z8-CHQ095**

Mark	Profile	GRADE	No.	Length	Area	Weight
Z8-CHQ095	CHQD_PL5*917.1	S235JR	1	1500	2.77	53.87
				Total	2.77	53.87

BOLT LIST:-

BOLT \ STUD	BOLT DESCRIPTION		QTY	FINISH
BOLT	B1N2W16 X 40	A325M	2	
BOLT	B1N2W16 X 50	A325M	2	

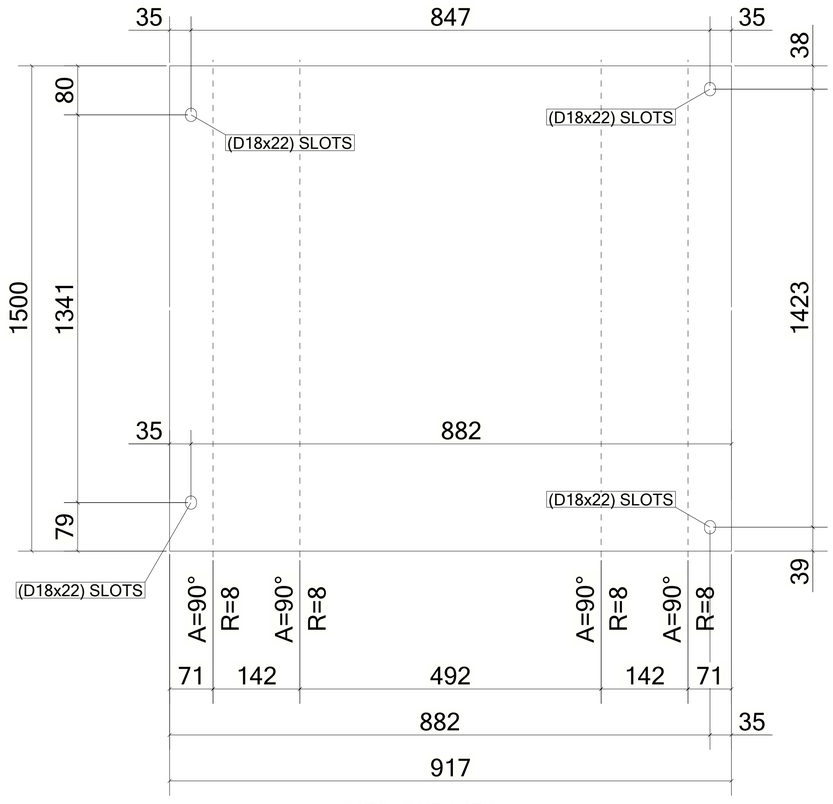

UNFOLDED VIEW

2 *REQUIRED AS DRAWN MARKED* **Z8-CHQ095**

6 October Monorail
Engineering Unit
Valid For Construction

GENERAL NOTES:

1. THE DIMENSIONS SHOWN ARE NOMINAL (IN MILLIMETERS), U.N.O.
2. WELD SIZESHALL BE AISC MINIMUM OF 6 mm UNLESS NOTED OTHERWISE.
3. ALL FIELD WELDS SHALL BE INSPECTED PER QUALITY ASSURANCE AND SPECIAL INSPECTIONS.

REFERENCE DRAWINGS

1	93M-BOA-NAT-LOT-04833
2	93M-BOA-NAT-LOT-09170
3	93M-BOA-NAT-LOT-01976
4	93M-BOA-NAT-LOT-20021
5	
6	
7	
8	
9	

6TH OF OCTOBER CITY RAIL TRANSIT MONORAIL

The Authority | Consultant: Hill International | Main Contractor: ORASCOM CONSTRUCTION, BOMBARDIER | Structural Designer: INNOVA TRANSPORTATION

KEY PLAN:

SCALE	SHOPDRAWING	DATE
AS SHOWN		12/05/2023

REV	DATE	DSG.	CHK.	APP.	AMENDMENTS	STATUS
B	12/05/2023	M.KH	M.KH	DR.M.M	ISSUED FOR INFORMATION	IFI
A	11/20/2022	M.KH	M.KH	DR.M.M	ISSUED FOR INFORMATION	IFI

DRAWING TITLE
6TH OF OCTOBER MONORAIL
SERVICE WALKWAYS
ZONE (1008)
Z8-CHQ095

Project Code	Rubric	Initiator	Lot	Ref	Number	Revision
93M	0476	ACC	60DEP	DWG	08173	B

Tekla structures

Same comments as
93M-0476-ACC-60DEP-DWG-08079-B.

REVIEWED WITH COMMENT
MONORAILS PROJECT

MATERIAL LIST FOR ASSEMBLY MK'D **Z8-CHQ094**

Mark	Profile	GRADE	No.	Length	Area	Weight
Z8-CHQ094	CHQD_PL5*917.1	S235JR	1	1549	2.86	55.62
				Total	2.86	55.62

BOLT LIST:-

BOLT \ STUD	BOLT DESCRIPTION		QTY	FINISH
BOLT	B1N2W16 X 40	A325M	2	
BOLT	B1N2W16 X 50	A325M	4	

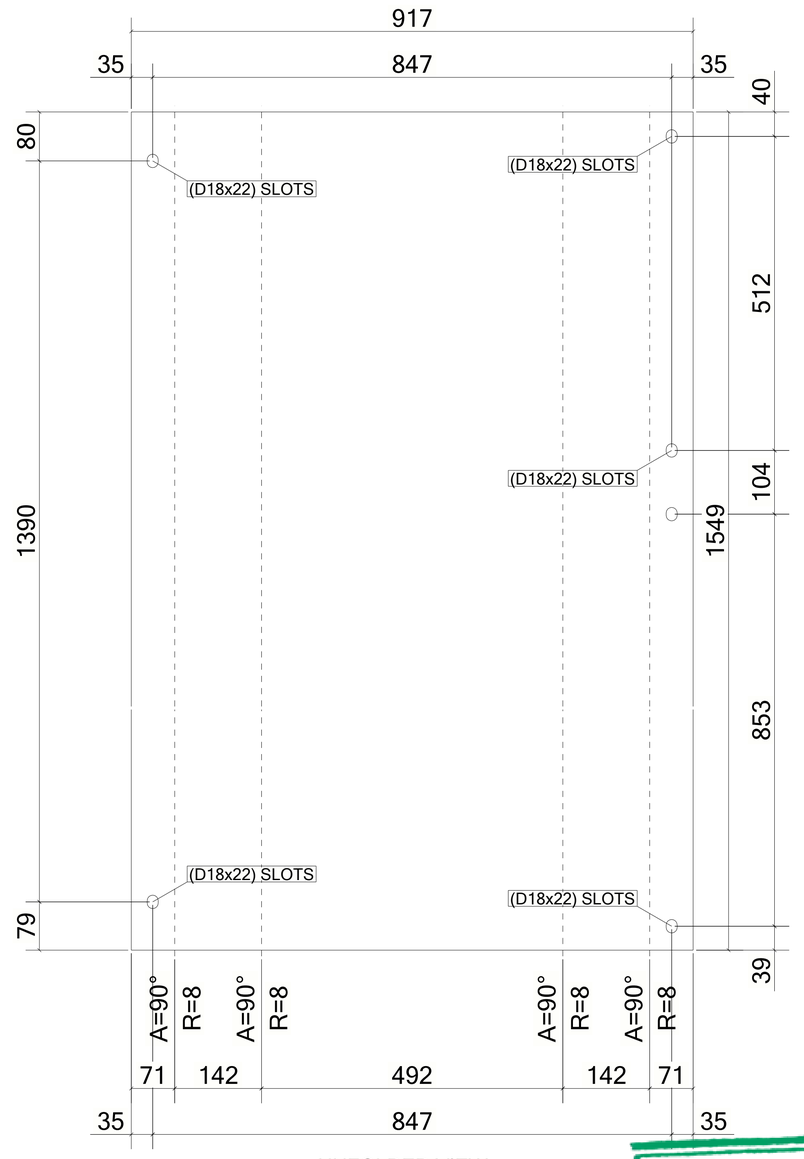

UNFOLDED VIEW

1 *REQUIRED AS DRAWN MARKED* **Z8-CHQ094**

6 October Monorail
Engineering Unit
Valid For Construction

GENERAL NOTES:

1. THE DIMENSIONS SHOWN ARE NOMINAL (IN MILLIMETERS), U.N.O.
2. WELD SIZESHALL BE AISC MINIMUM OF 6 mm UNLESS NOTED OTHERWISE.
3. ALL FIELD WELDS SHALL BE INSPECTED PER QUALITY ASSURANCE AND SPECIAL INSPECTIONS.

REFERENCE DRAWINGS

1	93M-BOA-NAT-LOT-04833
2	93M-BOA-NAT-LOT-09170
3	93M-BOA-NAT-LOT-01976
4	93M-BOA-NAT-LOT-20021
5	
6	
7	
8	
9	

6TH OF OCTOBER CITY RAIL TRANSIT MONORAIL

The Authority | Consultant: Hill International | Main Contractor: ORASCOM CONSTRUCTION, BOMBARDIER | Structural Designer: INNOVA TRANSPORTATION

KEY PLAN:

SCALE	SHOPDRAWING	DATE
AS SHOWN		12/05/2023

REV	DATE	DSG.	CHK.	APP.	AMENDMENTS	STATUS
B	12/05/2023	M.KH	M.KH	DR.M.M	ISSUED FOR INFORMATION	IFI
A	11/20/2022	M.KH	M.KH	DR.M.M	ISSUED FOR INFORMATION	IFI

DRAWING TITLE
6TH OF OCTOBER MONORAIL
SERVICE WALKWAYS
ZONE (1008)
Z8-CHQ094

Project Code	Rubric	Initiator	Lot	Ref	Number	Revision
93	M047	6ACC	60DEP	DWG	08172	B

Tekla structures

Same comments as
93M-0476-ACC-60DEP-DWG-08079-B.

REVIEWED WITH COMMENT MONORAILS PROJECT

MATERIAL LIST FOR ASSEMBLY MK'D **Z8-CHQ093**

Mark	Profile	GRADE	No.	Length	Area	Weight
Z8-CHQ093	CHQD_PL5*917.1	S235JR	1	1100	2.04	39.51
				Total	2.04	39.51

BOLT LIST:-

BOLT \ STUD	BOLT DESCRIPTION		QTY	FINISH
BOLT	B1N2W 16 X 40	A325M	2	
BOLT	B1N2W 16 X 50	A325M	2	

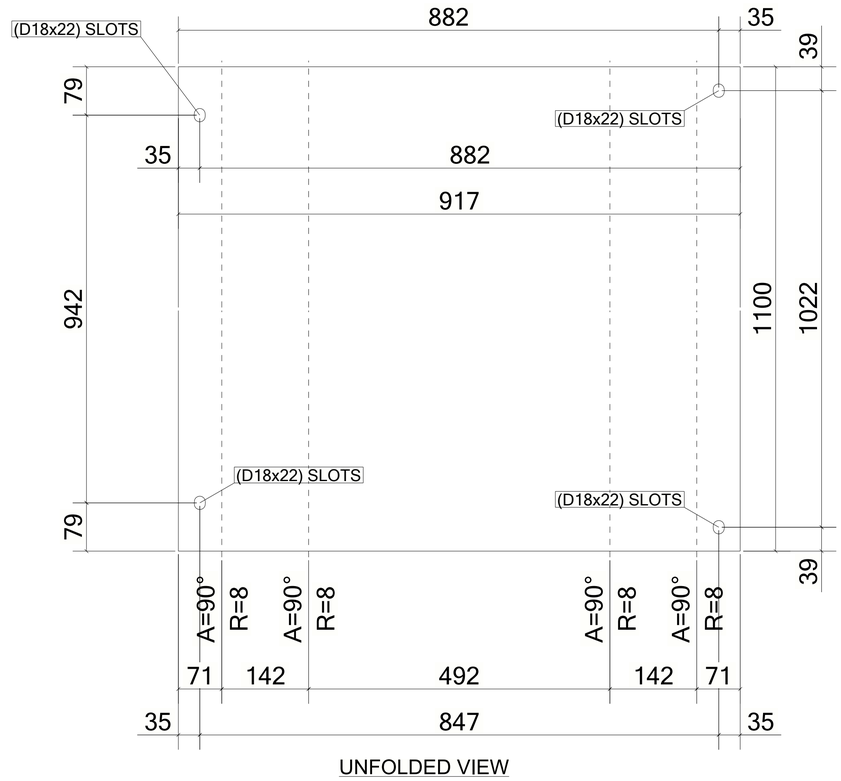

UNFOLDED VIEW

6 October Monorail Engineering Unit
Valid For Construction

1 *REQUIRED AS DRAWN MARKED* **Z8-CHQ093**

GENERAL NOTES:

1. THE DIMENSIONS SHOWN ARE NOMINAL (IN MILLIMETERS), U.N.O.
2. WELD SIZESHALL BE AISC MINIMUM OF 6 mm UNLESS NOTED OTHERWISE.
3. ALL FIELD WELDS SHALL BE INSPECTED PER QUALITY ASSURANCE AND SPECIAL INSPECTIONS.

REFERENCE DRAWINGS

1	93M-BOA-NAT-LOT-04833
2	93M-BOA-NAT-LOT-09170
3	93M-BOA-NAT-LOT-01976
4	93M-BOA-NAT-LOT-20021
5	
6	
7	
8	
9	

6TH OF OCTOBER CITY RAIL TRANSIT MONORAIL

The Authority | Hill International Consultant | ORASCOM BOMBARDIER Main Contractor | INNOVA Structural Designer

KEY PLAN:

SCALE	SHOPDRAWING	DATE
AS SHOWN		12/05/2023

REV	DATE	DSG.	CHK.	APP.	AMENDMENTS	STATUS
B	12/05/2023	M.KH	M.KH	DR.M.M	ISSUED FOR INFORMATION	IFI
A	11/20/2022	M.KH	M.KH	DR.M.M	ISSUED FOR INFORMATION	IFI

DRAWING TITLE
6TH OF OCTOBER MONORAIL
SERVICE WALKWAYS
ZONE (1008)
Z8-CHQ093

Project Code	Rubric	Initiator	Lot	Ref	Number	Revision
93M	0476	ACC	60DEP	DWG	08171	B

Tekla structures

Same comments as
93M-0476-ACC-60DEP-DWG-08079-B.

REVIEWED WITH COMMENT MONORAILS PROJECT

MATERIAL LIST FOR ASSEMBLY MK'D **Z8-CHQ092**

Mark	Profile	GRADE	No.	Length	Area	Weight
Z8-CHQ092	CHQD_PL5*917.1	S235JR	1	1100	2.04	39.51
				Total	2.04	39.51

BOLT LIST:-

BOLT \ STUD	BOLT DESCRIPTION		QTY	FINISH
BOLT	B1N2W 16 X 40	A325M	2	
BOLT	B1N2W 16 X 50	A325M	2	

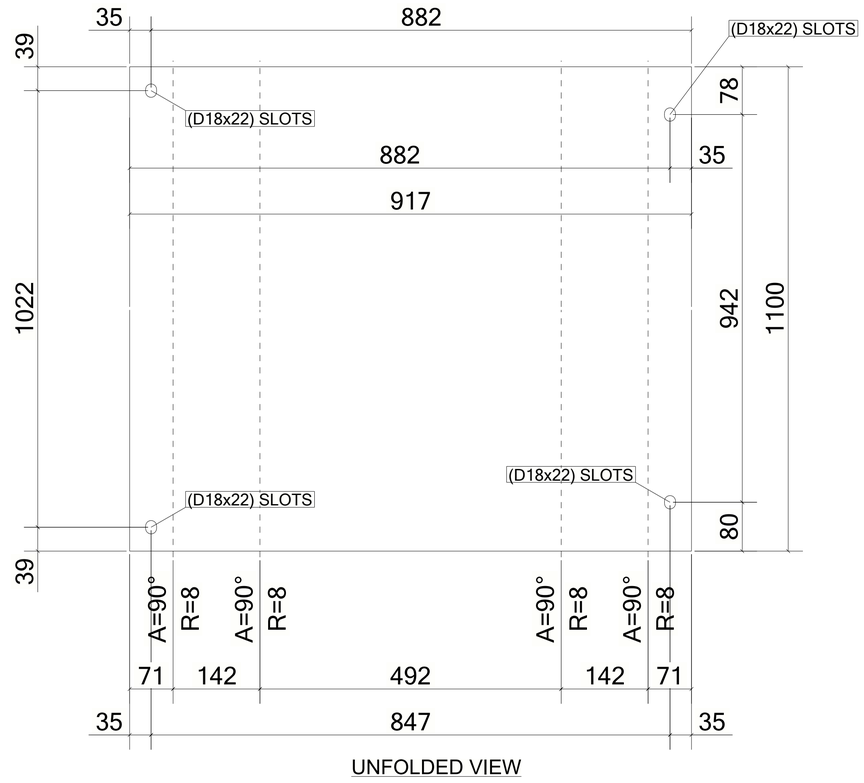

UNFOLDED VIEW

6 October Monorail Engineering Unit
Valid For Construction

1 *REQUIRED AS DRAWN MARKED* **Z8-CHQ092**

GENERAL NOTES:

1. THE DIMENSIONS SHOWN ARE NOMINAL (IN MILLIMETERS), U.N.O.
2. WELD SIZESHALL BE AISC MINIMUM OF 6 mm UNLESS NOTED OTHERWISE.
3. ALL FIELD WELDS SHALL BE INSPECTED PER QUALITY ASSURANCE AND SPECIAL INSPECTIONS.

REFERENCE DRAWINGS

1	93M-BOA-NAT-LOT-04833
2	93M-BOA-NAT-LOT-09170
3	93M-BOA-NAT-LOT-01976
4	93M-BOA-NAT-LOT-20021
5	
6	
7	
8	
9	

6TH OF OCTOBER CITY RAIL TRANSIT MONORAIL

The Authority | Hill International Consultant | ORASCOM BOMBARDIER Main Contractor | INNOVA Structural Designer

KEY PLAN:

SCALE	SHOPDRAWING	DATE
AS SHOWN		12/05/2023

REV	DATE	DSG.	CHK.	APP.	AMENDMENTS	STATUS
B	12/05/2023	M.KH	M.KH	DR.M.M	ISSUED FOR INFORMATION	IFI
A	11/20/2022	M.KH	M.KH	DR.M.M	ISSUED FOR INFORMATION	IFI

DRAWING TITLE
6TH OF OCTOBER MONORAIL
SERVICE WALKWAYS
ZONE (1008)
Z8-CHQ092

Project Code	Rubric	Initiator	Lot	Ref	Number	Revision
93M	0476	ACC	60DEP	DWG	08170	B

Tekla structures

Same comments as
93M-0476-ACC-60DEP-DWG-08079-B.

REVIEWED WITH COMMENT
MONORAILS PROJECT

MATERIAL LIST FOR ASSEMBLY MK'D **Z8-CHQ091**

Mark	Profile	GRADE	No.	Length	Area	Weight
Z8-CHQ091	CHQD_PL5*917.1	S235JR	1	1549	2.86	55.62
				Total	2.86	55.62

BOLT LIST:-

BOLT \ STUD	BOLT DESCRIPTION		QTY	FINISH
BOLT	B1N2W16 X 40	A325M	1	
BOLT	B1N2W16 X 50	A325M	4	

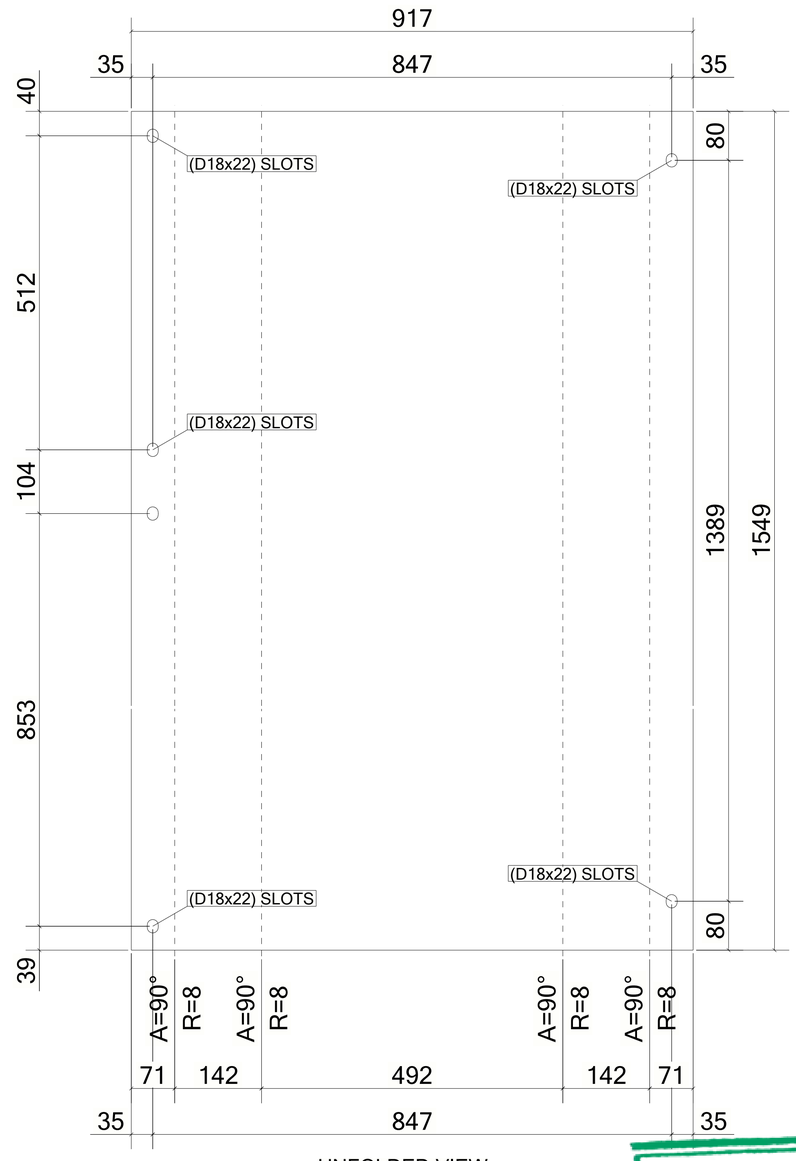

UNFOLDED VIEW

1 *REQUIRED AS DRAWN MARKED* **Z8-CHQ091**

6 October Monorail
Engineering Unit
Valid For Construction

GENERAL NOTES:

1. THE DIMENSIONS SHOWN ARE NOMINAL (IN MILLIMETERS), U.N.O.
2. WELD SIZESHALL BE AISC MINIMUM OF 6 mm UNLESS NOTED OTHERWISE.
3. ALL FIELD WELDS SHALL BE INSPECTED PER QUALITY ASSURANCE AND SPECIAL INSPECTIONS.

REFERENCE DRAWINGS

1	93M-BOA-NAT-LOT-04833
2	93M-BOA-NAT-LOT-09170
3	93M-BOA-NAT-LOT-01976
4	93M-BOA-NAT-LOT-20021
5	
6	
7	
8	
9	

6TH OF OCTOBER CITY RAIL TRANSIT MONORAIL

The Authority | Consultant | Main Contractor | Structural Designer

KEY PLAN:

SCALE	SHOPDRAWING	DATE
AS SHOWN		12/05/2023

REV	DATE	DSG.	CHK.	APP.	AMENDMENTS	STATUS
B	12/05/2023	M.KH	M.KH	DR.M.M	ISSUED FOR INFORMATION	IFI
A	11/20/2022	M.KH	M.KH	DR.M.M	ISSUED FOR INFORMATION	IFI

DRAWING TITLE
6TH OF OCTOBER MONORAIL
SERVICE WALKWAYS
ZONE (1008)
Z8-CHQ091

Project Code	Rubric	Initiator	Lot	Ref	Number	Revision
93M	0476	ACC	60DEP	DWG	08169	B

Tekla structures

Same comments as
93M-0476-ACC-60DEP-DWG-08079-B.

REVIEWED WITH COMMENT MONORAILS PROJECT

MATERIAL LIST FOR ASSEMBLY MK'D **Z8-CHQ090**

Mark	Profile	GRADE	No.	Length	Area	Weight
Z8-CHQ090	CHQD_PL5*817.1	S235JR	1	1120	1.85	35.83
				Total	1.85	35.83

BOLT LIST:-

BOLT \ STUD	BOLT DESCRIPTION		QTY	FINISH
BOLT	B1N2W 16 X 40	A325M	4	

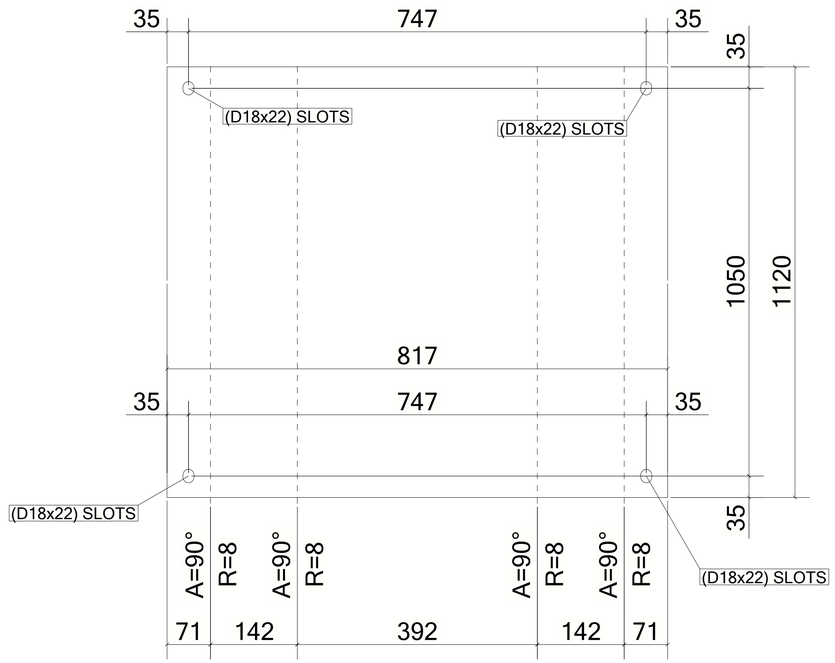

UNFOLDED VIEW

1 *REQUIRED AS DRAWN MARKED* **Z8-CHQ090**

6 October Monorail Engineering Unit
Valid For Construction

GENERAL NOTES:

1. THE DIMENSIONS SHOWN ARE NOMINAL (IN MILLIMETERS), U.N.O.
2. WELD SIZESHALL BE AISC MINIMUM OF 6 mm UNLESS NOTED OTHERWISE.
3. ALL FIELD WELDS SHALL BE INSPECTED PER QUALITY ASSURANCE AND SPECIAL INSPECTIONS.

REFERENCE DRAWINGS

1	93M-BOA-NAT-LOT-04833
2	93M-BOA-NAT-LOT-09170
3	93M-BOA-NAT-LOT-01976
4	93M-BOA-NAT-LOT-20021
5	
6	
7	
8	
9	

6TH OF OCTOBER CITY RAIL TRANSIT MONORAIL

The Authority | Hill International Consultant | ORASCOM BOMBARDIER Main Contractor | INNOVA TRANSPORTATION Structural Designer

KEY PLAN:

SCALE	SHOPDRAWING	DATE
AS SHOWN		12/05/2023

REV	DATE	DSG.	CHK.	APP.	AMENDMENTS	STATUS
B	12/05/2023	M.KH	M.KH	DR.M.M	ISSUED FOR INFORMATION	IFI
A	11/20/2022	M.KH	M.KH	DR.M.M	ISSUED FOR INFORMATION	IFI

DRAWING TITLE
6TH OF OCTOBER MONORAIL
SERVICE WALKWAYS
ZONE (1008)
Z8-CHQ090

Project Code	Rubric	Initiator	Lot	Ref	Number	Revision
93M	0476	ACC	60DEP	DWG	08168	B

Tekla structures

Same comments as
93M-0476-ACC-60DEP-DWG-08079-B.

REVIEWED WITH
COMMENT
MONORAILS PROJECT

MATERIAL LIST FOR ASSEMBLY MK'D **Z8-CHQ089**

Mark	Profile	GRADE	No.	Length	Area	Weight
Z8-CHQ089	CHQD_PL5*817.1	S235JR	1	1120	1.85	35.83
				Total	1.85	35.83

BOLT LIST:-

BOLT \ STUD	BOLT DESCRIPTION	QTY	FINISH
BOLT	B1N2W16 X 40 A325M	4	

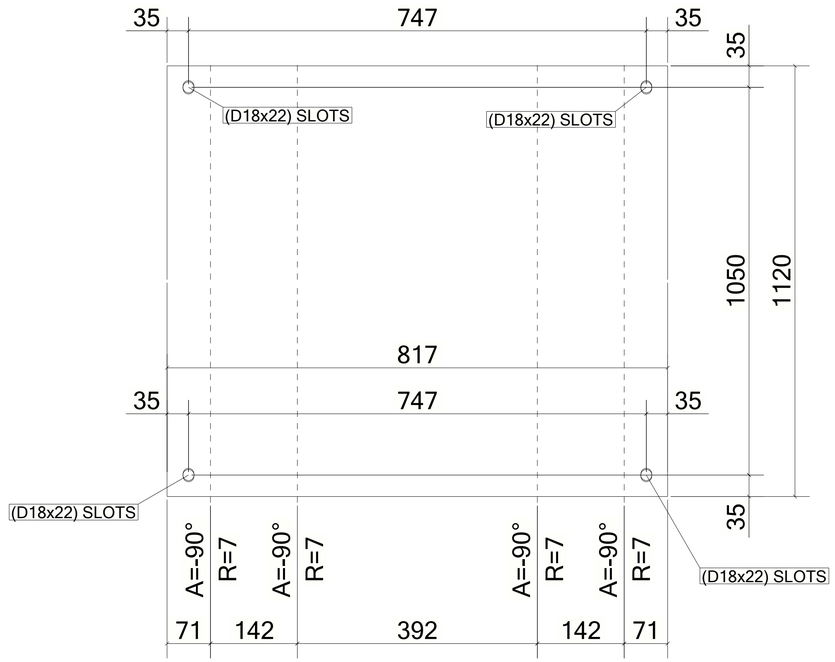

UNFOLDED VIEW

1 *REQUIRED AS DRAWN MARKED* **Z8-CHQ089**

6 October Monorail
Engineering Unit
Valid For Construction

GENERAL NOTES:

1. THE DIMENSIONS SHOWN ARE NOMINAL (IN MILLIMETERS), U.N.O.
2. WELD SIZESHALL BE AISC MINIMUM OF 6 mm UNLESS NOTED OTHERWISE.
3. ALL FIELD WELDS SHALL BE INSPECTED PER QUALITY ASSURANCE AND SPECIAL INSPECTIONS.

REFERENCE DRAWINGS

1	93M-BOA-NAT-LOT-04833
2	93M-BOA-NAT-LOT-09170
3	93M-BOA-NAT-LOT-01976
4	93M-BOA-NAT-LOT-20021
5	
6	
7	
8	
9	

6TH OF OCTOBER CITY RAIL TRANSIT MONORAIL

The Authority | Consultant: Hill International | Main Contractor: ORASCOM CONSTRUCTION / BOMBARDIER | Structural Designer: INNOVA TRANSPORTATION

KEY PLAN:

SCALE: AS SHOWN | SHOPDRAWING | DATE: 12/05/2023

REV	DATE	DSG.	CHK.	APP.	AMENDMENTS	STATUS
B	12/05/2023	M.KH	M.KH	DR.M.M	ISSUED FOR INFORMATION	IFI
A	11/20/2022	M.KH	M.KH	DR.M.M	ISSUED FOR INFORMATION	IFI

DRAWING TITLE
6TH OF OCTOBER MONORAIL
SERVICE WALKWAYS
ZONE (1008)
Z8-CHQ089

Project Code	Rubric	Initiator	Lot	Ref	Number	Revision
93	M047	6ACC	60DE	PDWG	08167	B

Tekla structures

Same comments as 93M-0476-ACC-60DEP-DWG-08079-B.

REVIEWED WITH COMMENT
MONORAILS PROJECT

MATERIAL LIST FOR ASSEMBLY MK'D **Z8-CHQ088**

Mark	Profile	GRADE	No.	Length	Area	Weight
Z8-CHQ088	CHQD_PL5*917.1	S235JR	1	1544	2.82	54.71
				Total	2.82	54.71

BOLT LIST:-

BOLT \ STUD	BOLT DESCRIPTION		QTY	FINISH
BOLT	B1N2W16 X 40	A325M	4	
BOLT	B1N2W16 X 50	A325M	2	

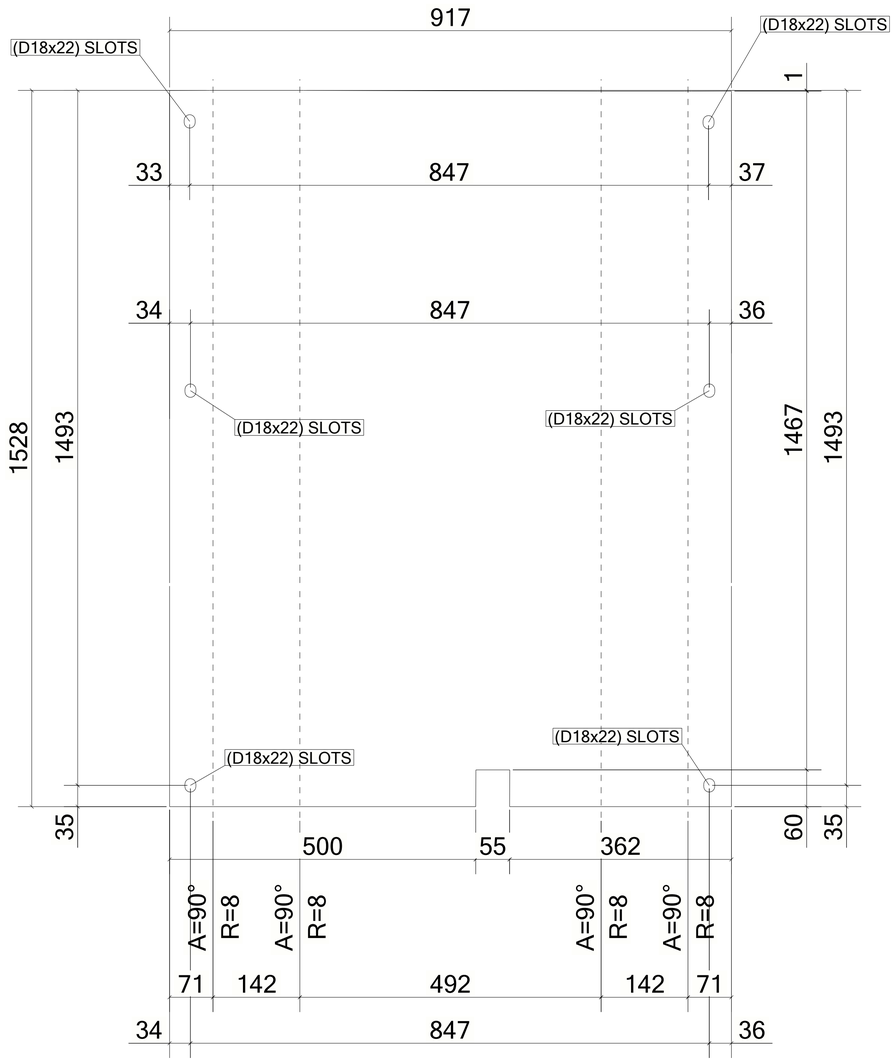

UNFOLDED VIEW

1 *REQUIRED AS DRAWN MARKED* **Z8-CHQ088**

6 October Monorail
Engineering Unit
Valid For Construction

GENERAL NOTES:

1. THE DIMENSIONS SHOWN ARE NOMINAL (IN MILLIMETERS), U.N.O.
2. WELD SIZESHALL BE AISC MINIMUM OF 6 mm UNLESS NOTED OTHERWISE.
3. ALL FIELD WELDS SHALL BE INSPECTED PER QUALITY ASSURANCE AND SPECIAL INSPECTIONS.

REFERENCE DRAWINGS

1	93M-BOA-NAT-LOT-04833
2	93M-BOA-NAT-LOT-09170
3	93M-BOA-NAT-LOT-01976
4	93M-BOA-NAT-LOT-20021
5	
6	
7	
8	
9	

6TH OF OCTOBER CITY RAIL TRANSIT MONORAIL

The Authority | Hill International Consultant | Main Contractor | Structural Designer

KEY PLAN:

SCALE	SHOPDRAWING	DATE
AS SHOWN		12/05/2023

REV	DATE	DSG.	CHK.	APP.	AMENDMENTS	STATUS
B	12/05/2023	M.KH	M.KH	DR.M.M	ISSUED FOR INFORMATION	IFI
A	11/20/2022	M.KH	M.KH	DR.M.M	ISSUED FOR INFORMATION	IFI

DRAWING TITLE
6TH OF OCTOBER MONORAIL
SERVICE WALKWAYS
ZONE (1008)
Z8-CHQ088

Project Code	Rubric	Initiator	Lot	Ref	Number	Revision
93M	047	6ACC	60DEP	DWG	08166	B

Tekla structures

Same comments as
93M-0476-ACC-60DEP-DWG-08079-B.

REVIEWED WITH
COMMENT
MONORAILS PROJECT

MATERIAL LIST FOR ASSEMBLY MK'D **Z8-CHQ087**

Mark	Profile	GRADE	No.	Length	Area	Weight
Z8-CHQ087	CHQD_PL5*917.1	S235JR	1	1544	2.82	54.79
				Total	2.82	54.79

BOLT LIST:-

BOLT \ STUD	BOLT DESCRIPTION		QTY	FINISH
BOLT	B1N2W16 X 40	A325M	4	
BOLT	B1N2W16 X 50	A325M	2	

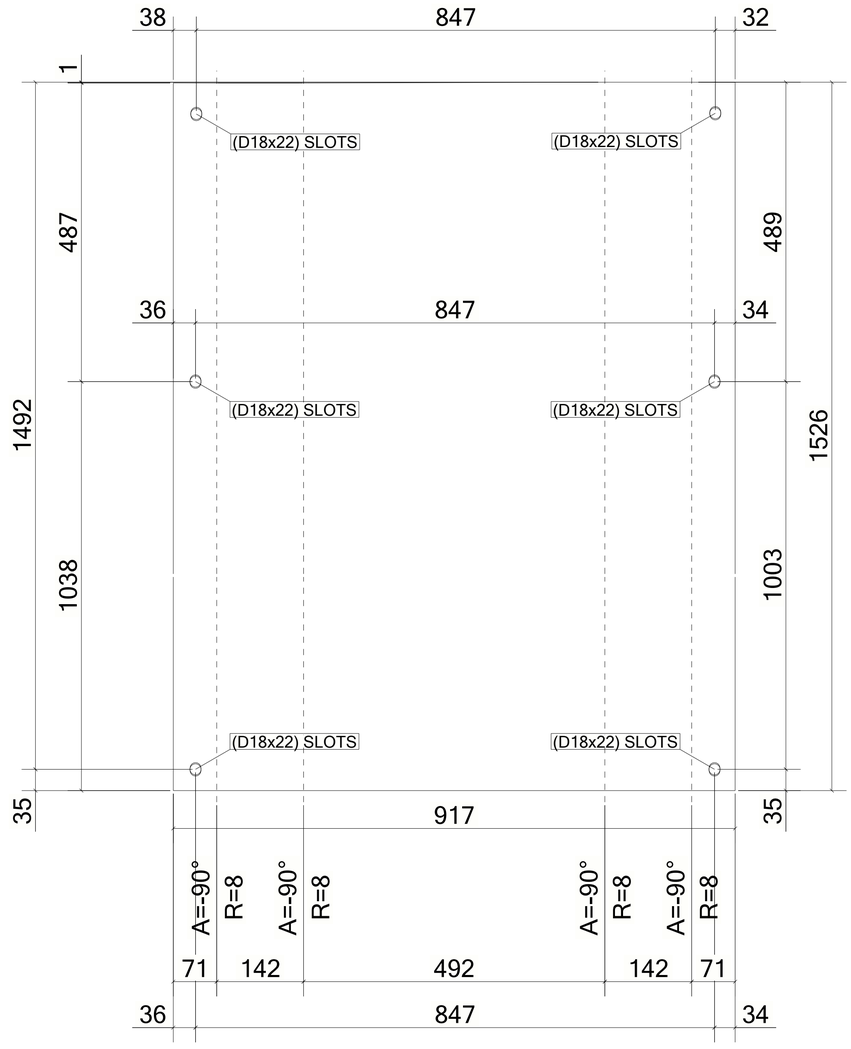

UNFOLDED VIEW

1 *REQUIRED AS DRAWN MARKED* **Z8-CHQ087**

6 October Monorail
Engineering Unit
Valid For Construction

GENERAL NOTES:

1. THE DIMENSIONS SHOWN ARE NOMINAL (IN MILLIMETERS), U.N.O.
2. WELD SIZESHALL BE AISC MINIMUM OF 6 mm UNLESS NOTED OTHERWISE.
3. ALL FIELD WELDS SHALL BE INSPECTED PER QUALITY ASSURANCE AND SPECIAL INSPECTIONS.

REFERENCE DRAWINGS

1	93M-BOA-NAT-LOT-04833
2	93M-BOA-NAT-LOT-09170
3	93M-BOA-NAT-LOT-01976
4	93M-BOA-NAT-LOT-20021
5	
6	
7	
8	
9	

6TH OF OCTOBER CITY RAIL TRANSIT MONORAIL

The Authority | Consultant | Main Contractor | Structural Designer

KEY PLAN:

SCALE: AS SHOWN | SHOPDRAWING | DATE: 12/05/2023

REV	DATE	DSG.	CHK.	APP.	AMENDMENTS	STATUS
B	12/05/2023	M.KH	M.KH	DR.M.M	ISSUED FOR INFORMATION	IFI
A	11/20/2022	M.KH	M.KH	DR.M.M	ISSUED FOR INFORMATION	IFI

DRAWING TITLE
6TH OF OCTOBER MONORAIL
SERVICE WALKWAYS
ZONE (1008)
Z8-CHQ087

Project Code	Rubric	Initiator	Lot	Ref	Number	Revision
93M0476	ACC	60DEP	DWG	08165		B

Tekla structures

Same comments as
93M-0476-ACC-60DEP-DWG-08079-B.

REVIEWED WITH
COMMENT
MONORAILS PROJECT

MATERIAL LIST FOR ASSEMBLY MK'D **Z8-CHQ086**

Mark	Profile	GRADE	No.	Length	Area	Weight
Z8-CHQ086	CHQD_PL5*917.1	S235JR	1	1445	2.66	51.64
				Total	2.66	51.64

BOLT LIST:-

BOLT \ STUD	BOLT DESCRIPTION		QTY	FINISH
BOLT	B1N2W16 X 40	A325M	4	
BOLT	B1N2W16 X 50	A325M	2	

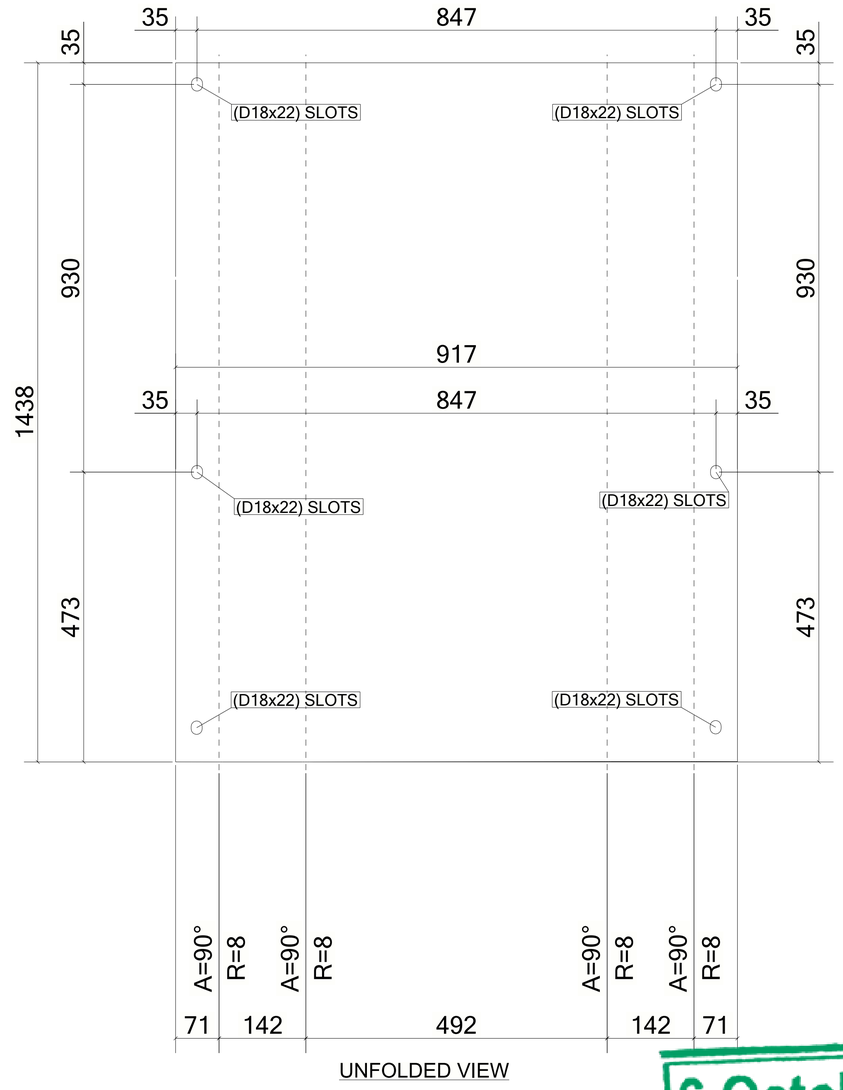

UNFOLDED VIEW

2 *REQUIRED AS DRAWN MARKED* **Z8-CHQ086**

6 October Monorail
Engineering Unit
Valid For Construction

GENERAL NOTES:

1. THE DIMENSIONS SHOWN ARE NOMINAL (IN MILLIMETERS), U.N.O.
2. WELD SIZESHALL BE AISC MINIMUM OF 6 mm UNLESS NOTED OTHERWISE.
3. ALL FIELD WELDS SHALL BE INSPECTED PER QUALITY ASSURANCE AND SPECIAL INSPECTIONS.

REFERENCE DRAWINGS

1	93M-BOA-NAT-LOT-04833
2	93M-BOA-NAT-LOT-09170
3	93M-BOA-NAT-LOT-01976
4	93M-BOA-NAT-LOT-20021
5	
6	
7	
8	
9	

6TH OF OCTOBER CITY RAIL TRANSIT MONORAIL

The Authority | Consultant | Main Contractor | Structural Designer

KEY PLAN:

SCALE	SHOPDRAWING	DATE
AS SHOWN		12/05/2023

REV	DATE	DSG.	CHK.	APP.	AMENDMENTS	STATUS
B	12/05/2023	M.KH	M.KH	DR.M.M	ISSUED FOR INFORMATION	IFI
A	11/20/2022	M.KH	M.KH	DR.M.M	ISSUED FOR INFORMATION	IFI

DRAWING TITLE
6TH OF OCTOBER MONORAIL
SERVICE WALKWAYS
ZONE (1008)
Z8-CHQ086

Project Code	Rubric	Initiator	Lot	Ref	Number	Revision
93	M047	6ACC	60DE	P	DWG0816	4 B

Tekla structures

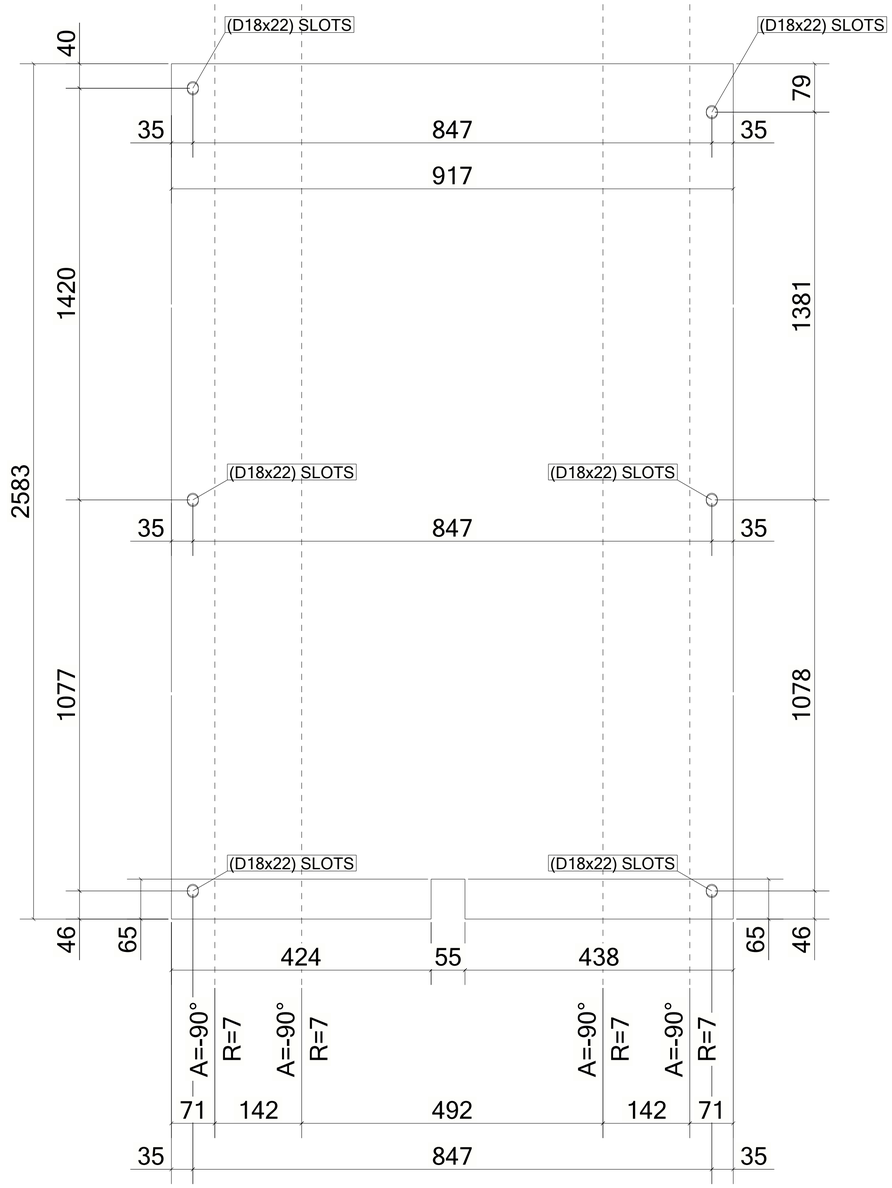

UNFOLDED VIEW

MATERIAL LIST FOR ASSEMBLY MK'D **Z8-CHQ085**

Mark	Profile	GRADE	No.	Length	Area	Weight
Z8-CHQ085	CHQD_PL5*917.1	S235JR	1	2778	4.76	92.63
				Total	4.76	92.63

BOLT LIST:-

BOLT \ STUD	BOLT DESCRIPTION		QTY	FINISH
BOLT	B1N2W16 X 40	A325M	5	
BOLT	B1N2W16 X 50	A325M	1	

Same comments as 93M-0476-ACC-60DEP-DWG-08079-B.

REVIEWED WITH COMMENT
MONORAILS PROJECT

1 *REQUIRED AS DRAWN MARKED* **Z8-CHQ085**

GENERAL NOTES:

1. THE DIMENSIONS SHOWN ARE NOMINAL (IN MILLIMETERS), U.N.O.
2. WELD SIZESHALL BE AISC MINIMUM OF 6 mm UNLESS NOTED OTHERWISE.
3. ALL FIELD WELDS SHALL BE INSPECTED PER QUALITY ASSURANCE AND SPECIAL INSPECTIONS.

REFERENCE DRAWINGS

1	93M-BOA-NAT-LOT-04833
2	93M-BOA-NAT-LOT-09170
3	93M-BOA-NAT-LOT-01976
4	93M-BOA-NAT-LOT-20021
5	
6	
7	
8	
9	

6TH OF OCTOBER CITY RAIL TRANSIT MONORAIL

The Authority | Consultant: Hill International | Main Contractor: ORASCOM CONSTRUCTION, BOMBARDIER | Structural Designer: INNOVA TRANSPORTATION

KEY PLAN:

6 October Monorail Engineering Unit
Valid For Construction

SCALE	SHOPDRAWING	DATE
AS SHOWN		12/05/2023

REV	DATE	DSG.	CHK.	APP.	AMENDMENTS	STATUS
B	12/05/2023	M.KH	M.KH	DR.M.M	ISSUED FOR INFORMATION	IFI
A	11/20/2022	M.KH	M.KH	DR.M.M	ISSUED FOR INFORMATION	IFI

DRAWING TITLE
6TH OF OCTOBER MONORAIL
SERVICE WALKWAYS
ZONE (1008)
Z8-CHQ085

Project Code	Rubric	Initiator	Lot	Ref	Number	Revision
93M	0476	ACC	60DEP	DWG	08163	B

Tekla structures

Same comments as
93M-0476-ACC-60DEP-DWG-08079-B.

REVIEWED WITH COMMENT
MONORAILS PROJECT

MATERIAL LIST FOR ASSEMBLY MK'D **Z8-CHQ084**

Mark	Profile	GRADE	No.	Length	Area	Weight
Z8-CHQ084	CHQD_PL5*917.1	S235JR	1	2778	4.77	92.78
				Total	4.77	92.78

BOLT LIST:-

BOLT \ STUD	BOLT DESCRIPTION		QTY	FINISH
BOLT	B1N2W16 X 40	A325M	3	
BOLT	B1N2W16 X 50	A325M	1	

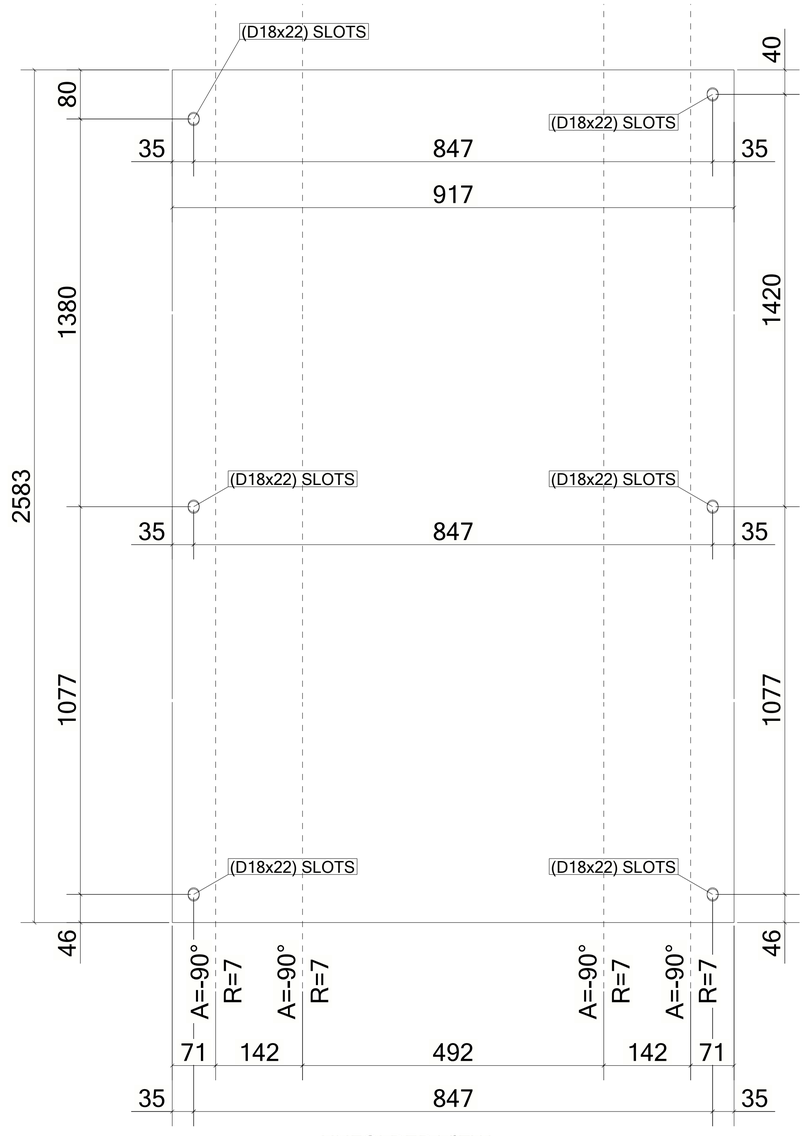

UNFOLDED VIEW

1 *REQUIRED AS DRAWN MARKED* **Z8-CHQ084**

6 October Monorail
Engineering Unit
Valid For Construction

GENERAL NOTES:

1. THE DIMENSIONS SHOWN ARE NOMINAL (IN MILLIMETERS), U.N.O.
2. WELD SIZESHALL BE AISC MINIMUM OF 6 mm UNLESS NOTED OTHERWISE.
3. ALL FIELD WELDS SHALL BE INSPECTED PER QUALITY ASSURANCE AND SPECIAL INSPECTIONS.

REFERENCE DRAWINGS

1	93M-BOA-NAT-LOT-04833
2	93M-BOA-NAT-LOT-09170
3	93M-BOA-NAT-LOT-01976
4	93M-BOA-NAT-LOT-20021
5	
6	
7	
8	
9	

6TH OF OCTOBER CITY RAIL TRANSIT MONORAIL

The Authority | Consultant | Main Contractor | Structural Designer

KEY PLAN:

SCALE	SHOPDRAWING	DATE
AS SHOWN		12/05/2023

REV	DATE	DSG.	CHK.	APP.	AMENDMENTS	STATUS
B	12/05/2023	M.KH	M.KH	DR.M.M	ISSUED FOR INFORMATION	IFI
A	11/20/2022	M.KH	M.KH	DR.M.M	ISSUED FOR INFORMATION	IFI

DRAWING TITLE
6TH OF OCTOBER MONORAIL
SERVICE WALKWAYS
ZONE (1008)
Z8-CHQ084

Project Code	Rubric	Initiator	Lot	Ref	Number	Revision
93M	0476	ACC	60DEP	DWG	08162	B

Tekla structures

Same comments as 93M-0476-ACC-60DEP-DWG-08079-B.

REVIEWED WITH COMMENT
MONORAILS PROJECT

MATERIAL LIST FOR ASSEMBLY MK'D **Z8-CHQ083**

Mark	Profile	GRADE	No.	Length	Area	Weight
Z8-CHQ083	CHQD_PL5*917.1	S235JR	1	1698	3.14	60.98
				Total	3.14	60.98

BOLT LIST:-

BOLT \ STUD	BOLT DESCRIPTION		QTY	FINISH
BOLT	B1N2W16 X 40	A325M	2	
BOLT	B1N2W16 X 50	A325M	1	

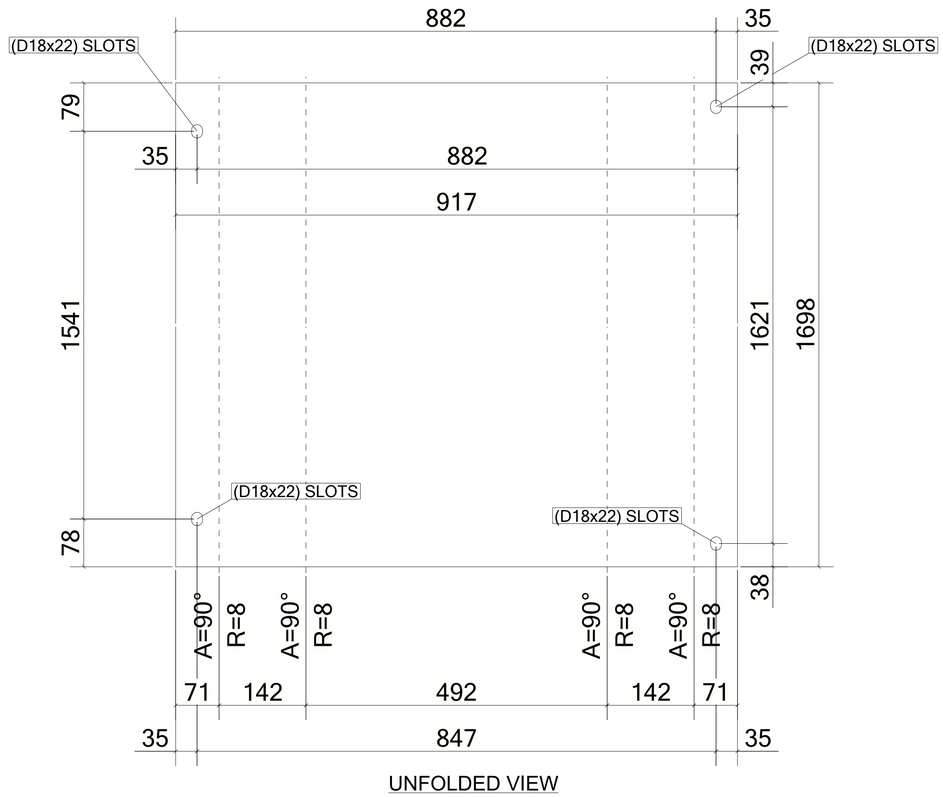

UNFOLDED VIEW

1 *REQUIRED AS DRAWN MARKED* **Z8-CHQ083**

6 October Monorail
Engineering Unit
Valid For Construction

GENERAL NOTES:

1. THE DIMENSIONS SHOWN ARE NOMINAL (IN MILLIMETERS), U.N.O.
2. WELD SIZESHALL BE AISC MINIMUM OF 6 mm UNLESS NOTED OTHERWISE.
3. ALL FIELD WELDS SHALL BE INSPECTED PER QUALITY ASSURANCE AND SPECIAL INSPECTIONS.

REFERENCE DRAWINGS

1	93M-BOA-NAT-LOT-04833
2	93M-BOA-NAT-LOT-09170
3	93M-BOA-NAT-LOT-01976
4	93M-BOA-NAT-LOT-20021
5	
6	
7	
8	
9	

6TH OF OCTOBER CITY RAIL TRANSIT MONORAIL

The Authority | Consultant: Hill International | Main Contractor: ORASCOM CONSTRUCTION, BOMBARDIER | Structural Designer: INNOVA TRANSPORTATION

KEY PLAN:

SCALE	SHOPDRAWING	DATE
AS SHOWN		12/05/2023

REV	DATE	DSG.	CHK.	APP.	AMENDMENTS	STATUS
B	12/05/2023	MKH	MKH	DRMM	ISSUED FOR INFORMATION	IFI
A	11/20/2022	MKH	MKH	DRMM	ISSUED FOR INFORMATION	IFI

DRAWING TITLE
6TH OF OCTOBER MONORAIL
SERVICE WALKWAYS
ZONE (1008)
Z8-CHQ083

Project Code	Rubric	Initiator	Lot	Ref	Number	Revision
93M	0476	ACC	60DEP	DWG	08161	B

Tekla structures

Same comments as 93M-0476-ACC-60DEP-DWG-08079-B.

REVIEWED WITH COMMENT
MONORAILS PROJECT

MATERIAL LIST FOR ASSEMBLY MK'D **Z8-CHQ082**

Mark	Profile	GRADE	No.	Length	Area	Weight
Z8-CHQ082	CHQD_PL5*917.1	S235JR	1	1450	2.67	51.84
				Total	2.67	51.84

BOLT LIST:-

BOLT \ STUD	BOLT DESCRIPTION	QTY	FINISH
BOLT	B1N2W16 X 40 A325M	4	
BOLT	B1N2W16 X 50 A325M	2	

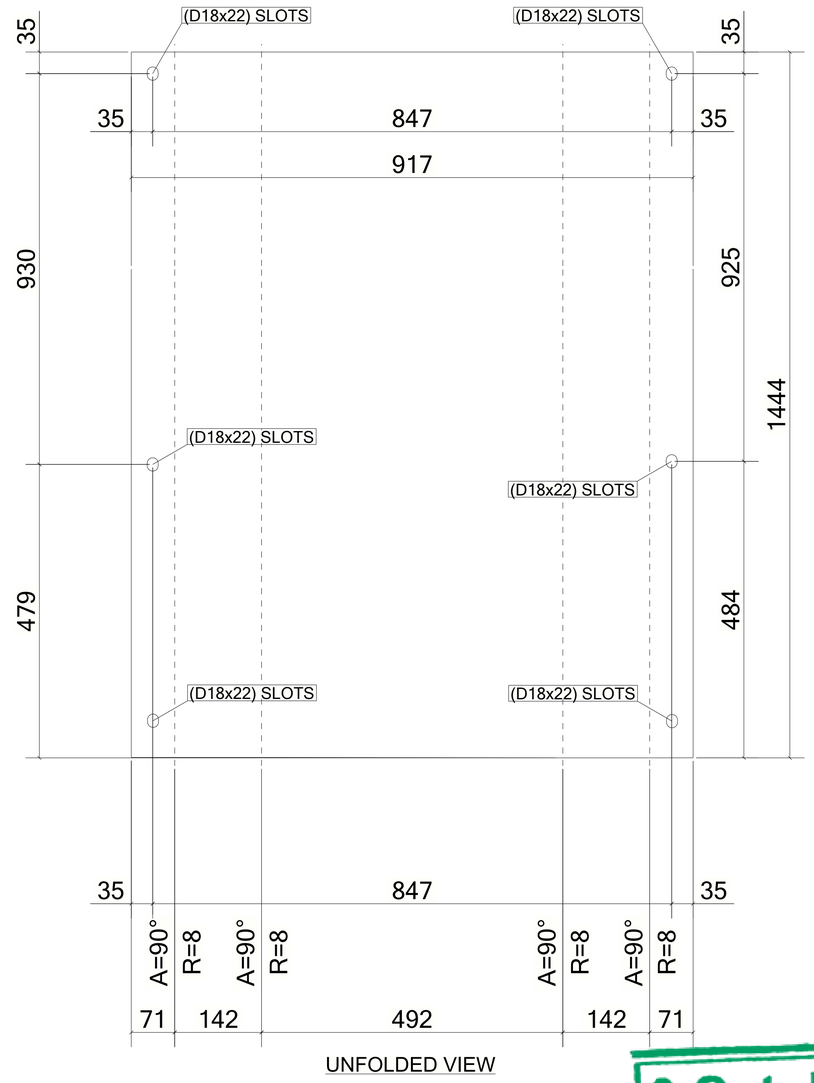

UNFOLDED VIEW

1 *REQUIRED AS DRAWN MARKED* **Z8-CHQ082**

6 October Monorail
Engineering Unit
Valid For Construction

GENERAL NOTES:

1. THE DIMENSIONS SHOWN ARE NOMINAL (IN MILLIMETERS), U.N.O.
2. WELD SIZESHALL BE AISC MINIMUM OF 6 mm UNLESS NOTED OTHERWISE.
3. ALL FIELD WELDS SHALL BE INSPECTED PER QUALITY ASSURANCE AND SPECIAL INSPECTIONS.

REFERENCE DRAWINGS

1	93M-BOA-NAT-LOT-04833
2	93M-BOA-NAT-LOT-09170
3	93M-BOA-NAT-LOT-01976
4	93M-BOA-NAT-LOT-20021
5	
6	
7	
8	
9	

6TH OF OCTOBER CITY RAIL TRANSIT MONORAIL

The Authority | Consultant: Hill International | Main Contractor: ORASCOM CONSTRUCTION / BOMBARDIER | Structural Designer: INNOVA TRANSPORTATION

KEY PLAN:

SCALE	SHOPDRAWING	DATE
AS SHOWN		12/05/2023

REV	DATE	DSG.	CHK.	APP.	AMENDMENTS	STATUS
B	12/05/2023	M.KH	M.KH	DR.M.M	ISSUED FOR INFORMATION	IFI
A	11/20/2022	M.KH	M.KH	DR.M.M	ISSUED FOR INFORMATION	IFI

DRAWING TITLE
6TH OF OCTOBER MONORAIL
SERVICE WALKWAYS
ZONE (1008)
Z8-CHQ082

Project Code	Rubric	Initiator	Lot	Ref	Number	Revision
93M	0476	ACC	60	DEP	DWG0816	0 B

Tekla structures

Same comments as
93M-0476-ACC-60DEP-DWG-08079-B.

REVIEWED WITH COMMENT
MONORAILS PROJECT

MATERIAL LIST FOR ASSEMBLY MK'D **Z8-CHQ081**

Mark	Profile	GRADE	No.	Length	Area	Weight
Z8-CHQ081	CHQD_PL5*917.1	S235JR	1	1450	2.67	51.82
				Total	2.67	51.82

BOLT LIST:-

BOLT \ STUD	BOLT DESCRIPTION		QTY	FINISH
BOLT	B1N2W16 X 40	A325M	4	
BOLT	B1N2W16 X 50	A325M	2	

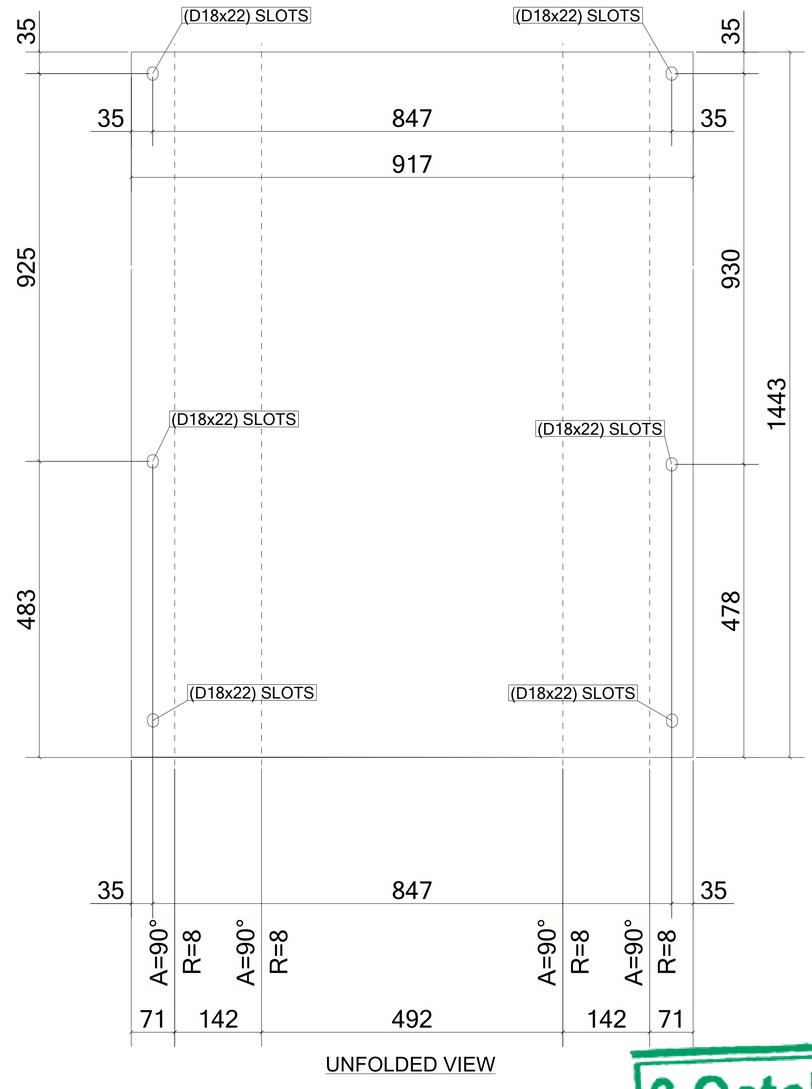

UNFOLDED VIEW

1 *REQUIRED AS DRAWN MARKED* **Z8-CHQ081**

6 October Monorail
Engineering Unit
Valid For Construction

GENERAL NOTES:

1. THE DIMENSIONS SHOWN ARE NOMINAL (IN MILLIMETERS), U.N.O.
2. WELD SIZESHALL BE AISC MINIMUM OF 6 mm UNLESS NOTED OTHERWISE.
3. ALL FIELD WELDS SHALL BE INSPECTED PER QUALITY ASSURANCE AND SPECIAL INSPECTIONS.

REFERENCE DRAWINGS

1	93M-BOA-NAT-LOT-04833
2	93M-BOA-NAT-LOT-09170
3	93M-BOA-NAT-LOT-01976
4	93M-BOA-NAT-LOT-20021
5	
6	
7	
8	
9	

6TH OF OCTOBER CITY RAIL TRANSIT MONORAIL

The Authority | Consultant: Hill International | Main Contractor: ORASCOM CONSTRUCTION, BOMBARDIER | Structural Designer: INNOVA TRANSPORTATION

KEY PLAN:

SCALE	SHOPDRAWING	DATE
AS SHOWN		12/05/2023

REV	DATE	DSG.	CHK.	APP.	AMENDMENTS	STATUS
B	12/05/2023	M.KH	M.KH	DR.M.M	ISSUED FOR INFORMATION	IFI
A	11/20/2022	M.KH	M.KH	DR.M.M	ISSUED FOR INFORMATION	IFI

DRAWING TITLE
6TH OF OCTOBER MONORAIL
SERVICE WALKWAYS
ZONE (1008)
Z8-CHQ081

Project Code	Rubric	Initiator	Lot	Ref	Number	Revision
93M0476	ACC	60	DEP	DWG	08159	B

Tekla structures

Same comments as
93M-0476-ACC-60DEP-DWG-08079-B.

REVIEWED WITH COMMENT
MONORAILS PROJECT

MATERIAL LIST FOR ASSEMBLY MK'D **Z8-CHQ080**

Mark	Profile	GRADE	No.	Length	Area	Weight
Z8-CHQ080	CHQD_PL5*917.1	S235JR	1	1799	3.33	64.62
				Total	3.33	64.62

BOLT LIST:-

BOLT \ STUD	BOLT DESCRIPTION		QTY	FINISH
BOLT	B1N2W16 X 40	A325M	2	
BOLT	B1N2W16 X 50	A325M	2	

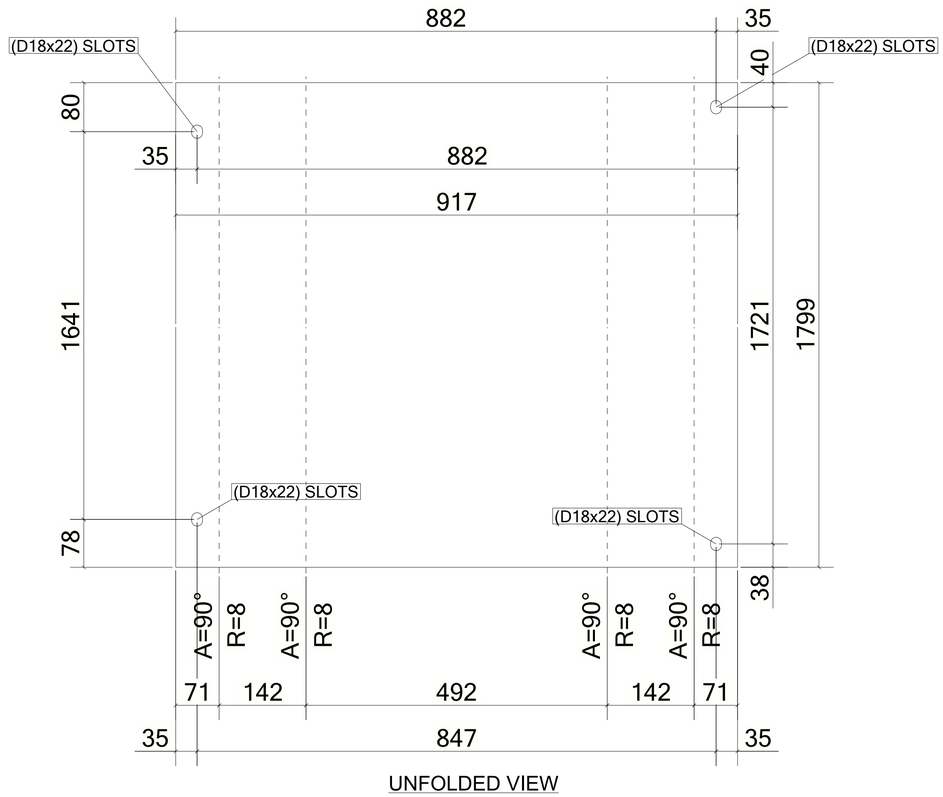

UNFOLDED VIEW

1 *REQUIRED AS DRAWN MARKED* **Z8-CHQ080**

6 October Monorail
Engineering Unit
Valid For Construction

GENERAL NOTES:

1. THE DIMENSIONS SHOWN ARE NOMINAL (IN MILLIMETERS), U.N.O.
2. WELD SIZESHALL BE AISC MINIMUM OF 6 mm UNLESS NOTED OTHERWISE.
3. ALL FIELD WELDS SHALL BE INSPECTED PER QUALITY ASSURANCE AND SPECIAL INSPECTIONS.

REFERENCE DRAWINGS

1	93M-BOA-NAT-LOT-04833
2	93M-BOA-NAT-LOT-09170
3	93M-BOA-NAT-LOT-01976
4	93M-BOA-NAT-LOT-20021
5	
6	
7	
8	
9	

6TH OF OCTOBER CITY RAIL TRANSIT MONORAIL

The Authority | Consultant: Hill International | Main Contractor: ORASCOM CONSTRUCTION / BOMBARDIER | Structural Designer: INNOVA TRANSPORTATION

KEY PLAN:

SCALE	SHOPDRAWING	DATE
AS SHOWN		12/05/2023

REV	DATE	DSG.	CHK.	APP.	AMENDMENTS	STATUS
B	12/05/2023	M.KH	M.KH	DR.M.M	ISSUED FOR INFORMATION	IFI
A	11/20/2022	M.KH	M.KH	DR.M.M	ISSUED FOR INFORMATION	IFI

DRAWING TITLE
6TH OF OCTOBER MONORAIL
SERVICE WALKWAYS
ZONE (1008)
Z8-CHQ080

Project Code	Rubric	Initiator	Lot	Ref	Number	Revision
93M	047	6ACC	60DE	PDWG	08158	B

Tekla structures

Same comments as
93M-0476-ACC-60DEP-DWG-08079-B.

REVIEWED WITH COMMENT
MONORAILS PROJECT

MATERIAL LIST FOR ASSEMBLY MK'D **Z8-CHQ079**

Mark	Profile	GRADE	No.	Length	Area	Weight
Z8-CHQ079	CHQD_PL5*917.1	S235JR	1	2778	5.13	99.78
				Total	5.13	99.78

BOLT LIST:-

BOLT \ STUD	BOLT DESCRIPTION		QTY	FINISH
BOLT	B1N2W16 X 40	A325M	3	
BOLT	B1N2W16 X 50	A325M	1	

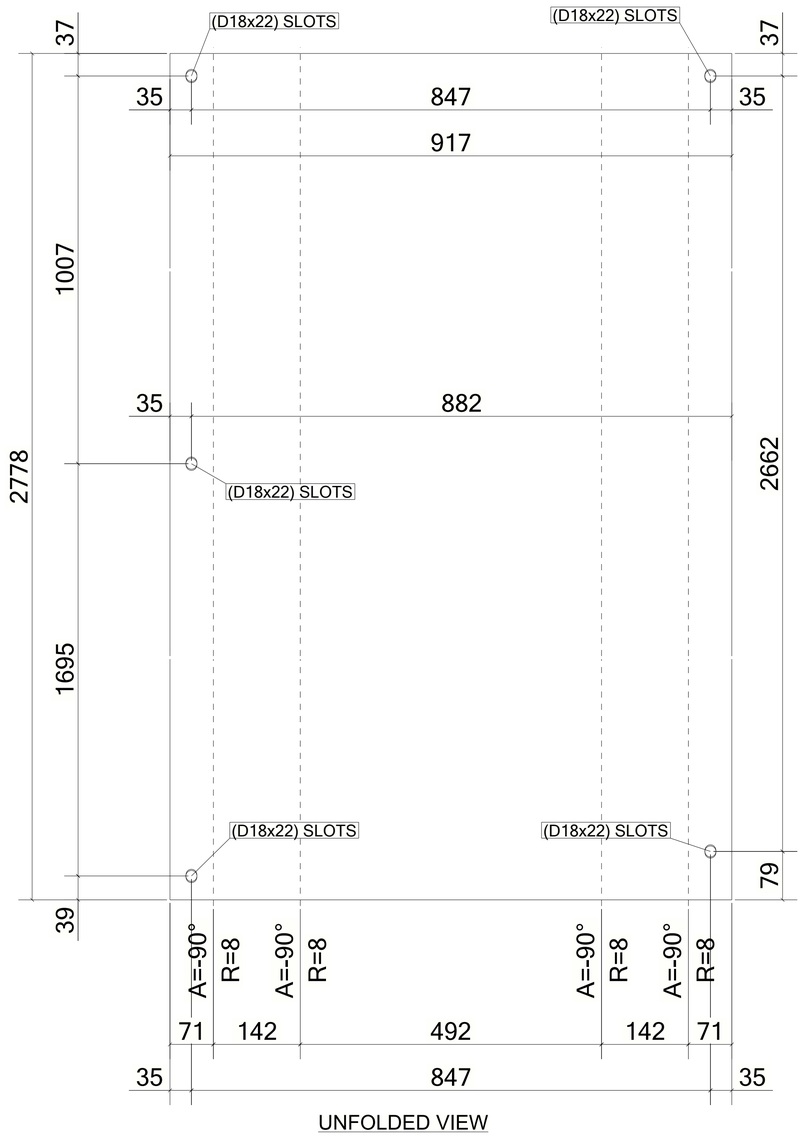

UNFOLDED VIEW

1 *REQUIRED AS DRAWN MARKED* **Z8-CHQ079**

6 October Monorail
Engineering Unit
Valid For Construction

GENERAL NOTES:

1. THE DIMENSIONS SHOWN ARE NOMINAL (IN MILLIMETERS), U.N.O.
2. WELD SIZESHALL BE AISC MINIMUM OF 6 mm UNLESS NOTED OTHERWISE.
3. ALL FIELD WELDS SHALL BE INSPECTED PER QUALITY ASSURANCE AND SPECIAL INSPECTIONS.

REFERENCE DRAWINGS

1	93M-BOA-NAT-LOT-04833
2	93M-BOA-NAT-LOT-09170
3	93M-BOA-NAT-LOT-01976
4	93M-BOA-NAT-LOT-20021
5	
6	
7	
8	
9	

6TH OF OCTOBER CITY RAIL TRANSIT MONORAIL

The Authority — Hill International (Consultant) — ORASCOM / BOMBARDIER (Main Contractor) — INNOVA TRANSPORTATION (Structural Designer)

KEY PLAN:

SCALE	SHOPDRAWING	DATE
AS SHOWN		12/05/2023

REV	DATE	DSG.	CHK.	APP.	AMENDMENTS	STATUS
B	12/05/2023	M.KH	M.KH	DR.M.M	ISSUED FOR INFORMATION	IFI
A	11/20/2022	M.KH	M.KH	DR.M.M	ISSUED FOR INFORMATION	IFI

DRAWING TITLE
6TH OF OCTOBER MONORAIL
SERVICE WALKWAYS
ZONE (1008)
Z8-CHQ079

Project Code	Rubric	Initiator	Lot	Ref	Number	Revision
93	M047	6ACC	60DE	PDWG	08157	B

Tekla structures

Same comments as
93M-0476-ACC-60DEP-DWG-08079-B.

REVIEWED WITH COMMENT
MONORAILS PROJECT

MATERIAL LIST FOR ASSEMBLY MK'D **Z8-CHQ078**

Mark	Profile	GRADE	No.	Length	Area	Weight
Z8-CHQ078	CHQD_PL5*917.1	S235JR	1	1799	3.33	64.62
				Total	3.33	64.62

BOLT LIST:-

BOLT \ STUD	BOLT DESCRIPTION	QTY	FINISH
BOLT	B1N2W16 X 50 A325M	2	

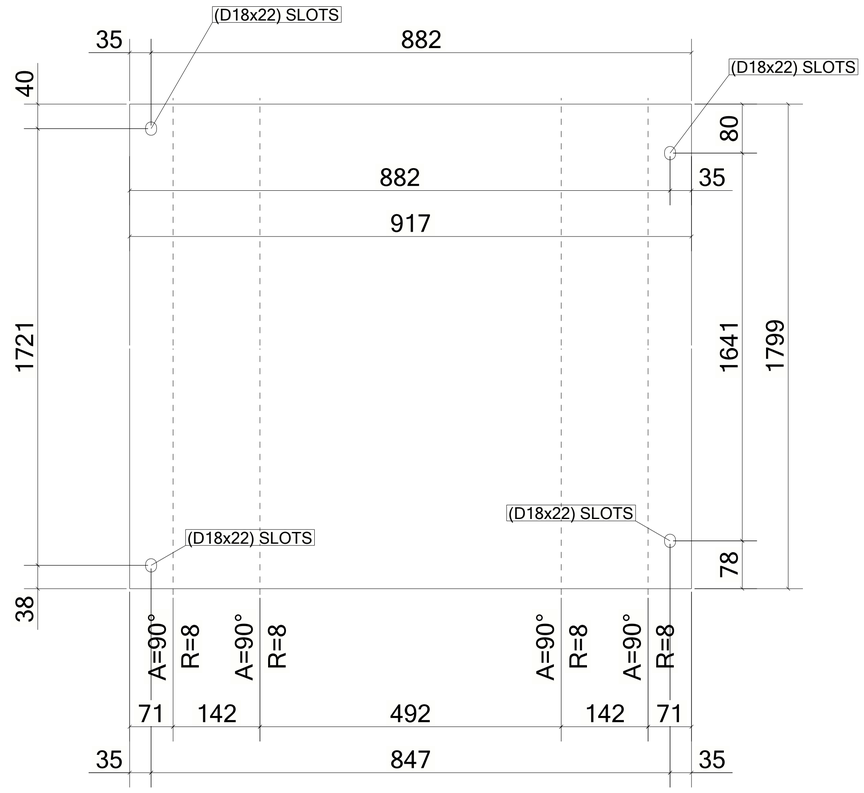

UNFOLDED VIEW

1 *REQUIRED AS DRAWN MARKED* **Z8-CHQ078**

6 October Monorail
Engineering Unit
Valid For Construction

GENERAL NOTES:

1. THE DIMENSIONS SHOWN ARE NOMINAL (IN MILLIMETERS), U.N.O.
2. WELD SIZESHALL BE AISC MINIMUM OF 6 mm UNLESS NOTED OTHERWISE.
3. ALL FIELD WELDS SHALL BE INSPECTED PER QUALITY ASSURANCE AND SPECIAL INSPECTIONS.

REFERENCE DRAWINGS

1	93M-BOA-NAT-LOT-04833
2	93M-BOA-NAT-LOT-09170
3	93M-BOA-NAT-LOT-01976
4	93M-BOA-NAT-LOT-20021
5	
6	
7	
8	
9	

6TH OF OCTOBER CITY RAIL TRANSIT MONORAIL

The Authority | Consultant: Hill International | Main Contractor: ORASCOM CONSTRUCTION, BOMBARDIER | Structural Designer: INNOVA TRANSPORTATION

KEY PLAN:

SCALE	SHOPDRAWING	DATE
AS SHOWN		12/05/2023

REV	DATE	DSG.	CHK.	APP.	AMENDMENTS	STATUS
B	12/05/2023	M.KH	M.KH	DR.M.M	ISSUED FOR INFORMATION	IFI
A	11/20/2022	M.KH	M.KH	DR.M.M	ISSUED FOR INFORMATION	IFI

DRAWING TITLE
6TH OF OCTOBER MONORAIL
SERVICE WALKWAYS
ZONE (1008)
Z8-CHQ078

Project Code	Rubric	Initiator	Lot	Ref	Number	Revision
93M047	6ACC	60DEP	DWG	08156		B

Tekla structures

Same comments as
93M-0476-ACC-60DEP-DWG-08079-B.

REVIEWED WITH COMMENT
MONORAILS PROJECT

MATERIAL LIST FOR ASSEMBLY MK'D **Z8-CHQ077**

Mark	Profile	GRADE	No.	Length	Area	Weight
Z8-CHQ077	CHQD_PL5*917.1	S235JR	1	1698	3.14	60.98
				Total	3.14	60.98

BOLT LIST:-

BOLT \ STUD	BOLT DESCRIPTION	QTY	FINISH
BOLT	B1N2W16 X 50 A325M	1	

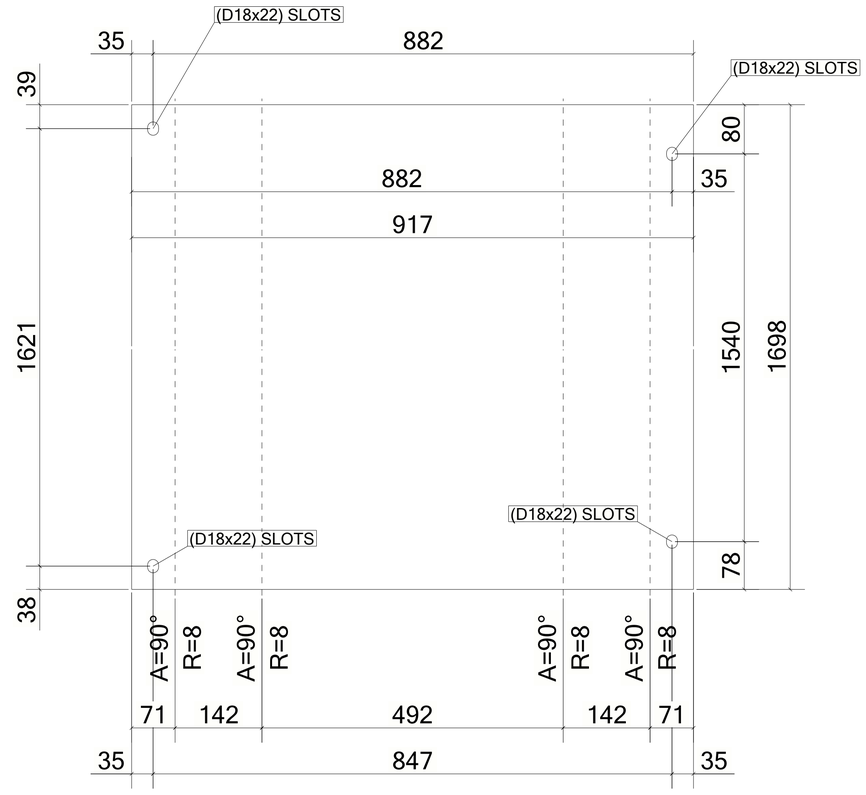

UNFOLDED VIEW

1 *REQUIRED AS DRAWN MARKED* **Z8-CHQ077**

6 October Monorail
Engineering Unit
Valid For Construction

GENERAL NOTES:

1. THE DIMENSIONS SHOWN ARE NOMINAL (IN MILLIMETERS), U.N.O.
2. WELD SIZESHALL BE AISC MINIMUM OF 6 mm UNLESS NOTED OTHERWISE.
3. ALL FIELD WELDS SHALL BE INSPECTED PER QUALITY ASSURANCE AND SPECIAL INSPECTIONS.

REFERENCE DRAWINGS

1	93M-BOA-NAT-LOT-04833
2	93M-BOA-NAT-LOT-09170
3	93M-BOA-NAT-LOT-01976
4	93M-BOA-NAT-LOT-20021
5	
6	
7	
8	
9	

6TH OF OCTOBER CITY RAIL TRANSIT MONORAIL

The Authority | Consultant: Hill International | Main Contractor: ORASCOM CONSTRUCTION, BOMBARDIER | Structural Designer: INNOVA TRANSPORTATION

KEY PLAN:

SCALE	SHOPDRAWING	DATE
AS SHOWN		12/05/2023

REV	DATE	DSG.	CHK.	APP.	AMENDMENTS	STATUS
B	12/05/2023	M.KH	M.KH	DR.M.M	ISSUED FOR INFORMATION	IFI
A	11/20/2022	M.KH	M.KH	DR.M.M	ISSUED FOR INFORMATION	IFI

DRAWING TITLE
6TH OF OCTOBER MONORAIL
SERVICE WALKWAYS
ZONE (1008)
Z8-CHQ077

Project Code	Rubric	Initiator	Lot	Ref	Number	Revision
93M	0476	ACC	60DEP	DWG	08155	B

Tekla structures

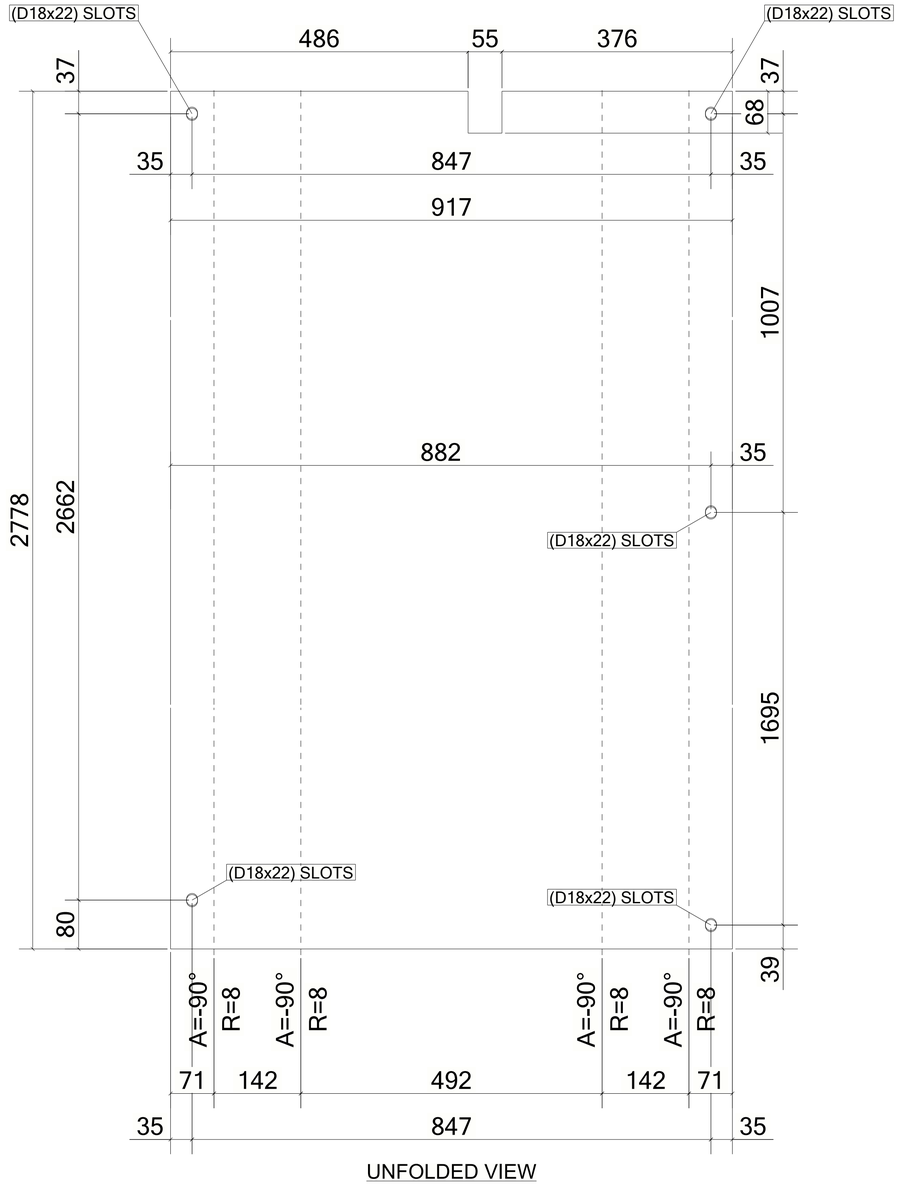

UNFOLDED VIEW

MATERIAL LIST FOR ASSEMBLY MK'D **Z8-CHQ076**						
Mark	Profile	GRADE	No.	Length	Area	Weight
Z8-CHQ076	CHQD_PL5*917.1	S235JR	1	2778	5.12	99.63
				Total	5.12	99.63

BOLT LIST:-

BOLT \ STUD	BOLT DESCRIPTION		QTY	FINISH
BOLT	B1N2W16 X 40	A325M	4	
BOLT	B1N2W16 X 50	A325M	1	

Same comments as 93M-0476-ACC-60DEP-DWG-08079-B.

REVIEWED WITH COMMENT MONORAILS PROJECT

1 *REQUIRED AS DRAWN MARKED* **Z8-CHQ076**

GENERAL NOTES:

1. THE DIMENSIONS SHOWN ARE NOMINAL (IN MILLIMETERS), U.N.O.
2. WELD SIZESHALL BE AISC MINIMUM OF 6 mm UNLESS NOTED OTHERWISE.
3. ALL FIELD WELDS SHALL BE INSPECTED PER QUALITY ASSURANCE AND SPECIAL INSPECTIONS.

REFERENCE DRAWINGS

1	93M-BOA-NAT-LOT-04833
2	93M-BOA-NAT-LOT-09170
3	93M-BOA-NAT-LOT-01976
4	93M-BOA-NAT-LOT-20021
5	
6	
7	
8	
9	

6TH OF OCTOBER CITY RAIL TRANSIT MONORAIL

The Authority | Hill International Consultant | ORASCOM / BOMBARDIER Main Contractor | INNOVA Structural Designer

KEY PLAN:

6 October Monorail Engineering Unit Valid For Construction

SCALE: AS SHOWN | SHOPDRAWING | DATE: 12/05/2023

REV	DATE	DSG.	CHK.	APP.	AMENDMENTS	STATUS
B	12/05/2023	M.KH	M.KH	DR.M.M	ISSUED FOR INFORMATION	IFI
A	11/20/2022	M.KH	M.KH	DR.M.M	ISSUED FOR INFORMATION	IFI

DRAWING TITLE
6TH OF OCTOBER MONORAIL
SERVICE WALKWAYS
ZONE (1008)
Z8-CHQ076

Project Code	Rubric	Initiator	Lot	Ref	Number	Revision
93M	047	6ACC	60DEP	DWG	08154	B

Tekla structures

Same comments as 93M-0476-ACC-60DEP-DWG-08079-B.

REVIEWED WITH COMMENT
MONORAILS PROJECT

MATERIAL LIST FOR ASSEMBLY MK'D **Z8-CHQ075**

Mark	Profile	GRADE	No.	Length	Area	Weight
Z8-CHQ075	CHQD_PL5*817.1	S235JR	1	1120	1.85	35.83
				Total	1.85	35.83

BOLT LIST:-

BOLT \ STUD	BOLT DESCRIPTION	QTY	FINISH
BOLT	B1N2W16 X 40 A325M	4	

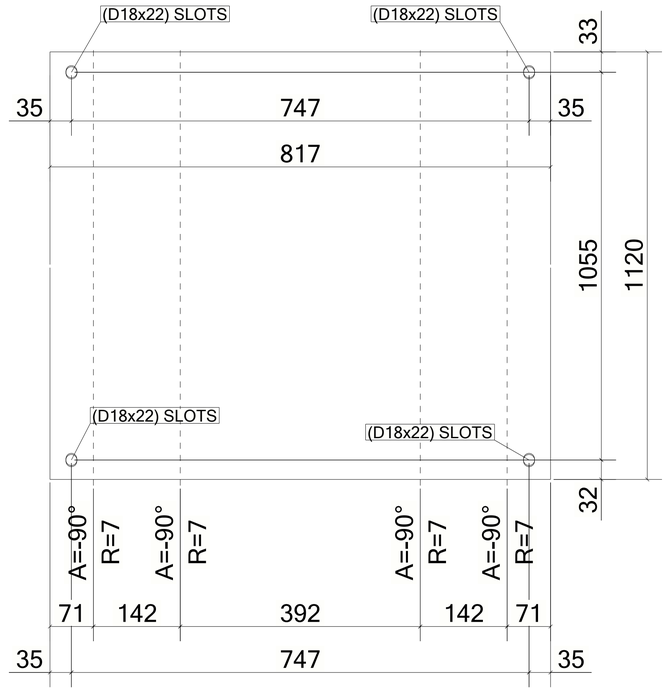

UNFOLDED VIEW

1 *REQUIRED AS DRAWN MARKED* **Z8-CHQ075**

6 October Monorail
Engineering Unit
Valid For Construction

GENERAL NOTES:

1. THE DIMENSIONS SHOWN ARE NOMINAL (IN MILLIMETERS), U.N.O.
2. WELD SIZESHALL BE AISC MINIMUM OF 6 mm UNLESS NOTED OTHERWISE.
3. ALL FIELD WELDS SHALL BE INSPECTED PER QUALITY ASSURANCE AND SPECIAL INSPECTIONS.

REFERENCE DRAWINGS

1	93M-BOA-NAT-LOT-04833
2	93M-BOA-NAT-LOT-09170
3	93M-BOA-NAT-LOT-01976
4	93M-BOA-NAT-LOT-20021
5	
6	
7	
8	
9	

6TH OF OCTOBER CITY RAIL TRANSIT MONORAIL

The Authority | Hill International Consultant | Main Contractor | Structural Designer

KEY PLAN:

SCALE: AS SHOWN | SHOPDRAWING | DATE: 12/05/2023

REV	DATE	DSG.	CHK.	APP.	AMENDMENTS	STATUS
B	12/05/2023	M.KH	M.KH	DR.M.M	ISSUED FOR INFORMATION	IFI
A	11/20/2022	M.KH	M.KH	DR.M.M	ISSUED FOR INFORMATION	IFI

DRAWING TITLE
6TH OF OCTOBER MONORAIL
SERVICE WALKWAYS
ZONE (1008)
Z8-CHQ075

Project Code	Rubric	Initiator	Lot	Ref	Number	Revision
93M	047	6ACC	60DEP	DWG	08153	B

Tekla structures

Same comments as
93M-0476-ACC-60DEP-DWG-08079-B.

REVIEWED WITH
COMMENT
MONORAILS PROJECT

MATERIAL LIST FOR ASSEMBLY MK'D **Z8-CHQ074**

Mark	Profile	GRADE	No.	Length	Area	Weight
Z8-CHQ074	CHQD_PL5*817.1	S235JR	1	1120	1.85	35.83
				Total	1.85	35.83

BOLT LIST:-

BOLT \ STUD	BOLT DESCRIPTION	QTY	FINISH
BOLT	B1N2W16 X 40 A325M	4	

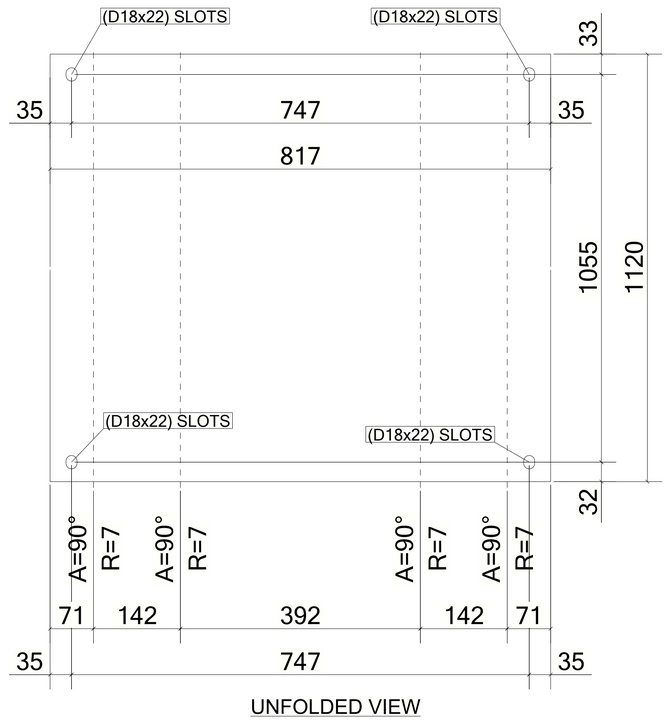

UNFOLDED VIEW

3 *REQUIRED AS DRAWN MARKED* **Z8-CHQ074**

6 October: Monorail
Engineering Unit
Valid For Construction

GENERAL NOTES:

1. THE DIMENSIONS SHOWN ARE NOMINAL (IN MILLIMETERS), U.N.O.
2. WELD SIZESHALL BE AISC MINIMUM OF 6 mm UNLESS NOTED OTHERWISE.
3. ALL FIELD WELDS SHALL BE INSPECTED PER QUALITY ASSURANCE AND SPECIAL INSPECTIONS.

REFERENCE DRAWINGS

1	93M-BOA-NAT-LOT-04833
2	93M-BOA-NAT-LOT-09170
3	93M-BOA-NAT-LOT-01976
4	93M-BOA-NAT-LOT-20021
5	
6	
7	
8	
9	

6TH OF OCTOBER CITY RAIL TRANSIT MONORAIL

The Authority — Hill International Consultant — Main Contractor — Structural Designer

KEY PLAN:

SCALE: AS SHOWN | SHOPDRAWING | DATE: 12/05/2023

REV	DATE	DSG.	CHK.	APP.	AMENDMENTS	STATUS
B	12/05/2023	M.KH	M.KH	DR.M.M	ISSUED FOR INFORMATION	IFI
A	11/20/2022	M.KH	M.KH	DR.M.M	ISSUED FOR INFORMATION	IFI

DRAWING TITLE
6TH OF OCTOBER MONORAIL
SERVICE WALKWAYS
ZONE (1008)
Z8-CHQ074

Project Code	Rubric	Initiator	Lot	Ref	Number	Revision
93	M047	6ACC	60DEP	DWG	08152	B

Tekla structures

Same comments as
93M-0476-ACC-60DEP-DWG-08079-B.

REVIEWED WITH COMMENT
MONORAILS PROJECT

MATERIAL LIST FOR ASSEMBLY MK'D **Z8-CHQ073**

Mark	Profile	GRADE	No.	Length	Area	Weight
Z8-CHQ073	CHQD5*1103.4	S235JR	1	1550	3.22	62.55
				Total	3.22	62.55

BOLT LIST:-

BOLT \ STUD	BOLT DESCRIPTION	QTY	FINISH
BOLT	B1N2W16 X 50 A325M	4	

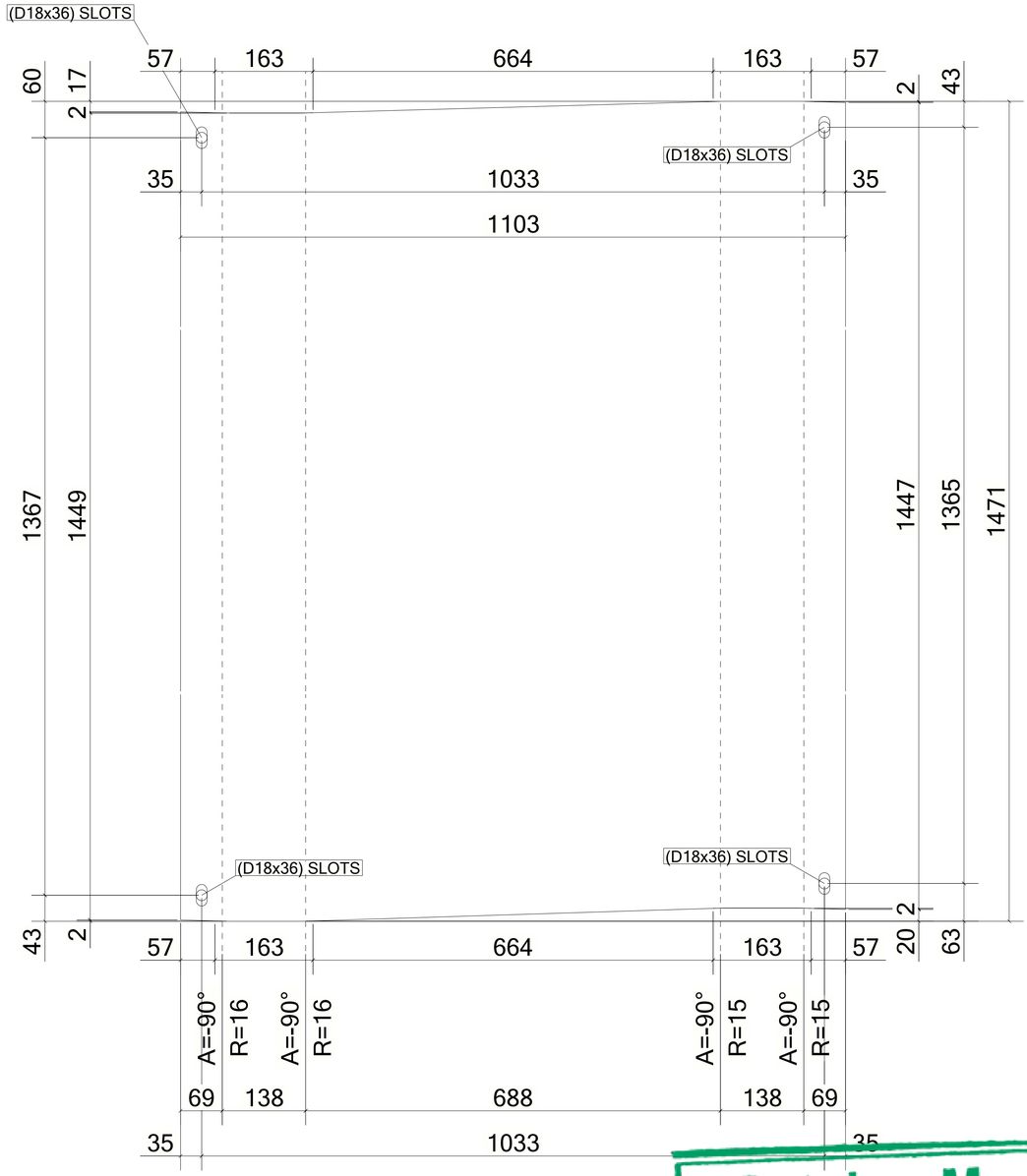

UNFOLDED VIEW

1 *REQUIRED AS DRAWN MARKED* **Z8-CHQ073**

6 October Monorail
Engineering Unit
Valid For Construction

GENERAL NOTES:

1. THE DIMENSIONS SHOWN ARE NOMINAL (IN MILLIMETERS), U.N.O.
2. WELD SIZESHALL BE AISC MINIMUM OF 6 mm UNLESS NOTED OTHERWISE.
3. ALL FIELD WELDS SHALL BE INSPECTED PER QUALITY ASSURANCE AND SPECIAL INSPECTIONS.

REFERENCE DRAWINGS

1	93M-BOA-NAT-LOT-04833
2	93M-BOA-NAT-LOT-09170
3	93M-BOA-NAT-LOT-01976
4	93M-BOA-NAT-LOT-20021
5	
6	
7	
8	
9	

6TH OF OCTOBER CITY RAIL TRANSIT MONORAIL

The Authority | Hill International Consultant | Main Contractor | Structural Designer

KEY PLAN:

SCALE: AS SHOWN | SHOPDRAWING | DATE: 12/05/2023

REV	DATE	DSG.	CHK.	APP.	AMENDMENTS	STATUS
B	12/05/2023	M.KH	M.KH	DR.M.M	ISSUED FOR INFORMATION	IFI
A	11/20/2022	M.KH	M.KH	DR.M.M	ISSUED FOR INFORMATION	IFI

DRAWING TITLE
6TH OF OCTOBER MONORAIL
SERVICE WALKWAYS
ZONE (1008)
Z8-CHQ073

Project Code	Rubric	Initiator	Lot	Ref	Number	Revision
93M	0476	ACC	60DEP	DWG	08151	B

Tekla structures

Same comments as
93M-0476-ACC-60DEP-DWG-08079-B.

REVIEWED WITH COMMENT
MONORAILS PROJECT

MATERIAL LIST FOR ASSEMBLY MK'D **Z8-CHQ072**

Mark	Profile	GRADE	No.	Length	Area	Weight
Z8-CHQ072	CHQD5*1103.4	S235JR	1	3079	6.61	128.62
				Total	6.61	128.62

BOLT LIST:-

BOLT \ STUD	BOLT DESCRIPTION	QTY	FINISH
BOLT	B1N2W16 X 50 A325M	4	

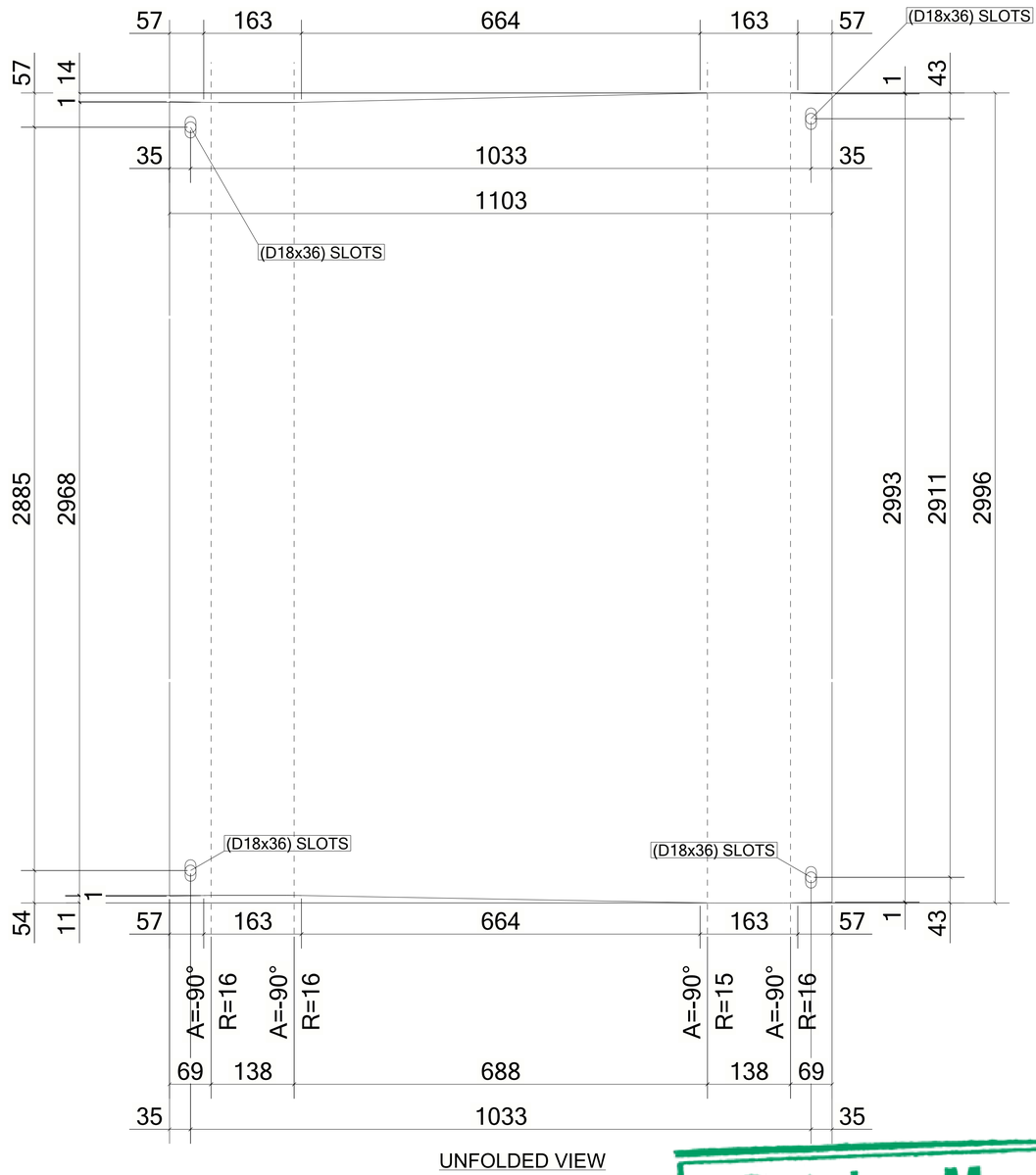

UNFOLDED VIEW

1 *REQUIRED AS DRAWN MARKED* **Z8-CHQ072**

6 October Monorail
Engineering Unit
Valid For Construction

GENERAL NOTES:

1. THE DIMENSIONS SHOWN ARE NOMINAL (IN MILLIMETERS), U.N.O.
2. WELD SIZESHALL BE AISC MINIMUM OF 6 mm UNLESS NOTED OTHERWISE.
3. ALL FIELD WELDS SHALL BE INSPECTED PER QUALITY ASSURANCE AND SPECIAL INSPECTIONS.

REFERENCE DRAWINGS

1	93M-BOA-NAT-LOT-04833
2	93M-BOA-NAT-LOT-09170
3	93M-BOA-NAT-LOT-01976
4	93M-BOA-NAT-LOT-20021
5	
6	
7	
8	
9	

6TH OF OCTOBER CITY RAIL TRANSIT MONORAIL

The Authority | Consultant: Hill International | Main Contractor: ORASCOM CONSTRUCTION, BOMBARDIER | Structural Designer: INNOVA TRANSPORTATION

KEY PLAN:

SCALE: AS SHOWN | SHOPDRAWING | DATE: 12/05/2023

REV	DATE	DSG.	CHK.	APP.	AMENDMENTS	STATUS
B	12/05/2023	M.KH	M.KH	DR.M.M	ISSUED FOR INFORMATION	IFI
A	11/20/2022	M.KH	M.KH	DR.M.M	ISSUED FOR INFORMATION	IFI

DRAWING TITLE
6TH OF OCTOBER MONORAIL
SERVICE WALKWAYS
ZONE (1008)
Z8-CHQ072

Project Code	Rubric	Initiator	Lot	Ref	Number	Revision
93M	0476	ACC	60DEP	DWG	08150	B

Tekla structures

Same comments as
93M-0476-ACC-60DEP-DWG-08079-B.

REVIEWED WITH COMMENT
MONORAILS PROJECT

MATERIAL LIST FOR ASSEMBLY MK'D **Z8-CHQ071**						
Mark	Profile	GRADE	No.	Length	Area	Weight
Z8-CHQ071	CHQD5*1103.4	S235JR	1	3075	6.60	128.40
				Total	6.60	128.40

BOLT LIST:-

BOLT \ STUD	BOLT DESCRIPTION	QTY	FINISH
BOLT	B1N2W16 X 50 A325M	4	

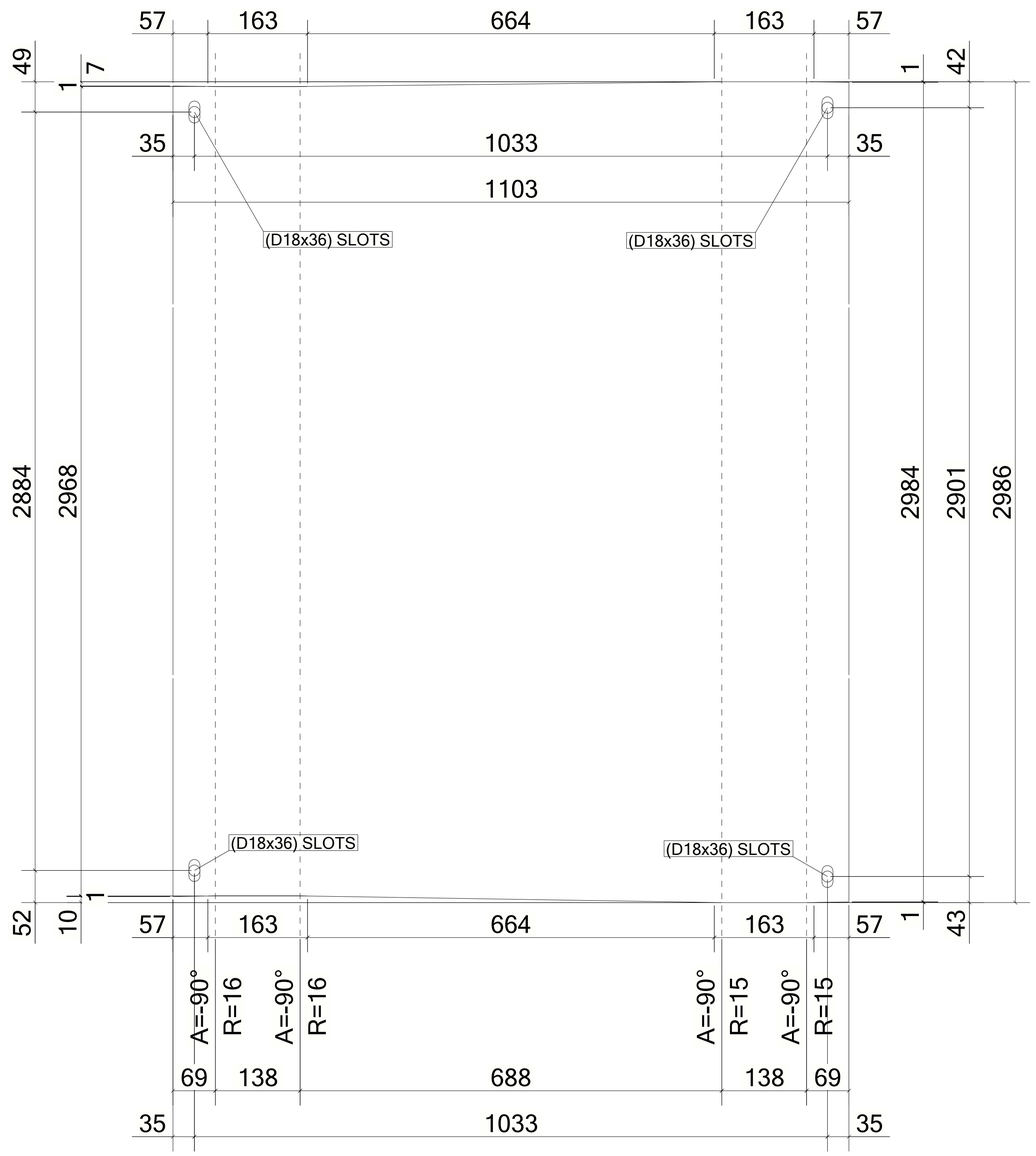

UNFOLDED VIEW

1 *REQUIRED AS DRAWN MARKED* **Z8-CHQ071**

6 October Monorail
Engineering Unit
Valid For Construction

GENERAL NOTES:

1. THE DIMENSIONS SHOWN ARE NOMINAL (IN MILLIMETERS), U.N.O.
2. WELD SIZESHALL BE AISC MINIMUM OF 6 mm UNLESS NOTED OTHERWISE.
3. ALL FIELD WELDS SHALL BE INSPECTED PER QUALITY ASSURANCE AND SPECIAL INSPECTIONS.

REFERENCE DRAWINGS

1	93M-BOA-NAT-LOT-04833
2	93M-BOA-NAT-LOT-09170
3	93M-BOA-NAT-LOT-01976
4	93M-BOA-NAT-LOT-20021
5	
6	
7	
8	
9	

6TH OF OCTOBER CITY RAIL TRANSIT MONORAIL

The Authority | Consultant: Hill International | Main Contractor: ORASCOM CONSTRUCTION / BOMBARDIER | Structural Designer: INNOVA TRANSPORTATION

KEY PLAN:

SCALE	SHOPDRAWING	DATE
AS SHOWN		12/05/2023

REV	DATE	DSG.	CHK.	APP.	AMENDMENTS	STATUS
B	12/05/2023	M.KH	M.KH	DR.M.M	ISSUED FOR INFORMATION	IFI
A	11/20/2022	M.KH	M.KH	DR.M.M	ISSUED FOR INFORMATION	IFI

DRAWING TITLE
6TH OF OCTOBER MONORAIL
SERVICE WALKWAYS
ZONE (1008)
Z8-CHQ071

Project Code	Rubric	Initiator	Lot	Ref	Number	Revision
93M	047	6ACC	60DE	PDWG	08149	B

Tekla structures

Same comments as
93M-0476-ACC-60DEP-DWG-08079-B.

REVIEWED WITH COMMENT
MONORAILS PROJECT

MATERIAL LIST FOR ASSEMBLY MK'D **Z8-CHQ070**

Mark	Profile	GRADE	No.	Length	Area	Weight
Z8-CHQ070	CHQD5*1103.4	S235JR	1	2368	5.04	97.87
				Total	5.04	97.87

BOLT LIST:-

BOLT \ STUD	BOLT DESCRIPTION	QTY	FINISH
BOLT	B1N2W16 X 50 A325M	4	

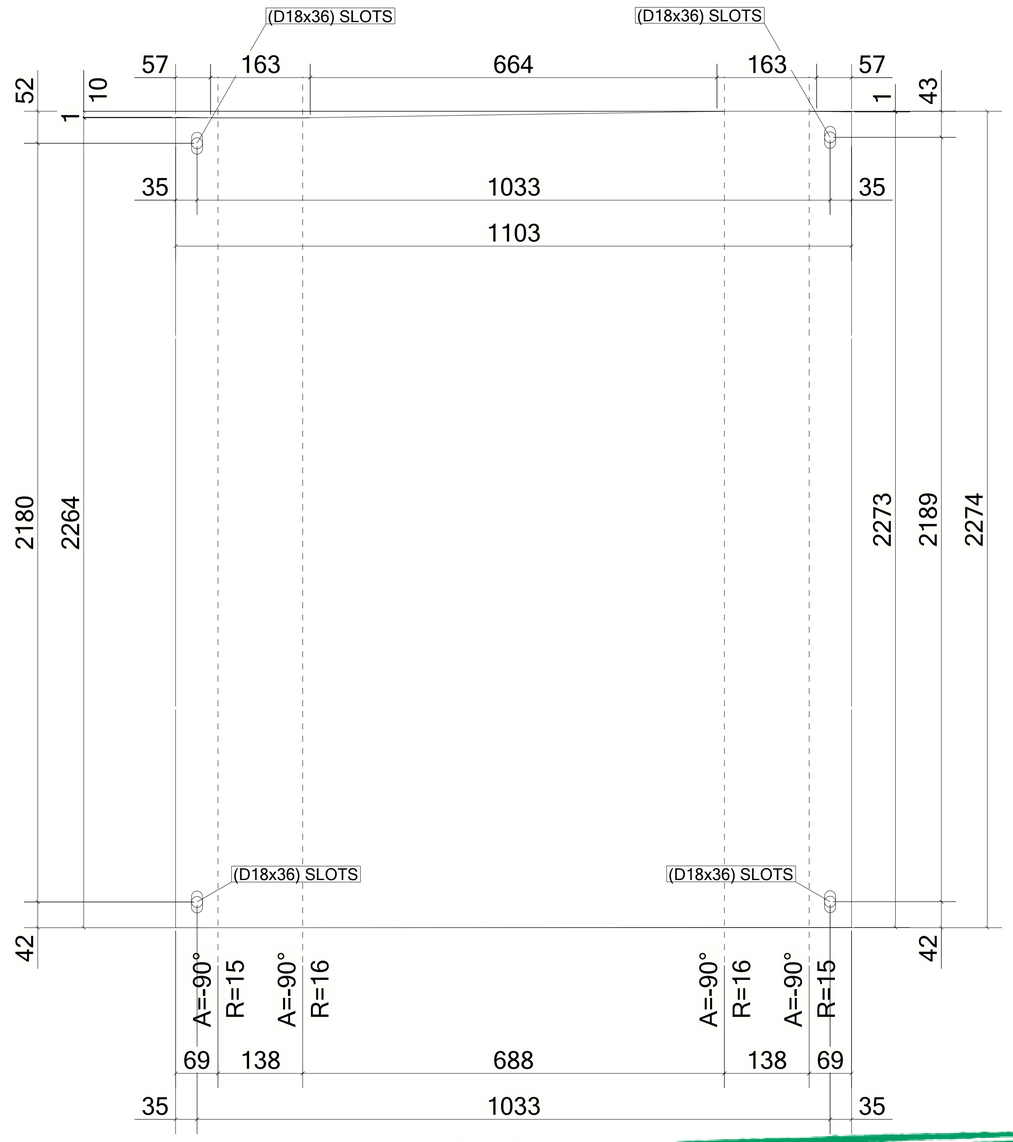

UNFOLDED VIEW

1 *REQUIRED AS DRAWN MARKED* **Z8-CHQ070**

6 October Monorail
Engineering Unit
Valid For Construction

GENERAL NOTES:

1. THE DIMENSIONS SHOWN ARE NOMINAL (IN MILLIMETERS), U.N.O.
2. WELD SIZESHALL BE AISC MINIMUM OF 6 mm UNLESS NOTED OTHERWISE.
3. ALL FIELD WELDS SHALL BE INSPECTED PER QUALITY ASSURANCE AND SPECIAL INSPECTIONS.

REFERENCE DRAWINGS

1	93M-BOA-NAT-LOT-04833
2	93M-BOA-NAT-LOT-09170
3	93M-BOA-NAT-LOT-01976
4	93M-BOA-NAT-LOT-20021
5	
6	
7	
8	
9	

6TH OF OCTOBER CITY RAIL TRANSIT MONORAIL

The Authority | Consultant: Hill International | Main Contractor: ORASCOM CONSTRUCTION / BOMBARDIER | Structural Designer: INNOVA TRANSPORTATION

KEY PLAN:

SCALE	SHOPDRAWING	DATE
AS SHOWN		12/05/2023

REV	DATE	DSG.	CHK.	APP.	AMENDMENTS	STATUS
B	12/05/2023	M.KH	M.KH	DR.M.M	ISSUED FOR INFORMATION	IFI
A	11/20/2022	M.KH	M.KH	DR.M.M	ISSUED FOR INFORMATION	IFI

DRAWING TITLE
6TH OF OCTOBER MONORAIL
SERVICE WALKWAYS
ZONE (1008)
Z8-CHQ070

Project Code	Rubric	Initiator	Lot	Ref	Number	Revision
93M	0476	ACC	60DEP	DWG	08148	B

Tekla structures

Same comments as
93M-0476-ACC-60DEP-DWG-08079-B.

REVIEWED WITH COMMENT
MONORAILS PROJECT

MATERIAL LIST FOR ASSEMBLY MK'D **Z8-CHQ069**

Mark	Profile	GRADE	No.	Length	Area	Weight
Z8-CHQ069	CHQD5*1103.4	S235JR	1	2360	5.02	97.60
				Total	5.02	97.60

BOLT LIST:-

BOLT \ STUD	BOLT DESCRIPTION	QTY	FINISH
BOLT	B1N2W16 X 50 A325M	4	

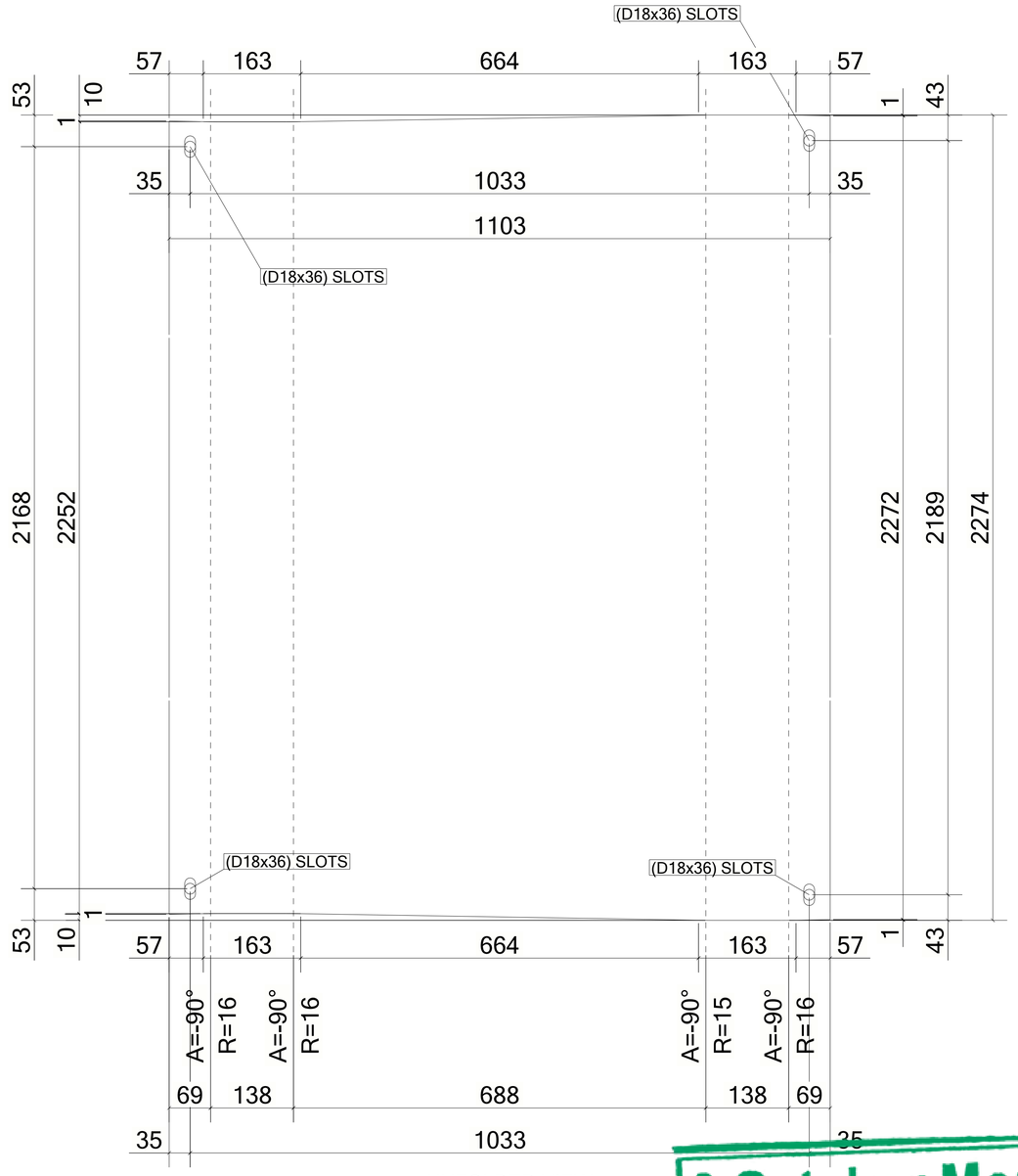

UNFOLDED VIEW

1 *REQUIRED AS DRAWN MARKED* **Z8-CHQ069**

6 October Monorail
Engineering Unit
Valid For Construction

GENERAL NOTES:

1. THE DIMENSIONS SHOWN ARE NOMINAL (IN MILLIMETERS), U.N.O.
2. WELD SIZESHALL BE AISC MINIMUM OF 6 mm UNLESS NOTED OTHERWISE.
3. ALL FIELD WELDS SHALL BE INSPECTED PER QUALITY ASSURANCE AND SPECIAL INSPECTIONS.

REFERENCE DRAWINGS

1	93M-BOA-NAT-LOT-04833
2	93M-BOA-NAT-LOT-09170
3	93M-BOA-NAT-LOT-01976
4	93M-BOA-NAT-LOT-20021
5	
6	
7	
8	
9	

6TH OF OCTOBER CITY RAIL TRANSIT MONORAIL

The Authority | Consultant: Hill International | Main Contractor: ORASCOM CONSTRUCTION, BOMBARDIER | Structural Designer: INNOVA TRANSPORTATION

KEY PLAN:

SCALE: AS SHOWN | SHOPDRAWING | DATE: 12/05/2023

REV	DATE	DSG.	CHK.	APP.	AMENDMENTS	STATUS
B	12/05/2023	M.KH	M.KH	DR.M.M	ISSUED FOR INFORMATION	IFI
A	11/20/2022	M.KH	M.KH	DR.M.M	ISSUED FOR INFORMATION	IFI

DRAWING TITLE
6TH OF OCTOBER MONORAIL
SERVICE WALKWAYS
ZONE (1008)
Z8-CHQ069

Project Code	Rubric	Initiator	Lot	Ref	Number	Revision
93M	047	6ACC	60DEP	DWG	08147	B

Tekla structures

Same comments as
93M-0476-ACC-60DEP-DWG-08079-B.

REVIEWED WITH COMMENT
MONORAILS PROJECT

MATERIAL LIST FOR ASSEMBLY MK'D **Z8-CHQ068**						
Mark	Profile	GRADE	No.	Length	Area	Weight
Z8-CHQ068	CHQD5*1103.4	S235JR	1	3075	6.61	128.44
				Total	6.61	128.44

BOLT LIST:-

BOLT \ STUD	BOLT DESCRIPTION	QTY	FINISH
BOLT	B1N2W16 X 50 A325M	4	

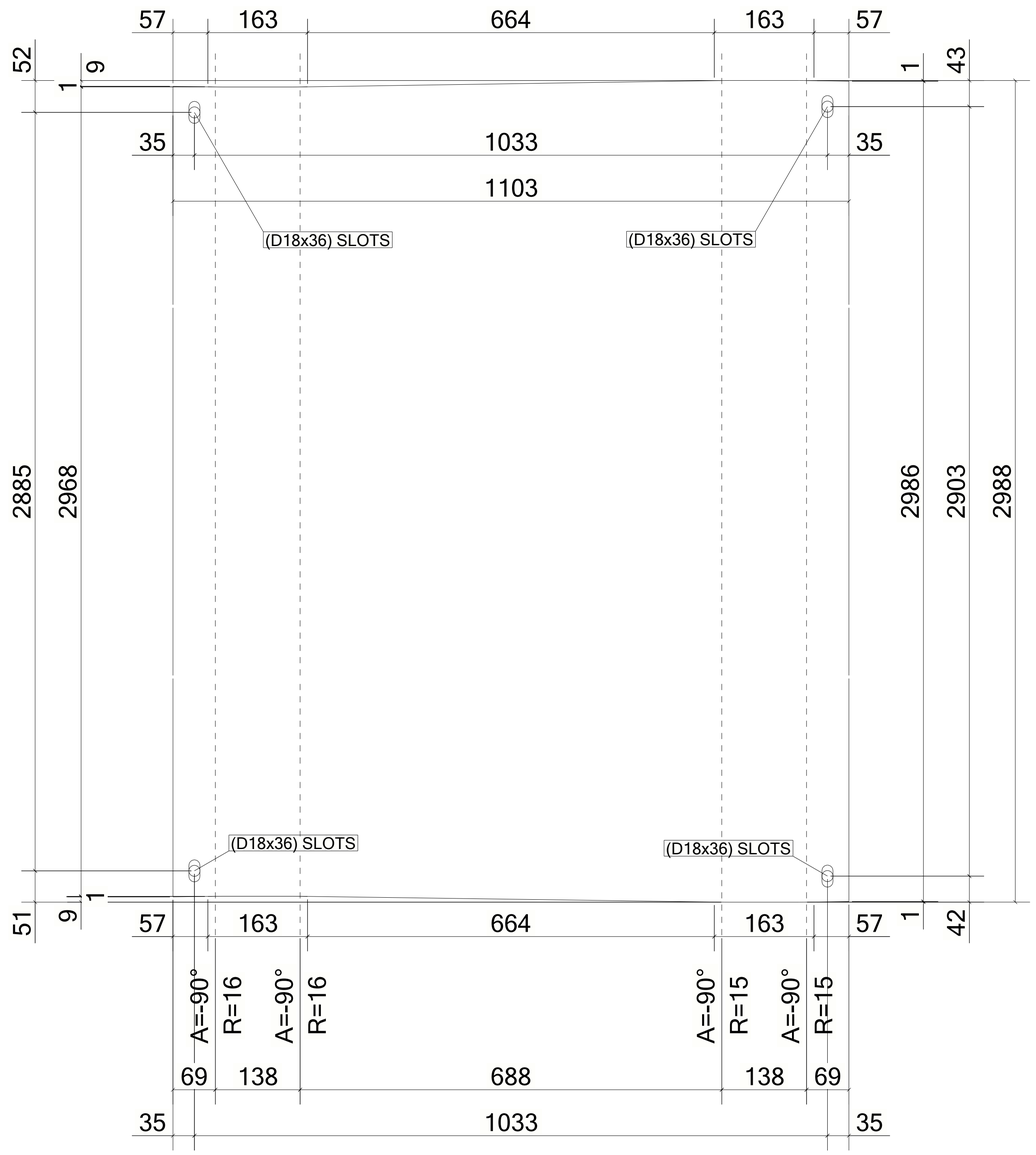

UNFOLDED VIEW

1 *REQUIRED AS DRAWN MARKED* **Z8-CHQ068**

6 October Monorail
Engineering Unit
Valid For Construction

GENERAL NOTES:

1. THE DIMENSIONS SHOWN ARE NOMINAL (IN MILLIMETERS), U.N.O.
2. WELD SIZESHALL BE AISC MINIMUM OF 6 mm UNLESS NOTED OTHERWISE.
3. ALL FIELD WELDS SHALL BE INSPECTED PER QUALITY ASSURANCE AND SPECIAL INSPECTIONS.

REFERENCE DRAWINGS

1	93M-BOA-NAT-LOT-04833
2	93M-BOA-NAT-LOT-09170
3	93M-BOA-NAT-LOT-01976
4	93M-BOA-NAT-LOT-20021
5	
6	
7	
8	
9	

6TH OF OCTOBER CITY RAIL TRANSIT MONORAIL

The Authority | Consultant: Hill International | Main Contractor: ORASCOM CONSTRUCTION / BOMBARDIER | Structural Designer: INNOVA TRANSPORTATION

KEY PLAN:

SCALE: AS SHOWN | SHOPDRAWING | DATE: 12/05/2023

REV	DATE	DSG.	CHK.	APP.	AMENDMENTS	STATUS
B	12/05/2023	M.KH	M.KH	DR.M.M	ISSUED FOR INFORMATION	IFI
A	11/20/2022	M.KH	M.KH	DR.M.M	ISSUED FOR INFORMATION	IFI

DRAWING TITLE
6TH OF OCTOBER MONORAIL
SERVICE WALKWAYS
ZONE (1008)
Z8-CHQ068

Project Code	Rubric	Initiator	Lot	Ref	Number	Revision
93M	047	6ACC	60DE	PDWG	08146	B

Tekla structures

Same comments as
93M-0476-ACC-60DEP-DWG-08079-B.

REVIEWED WITH COMMENT
MONORAILS PROJECT

MATERIAL LIST FOR ASSEMBLY MK'D **Z8-CHQ067**

Mark	Profile	GRADE	No.	Length	Area	Weight
Z8-CHQ067	CHQD5*1103.4	S235JR	1	3075	6.61	128.44
				Total	6.61	128.44

BOLT LIST:-

BOLT \ STUD	BOLT DESCRIPTION	QTY	FINISH
BOLT	B1N2W16 X 50 A325M	4	

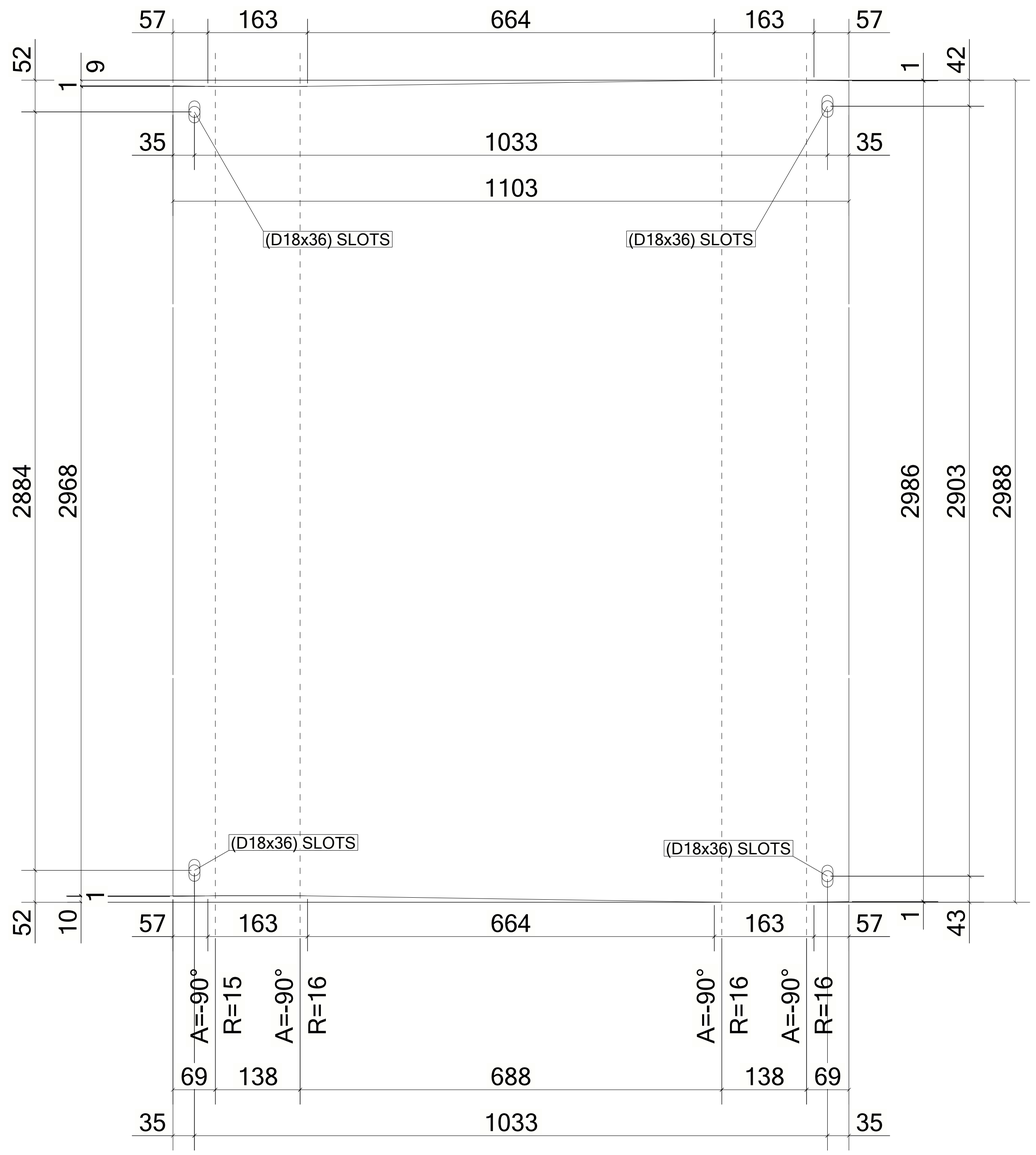

UNFOLDED VIEW

2 *REQUIRED AS DRAWN MARKED* **Z8-CHQ067**

6 October: Monorail
Engineering Unit
Valid For Construction

GENERAL NOTES:

1. THE DIMENSIONS SHOWN ARE NOMINAL (IN MILLIMETERS), U.N.O.
2. WELD SIZESHALL BE AISC MINIMUM OF 6 mm UNLESS NOTED OTHERWISE.
3. ALL FIELD WELDS SHALL BE INSPECTED PER QUALITY ASSURANCE AND SPECIAL INSPECTIONS.

REFERENCE DRAWINGS

1	93M-BOA-NAT-LOT-04833
2	93M-BOA-NAT-LOT-09170
3	93M-BOA-NAT-LOT-01976
4	93M-BOA-NAT-LOT-20021
5	
6	
7	
8	
9	

6TH OF OCTOBER CITY RAIL TRANSIT MONORAIL

The Authority | Consultant: Hill International | Main Contractor: ORASCOM CONSTRUCTION / BOMBARDIER | Structural Designer: INNOVA TRANSPORTATION

KEY PLAN:

SCALE	SHOPDRAWING	DATE
AS SHOWN		12/05/2023

REV	DATE	DSG.	CHK.	APP.	AMENDMENTS	STATUS
B	12/05/2023	M.KH	M.KH	DR.M.M	ISSUED FOR INFORMATION	IFI
A	11/20/2022	M.KH	M.KH	DR.M.M	ISSUED FOR INFORMATION	IFI

DRAWING TITLE
6TH OF OCTOBER MONORAIL
SERVICE WALKWAYS
ZONE (1008)
Z8-CHQ067

Project Code	Rubric	Initiator	Lot	Ref	Number	Revision
93	M047	6ACC	60DEP	DWG	08145	B

Tekla structures

Same comments as
93M-0476-ACC-60DEP-DWG-08079-B.

REVIEWED WITH COMMENT
MONORAILS PROJECT

MATERIAL LIST FOR ASSEMBLY MK'D **Z8-CHQ066**

Mark	Profile	GRADE	No.	Length	Area	Weight
Z8-CHQ066	CHQD5*1103.4	S235JR	1	3087	6.63	128.90
				Total	6.63	128.90

BOLT LIST:-

BOLT \ STUD	BOLT DESCRIPTION	QTY	FINISH
BOLT	B1N2W 16 X 50 A325M	4	

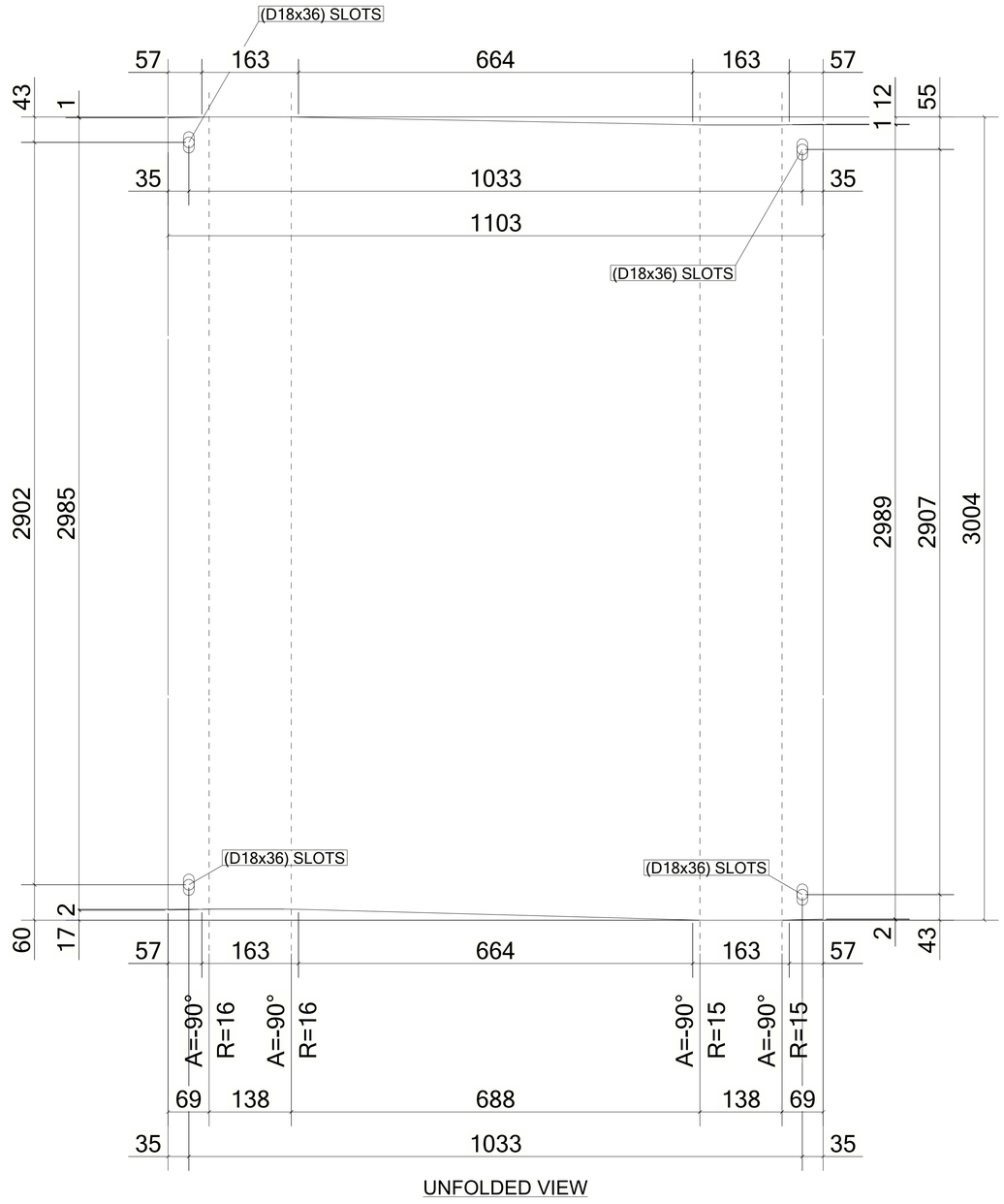

UNFOLDED VIEW

1 *REQUIRED AS DRAWN MARKED* **Z8-CHQ066**

6 October Monorail
Engineering Unit
Valid For Construction

GENERAL NOTES:

1. THE DIMENSIONS SHOWN ARE NOMINAL (IN MILLIMETERS), U.N.O.
2. WELD SIZESHALL BE AISC MINIMUM OF 6 mm UNLESS NOTED OTHERWISE.
3. ALL FIELD WELDS SHALL BE INSPECTED PER QUALITY ASSURANCE AND SPECIAL INSPECTIONS.

REFERENCE DRAWINGS

1	93M-BOA-NAT-LOT-04833
2	93M-BOA-NAT-LOT-09170
3	93M-BOA-NAT-LOT-01976
4	93M-BOA-NAT-LOT-20021
5	
6	
7	
8	
9	

6TH OF OCTOBER CITY RAIL TRANSIT MONORAIL

The Authority | Consultant: Hill International | Main Contractor: ORASCOM CONSTRUCTION, BOMBARDIER | Structural Designer: INNOVA TRANSPORTATION

KEY PLAN:

SCALE	SHOPDRAWING	DATE
AS SHOWN		12/05/2023

REV	DATE	DSG.	CHK.	APP.	AMENDMENTS	STATUS
B	12/05/2023	M.KH	M.KH	DR.M.M	ISSUED FOR INFORMATION	IFI
A	11/20/2022	M.KH	M.KH	DR.M.M	ISSUED FOR INFORMATION	IFI

DRAWING TITLE
6TH OF OCTOBER MONORAIL
SERVICE WALKWAYS
ZONE (1008)
Z8-CHQ066

Project Code	Rubric	Initiator	Lot	Ref	Number	Revision
93M	047	ACC	60	DEP	DWG0814	B

Tekla structures

Same comments as
93M-0476-ACC-60DEP-DWG-08079-B.

REVIEWED WITH COMMENT
MONORAILS PROJECT

MATERIAL LIST FOR ASSEMBLY MK'D **Z8-CHQ065**

Mark	Profile	GRADE	No.	Length	Area	Weight
Z8-CHQ065	CHQD5*1103.4	S235JR	1	3092	6.64	129.09
				Total	6.64	129.09

BOLT LIST:-

BOLT \ STUD	BOLT DESCRIPTION		QTY	FINISH
BOLT	B1N2W16 X 50	A325M	4	

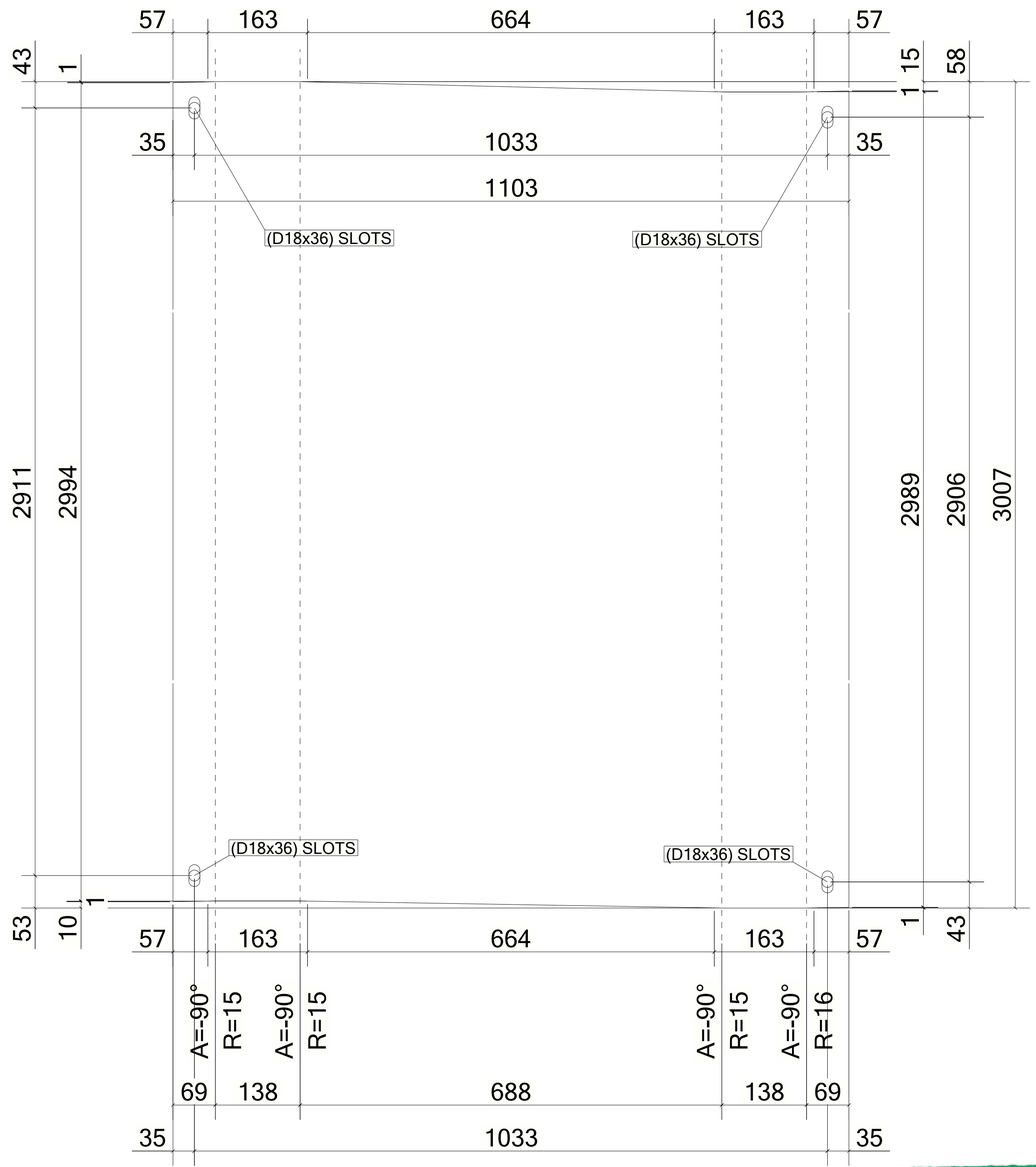

UNFOLDED VIEW

1 *REQUIRED AS DRAWN MARKED* **Z8-CHQ065**

6 October Monorail
Engineering Unit
Valid For Construction

GENERAL NOTES:

1. THE DIMENSIONS SHOWN ARE NOMINAL (IN MILLIMETERS), U.N.O.
2. WELD SIZESHALL BE AISC MINIMUM OF 6 mm UNLESS NOTED OTHERWISE.
3. ALL FIELD WELDS SHALL BE INSPECTED PER QUALITY ASSURANCE AND SPECIAL INSPECTIONS.

REFERENCE DRAWINGS

1	93M-BOA-NAT-LOT-04833
2	93M-BOA-NAT-LOT-09170
3	93M-BOA-NAT-LOT-01976
4	93M-BOA-NAT-LOT-20021
5	
6	
7	
8	
9	

6TH OF OCTOBER CITY RAIL TRANSIT MONORAIL

The Authority — Hill International Consultant — Main Contractor — Structural Designer

KEY PLAN:

SCALE	SHOPDRAWING	DATE
AS SHOWN		12/05/2023

REV	DATE	DSG.	CHK.	APP.	AMENDMENTS	STATUS
B	12/05/2023	M.KH	M.KH	DR.M.M	ISSUED FOR INFORMATION	IFI
A	11/20/2022	M.KH	M.KH	DR.M.M	ISSUED FOR INFORMATION	IFI

DRAWING TITLE
6TH OF OCTOBER MONORAIL
SERVICE WALKWAYS
ZONE (1008)
Z8-CHQ065

Project Code	Rubric	Initiator	Lot	Ref	Number	Revision
93M	047	6ACC	60DE	PDWG	08143	B

Tekla structures

Same comments as
93M-0476-ACC-60DEP-DWG-08079-B.

REVIEWED WITH COMMENT
MONORAILS PROJECT

MATERIAL LIST FOR ASSEMBLY MK'D **Z8-CHQ064**

Mark	Profile	GRADE	No.	Length	Area	Weight
Z8-CHQ064	CHQD5*1103.4	S235JR	1	3089	6.63	128.93
				Total	6.63	128.93

BOLT LIST:-

BOLT \ STUD	BOLT DESCRIPTION	QTY	FINISH
BOLT	B1N2W16 X 50 A325M	4	

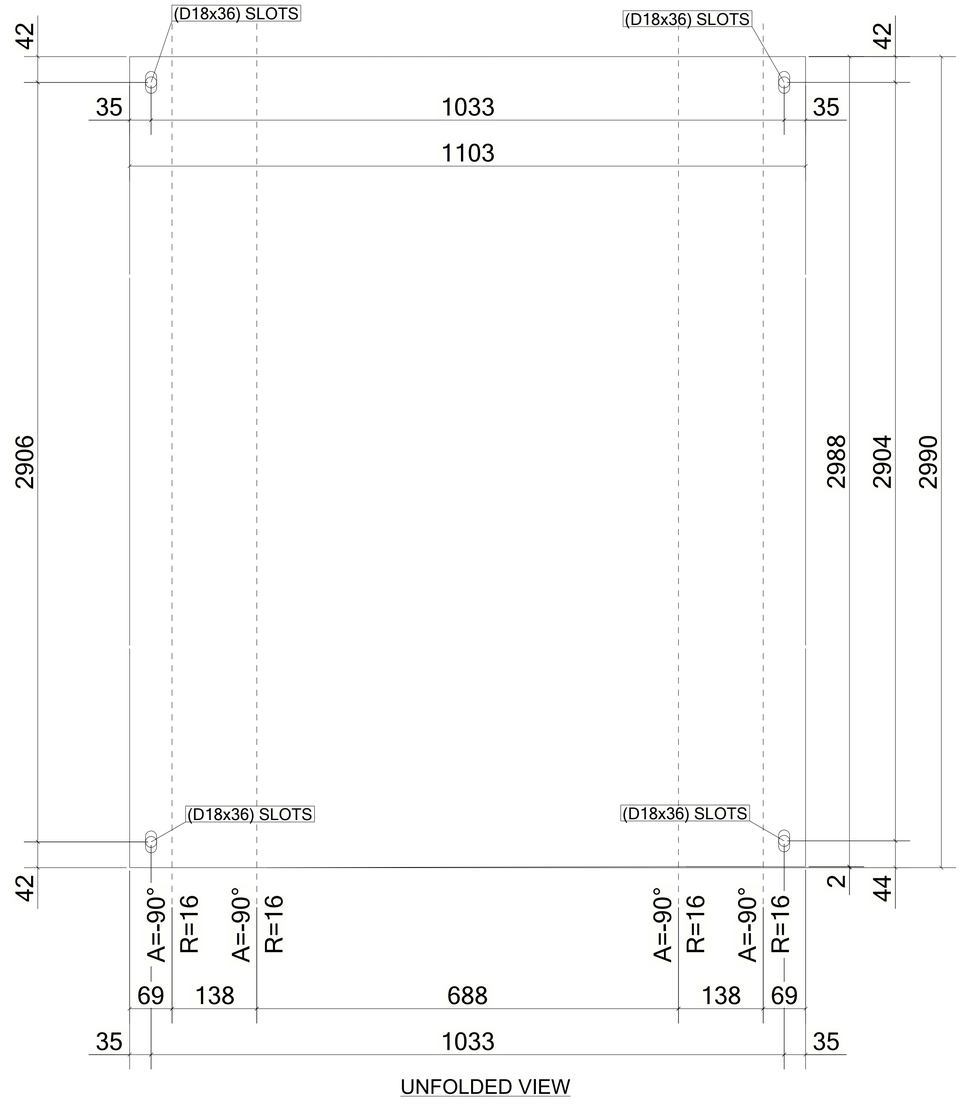

UNFOLDED VIEW

1 *REQUIRED AS DRAWN MARKED* **Z8-CHQ064**

6 October Monorail
Engineering Unit
Valid For Construction

GENERAL NOTES:

1. THE DIMENSIONS SHOWN ARE NOMINAL (IN MILLIMETERS), U.N.O.
2. WELD SIZESHALL BE AISC MINIMUM OF 6 mm UNLESS NOTED OTHERWISE.
3. ALL FIELD WELDS SHALL BE INSPECTED PER QUALITY ASSURANCE AND SPECIAL INSPECTIONS.

REFERENCE DRAWINGS

1	93M-BOA-NAT-LOT-04833
2	93M-BOA-NAT-LOT-09170
3	93M-BOA-NAT-LOT-01976
4	93M-BOA-NAT-LOT-20021
5	
6	
7	
8	
9	

6TH OF OCTOBER CITY RAIL TRANSIT MONORAIL

The Authority | Consultant: Hill International | Main Contractor: ORASCOM CONSTRUCTION, The Arab Contractors, BOMBARDIER | Structural Designer: INNOVA TRANSPORTATION

KEY PLAN:

SCALE	SHOPDRAWING	DATE
AS SHOWN		12/05/2023

REV	DATE	DSG.	CHK.	APP.	AMENDMENTS	STATUS
B	12/05/2023	M.KH	M.KH	DR.M.M	ISSUED FOR INFORMATION	IFI
A	11/20/2022	M.KH	M.KH	DR.M.M	ISSUED FOR INFORMATION	IFI

DRAWING TITLE
6TH OF OCTOBER MONORAIL
SERVICE WALKWAYS
ZONE (1008)
Z8-CHQ064

Project Code	Rubric	Initiator	Lot	Ref	Number	Revision
93M	0476	ACC	60	DEP	DWG0814	B

Tekla structures

Same comments as
93M-0476-ACC-60DEP-DWG-08079-B.

REVIEWED WITH COMMENT
MONORAILS PROJECT

MATERIAL LIST FOR ASSEMBLY MK'D **Z8-CHQ063**

Mark	Profile	GRADE	No.	Length	Area	Weight
Z8-CHQ063	CHQD5*1103.4	S235JR	1	3091	6.63	129.01
				Total	6.63	129.01

BOLT LIST:-

BOLT \ STUD	BOLT DESCRIPTION	QTY	FINISH
BOLT	B1N2W16 X 50 A325M	4	

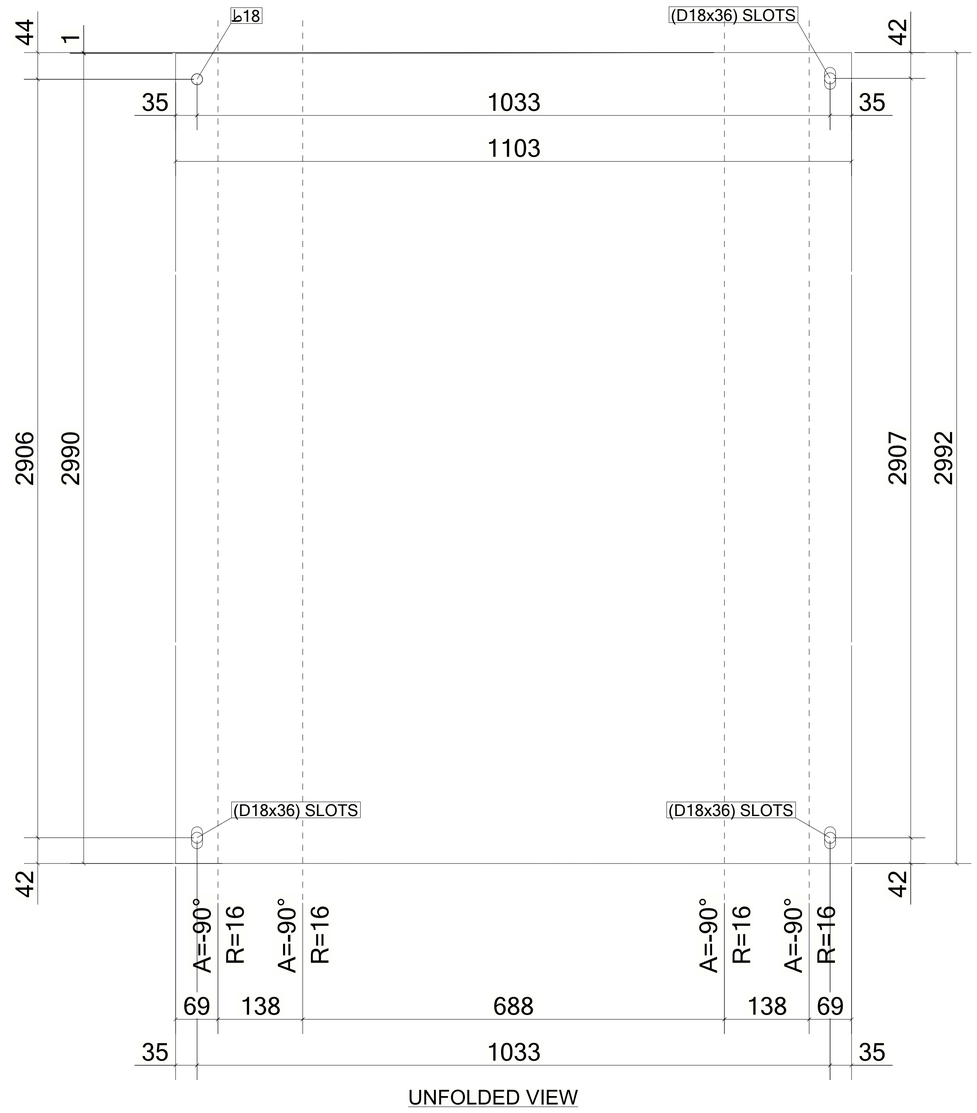

UNFOLDED VIEW

1 *REQUIRED AS DRAWN MARKED* **Z8-CHQ063**

6 October Monorail
Engineering Unit
Valid For Construction

GENERAL NOTES:

1. THE DIMENSIONS SHOWN ARE NOMINAL (IN MILLIMETERS), U.N.O.
2. WELD SIZESHALL BE AISC MINIMUM OF 6 mm UNLESS NOTED OTHERWISE.
3. ALL FIELD WELDS SHALL BE INSPECTED PER QUALITY ASSURANCE AND SPECIAL INSPECTIONS.

REFERENCE DRAWINGS

1	93M-BOA-NAT-LOT-04833
2	93M-BOA-NAT-LOT-09170
3	93M-BOA-NAT-LOT-01976
4	93M-BOA-NAT-LOT-20021
5	
6	
7	
8	
9	

6TH OF OCTOBER CITY RAIL TRANSIT MONORAIL

The Authority | Consultant: Hill International | Main Contractor: ORASCOM CONSTRUCTION, BOMBARDIER | Structural Designer: INNOVA TRANSPORTATION

KEY PLAN:

SCALE	SHOPDRAWING	DATE
AS SHOWN		12/05/2023

REV	DATE	DSG.	CHK.	APP.	AMENDMENTS	STATUS
B	12/05/2023	M.KH	M.KH	DR.M.M	ISSUED FOR INFORMATION	IFI
A	11/20/2022	M.KH	M.KH	DR.M.M	ISSUED FOR INFORMATION	IFI

DRAWING TITLE
6TH OF OCTOBER MONORAIL
SERVICE WALKWAYS
ZONE (1008)
Z8-CHQ063

Project Code	Rubric	Initiator	Lot	Ref	Number	Revision
93M	047	6ACC	60DEP	DWG	08141	B

Tekla structures

Same comments as
93M-0476-ACC-60DEP-DWG-08079-B.

REVIEWED WITH COMMENT
MONORAILS PROJECT

MATERIAL LIST FOR ASSEMBLY MK'D **Z8-CHQ062**

Mark	Profile	GRADE	No.	Length	Area	Weight
Z8-CHQ062	CHQD5*1103.4	S235JR	1	3090	6.63	128.96
				Total	6.63	128.96

BOLT LIST:-

BOLT \ STUD	BOLT DESCRIPTION		QTY	FINISH
BOLT	B1N2W16 X 50	A325M	4	

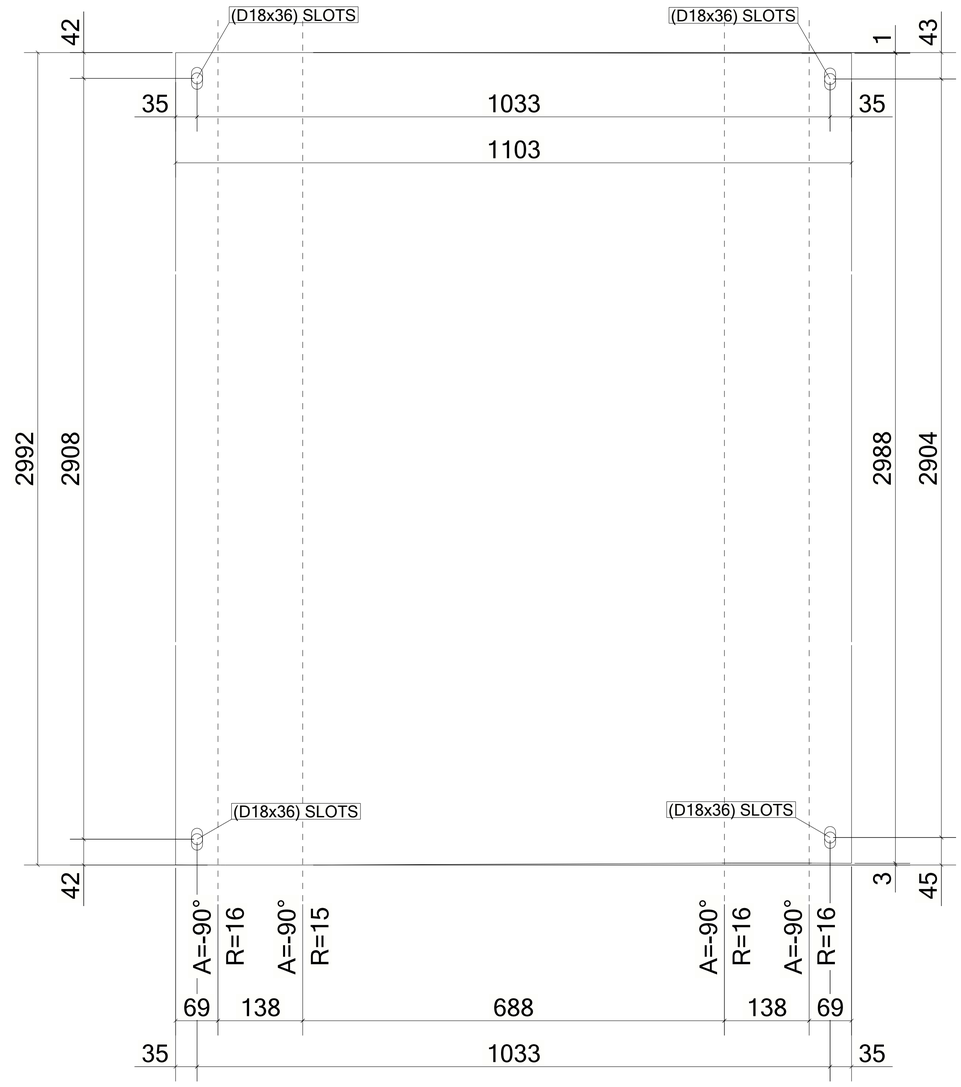

UNFOLDED VIEW

1 *REQUIRED AS DRAWN MARKED* **Z8-CHQ062**

6 October Monorail
Engineering Unit
Valid For Construction

GENERAL NOTES:

1. THE DIMENSIONS SHOWN ARE NOMINAL (IN MILLIMETERS), U.N.O.
2. WELD SIZESHALL BE AISC MINIMUM OF 6 mm UNLESS NOTED OTHERWISE.
3. ALL FIELD WELDS SHALL BE INSPECTED PER QUALITY ASSURANCE AND SPECIAL INSPECTIONS.

REFERENCE DRAWINGS

1	93M-BOA-NAT-LOT-04833
2	93M-BOA-NAT-LOT-09170
3	93M-BOA-NAT-LOT-01976
4	93M-BOA-NAT-LOT-20021
5	
6	
7	
8	
9	

6TH OF OCTOBER CITY RAIL TRANSIT MONORAIL

The Authority | Consultant: Hill International | Main Contractor: ORASCOM CONSTRUCTION / BOMBARDIER | Structural Designer: INNOVA TRANSPORTATION

KEY PLAN:

SCALE	SHOPDRAWING	DATE
AS SHOWN		12/05/2023

REV	DATE	DSG.	CHK.	APP.	AMENDMENTS	STATUS
B	12/05/2023	M.KH	M.KH	DR.M.M	ISSUED FOR INFORMATION	IFI
A	11/20/2022	M.KH	M.KH	DR.M.M	ISSUED FOR INFORMATION	IFI

DRAWING TITLE
6TH OF OCTOBER MONORAIL
SERVICE WALKWAYS
ZONE (1008)
Z8-CHQ062

Project Code	Rubric	Initiator	Lot	Ref	Number	Revision
93M	047	6ACC	60DEP	DWG	08140	B

Tekla structures

Same comments as 93M-0476-ACC-60DEP-DWG-08079-B.

REVIEWED WITH COMMENT
MONORAILS PROJECT

MATERIAL LIST FOR ASSEMBLY MK'D **Z8-CHQ061**

Mark	Profile	GRADE	No.	Length	Area	Weight
Z8-CHQ061	CHQD5*1103.4	S235JR	1	3086	6.63	128.84
				Total	6.63	128.84

BOLT LIST:-

BOLT \ STUD	BOLT DESCRIPTION	QTY	FINISH
BOLT	B1N2W16 X 50 A325M	4	

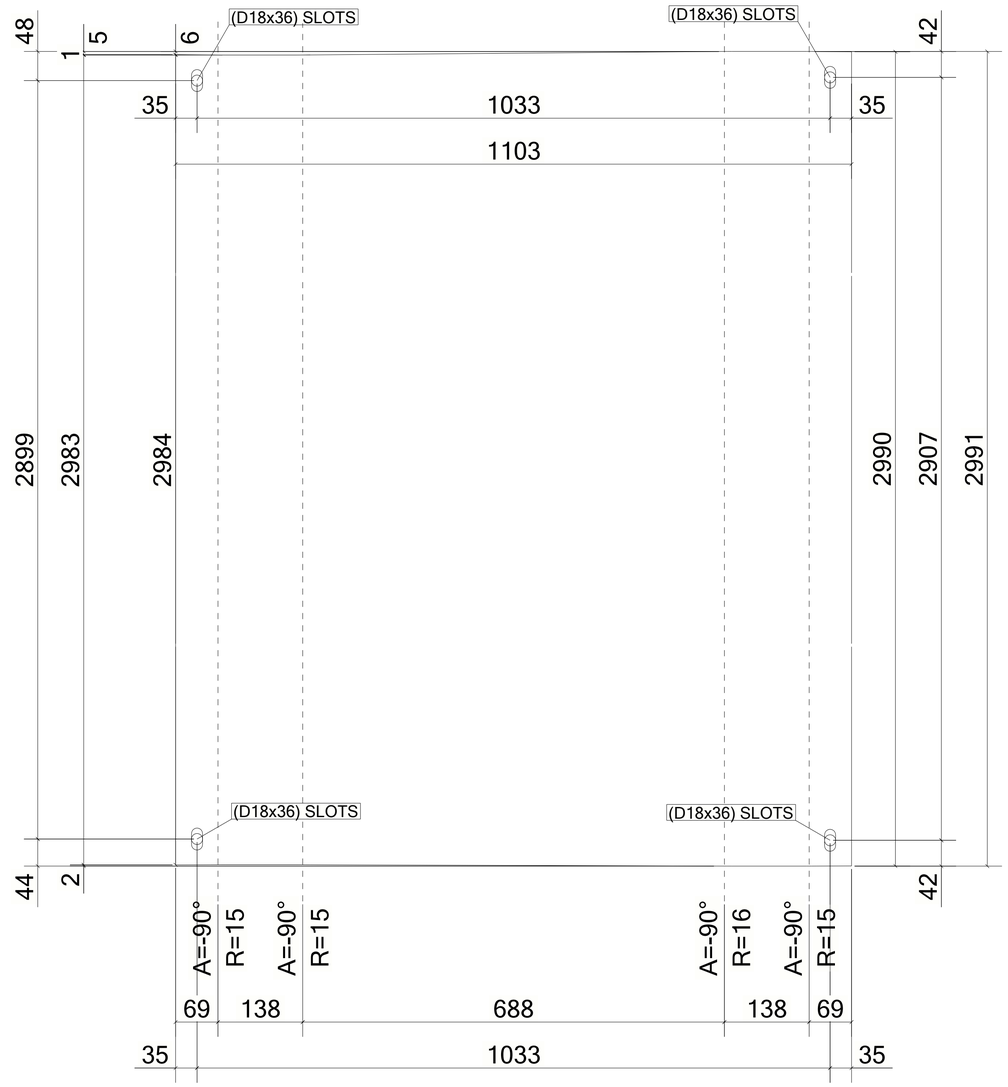

UNFOLDED VIEW

1 *REQUIRED AS DRAWN MARKED* **Z8-CHQ061**

6 October Monorail
Engineering Unit
Valid For Construction

GENERAL NOTES:

1. THE DIMENSIONS SHOWN ARE NOMINAL (IN MILLIMETERS), U.N.O.
2. WELD SIZESHALL BE AISC MINIMUM OF 6 mm UNLESS NOTED OTHERWISE.
3. ALL FIELD WELDS SHALL BE INSPECTED PER QUALITY ASSURANCE AND SPECIAL INSPECTIONS.

REFERENCE DRAWINGS

1	93M-BOA-NAT-LOT-04833
2	93M-BOA-NAT-LOT-09170
3	93M-BOA-NAT-LOT-01976
4	93M-BOA-NAT-LOT-20021
5	
6	
7	
8	
9	

6TH OF OCTOBER CITY RAIL TRANSIT MONORAIL

The Authority — Consultant — Main Contractor — Structural Designer

KEY PLAN:

SCALE	SHOPDRAWING	DATE
AS SHOWN		12/05/2023

REV	DATE	DSG.	CHK.	APP.	AMENDMENTS	STATUS
B	12/05/2023	M.KH	M.KH	DR.M.M	ISSUED FOR INFORMATION	IFI
A	11/20/2022	M.KH	M.KH	DR.M.M	ISSUED FOR INFORMATION	IFI

DRAWING TITLE
6TH OF OCTOBER MONORAIL
SERVICE WALKWAYS
ZONE (1008)
Z8-CHQ061

Project Code	Rubric	Initiator	Lot	Ref	Number	Revision
93M	047	6ACC	60DEP	DWG	08139	B

Tekla structures

Same comments as
93M-0476-ACC-60DEP-DWG-08079-B.

REVIEWED WITH COMMENT
MONORAILS PROJECT

MATERIAL LIST FOR ASSEMBLY MK'D **Z8-CHQ060**

Mark	Profile	GRADE	No.	Length	Area	Weight
Z8-CHQ060	CHQD5*1103.4	S235JR	1	1595	3.32	64.47
				Total	3.32	64.47

BOLT LIST:-

BOLT \ STUD	BOLT DESCRIPTION	QTY	FINISH
BOLT	B1N2W16 X 50 A325M	4	

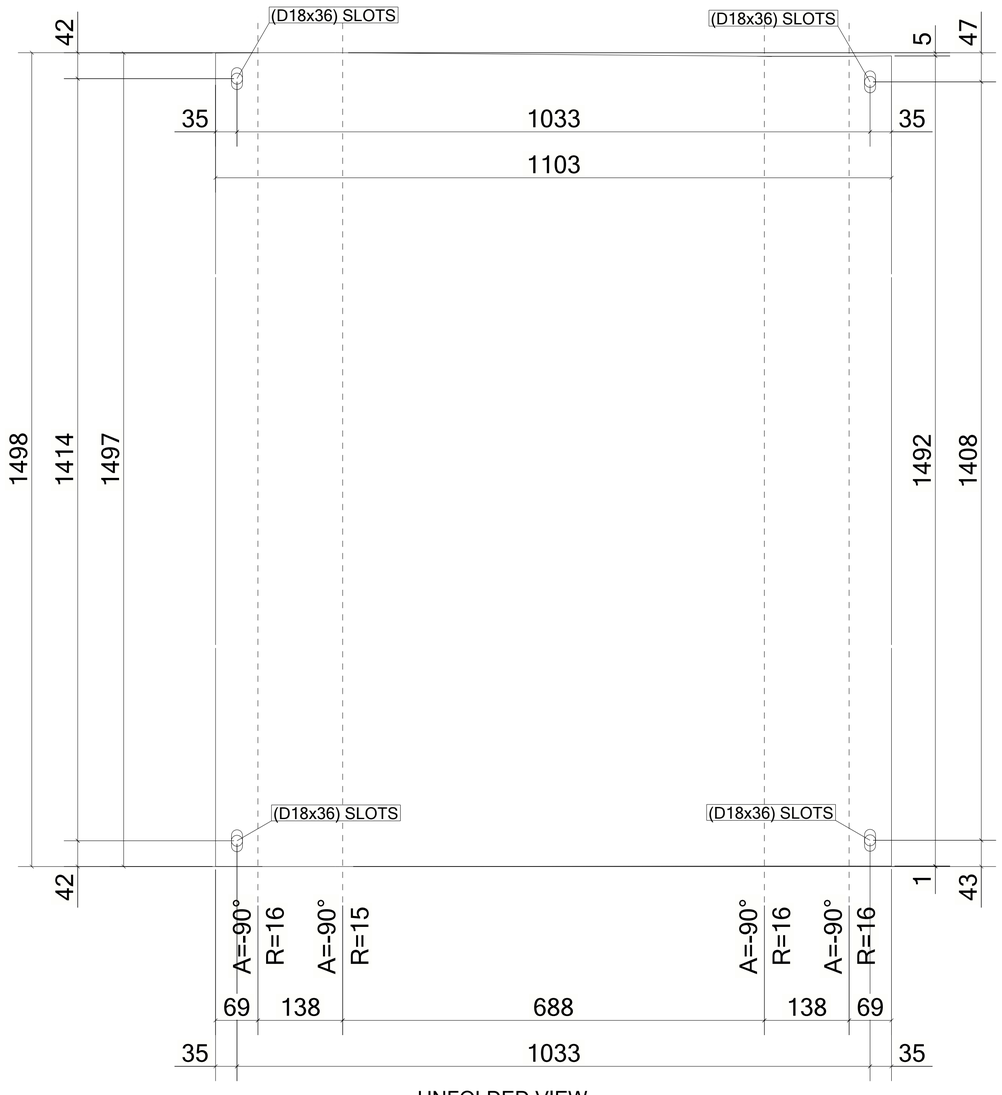

UNFOLDED VIEW

1 *REQUIRED AS DRAWN MARKED* **Z8-CHQ060**

6 October Monorail
Engineering Unit
Valid For Construction

GENERAL NOTES:

1. THE DIMENSIONS SHOWN ARE NOMINAL (IN MILLIMETERS), U.N.O.
2. WELD SIZESHALL BE AISC MINIMUM OF 6 mm UNLESS NOTED OTHERWISE.
3. ALL FIELD WELDS SHALL BE INSPECTED PER QUALITY ASSURANCE AND SPECIAL INSPECTIONS.

REFERENCE DRAWINGS

1	93M-BOA-NAT-LOT-04833
2	93M-BOA-NAT-LOT-09170
3	93M-BOA-NAT-LOT-01976
4	93M-BOA-NAT-LOT-20021
5	
6	
7	
8	
9	

6TH OF OCTOBER CITY RAIL TRANSIT MONORAIL

The Authority | Hill International Consultant | Main Contractor | Structural Designer

KEY PLAN:

SCALE: AS SHOWN | SHOPDRAWING | DATE: 12/05/2023

REV	DATE	DSG.	CHK.	APP.	AMENDMENTS	STATUS
B	12/05/2023	M.KH	M.KH	DR.M.M	ISSUED FOR INFORMATION	IFI
A	11/20/2022	M.KH	M.KH	DR.M.M	ISSUED FOR INFORMATION	IFI

DRAWING TITLE
6TH OF OCTOBER MONORAIL
SERVICE WALKWAYS
ZONE (1008)
Z8-CHQ060

Project Code	Rubric	Initiator	Lot	Ref	Number	Revision
93M	047	6ACC	60DEP	DWG	08138	B

Tekla structures

Same comments as
93M-0476-ACC-60DEP-DWG-08079-B.

REVIEWED WITH COMMENT
MONORAILS PROJECT

MATERIAL LIST FOR ASSEMBLY MK'D **Z8-CHQ059**

Mark	Profile	GRADE	No.	Length	Area	Weight
Z8-CHQ059	CHQD5*1103.4	S235JR	1	3088	6.63	128.89
				Total	6.63	128.89

BOLT LIST:-

BOLT \ STUD	BOLT DESCRIPTION	QTY	FINISH
BOLT	B1N2W16 X 50 A325M	4	

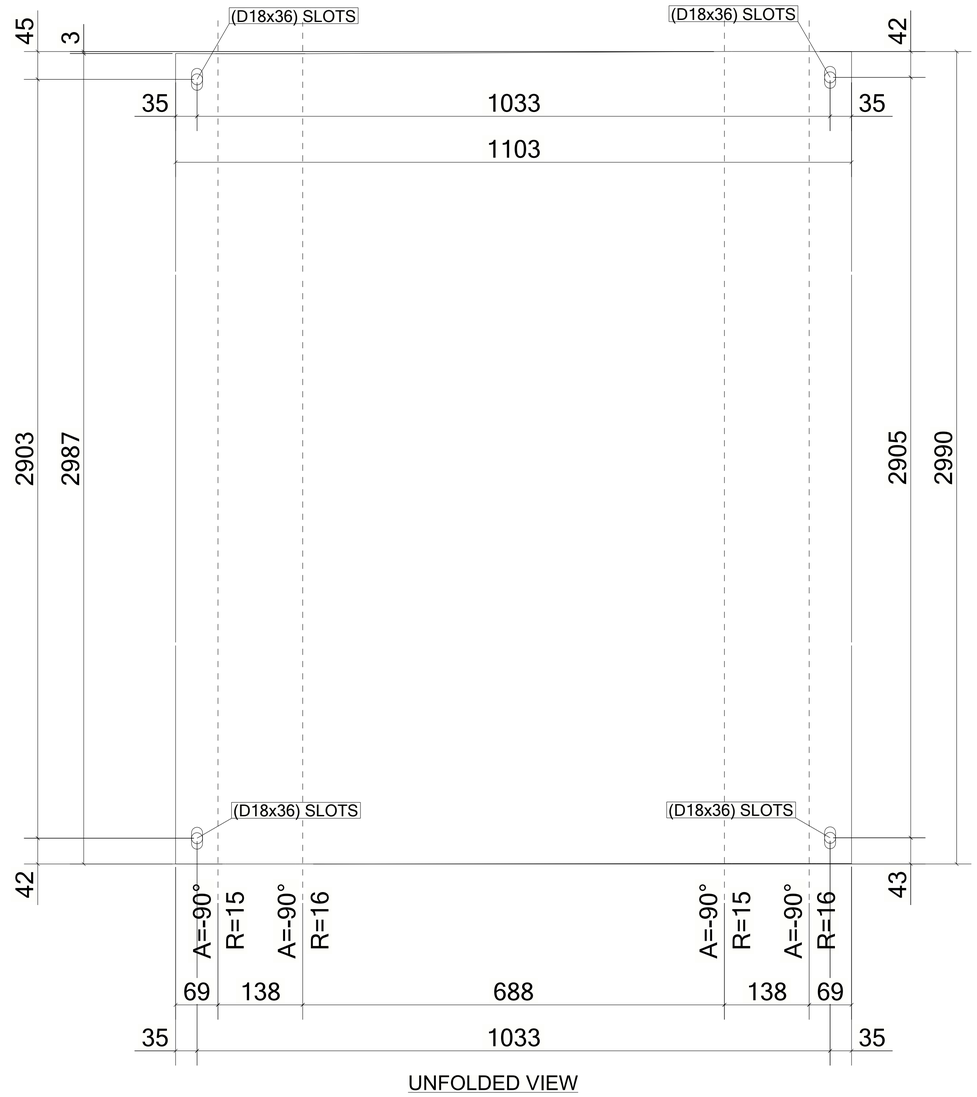

UNFOLDED VIEW

1 *REQUIRED AS DRAWN MARKED* **Z8-CHQ059**

6 October: Monorail
Engineering Unit
Valid For Construction

GENERAL NOTES:

1. THE DIMENSIONS SHOWN ARE NOMINAL (IN MILLIMETERS), U.N.O.
2. WELD SIZESHALL BE AISC MINIMUM OF 6 mm UNLESS NOTED OTHERWISE.
3. ALL FIELD WELDS SHALL BE INSPECTED PER QUALITY ASSURANCE AND SPECIAL INSPECTIONS.

REFERENCE DRAWINGS

1	93M-BOA-NAT-LOT-04833
2	93M-BOA-NAT-LOT-09170
3	93M-BOA-NAT-LOT-01976
4	93M-BOA-NAT-LOT-20021
5	
6	
7	
8	
9	

6TH OF OCTOBER CITY RAIL TRANSIT MONORAIL

The Authority — Hill International Consultant — Main Contractor — Structural Designer

KEY PLAN:

SCALE	SHOPDRAWING	DATE
AS SHOWN		12/05/2023

REV	DATE	DSG.	CHK.	APP.	AMENDMENTS	STATUS
B	12/05/2023	M.KH	M.KH	DR.M.M	ISSUED FOR INFORMATION	IFI
A	11/20/2022	M.KH	M.KH	DR.M.M	ISSUED FOR INFORMATION	IFI

DRAWING TITLE
6TH OF OCTOBER MONORAIL
SERVICE WALKWAYS
ZONE (1008)
Z8-CHQ059

Project Code	Rubric	Initiator	Lot	Ref	Number	Revision
93	M047	6ACC	60DE	PDWG	08137	B

Tekla structures

Same comments as
93M-0476-ACC-60DEP-DWG-08079-B.

REVIEWED WITH COMMENT
MONORAILS PROJECT

MATERIAL LIST FOR ASSEMBLY MK'D **Z8-CHQ058**

Mark	Profile	GRADE	No.	Length	Area	Weight
Z8-CHQ058	CHQD5*1103.4	S235JR	1	1594	3.32	64.41
				Total	3.32	64.41

BOLT LIST:-

BOLT \ STUD	BOLT DESCRIPTION	QTY	FINISH
BOLT	B1N2W16 X 50 A325M	4	

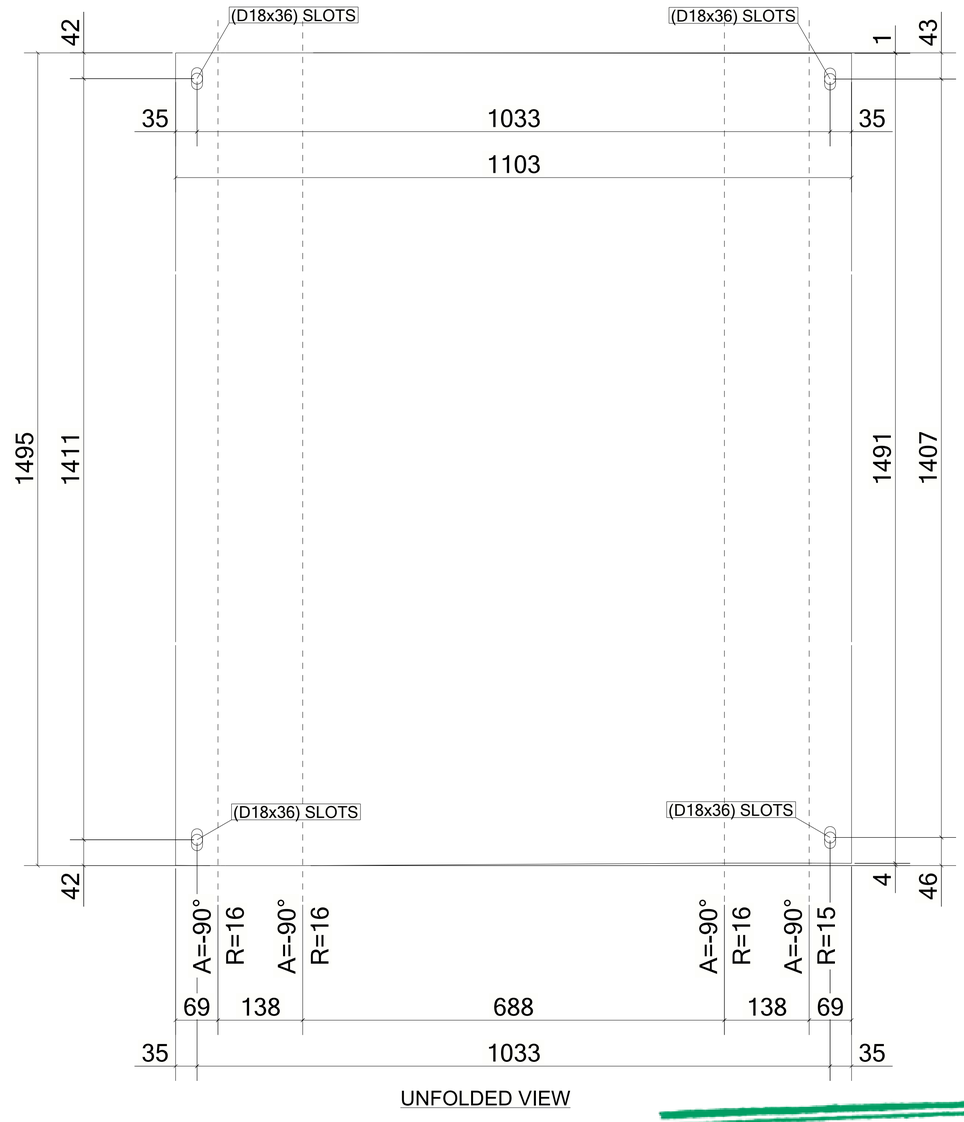

UNFOLDED VIEW

1 *REQUIRED AS DRAWN MARKED* **Z8-CHQ058**

6 October Monorail
Engineering Unit
Valid For Construction

GENERAL NOTES:

1. THE DIMENSIONS SHOWN ARE NOMINAL (IN MILLIMETERS), U.N.O.
2. WELD SIZESHALL BE AISC MINIMUM OF 6 mm UNLESS NOTED OTHERWISE.
3. ALL FIELD WELDS SHALL BE INSPECTED PER QUALITY ASSURANCE AND SPECIAL INSPECTIONS.

REFERENCE DRAWINGS

1	93M-BOA-NAT-LOT-04833
2	93M-BOA-NAT-LOT-09170
3	93M-BOA-NAT-LOT-01976
4	93M-BOA-NAT-LOT-20021
5	
6	
7	
8	
9	

6TH OF OCTOBER CITY RAIL TRANSIT MONORAIL

The Authority | Consultant: Hill International | Main Contractor: ORASCOM CONSTRUCTION, BOMBARDIER | Structural Designer: INNOVA TRANSPORTATION

KEY PLAN:

SCALE	SHOPDRAWING	DATE
AS SHOWN		12/05/2023

REV	DATE	DSG.	CHK.	APP.	AMENDMENTS	STATUS
B	12/05/2023	M.KH	M.KH	DR.M.M	ISSUED FOR INFORMATION	IFI
A	11/20/2022	M.KH	M.KH	DR.M.M	ISSUED FOR INFORMATION	IFI

DRAWING TITLE
6TH OF OCTOBER MONORAIL
SERVICE WALKWAYS
ZONE (1008)
Z8-CHQ058

Project Code	Rubric	Initiator	Lot	Ref	Number	Revision
93M	0476	ACC	60DEP	DWG	08136	B

Tekla structures

Same comments as
93M-0476-ACC-60DEP-DWG-08079-B.

REVIEWED WITH COMMENT
MONORAILS PROJECT

MATERIAL LIST FOR ASSEMBLY MK'D **Z8-CHQ057**

Mark	Profile	GRADE	No.	Length	Area	Weight
Z8-CHQ057	CHQD5*1103.4	S235JR	1	3091	6.64	129.05
				Total	6.64	129.05

BOLT LIST:-

BOLT \ STUD	BOLT DESCRIPTION	QTY	FINISH
BOLT	B1N2W16 X 50 A325M	4	

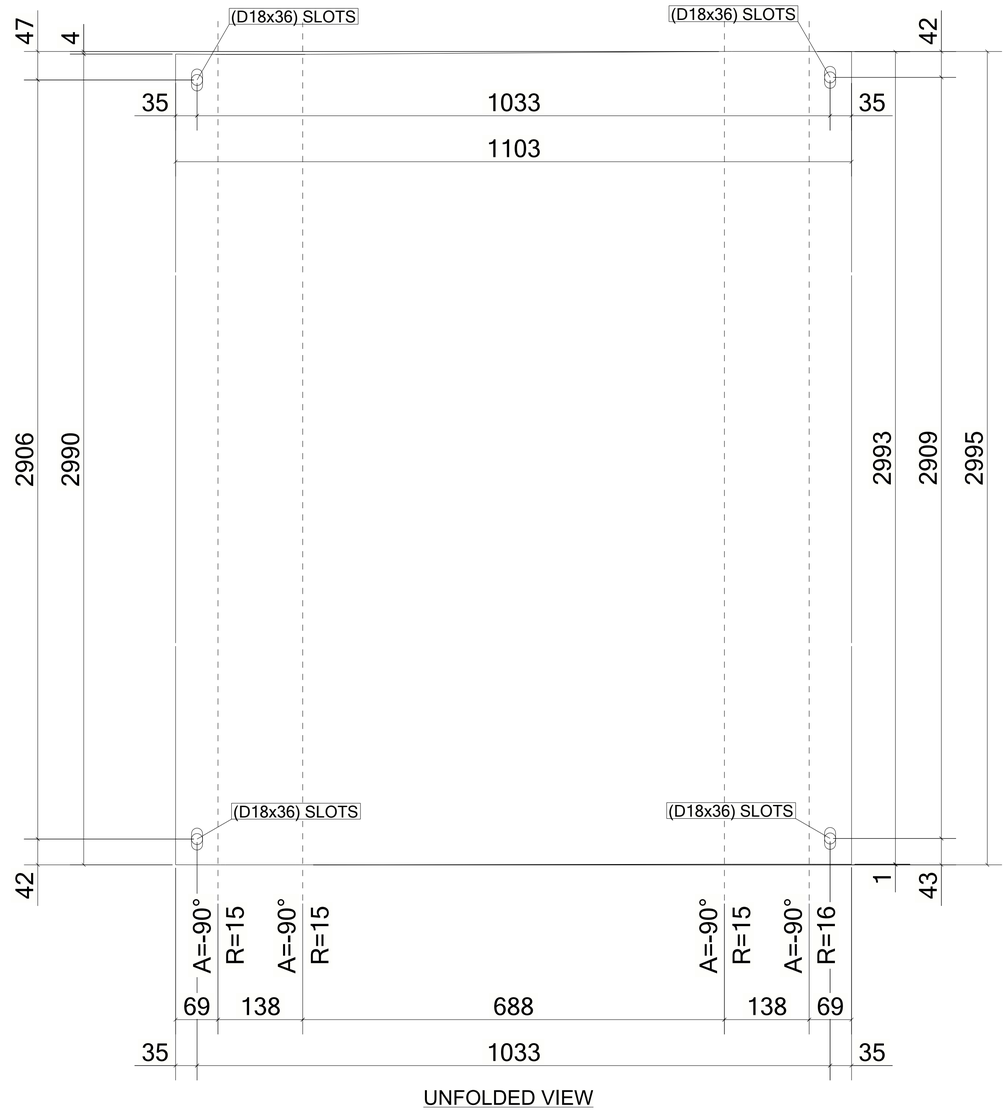

UNFOLDED VIEW

1 *REQUIRED AS DRAWN MARKED* **Z8-CHQ057**

6 October Monorail
Engineering Unit
Valid For Construction

GENERAL NOTES:

1. THE DIMENSIONS SHOWN ARE NOMINAL (IN MILLIMETERS), U.N.O.
2. WELD SIZESHALL BE AISC MINIMUM OF 6 mm UNLESS NOTED OTHERWISE.
3. ALL FIELD WELDS SHALL BE INSPECTED PER QUALITY ASSURANCE AND SPECIAL INSPECTIONS.

REFERENCE DRAWINGS

1	93M-BOA-NAT-LOT-04833
2	93M-BOA-NAT-LOT-09170
3	93M-BOA-NAT-LOT-01976
4	93M-BOA-NAT-LOT-20021
5	
6	
7	
8	
9	

6TH OF OCTOBER CITY RAIL TRANSIT MONORAIL

The Authority — Hill International Consultant — Main Contractor — Structural Designer

KEY PLAN:

SCALE	SHOPDRAWING	DATE
AS SHOWN		12/05/2023

REV	DATE	DSG.	CHK.	APP.	AMENDMENTS	STATUS
B	12/05/2023	M.KH	M.KH	DR.M.M	ISSUED FOR INFORMATION	IFI
A	11/20/2022	M.KH	M.KH	DR.M.M	ISSUED FOR INFORMATION	IFI

DRAWING TITLE
6TH OF OCTOBER MONORAIL
SERVICE WALKWAYS
ZONE (1008)
Z8-CHQ057

Project Code	Rubric	Initiator	Lot	Ref	Number	Revision
93	M047	6ACC	60DE	PDWG	0813	5 B

Tekla structures

Same comments as
93M-0476-ACC-60DEP-DWG-08079-B.

REVIEWED WITH COMMENT
MONORAILS PROJECT

MATERIAL LIST FOR ASSEMBLY MK'D **Z8-CHQ056**						
Mark	Profile	GRADE	No.	Length	Area	Weight
Z8-CHQ056	CHQD5*1103.4	S235JR	1	1585	3.30	64.06
				Total	3.30	64.06

BOLT LIST:-

BOLT \ STUD	BOLT DESCRIPTION	QTY	FINISH
BOLT	B1N2W16 X 50 A325M	4	

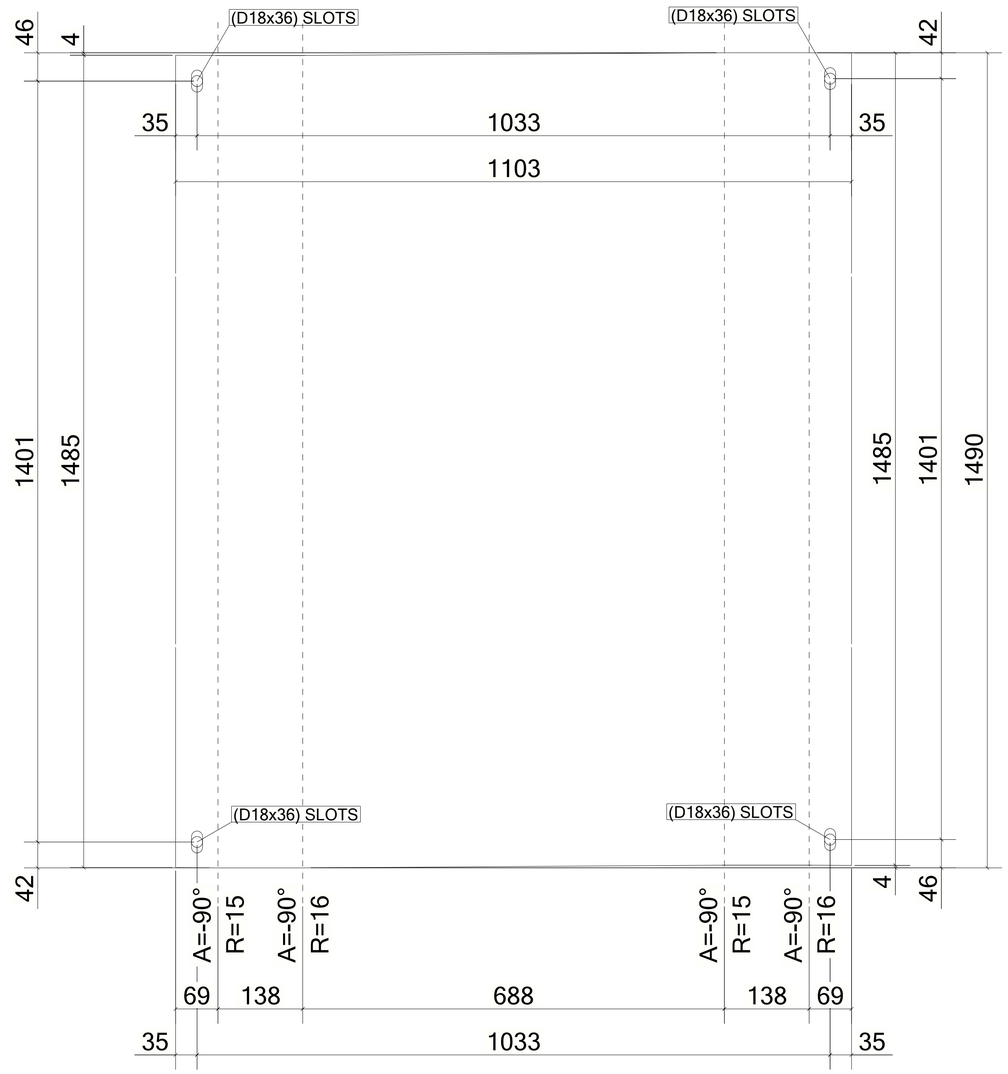

UNFOLDED VIEW

1 *REQUIRED AS DRAWN MARKED* **Z8-CHQ056**

6 October Monorail
Engineering Unit
Valid For Construction

GENERAL NOTES:

1. THE DIMENSIONS SHOWN ARE NOMINAL (IN MILLIMETERS), U.N.O.
2. WELD SIZESHALL BE AISC MINIMUM OF 6 mm UNLESS NOTED OTHERWISE.
3. ALL FIELD WELDS SHALL BE INSPECTED PER QUALITY ASSURANCE AND SPECIAL INSPECTIONS.

REFERENCE DRAWINGS

1	93M-BOA-NAT-LOT-04833
2	93M-BOA-NAT-LOT-09170
3	93M-BOA-NAT-LOT-01976
4	93M-BOA-NAT-LOT-20021
5	
6	
7	
8	
9	

6TH OF OCTOBER CITY RAIL TRANSIT MONORAIL

The Authority | Consultant: Hill International | Main Contractor: ORASCOM CONSTRUCTION, BOMBARDIER | Structural Designer: INNOVA TRANSPORTATION

KEY PLAN:

SCALE: AS SHOWN | SHOPDRAWING | DATE: 12/05/2023

REV	DATE	DSG.	CHK.	APP.	AMENDMENTS	STATUS
B	12/05/2023	M.KH	M.KH	DR.M.M	ISSUED FOR INFORMATION	IFI
A	11/20/2022	M.KH	M.KH	DR.M.M	ISSUED FOR INFORMATION	IFI

DRAWING TITLE
6TH OF OCTOBER MONORAIL
SERVICE WALKWAYS
ZONE (1008)
Z8-CHQ056

Project Code	Rubric	Initiator	Lot	Ref	Number	Revision
93M	0476	ACC	60DEP	DWG	08134	B

Tekla structures

Same comments as 93M-0476-ACC-60DEP-DWG-08079-B.

REVIEWED WITH COMMENT
MONORAILS PROJECT

MATERIAL LIST FOR ASSEMBLY MK'D **Z8-CHQ055**

Mark	Profile	GRADE	No.	Length	Area	Weight
Z8-CHQ055	CHQD5*1103.4	S235JR	1	3091	6.64	129.03
				Total	6.64	129.03

BOLT LIST:-

BOLT \ STUD	BOLT DESCRIPTION		QTY	FINISH
BOLT	B1N2W16 X 50	A325M	4	

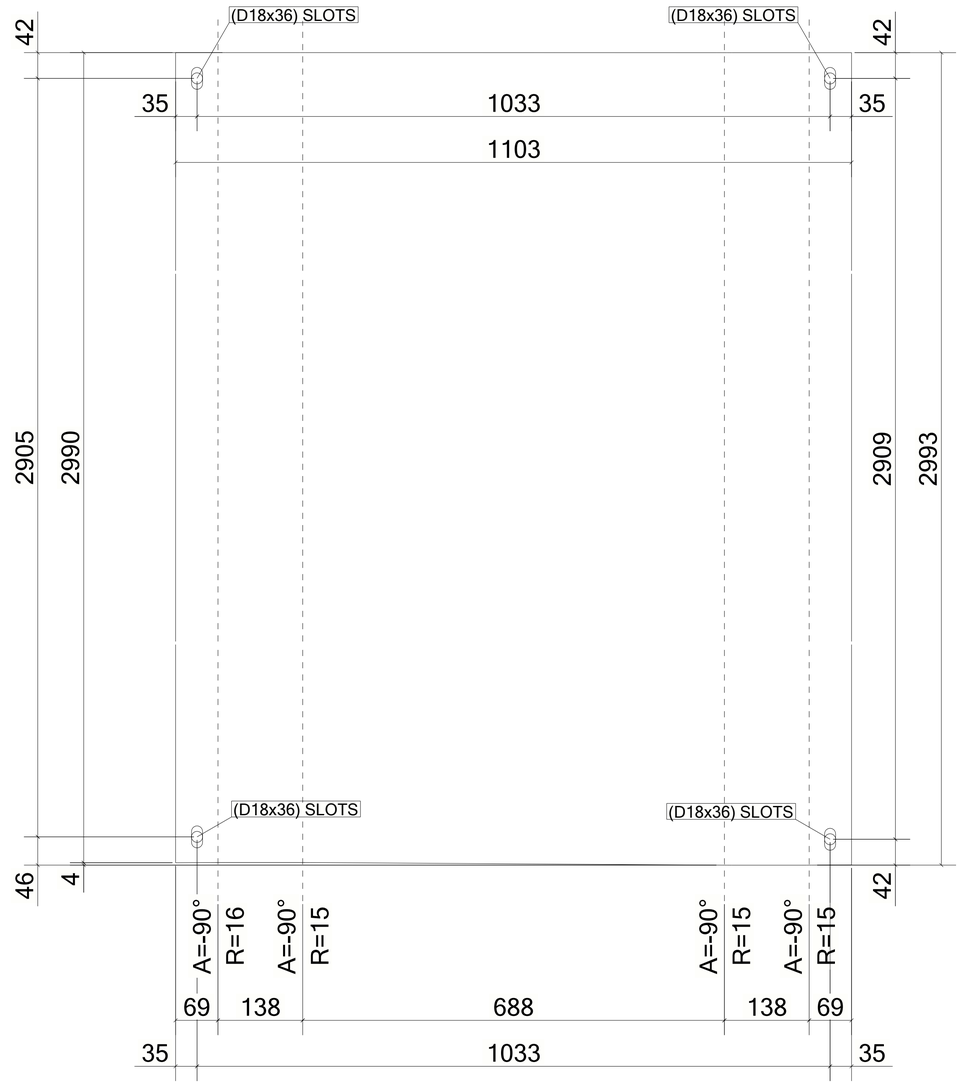

UNFOLDED VIEW

1 *REQUIRED AS DRAWN MARKED* **Z8-CHQ055**

6 October Monorail
Engineering Unit
Valid For Construction

GENERAL NOTES:

1. THE DIMENSIONS SHOWN ARE NOMINAL (IN MILLIMETERS), U.N.O.
2. WELD SIZESHALL BE AISC MINIMUM OF 6 mm UNLESS NOTED OTHERWISE.
3. ALL FIELD WELDS SHALL BE INSPECTED PER QUALITY ASSURANCE AND SPECIAL INSPECTIONS.

REFERENCE DRAWINGS

1	93M-BOA-NAT-LOT-04833
2	93M-BOA-NAT-LOT-09170
3	93M-BOA-NAT-LOT-01976
4	93M-BOA-NAT-LOT-20021
5	
6	
7	
8	
9	

6TH OF OCTOBER CITY RAIL TRANSIT MONORAIL

The Authority | Consultant: Hill International | Main Contractor: ORASCOM CONSTRUCTION, The Arab Contractors, BOMBARDIER | Structural Designer: INNOVA TRANSPORTATION

KEY PLAN:

SCALE: AS SHOWN | SHOPDRAWING | DATE: 12/05/2023

REV	DATE	DSG.	CHK.	APP.	AMENDMENTS	STATUS
B	12/05/2023	M.KH	M.KH	DR.M.M	ISSUED FOR INFORMATION	IFI
A	11/20/2022	M.KH	M.KH	DR.M.M	ISSUED FOR INFORMATION	IFI

DRAWING TITLE
6TH OF OCTOBER MONORAIL
SERVICE WALKWAYS
ZONE (1008)
Z8-CHQ055

Project Code	Rubric	Initiator	Lot	Ref	Number	Revision
93M	047	6ACC	60DE	PDWG	0813	B

Tekla structures

Same comments as
93M-0476-ACC-60DEP-DWG-08079-B.

REVIEWED WITH COMMENT
MONORAILS PROJECT

MATERIAL LIST FOR ASSEMBLY MK'D **Z8-CHQ054**

Mark	Profile	GRADE	No.	Length	Area	Weight
Z8-CHQ054	CHQD5*1103.4	S235JR	1	1585	3.30	64.04
				Total	3.30	64.04

BOLT LIST:-

BOLT \ STUD	BOLT DESCRIPTION	QTY	FINISH
BOLT	B1N2W16 X 50 A325M	4	

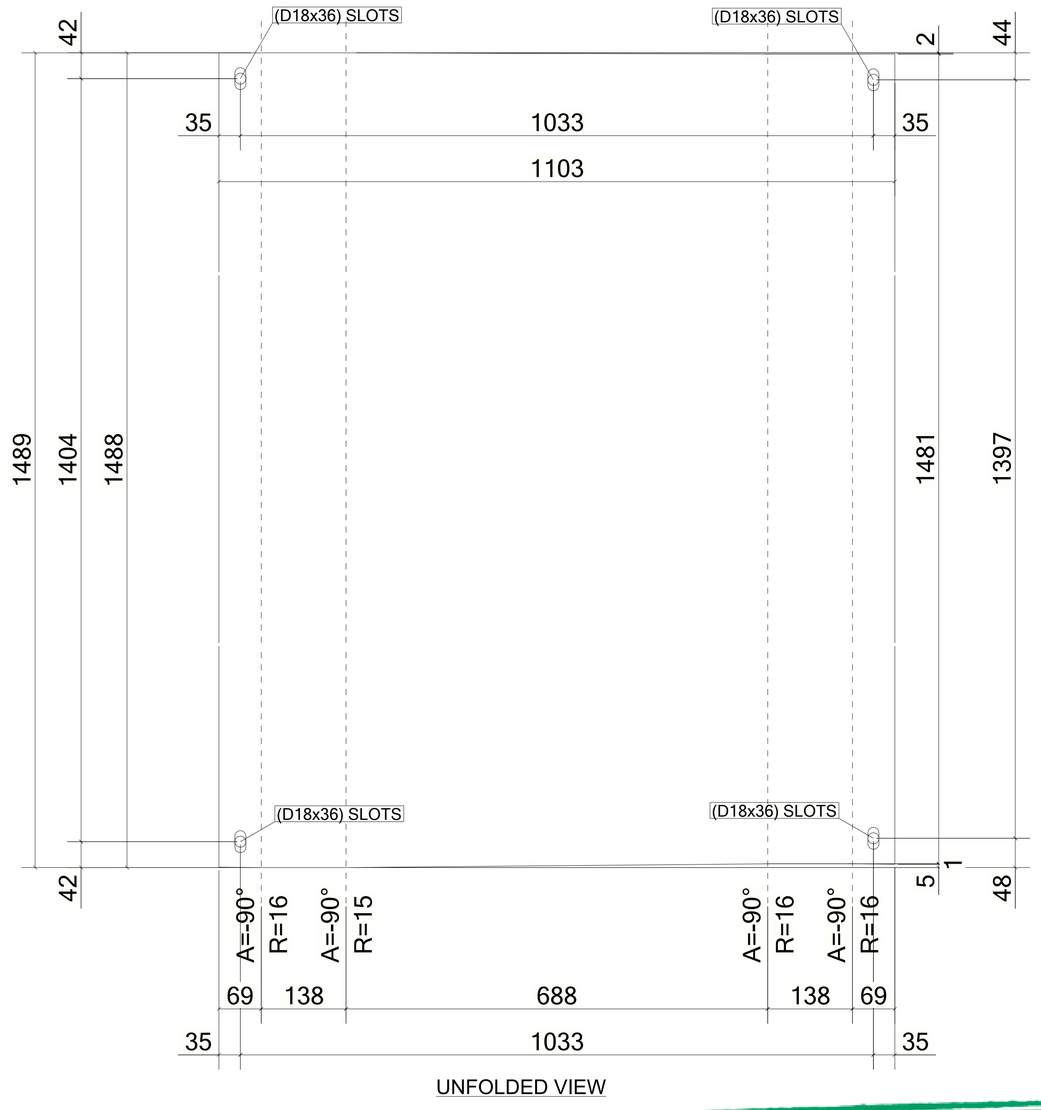

UNFOLDED VIEW

1 *REQUIRED AS DRAWN MARKED* **Z8-CHQ054**

6 October Monorail
Engineering Unit
Valid For Construction

GENERAL NOTES:

1. THE DIMENSIONS SHOWN ARE NOMINAL (IN MILLIMETERS), U.N.O.
2. WELD SIZESHALL BE AISC MINIMUM OF 6 mm UNLESS NOTED OTHERWISE.
3. ALL FIELD WELDS SHALL BE INSPECTED PER QUALITY ASSURANCE AND SPECIAL INSPECTIONS.

REFERENCE DRAWINGS

1	93M-BOA-NAT-LOT-04833
2	93M-BOA-NAT-LOT-09170
3	93M-BOA-NAT-LOT-01976
4	93M-BOA-NAT-LOT-20021
5	
6	
7	
8	
9	

6TH OF OCTOBER CITY RAIL TRANSIT MONORAIL

The Authority | Hill International Consultant | Main Contractor | Structural Designer

KEY PLAN:

SCALE: AS SHOWN | SHOPDRAWING | DATE: 12/05/2023

REV	DATE	DSG.	CHK.	APP.	AMENDMENTS	STATUS
B	12/05/2023	M.KH	M.KH	DR.M.M	ISSUED FOR INFORMATION	IFI
A	11/20/2022	M.KH	M.KH	DR.M.M	ISSUED FOR INFORMATION	IFI

DRAWING TITLE
6TH OF OCTOBER MONORAIL
SERVICE WALKWAYS
ZONE (1008)
Z8-CHQ054

Project Code	Rubric	Initiator	Lot	Ref	Number	Revision
93M0476	ACC	60DEP	DWG	08132		B

Tekla structures

Same comments as
93M-0476-ACC-60DEP-DWG-08079-B.

REVIEWED WITH COMMENT
MONORAILS PROJECT

MATERIAL LIST FOR ASSEMBLY MK'D **Z8-CHQ053**

Mark	Profile	GRADE	No.	Length	Area	Weight
Z8-CHQ053	CHQD5*1103.4	S235JR	1	3091	6.63	129.02
				Total	6.63	129.02

BOLT LIST:-

BOLT \ STUD	BOLT DESCRIPTION	QTY	FINISH
BOLT	B1N2W16 X 50 A325M	4	

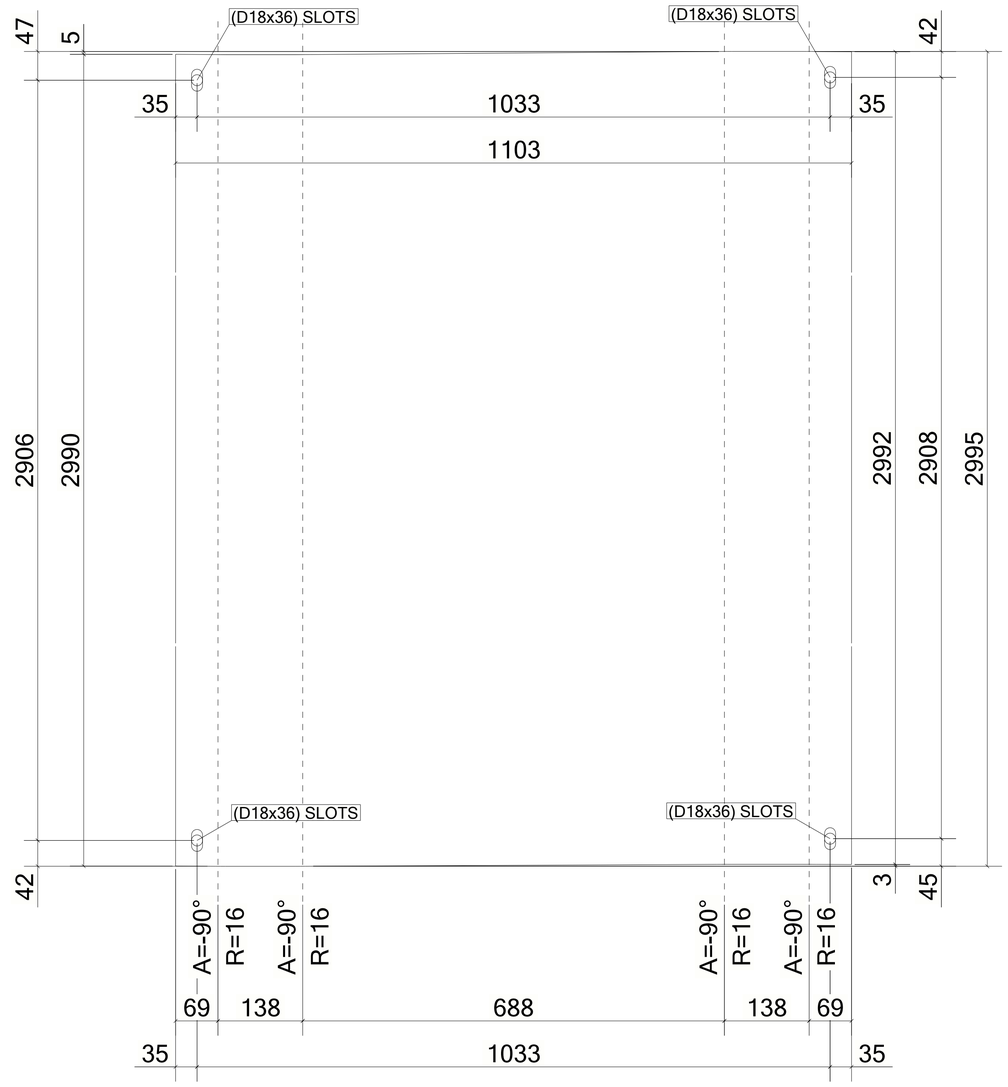

UNFOLDED VIEW

1 *REQUIRED AS DRAWN MARKED* **Z8-CHQ053**

6 October Monorail
Engineering Unit
Valid For Construction

GENERAL NOTES:

1. THE DIMENSIONS SHOWN ARE NOMINAL (IN MILLIMETERS), U.N.O.
2. WELD SIZESHALL BE AISC MINIMUM OF 6 mm UNLESS NOTED OTHERWISE.
3. ALL FIELD WELDS SHALL BE INSPECTED PER QUALITY ASSURANCE AND SPECIAL INSPECTIONS.

REFERENCE DRAWINGS

1	93M-BOA-NAT-LOT-04833
2	93M-BOA-NAT-LOT-09170
3	93M-BOA-NAT-LOT-01976
4	93M-BOA-NAT-LOT-20021
5	
6	
7	
8	
9	

6TH OF OCTOBER CITY RAIL TRANSIT MONORAIL

The Authority — Hill International Consultant — Main Contractor — Structural Designer

KEY PLAN:

SCALE: AS SHOWN | SHOPDRAWING | DATE: 12/05/2023

REV	DATE	DSG.	CHK.	APP.	AMENDMENTS	STATUS
B	12/05/2023	M.KH	M.KH	DR.M.M	ISSUED FOR INFORMATION	IFI
A	11/20/2022	M.KH	M.KH	DR.M.M	ISSUED FOR INFORMATION	IFI

DRAWING TITLE
6TH OF OCTOBER MONORAIL
SERVICE WALKWAYS
ZONE (1008)
Z8-CHQ053

Project Code	Rubric	Initiator	Lot	Ref	Number	Revision
93	M047	6ACC	60DE	PDWG	0813	B

Tekla structures

Same comments as
93M-0476-ACC-60DEP-DWG-08079-B.

REVIEWED WITH COMMENT
MONORAILS PROJECT

MATERIAL LIST FOR ASSEMBLY MK'D **Z8-CHQ052**

Mark	Profile	GRADE	No.	Length	Area	Weight
Z8-CHQ052	CHQD5*1103.4	S235JR	1	3091	6.63	129.01
				Total	6.63	129.01

BOLT LIST:-

BOLT \ STUD	BOLT DESCRIPTION	QTY	FINISH
BOLT	B1N2W16 X 50 A325M	4	

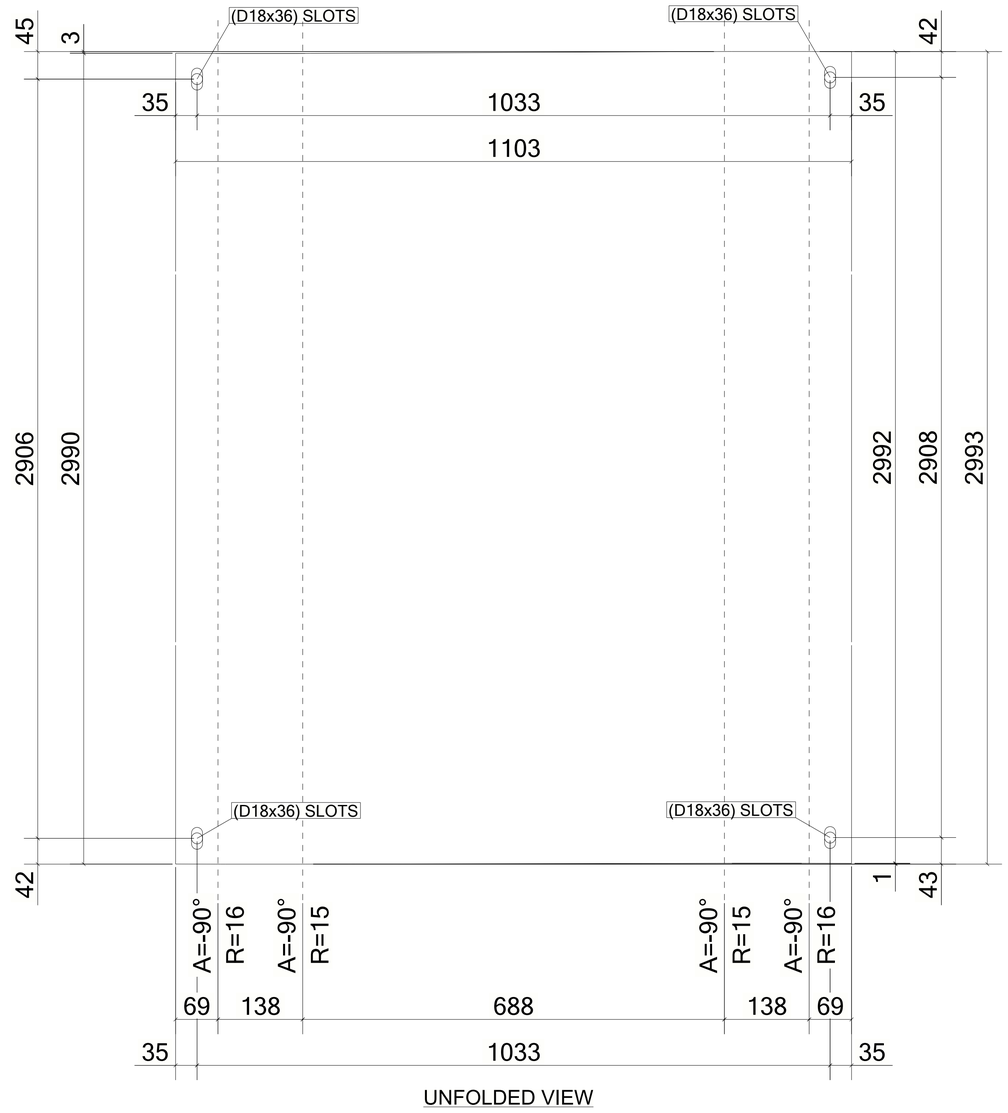

UNFOLDED VIEW

1 *REQUIRED AS DRAWN MARKED* **Z8-CHQ052**

6 October: Monorail
Engineering Unit
Valid For Construction

GENERAL NOTES:

1. THE DIMENSIONS SHOWN ARE NOMINAL (IN MILLIMETERS), U.N.O.
2. WELD SIZESHALL BE AISC MINIMUM OF 6 mm UNLESS NOTED OTHERWISE.
3. ALL FIELD WELDS SHALL BE INSPECTED PER QUALITY ASSURANCE AND SPECIAL INSPECTIONS.

REFERENCE DRAWINGS

1	93M-BOA-NAT-LOT-04833
2	93M-BOA-NAT-LOT-09170
3	93M-BOA-NAT-LOT-01976
4	93M-BOA-NAT-LOT-20021
5	
6	
7	
8	
9	

6TH OF OCTOBER CITY RAIL TRANSIT MONORAIL

The Authority | Consultant: Hill International | Main Contractor: ORASCOM CONSTRUCTION / BOMBARDIER | Structural Designer: INNOVA TRANSPORTATION

KEY PLAN:

SCALE	SHOPDRAWING	DATE
AS SHOWN		12/05/2023

REV	DATE	DSG.	CHK.	APP.	AMENDMENTS	STATUS
B	12/05/2023	M.KH	M.KH	DR.M.M	ISSUED FOR INFORMATION	IFI
A	11/20/2022	M.KH	M.KH	DR.M.M	ISSUED FOR INFORMATION	IFI

DRAWING TITLE
6TH OF OCTOBER MONORAIL
SERVICE WALKWAYS
ZONE (1008)
Z8-CHQ052

Project Code	Rubric	Initiator	Lot	Ref	Number	Revision
93	M047	6ACC	60DE	PDWG	0813	0 B

Tekla structures

Same comments as
93M-0476-ACC-60DEP-DWG-08079-B.

REVIEWED WITH COMMENT MONORAILS PROJECT

MATERIAL LIST FOR ASSEMBLY MK'D **Z8-CHQ051**

Mark	Profile	GRADE	No.	Length	Area	Weight
Z8-CHQ051	CHQD5*1103.4	S235JR	1	3090	6.63	128.96
				Total	6.63	128.96

BOLT LIST:-

BOLT \ STUD	BOLT DESCRIPTION		QTY	FINISH
BOLT	B1N2W 16 X 50	A325M	4	

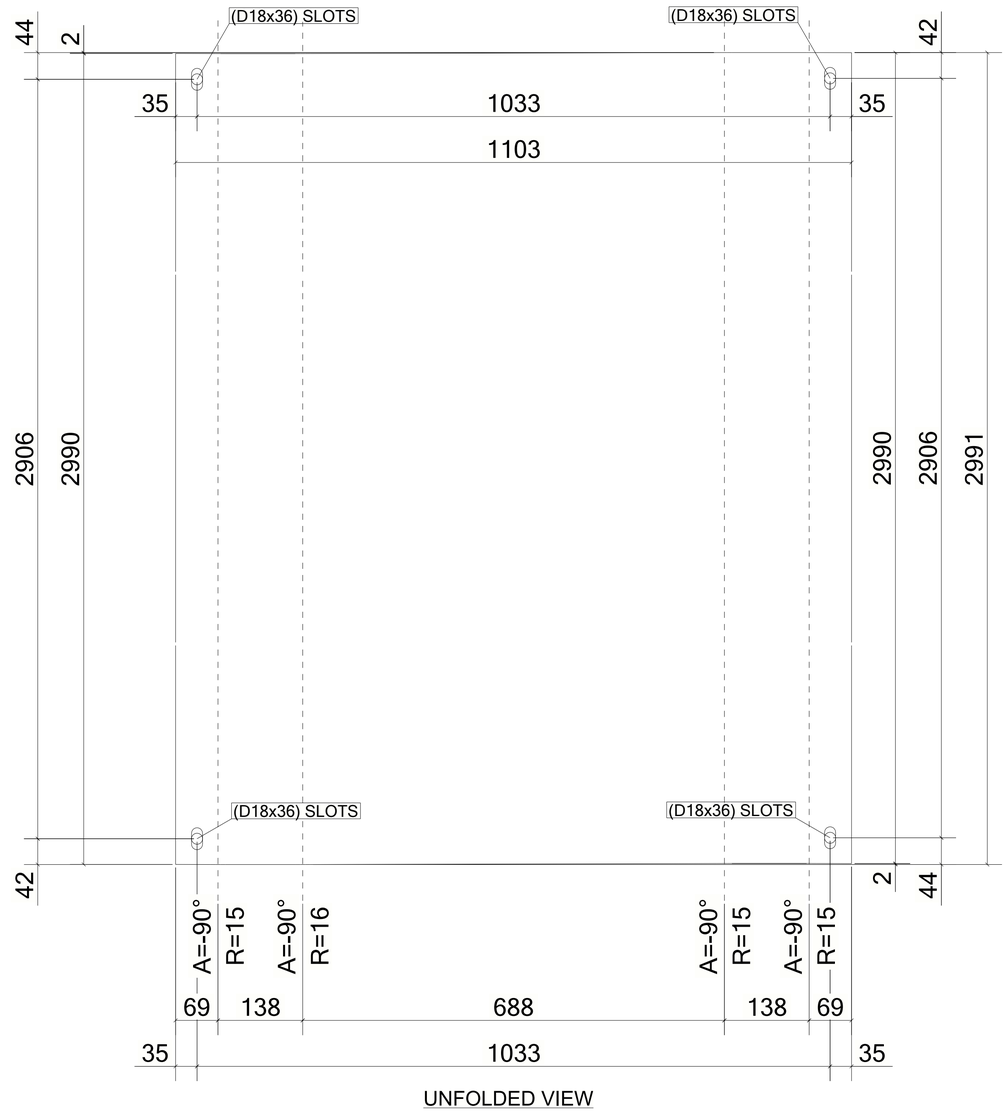

UNFOLDED VIEW

6 October Monorail Engineering Unit
Valid For Construction

1 *REQUIRED AS DRAWN MARKED* **Z8-CHQ051**

GENERAL NOTES:

1. THE DIMENSIONS SHOWN ARE NOMINAL (IN MILLIMETERS), U.N.O.
2. WELD SIZESHALL BE AISC MINIMUM OF 6 mm UNLESS NOTED OTHERWISE.
3. ALL FIELD WELDS SHALL BE INSPECTED PER QUALITY ASSURANCE AND SPECIAL INSPECTIONS.

REFERENCE DRAWINGS

1	93M-BOA-NAT-LOT-04833
2	93M-BOA-NAT-LOT-09170
3	93M-BOA-NAT-LOT-01976
4	93M-BOA-NAT-LOT-20021
5	
6	
7	
8	
9	

6TH OF OCTOBER CITY RAIL TRANSIT MONORAIL

The Authority | Hill International Consultant | ORASCOM BOMBARDIER Main Contractor | INNOVA Structural Designer

KEY PLAN:

SCALE	SHOPDRAWING	DATE
AS SHOWN		12/05/2023

REV	DATE	DSG.	CHK.	APP.	AMENDMENTS	STATUS
B	12/05/2023	M.KH	M.KH	DR.M.M	ISSUED FOR INFORMATION	IFI
A	11/20/2022	M.KH	M.KH	DR.M.M	ISSUED FOR INFORMATION	IFI

DRAWING TITLE
6TH OF OCTOBER MONORAIL SERVICE WALKWAYS ZONE (1008)
Z8-CHQ051

Project Code	Rubric	Initiator	Lot	Ref	Number	Revision
93M	0476	ACC	60DEP	DWG	08129	B

Tekla structures

Same comments as 93M-0476-ACC-60DEP-DWG-08079-B.

REVIEWED WITH COMMENT
MONORAILS PROJECT

MATERIAL LIST FOR ASSEMBLY MK'D **Z8-CHQ050**

Mark	Profile	GRADE	No.	Length	Area	Weight
Z8-CHQ050	CHQD5*1103.4	S235JR	1	3090	6.63	128.98
				Total	6.63	128.98

BOLT LIST:-

BOLT \ STUD	BOLT DESCRIPTION	QTY	FINISH
BOLT	B1N2W16 X 50 A325M	4	

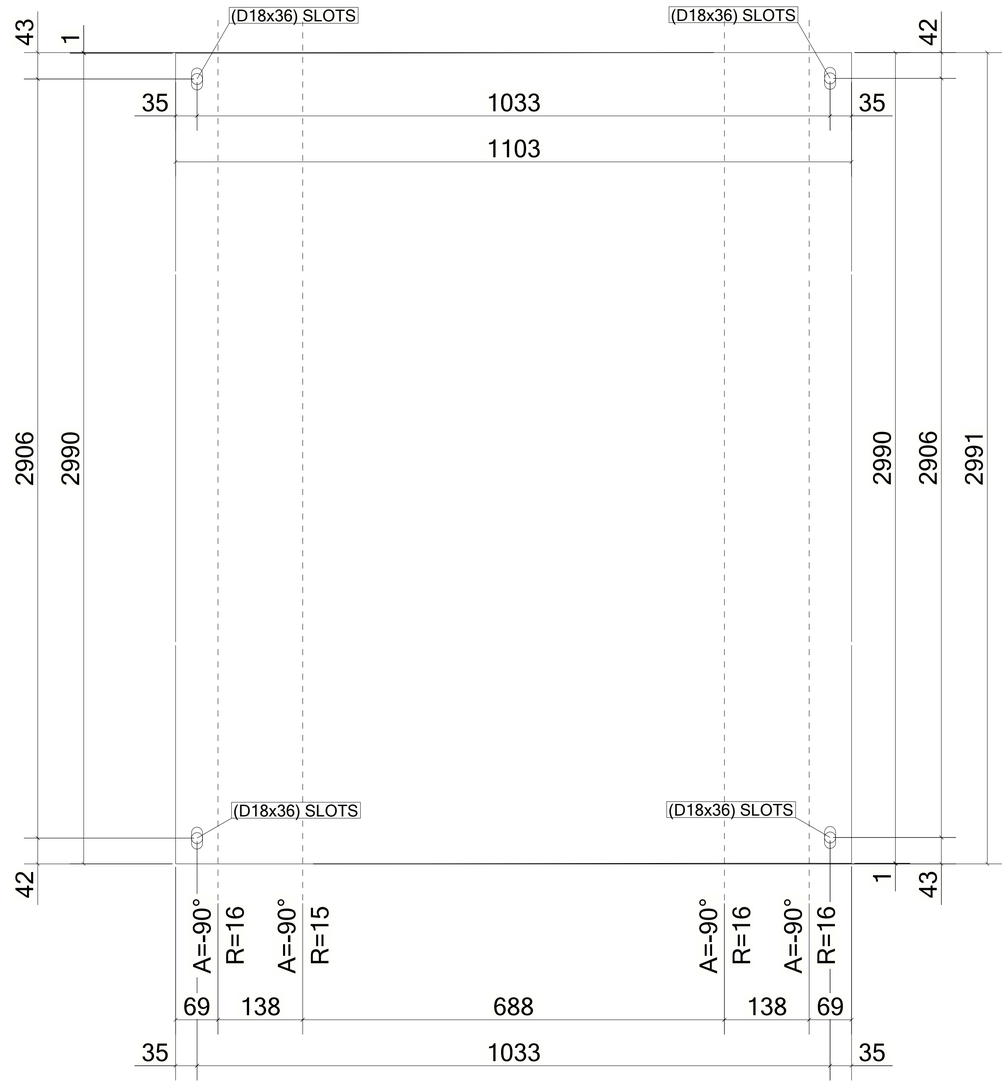

UNFOLDED VIEW

13 *REQUIRED AS DRAWN MARKED* **Z8-CHQ050**

6 October Monorail
Engineering Unit
Valid For Construction

GENERAL NOTES:

1. THE DIMENSIONS SHOWN ARE NOMINAL (IN MILLIMETERS), U.N.O.
2. WELD SIZESHALL BE AISC MINIMUM OF 6 mm UNLESS NOTED OTHERWISE.
3. ALL FIELD WELDS SHALL BE INSPECTED PER QUALITY ASSURANCE AND SPECIAL INSPECTIONS.

REFERENCE DRAWINGS

1	93M-BOA-NAT-LOT-04833
2	93M-BOA-NAT-LOT-09170
3	93M-BOA-NAT-LOT-01976
4	93M-BOA-NAT-LOT-20021
5	
6	
7	
8	
9	

6TH OF OCTOBER CITY RAIL TRANSIT MONORAIL

The Authority | Hill International Consultant | Main Contractor | Structural Designer

KEY PLAN:

SCALE: AS SHOWN | SHOPDRAWING | DATE: 12/05/2023

REV	DATE	DSG.	CHK.	APP.	AMENDMENTS	STATUS
B	12/05/2023	M.KH	M.KH	DR.M.M	ISSUED FOR INFORMATION	IFI
A	11/20/2022	M.KH	M.KH	DR.M.M	ISSUED FOR INFORMATION	IFI

DRAWING TITLE
6TH OF OCTOBER MONORAIL
SERVICE WALKWAYS
ZONE (1008)
Z8-CHQ050

Project Code	Rubric	Initiator	Lot	Ref	Number	Revision
93M	047	6ACC	60DEP	DWG	08128	B

Tekla structures

Same comments as
93M-0476-ACC-60DEP-DWG-08079-B.

REVIEWED WITH COMMENT
MONORAILS PROJECT

MATERIAL LIST FOR ASSEMBLY MK'D **Z8-CHQ049**

Mark	Profile	GRADE	No.	Length	Area	Weight
Z8-CHQ049	CHQD5*1103.4	S235JR	1	3089	6.63	128.93
				Total	6.63	128.93

BOLT LIST:-

BOLT \ STUD	BOLT DESCRIPTION		QTY	FINISH
BOLT	B1N2W16 X 40	A325M	2	
BOLT	B1N2W16 X 50	A325M	2	

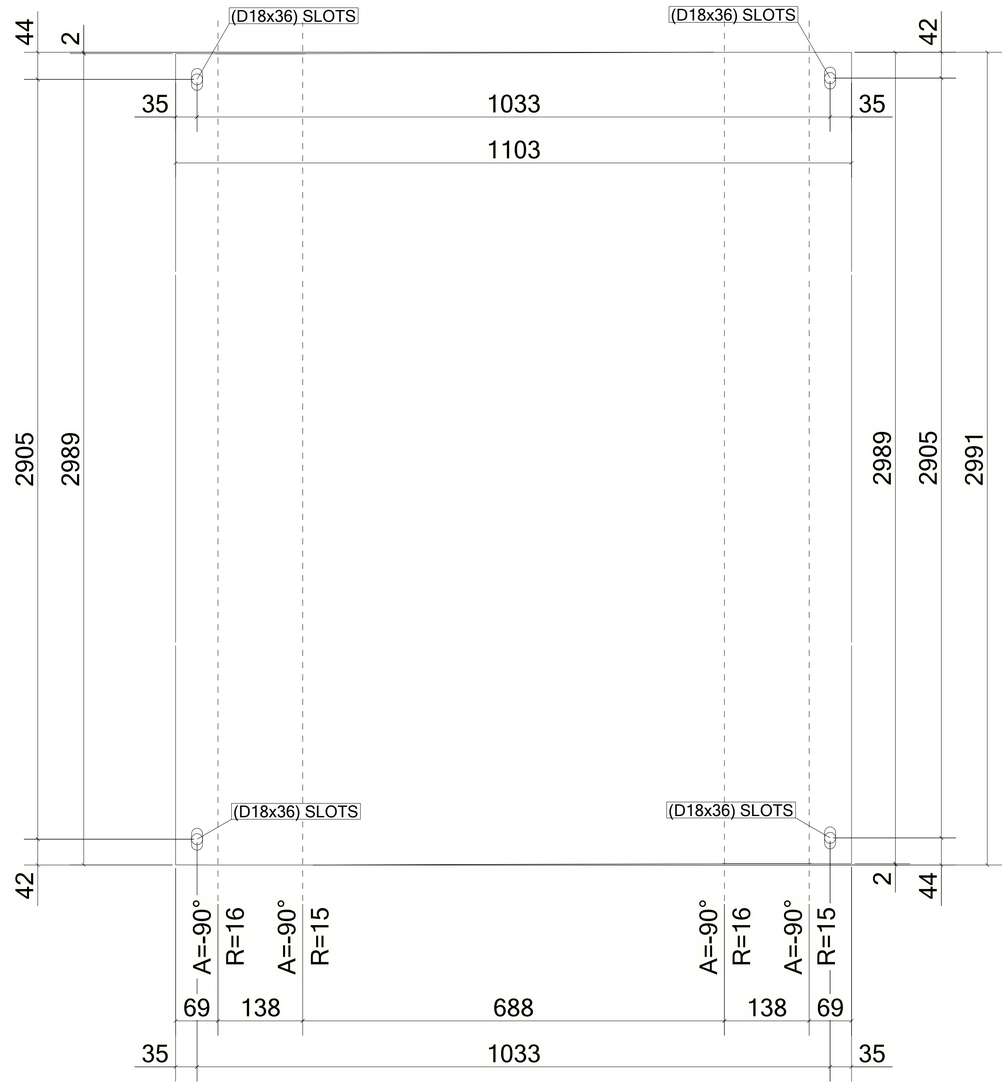

UNFOLDED VIEW

4 *REQUIRED AS DRAWN MARKED* **Z8-CHQ049**

6 October Monorail
Engineering Unit
Valid For Construction

GENERAL NOTES:

1. THE DIMENSIONS SHOWN ARE NOMINAL (IN MILLIMETERS), U.N.O.
2. WELD SIZESHALL BE AISC MINIMUM OF 6 mm UNLESS NOTED OTHERWISE.
3. ALL FIELD WELDS SHALL BE INSPECTED PER QUALITY ASSURANCE AND SPECIAL INSPECTIONS.

REFERENCE DRAWINGS

1	93M-BOA-NAT-LOT-04833
2	93M-BOA-NAT-LOT-09170
3	93M-BOA-NAT-LOT-01976
4	93M-BOA-NAT-LOT-20021
5	
6	
7	
8	
9	

6TH OF OCTOBER CITY RAIL TRANSIT MONORAIL

The Authority | Hill International Consultant | Main Contractor | Structural Designer

KEY PLAN:

SCALE	SHOPDRAWING	DATE
AS SHOWN		12/05/2023

REV	DATE	DSG.	CHK.	APP.	AMENDMENTS	STATUS
B	12/05/2023	M.KH	M.KH	DR.M.M	ISSUED FOR INFORMATION	IFI
A	11/20/2022	M.KH	M.KH	DR.M.M	ISSUED FOR INFORMATION	IFI

DRAWING TITLE
6TH OF OCTOBER MONORAIL
SERVICE WALKWAYS
ZONE (1008)
Z8-CHQ049

Project Code	Rubric	Initiator	Lot	Ref	Number	Revision
93M	047	6ACC	60DEP	DWG	08127	B

Tekla structures

Same comments as
93M-0476-ACC-60DEP-DWG-08079-B.

REVIEWED WITH COMMENT
MONORAILS PROJECT

MATERIAL LIST FOR ASSEMBLY MK'D **Z8-CHQ048**

Mark	Profile	GRADE	No.	Length	Area	Weight
Z8-CHQ048	CHQD5*1103.4	S235JR	1	3093	6.64	129.09
				Total	6.64	129.09

BOLT LIST:-

BOLT \ STUD	BOLT DESCRIPTION	QTY	FINISH
BOLT	B1N2W16 X 50 A325M	4	

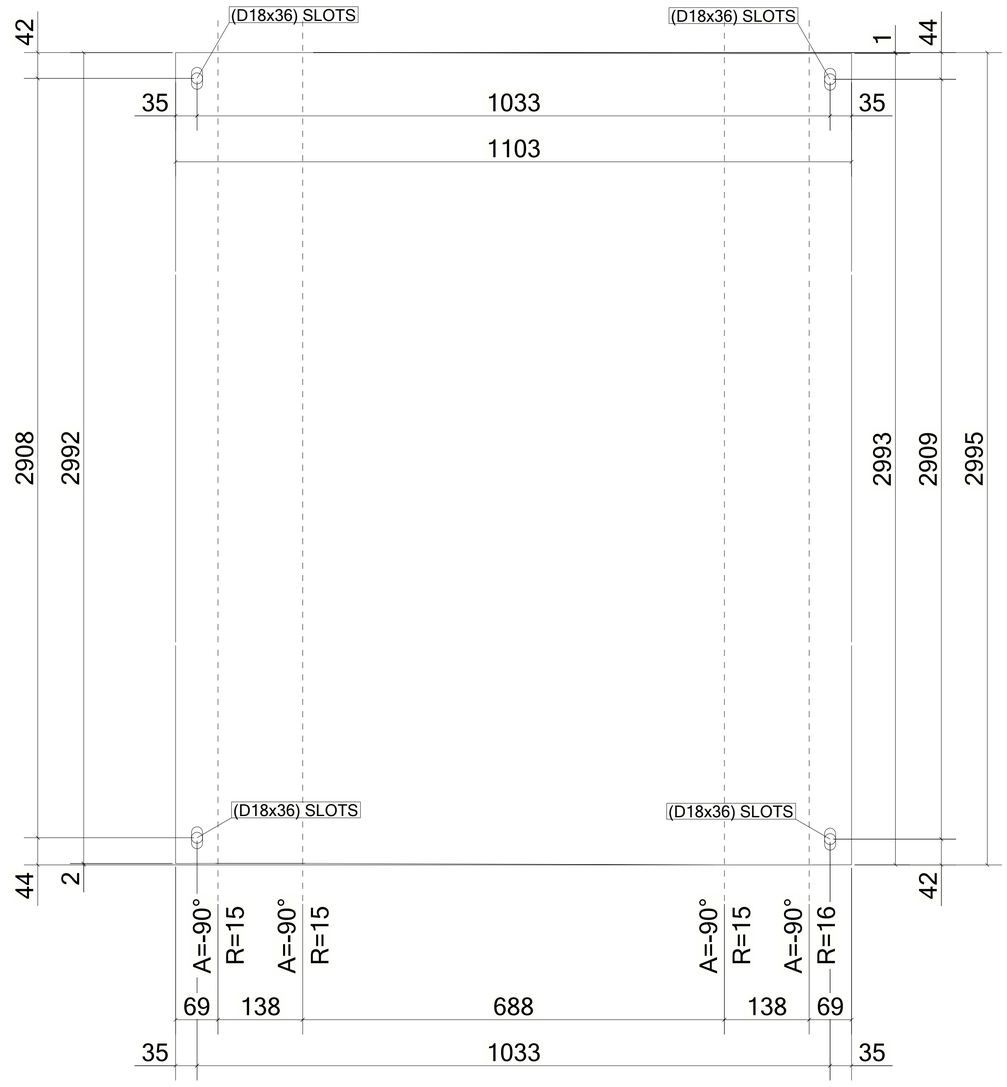

UNFOLDED VIEW

1 *REQUIRED AS DRAWN MARKED* **Z8-CHQ048**

6 October Monorail
Engineering Unit
Valid For Construction

GENERAL NOTES:

1. THE DIMENSIONS SHOWN ARE NOMINAL (IN MILLIMETERS), U.N.O.
2. WELD SIZESHALL BE AISC MINIMUM OF 6 mm UNLESS NOTED OTHERWISE.
3. ALL FIELD WELDS SHALL BE INSPECTED PER QUALITY ASSURANCE AND SPECIAL INSPECTIONS.

REFERENCE DRAWINGS

1	93M-BOA-NAT-LOT-04833
2	93M-BOA-NAT-LOT-09170
3	93M-BOA-NAT-LOT-01976
4	93M-BOA-NAT-LOT-20021
5	
6	
7	
8	
9	

6TH OF OCTOBER CITY RAIL TRANSIT MONORAIL

The Authority | Consultant: Hill International | Main Contractor: ORASCOM CONSTRUCTION, BOMBARDIER | Structural Designer: INNOVA TRANSPORTATION

KEY PLAN:

SCALE	SHOPDRAWING	DATE
AS SHOWN		12/05/2023

REV	DATE	DSG.	CHK.	APP.	AMENDMENTS	STATUS
B	12/05/2023	M.KH	M.KH	DR.M.M	ISSUED FOR INFORMATION	IFI
A	11/20/2022	M.KH	M.KH	DR.M.M	ISSUED FOR INFORMATION	IFI

DRAWING TITLE
6TH OF OCTOBER MONORAIL
SERVICE WALKWAYS
ZONE (1008)
Z8-CHQ048

Project Code	Rubric	Initiator	Lot	Ref	Number	Revision
93M	047	6ACC	60DEP	DWG	08126	B

Tekla structures

Same comments as
93M-0476-ACC-60DEP-DWG-08079-B.

REVIEWED WITH COMMENT MONORAILS PROJECT

MATERIAL LIST FOR ASSEMBLY MK'D **Z8-CHQ047**

Mark	Profile	GRADE	No.	Length	Area	Weight
Z8-CHQ047	CHQD5*1103.4	S235JR	1	2038	4.31	83.66
				Total	4.31	83.66

BOLT LIST:-

BOLT \ STUD	BOLT DESCRIPTION		QTY	FINISH
BOLT	B1N2W 16 X 50	A325M	4	

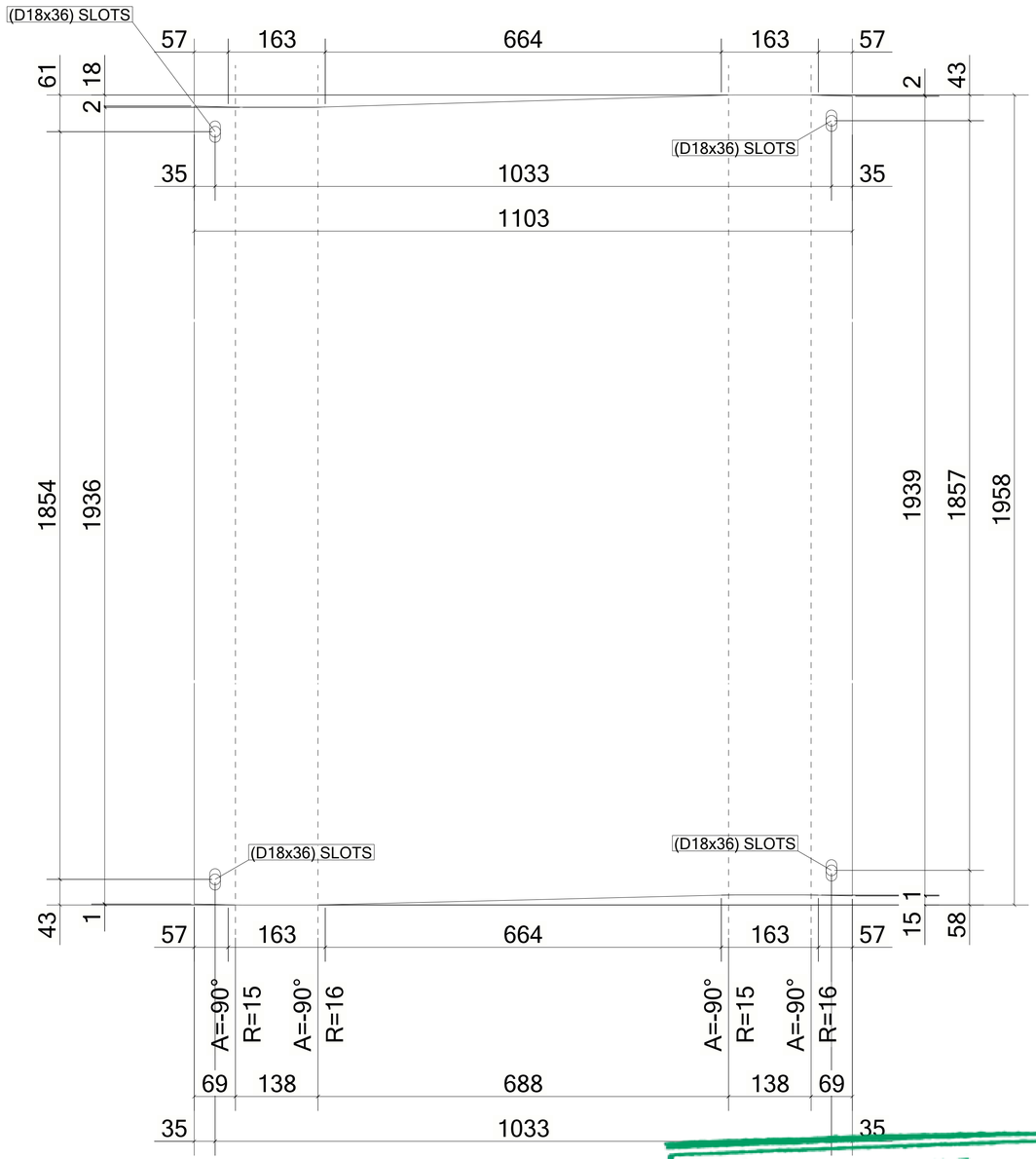

UNFOLDED VIEW

1 *REQUIRED AS DRAWN MARKED* **Z8-CHQ047**

6 October Monorail
Engineering Unit
Valid For Construction

GENERAL NOTES:

1. THE DIMENSIONS SHOWN ARE NOMINAL (IN MILLIMETERS), U.N.O.
2. WELD SIZESHALL BE AISC MINIMUM OF 6 mm UNLESS NOTED OTHERWISE.
3. ALL FIELD WELDS SHALL BE INSPECTED PER QUALITY ASSURANCE AND SPECIAL INSPECTIONS.

REFERENCE DRAWINGS

1	93M-BOA-NAT-LOT-04833
2	93M-BOA-NAT-LOT-09170
3	93M-BOA-NAT-LOT-01976
4	93M-BOA-NAT-LOT-20021
5	
6	
7	
8	
9	

6TH OF OCTOBER CITY RAIL TRANSIT MONORAIL

The Authority | Hill International Consultant | ORASCOM BOMBARDIER Main Contractor | INNOVA Structural Designer

KEY PLAN:

SCALE	SHOPDRAWING	DATE
AS SHOWN		12/05/2023

REV	DATE	DSG.	CHK.	APP.	AMENDMENTS	STATUS
B	12/05/2023	M.KH	M.KH	DR.M.M	ISSUED FOR INFORMATION	IFI
A	11/20/2022	M.KH	M.KH	DR.M.M	ISSUED FOR INFORMATION	IFI

DRAWING TITLE
6TH OF OCTOBER MONORAIL
SERVICE WALKWAYS
ZONE (1008)
Z8-CHQ047

Project Code	Rubric	Initiator	Lot	Ref	Number	Revision
93M	0476	ACC	60DEP	DWG	08125	B

Tekla structures

Same comments as 93M-0476-ACC-60DEP-DWG-08079-B.

REVIEWED WITH COMMENT
MONORAILS PROJECT

MATERIAL LIST FOR ASSEMBLY MK'D **Z8-CHQ046**

Mark	Profile	GRADE	No.	Length	Area	Weight
Z8-CHQ046	CHQD5*1103.4	S235JR	1	2040	4.31	83.67
				Total	4.31	83.67

BOLT LIST:-

BOLT \ STUD	BOLT DESCRIPTION	QTY	FINISH
BOLT	B1N2W16 X 50 A325M	4	

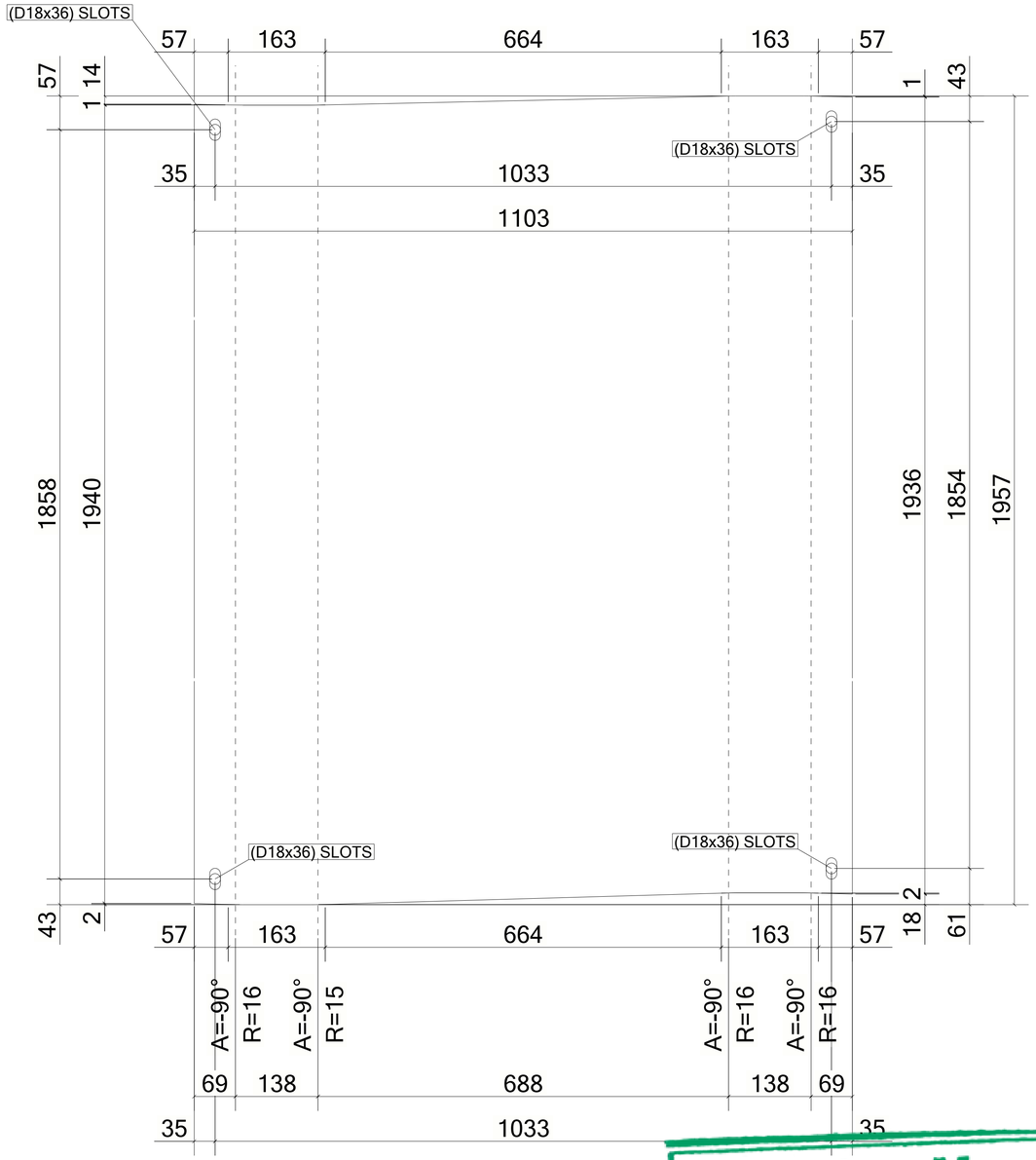

UNFOLDED VIEW

1 *REQUIRED AS DRAWN MARKED* **Z8-CHQ046**

6 October Monorail
Engineering Unit
Valid For Construction

GENERAL NOTES:

1. THE DIMENSIONS SHOWN ARE NOMINAL (IN MILLIMETERS), U.N.O.
2. WELD SIZESHALL BE AISC MINIMUM OF 6 mm UNLESS NOTED OTHERWISE.
3. ALL FIELD WELDS SHALL BE INSPECTED PER QUALITY ASSURANCE AND SPECIAL INSPECTIONS.

REFERENCE DRAWINGS

1	93M-BOA-NAT-LOT-04833
2	93M-BOA-NAT-LOT-09170
3	93M-BOA-NAT-LOT-01976
4	93M-BOA-NAT-LOT-20021
5	
6	
7	
8	
9	

6TH OF OCTOBER CITY RAIL TRANSIT MONORAIL

The Authority | Hill International Consultant | Main Contractor | Structural Designer

KEY PLAN:

SCALE	SHOPDRAWING	DATE
AS SHOWN		12/05/2023

REV	DATE	DSG.	CHK.	APP.	AMENDMENTS	STATUS
B	12/05/2023	M.KH	M.KH	DR.M.M	ISSUED FOR INFORMATION	IFI
A	11/20/2022	M.KH	M.KH	DR.M.M	ISSUED FOR INFORMATION	IFI

DRAWING TITLE
6TH OF OCTOBER MONORAIL
SERVICE WALKWAYS
ZONE (1008)
Z8-CHQ046

Project Code	Rubric	Initiator	Lot	Ref	Number	Revision
93M	0476	ACC	60	DEP	DWG0812	B

Tekla structures

Same comments as
93M-0476-ACC-60DEP-DWG-08079-B.

REVIEWED WITH COMMENT
MONORAILS PROJECT

MATERIAL LIST FOR ASSEMBLY MK'D **Z8-CHQ045**

Mark	Profile	GRADE	No.	Length	Area	Weight
Z8-CHQ045	CHQD5*1103.4	S235JR	1	3077	6.61	128.48
				Total	6.61	128.48

BOLT LIST:-

BOLT \ STUD	BOLT DESCRIPTION		QTY	FINISH
BOLT	B1N2W16 X 50	A325M	4	

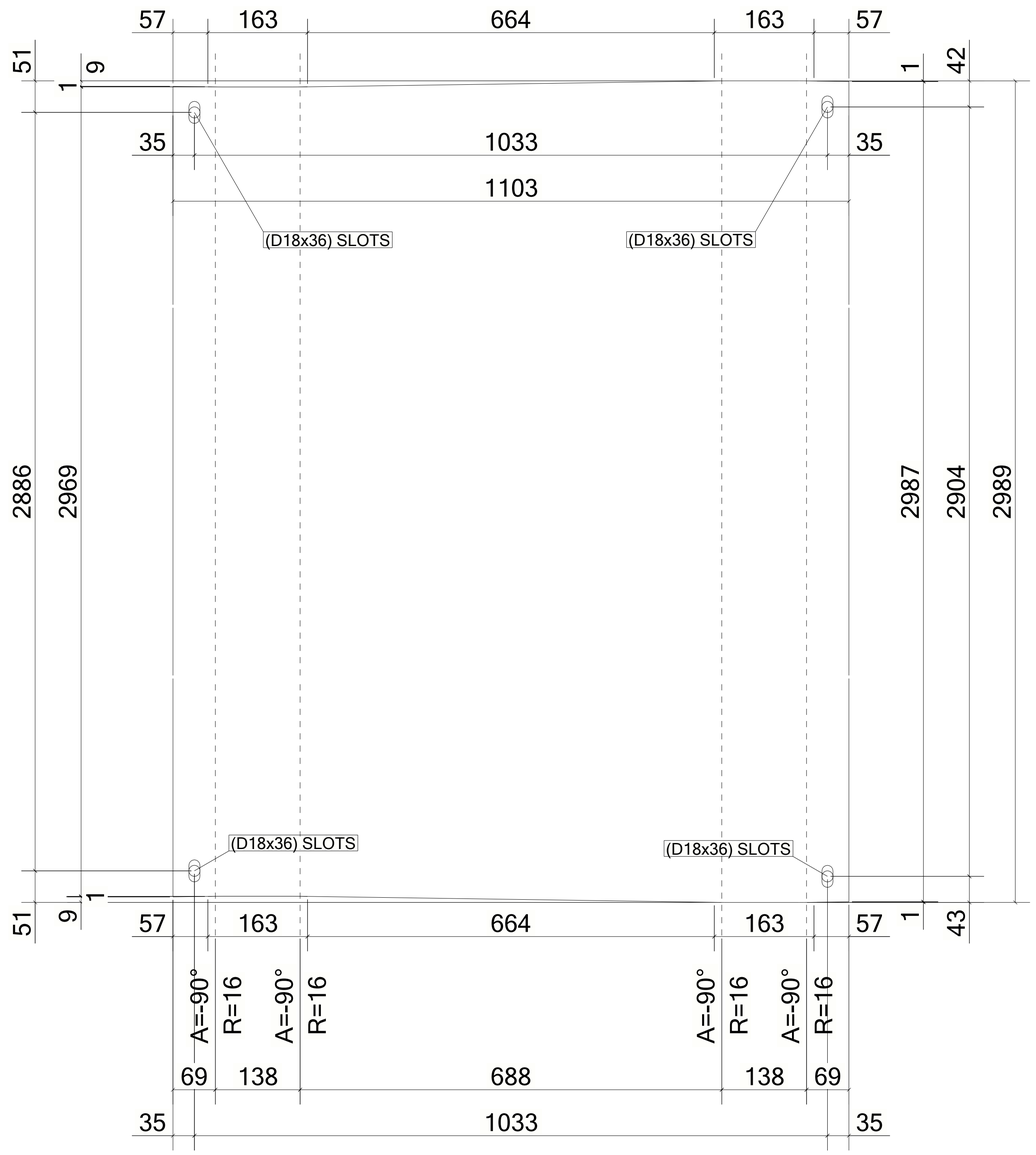

UNFOLDED VIEW

6 October: Monorail
Engineering Unit
Valid For Construction

1 *REQUIRED AS DRAWN MARKED* **Z8-CHQ045**

GENERAL NOTES:

1. THE DIMENSIONS SHOWN ARE NOMINAL (IN MILLIMETERS), U.N.O.
2. WELD SIZESHALL BE AISC MINIMUM OF 6 mm UNLESS NOTED OTHERWISE.
3. ALL FIELD WELDS SHALL BE INSPECTED PER QUALITY ASSURANCE AND SPECIAL INSPECTIONS.

REFERENCE DRAWINGS

1	93M-BOA-NAT-LOT-04833
2	93M-BOA-NAT-LOT-09170
3	93M-BOA-NAT-LOT-01976
4	93M-BOA-NAT-LOT-20021
5	
6	
7	
8	
9	

6TH OF OCTOBER CITY RAIL TRANSIT MONORAIL

The Authority | Consultant: Hill International | Main Contractor: ORASCOM CONSTRUCTION / BOMBARDIER | Structural Designer: INNOVA TRANSPORTATION

KEY PLAN:

SCALE	SHOPDRAWING	DATE
AS SHOWN		12/05/2023

REV	DATE	DSG.	CHK.	APP.	AMENDMENTS	STATUS
B	12/05/2023	M.KH	M.KH	DR.M.M	ISSUED FOR INFORMATION	IFI
A	11/20/2022	M.KH	M.KH	DR.M.M	ISSUED FOR INFORMATION	IFI

DRAWING TITLE
6TH OF OCTOBER MONORAIL
SERVICE WALKWAYS
ZONE (1008)
Z8-CHQ045

Project Code	Rubric	Initiator	Lot	Ref	Number	Revision
93	M047	6	ACC60	DEP	DWG0812	3 B

Tekla structures

Same comments as
93M-0476-ACC-60DEP-DWG-08079-B.

REVIEWED WITH COMMENT
MONORAILS PROJECT

MATERIAL LIST FOR ASSEMBLY MK'D **Z8-CHQ044**

Mark	Profile	GRADE	No.	Length	Area	Weight
Z8-CHQ044	CHQD5*1103.4	S235JR	1	2220	4.71	91.54
				Total	4.71	91.54

BOLT LIST:-

BOLT \ STUD	BOLT DESCRIPTION		QTY	FINISH
BOLT	B1N2W16 X 50	A325M	4	

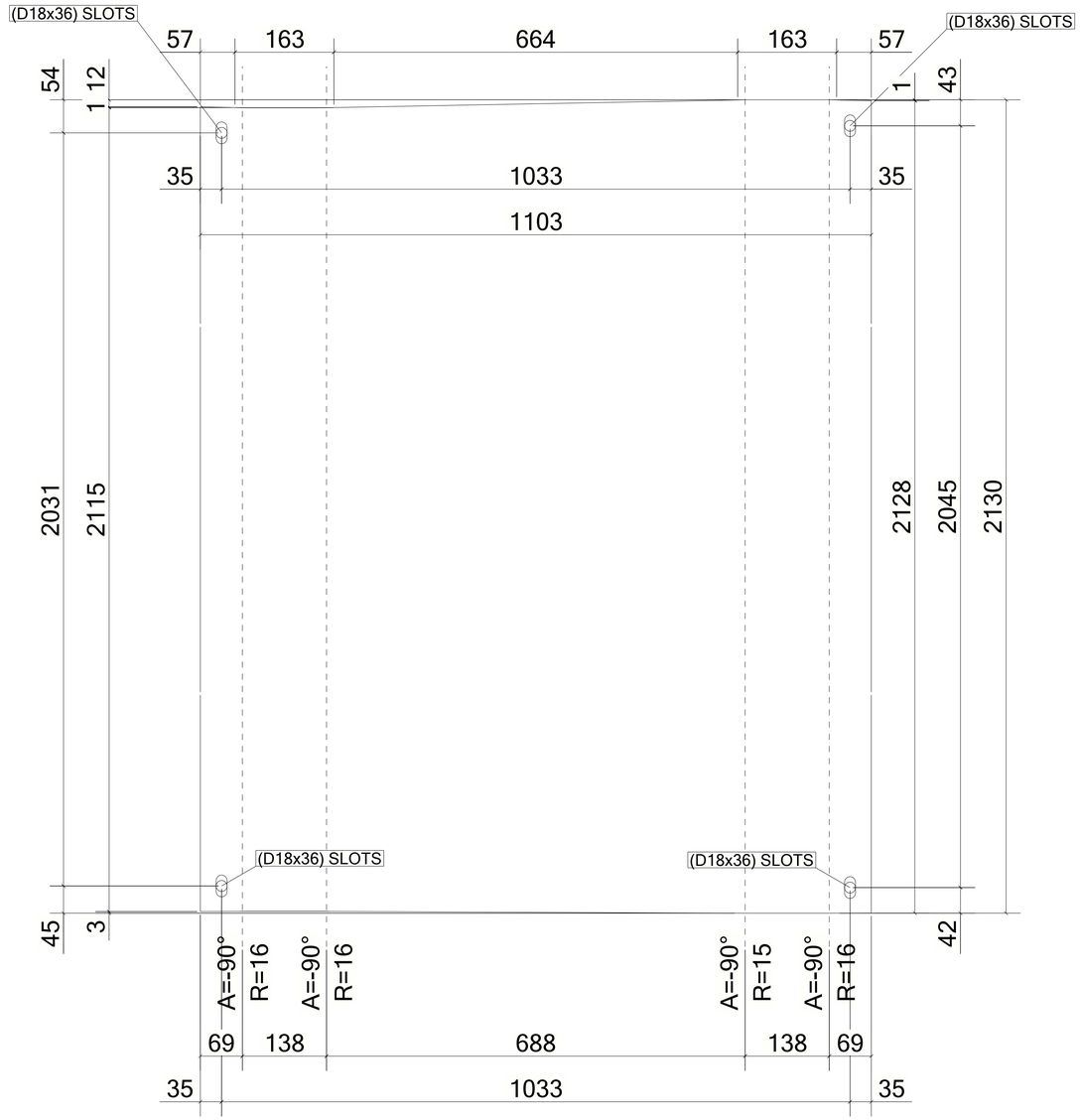

UNFOLDED VIEW

1 *REQUIRED AS DRAWN MARKED* **Z8-CHQ044**

6 October Monorail
Engineering Unit
Valid For Construction

GENERAL NOTES:

1. THE DIMENSIONS SHOWN ARE NOMINAL (IN MILLIMETERS), U.N.O.
2. WELD SIZESHALL BE AISC MINIMUM OF 6 mm UNLESS NOTED OTHERWISE.
3. ALL FIELD WELDS SHALL BE INSPECTED PER QUALITY ASSURANCE AND SPECIAL INSPECTIONS.

REFERENCE DRAWINGS

1	93M-BOA-NAT-LOT-04833
2	93M-BOA-NAT-LOT-09170
3	93M-BOA-NAT-LOT-01976
4	93M-BOA-NAT-LOT-20021
5	
6	
7	
8	
9	

6TH OF OCTOBER CITY RAIL TRANSIT MONORAIL

The Authority | Consultant: Hill International | Main Contractor: ORASCOM CONSTRUCTION, BOMBARDIER | Structural Designer: INNOVA TRANSPORTATION

KEY PLAN:

SCALE: AS SHOWN | SHOPDRAWING | DATE: 12/05/2023

REV	DATE	DSG.	CHK.	APP.	AMENDMENTS	STATUS
B	12/05/2023	M.KH	M.KH	DR.M.M	ISSUED FOR INFORMATION	IFI
A	11/20/2022	M.KH	M.KH	DR.M.M	ISSUED FOR INFORMATION	IFI

DRAWING TITLE
6TH OF OCTOBER MONORAIL
SERVICE WALKWAYS
ZONE (1008)
Z8-CHQ044

Project Code	Rubric	Initiator	Lot	Ref	Number	Revision
93M0476	ACC	60DEP	DWG	08122		B

Tekla structures

Same comments as
93M-0476-ACC-60DEP-DWG-08079-B.

REVIEWED WITH COMMENT
MONORAILS PROJECT

MATERIAL LIST FOR ASSEMBLY MK'D **Z8-CHQ043**

Mark	Profile	GRADE	No.	Length	Area	Weight
Z8-CHQ043	CHQD5*1103.4	S235JR	1	2218	4.70	91.41
				Total	4.70	91.41

BOLT LIST:-

BOLT \ STUD	BOLT DESCRIPTION	QTY	FINISH
BOLT	B1N2W16 X 50 A325M	4	

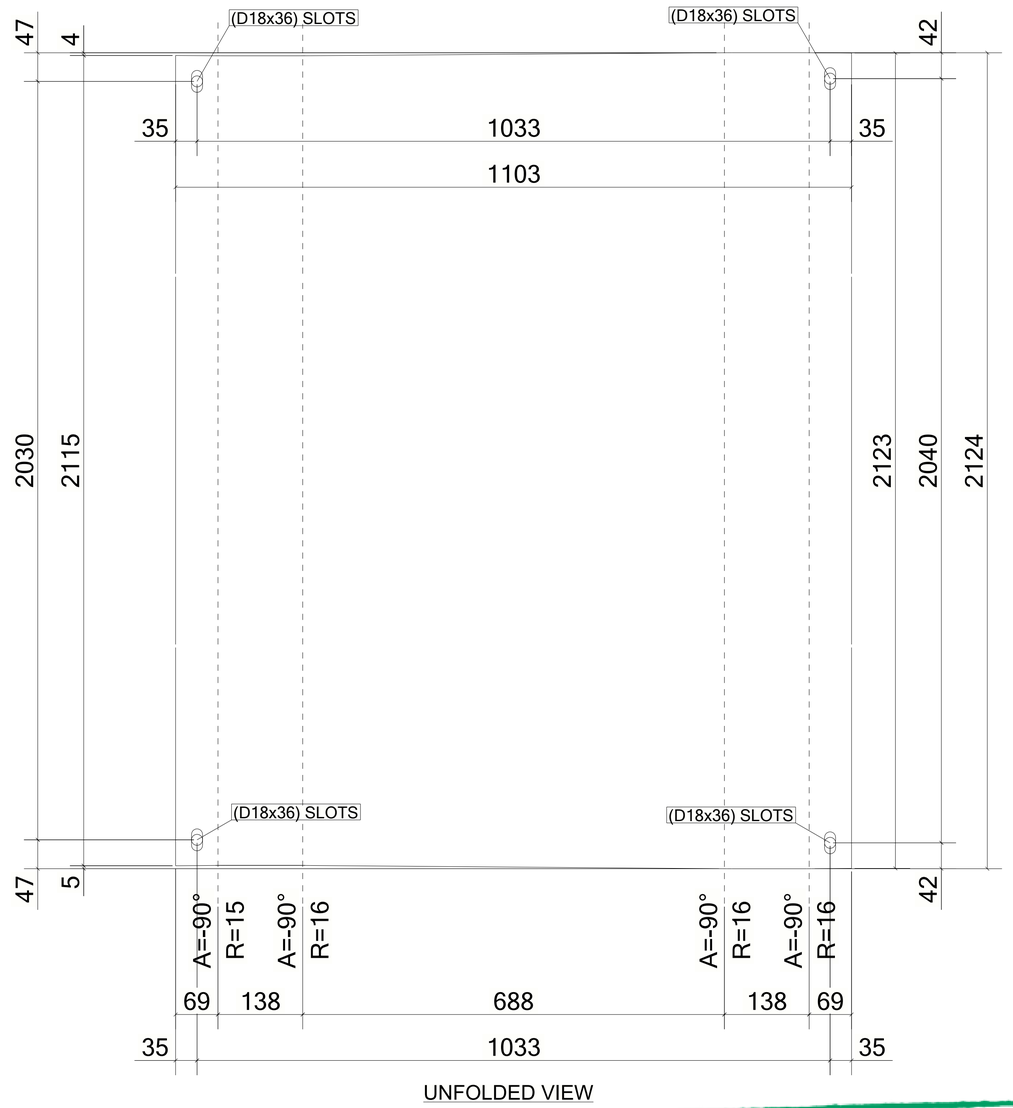

UNFOLDED VIEW

1 *REQUIRED AS DRAWN MARKED* **Z8-CHQ043**

6 October Monorail
Engineering Unit
Valid For Construction

GENERAL NOTES:

1. THE DIMENSIONS SHOWN ARE NOMINAL (IN MILLIMETERS), U.N.O.
2. WELD SIZESHALL BE AISC MINIMUM OF 6 mm UNLESS NOTED OTHERWISE.
3. ALL FIELD WELDS SHALL BE INSPECTED PER QUALITY ASSURANCE AND SPECIAL INSPECTIONS.

REFERENCE DRAWINGS

1	93M-BOA-NAT-LOT-04833
2	93M-BOA-NAT-LOT-09170
3	93M-BOA-NAT-LOT-01976
4	93M-BOA-NAT-LOT-20021
5	
6	
7	
8	
9	

6TH OF OCTOBER CITY RAIL TRANSIT MONORAIL

The Authority | Consultant | Main Contractor | Structural Designer

KEY PLAN:

SCALE: AS SHOWN | SHOPDRAWING | DATE: 12/05/2023

REV	DATE	DSG.	CHK.	APP.	AMENDMENTS	STATUS
B	12/05/2023	M.KH	M.KH	DR.M.M	ISSUED FOR INFORMATION	IFI
A	11/20/2022	M.KH	M.KH	DR.M.M	ISSUED FOR INFORMATION	IFI

DRAWING TITLE
6TH OF OCTOBER MONORAIL
SERVICE WALKWAYS
ZONE (1008)
Z8-CHQ043

Project Code	Rubric	Initiator	Lot	Ref	Number	Revision
93M0476	ACC	60DEP	DWG	08121		B

Tekla structures

Same comments as 93M-0476-ACC-60DEP-DWG-08079-B.

REVIEWED WITH COMMENT
MONORAILS PROJECT

MATERIAL LIST FOR ASSEMBLY MK'D **Z8-CHQ042**

Mark	Profile	GRADE	No.	Length	Area	Weight
Z8-CHQ042	CHQD5*1103.4	S235JR	1	3078	6.61	128.58
				Total	6.61	128.58

BOLT LIST:-

BOLT \ STUD	BOLT DESCRIPTION	QTY	FINISH
BOLT	B1N2W16 X 50 A325M	4	

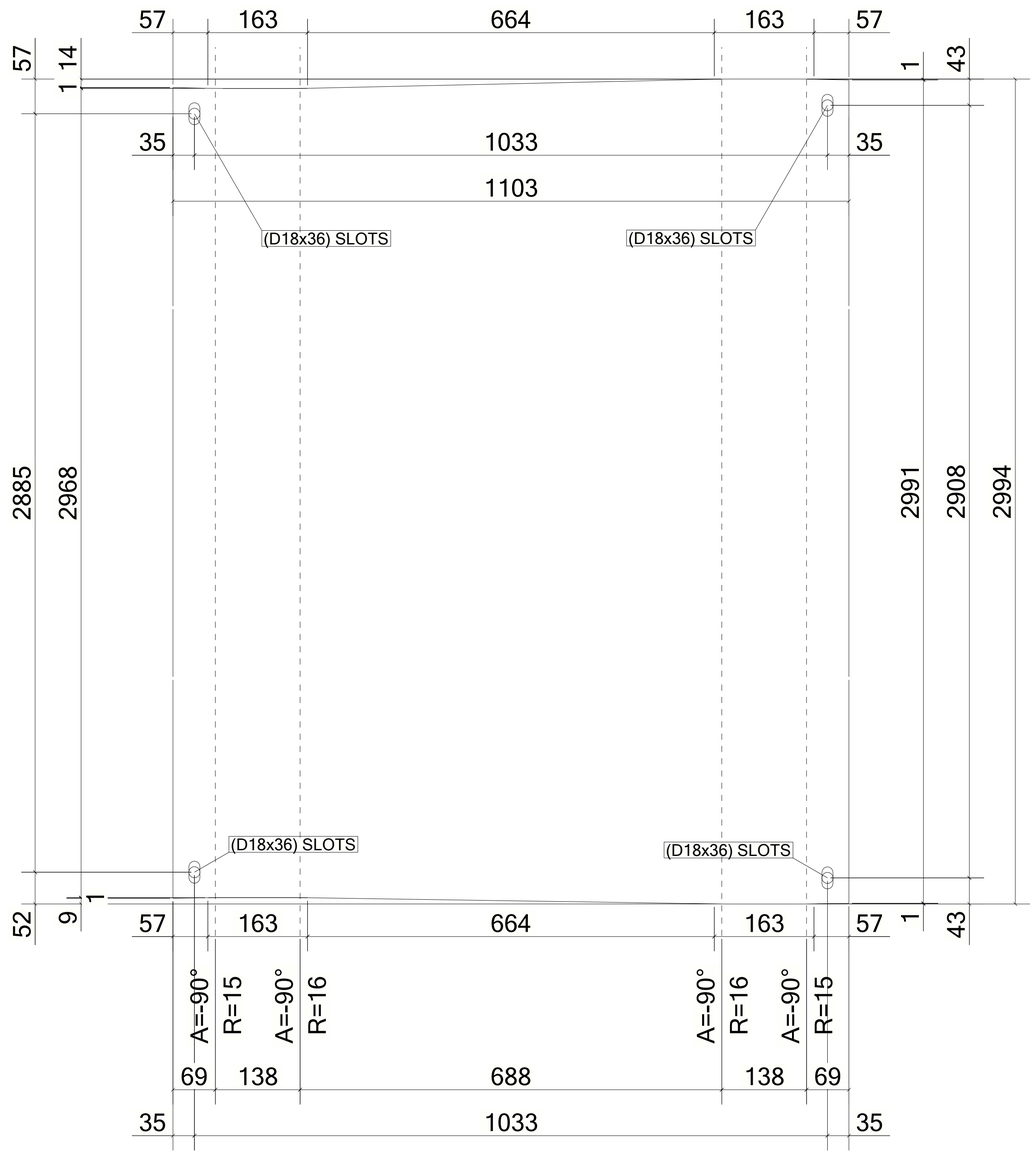

UNFOLDED VIEW

1 *REQUIRED AS DRAWN MARKED* **Z8-CHQ042**

6 October Monorail
Engineering Unit
Valid For Construction

GENERAL NOTES:

1. THE DIMENSIONS SHOWN ARE NOMINAL (IN MILLIMETERS), U.N.O.
2. WELD SIZESHALL BE AISC MINIMUM OF 6 mm UNLESS NOTED OTHERWISE.
3. ALL FIELD WELDS SHALL BE INSPECTED PER QUALITY ASSURANCE AND SPECIAL INSPECTIONS.

REFERENCE DRAWINGS

1	93M-BOA-NAT-LOT-04833
2	93M-BOA-NAT-LOT-09170
3	93M-BOA-NAT-LOT-01976
4	93M-BOA-NAT-LOT-20021
5	
6	
7	
8	
9	

6TH OF OCTOBER CITY RAIL TRANSIT MONORAIL

The Authority | Hill International Consultant | Main Contractor | Structural Designer

KEY PLAN:

SCALE	SHOPDRAWING	DATE
AS SHOWN		12/05/2023

REV	DATE	DSG.	CHK.	APP.	AMENDMENTS	STATUS
B	12/05/2023	M.KH	M.KH	DR.M.M	ISSUED FOR INFORMATION	IFI
A	11/20/2022	M.KH	M.KH	DR.M.M	ISSUED FOR INFORMATION	IFI

DRAWING TITLE
6TH OF OCTOBER MONORAIL
SERVICE WALKWAYS
ZONE (1008)
Z8-CHQ042

Project Code	Rubric	Initiator	Lot	Ref	Number	Revision
93M	047	6ACC	60DE	PDWG	0812	0 B

Tekla structures

Same comments as
93M-0476-ACC-60DEP-DWG-08079-B.

REVIEWED WITH COMMENT
MONORAILS PROJECT

MATERIAL LIST FOR ASSEMBLY MK'D **Z8-CHQ041**

Mark	Profile	GRADE	No.	Length	Area	Weight
Z8-CHQ041	CHQD5*1103.4	S235JR	1	3090	6.63	129.01
				Total	6.63	129.01

BOLT LIST:-

BOLT \ STUD	BOLT DESCRIPTION	QTY	FINISH
BOLT	B1N2W16 X 50 A325M	4	

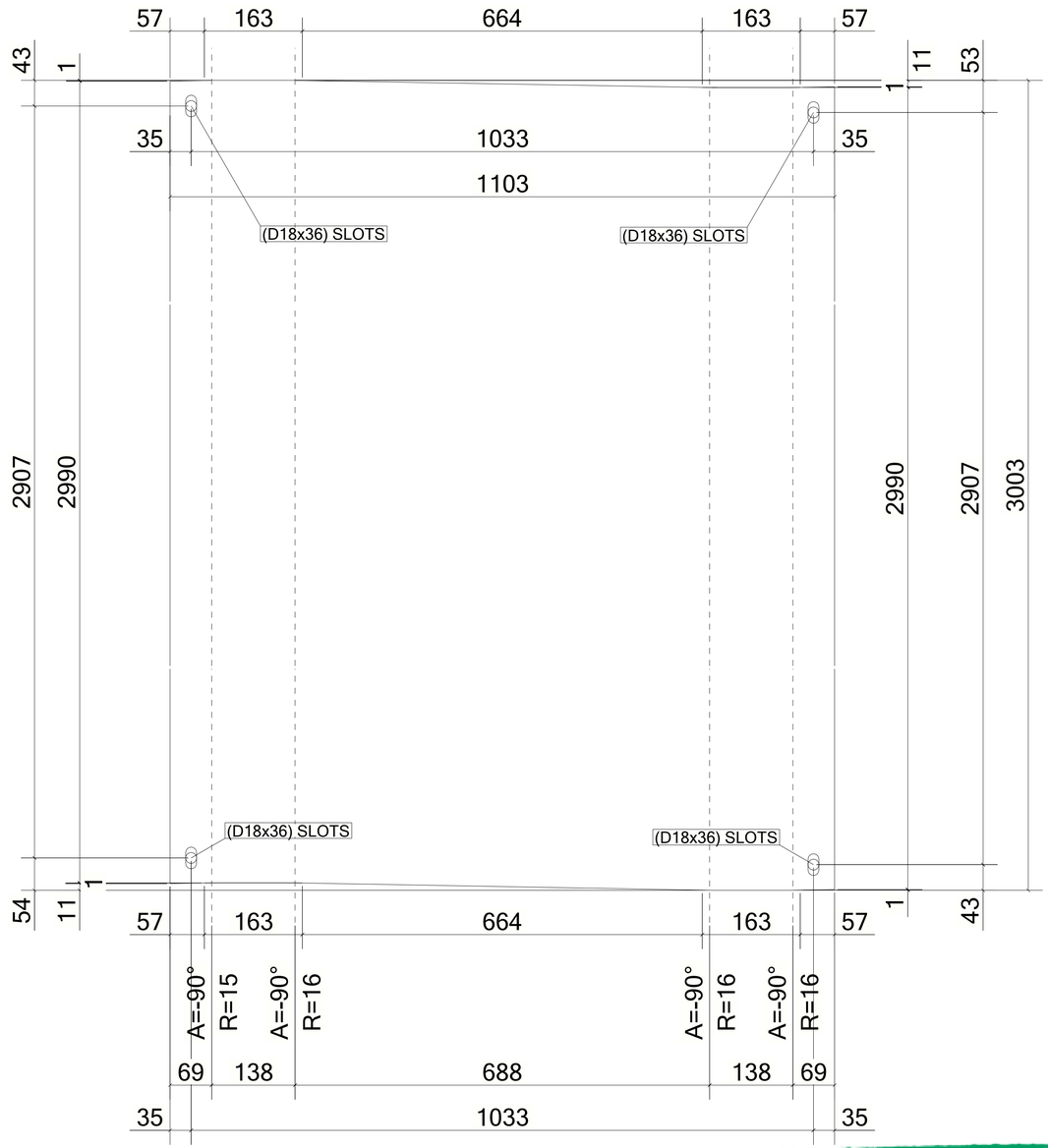

UNFOLDED VIEW

1 *REQUIRED AS DRAWN MARKED* **Z8-CHQ041**

6 October Monorail
Engineering Unit
Valid For Construction

GENERAL NOTES:

1. THE DIMENSIONS SHOWN ARE NOMINAL (IN MILLIMETERS), U.N.O.
2. WELD SIZESHALL BE AISC MINIMUM OF 6 mm UNLESS NOTED OTHERWISE.
3. ALL FIELD WELDS SHALL BE INSPECTED PER QUALITY ASSURANCE AND SPECIAL INSPECTIONS.

REFERENCE DRAWINGS

1	93M-BOA-NAT-LOT-04833
2	93M-BOA-NAT-LOT-09170
3	93M-BOA-NAT-LOT-01976
4	93M-BOA-NAT-LOT-20021
5	
6	
7	
8	
9	

6TH OF OCTOBER CITY RAIL TRANSIT MONORAIL

The Authority | Consultant: Hill International | Main Contractor: ORASCOM CONSTRUCTION / BOMBARDIER | Structural Designer: INNOVA TRANSPORTATION

KEY PLAN:

SCALE: AS SHOWN | SHOPDRAWING | DATE: 12/05/2023

REV	DATE	DSG.	CHK.	APP.	AMENDMENTS	STATUS
B	12/05/2023	M.KH	M.KH	DR.M.M	ISSUED FOR INFORMATION	IFI
A	11/20/2022	M.KH	M.KH	DR.M.M	ISSUED FOR INFORMATION	IFI

DRAWING TITLE
6TH OF OCTOBER MONORAIL
SERVICE WALKWAYS
ZONE (1008)
Z8-CHQ041

Project Code	Rubric	Initiator	Lot	Ref	Number	Revision
93	M04	76	ACC60	DEP	DWG0811	9 B

Tekla structures

Same comments as 93M-0476-ACC-60DEP-DWG-08079-B.

REVIEWED WITH COMMENT
MONORAILS PROJECT

MATERIAL LIST FOR ASSEMBLY MK'D **Z8-CHQ040**

Mark	Profile	GRADE	No.	Length	Area	Weight
Z8-CHQ040	CHQD5*1103.4	S235JR	1	3088	6.63	128.94
				Total	6.63	128.94

BOLT LIST:-

BOLT \ STUD	BOLT DESCRIPTION	QTY	FINISH
BOLT	B1N2W16 X 50 A325M	4	

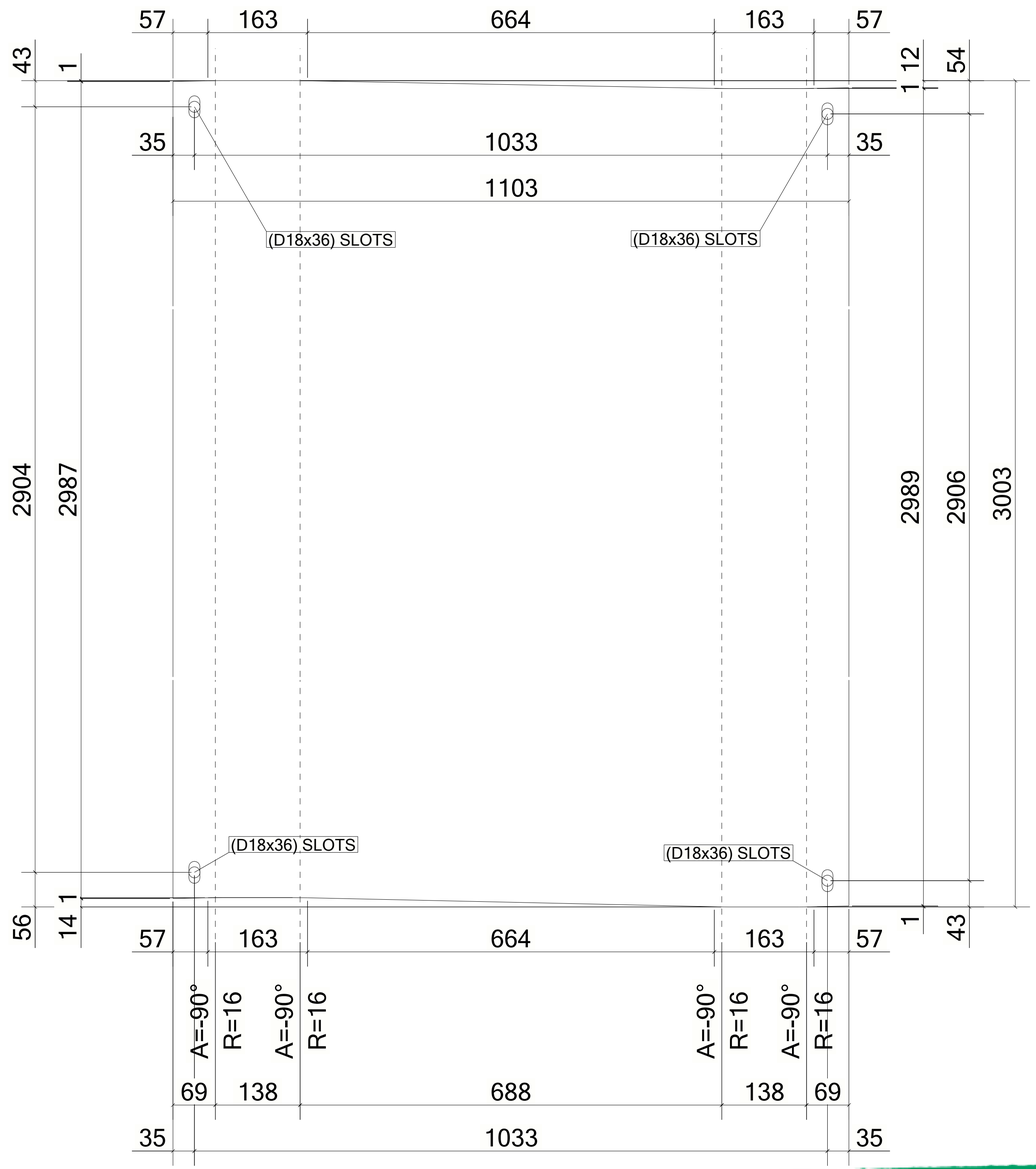

UNFOLDED VIEW

1 *REQUIRED AS DRAWN MARKED* **Z8-CHQ040**

6 October Monorail
Engineering Unit
Valid For Construction

GENERAL NOTES:

1. THE DIMENSIONS SHOWN ARE NOMINAL (IN MILLIMETERS), U.N.O.
2. WELD SIZESHALL BE AISC MINIMUM OF 6 mm UNLESS NOTED OTHERWISE.
3. ALL FIELD WELDS SHALL BE INSPECTED PER QUALITY ASSURANCE AND SPECIAL INSPECTIONS.

REFERENCE DRAWINGS

1	93M-BOA-NAT-LOT-04833
2	93M-BOA-NAT-LOT-09170
3	93M-BOA-NAT-LOT-01976
4	93M-BOA-NAT-LOT-20021
5	
6	
7	
8	
9	

6TH OF OCTOBER CITY RAIL TRANSIT MONORAIL

The Authority — Hill International Consultant — Main Contractor — Structural Designer

KEY PLAN:

SCALE	SHOPDRAWING	DATE
AS SHOWN		12/05/2023

REV	DATE	DSG.	CHK.	APP.	AMENDMENTS	STATUS
B	12/05/2023	M.KH	M.KH	DR.M.M	ISSUED FOR INFORMATION	IFI
A	11/20/2022	M.KH	M.KH	DR.M.M	ISSUED FOR INFORMATION	IFI

DRAWING TITLE
6TH OF OCTOBER MONORAIL
SERVICE WALKWAYS
ZONE (1008)
Z8-CHQ040

Project Code	Rubric	Initiator	Lot	Ref	Number	Revision
93M	047	6ACC	60DE	PDWG	0811	8 B

Tekla structures

Same comments as
93M-0476-ACC-60DEP-DWG-08079-B.

REVIEWED WITH COMMENT
MONORAILS PROJECT

MATERIAL LIST FOR ASSEMBLY MK'D **Z8-CHQ039**

Mark	Profile	GRADE	No.	Length	Area	Weight
Z8-CHQ039	CHQD5*1103.4	S235JR	1	2815	6.02	117.11
				Total	6.02	117.11

BOLT LIST:-

BOLT \ STUD	BOLT DESCRIPTION	QTY	FINISH
BOLT	B1N2W 16 X 50 A325M	4	

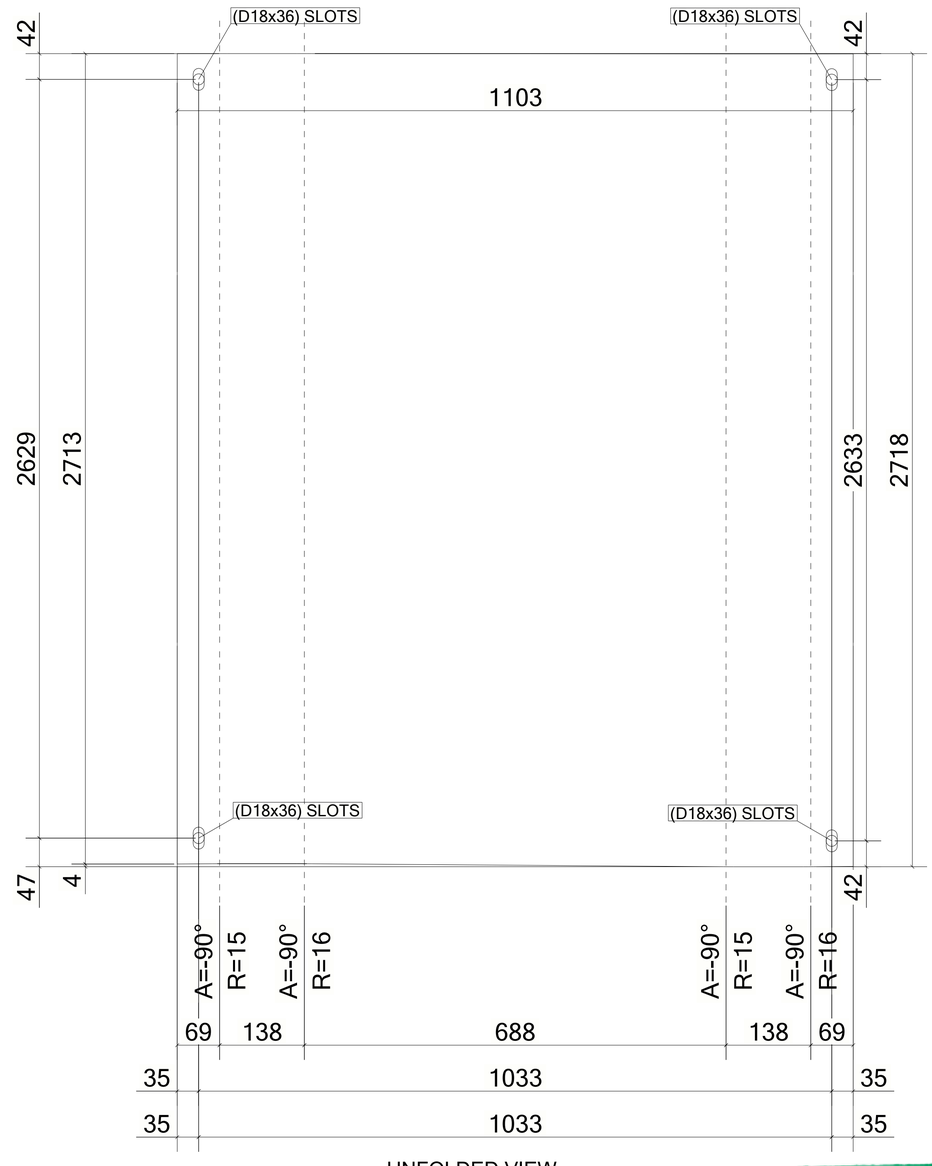

UNFOLDED VIEW

1 *REQUIRED AS DRAWN MARKED* **Z8-CHQ039**

6 October Monorail
Engineering Unit
Valid For Construction

GENERAL NOTES:

1. THE DIMENSIONS SHOWN ARE NOMINAL (IN MILLIMETERS), U.N.O.
2. WELD SIZESHALL BE AISC MINIMUM OF 6 mm UNLESS NOTED OTHERWISE.
3. ALL FIELD WELDS SHALL BE INSPECTED PER QUALITY ASSURANCE AND SPECIAL INSPECTIONS.

REFERENCE DRAWINGS

1	93M-BOA-NAT-LOT-04833
2	93M-BOA-NAT-LOT-09170
3	93M-BOA-NAT-LOT-01976
4	93M-BOA-NAT-LOT-20021
5	
6	
7	
8	
9	

6TH OF OCTOBER CITY RAIL TRANSIT MONORAIL

The Authority — Hill International Consultant — Main Contractor — Structural Designer

KEY PLAN:

SCALE: AS SHOWN | SHOPDRAWING | DATE: 12/05/2023

REV	DATE	DSG.	CHK.	APP.	AMENDMENTS	STATUS
B	12/05/2023	M.KH	M.KH	DR.M.M	ISSUED FOR INFORMATION	IFI
A	11/20/2022	M.KH	M.KH	DR.M.M	ISSUED FOR INFORMATION	IFI

DRAWING TITLE
6TH OF OCTOBER MONORAIL
SERVICE WALKWAYS
ZONE (1008)
Z8-CHQ039

Project Code	Rubric	Initiator	Lot	Ref	Number	Revision
93M	047	6ACC	60DEP	DWG	08117	B

Tekla structures

Same comments as
93M-0476-ACC-60DEP-DWG-08079-B.

REVIEWED WITH COMMENT
MONORAILS PROJECT

MATERIAL LIST FOR ASSEMBLY MK'D **Z8-CHQ038**

Mark	Profile	GRADE	No.	Length	Area	Weight
Z8-CHQ038	CHQD5*1103.4	S235JR	1	3094	6.64	129.12
				Total	6.64	129.12

BOLT LIST:-

BOLT \ STUD	BOLT DESCRIPTION	QTY	FINISH
BOLT	B1N2W16 X 50 A325M	4	

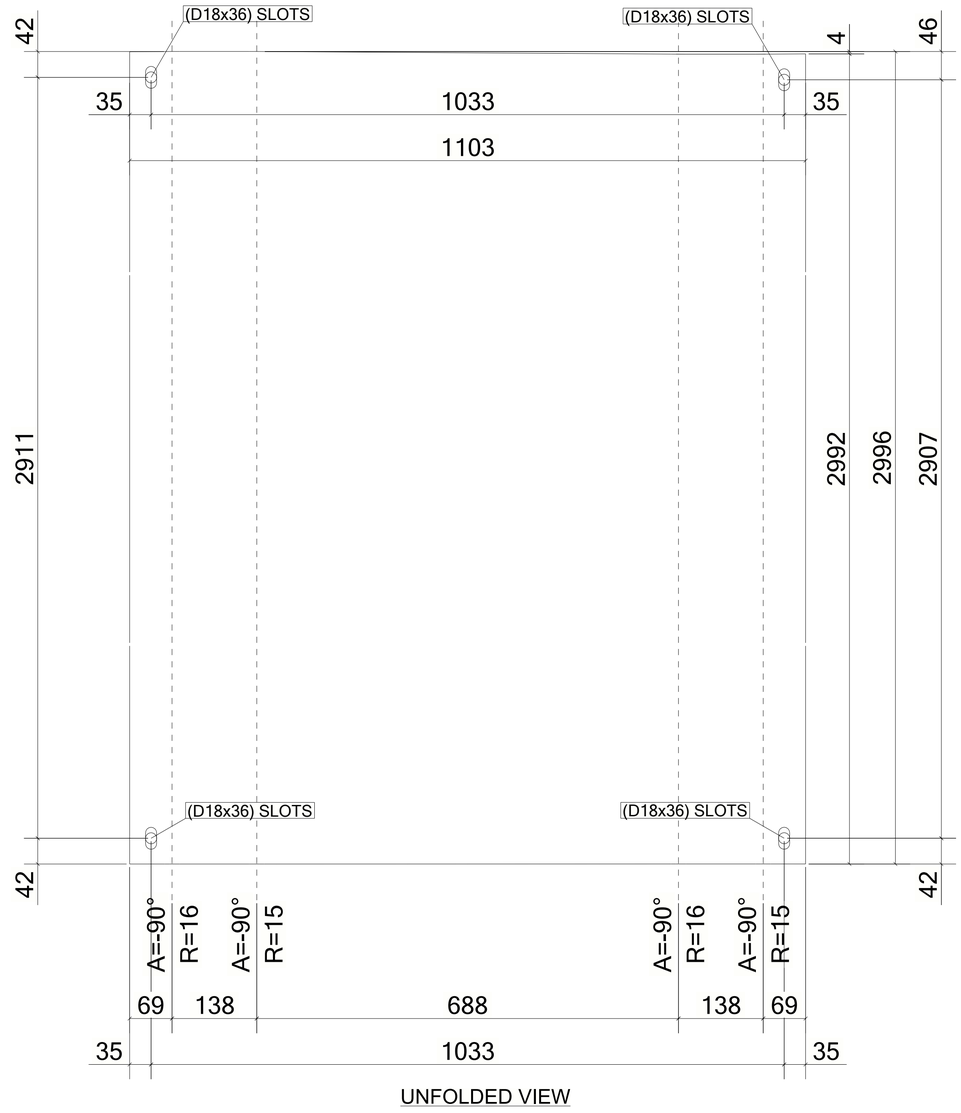

UNFOLDED VIEW

1 *REQUIRED AS DRAWN MARKED* **Z8-CHQ038**

6 October Monorail
Engineering Unit
Valid For Construction

GENERAL NOTES:

1. THE DIMENSIONS SHOWN ARE NOMINAL (IN MILLIMETERS), U.N.O.
2. WELD SIZESHALL BE AISC MINIMUM OF 6 mm UNLESS NOTED OTHERWISE.
3. ALL FIELD WELDS SHALL BE INSPECTED PER QUALITY ASSURANCE AND SPECIAL INSPECTIONS.

REFERENCE DRAWINGS

1	93M-BOA-NAT-LOT-04833
2	93M-BOA-NAT-LOT-09170
3	93M-BOA-NAT-LOT-01976
4	93M-BOA-NAT-LOT-20021
5	
6	
7	
8	
9	

6TH OF OCTOBER CITY RAIL TRANSIT MONORAIL

The Authority | Consultant: Hill International | Main Contractor: ORASCOM CONSTRUCTION / BOMBARDIER | Structural Designer: INNOVA TRANSPORTATION

KEY PLAN:

SCALE: AS SHOWN | SHOPDRAWING | DATE: 12/05/2023

REV	DATE	DSG.	CHK.	APP.	AMENDMENTS	STATUS
B	12/05/2023	M.KH	M.KH	DR.M.M	ISSUED FOR INFORMATION	IFI
A	11/20/2022	M.KH	M.KH	DR.M.M	ISSUED FOR INFORMATION	IFI

DRAWING TITLE
6TH OF OCTOBER MONORAIL
SERVICE WALKWAYS
ZONE (1008)
Z8-CHQ038

Project Code	Rubric	Initiator	Lot	Ref	Number	Revision
93	M047	6ACC	60DE	PDWG	0811	6 B

Tekla structures

Same comments as
93M-0476-ACC-60DEP-DWG-08079-B.

REVIEWED WITH COMMENT
MONORAILS PROJECT

MATERIAL LIST FOR ASSEMBLY MK'D **Z8-CHQ037**

Mark	Profile	GRADE	No.	Length	Area	Weight
Z8-CHQ037	CHQD5*1103.4	S235JR	1	2087	4.41	85.72
				Total	4.41	85.72

BOLT LIST:-

BOLT \ STUD	BOLT DESCRIPTION		QTY	FINISH
BOLT	B1N2W16 X 50	A325M	4	

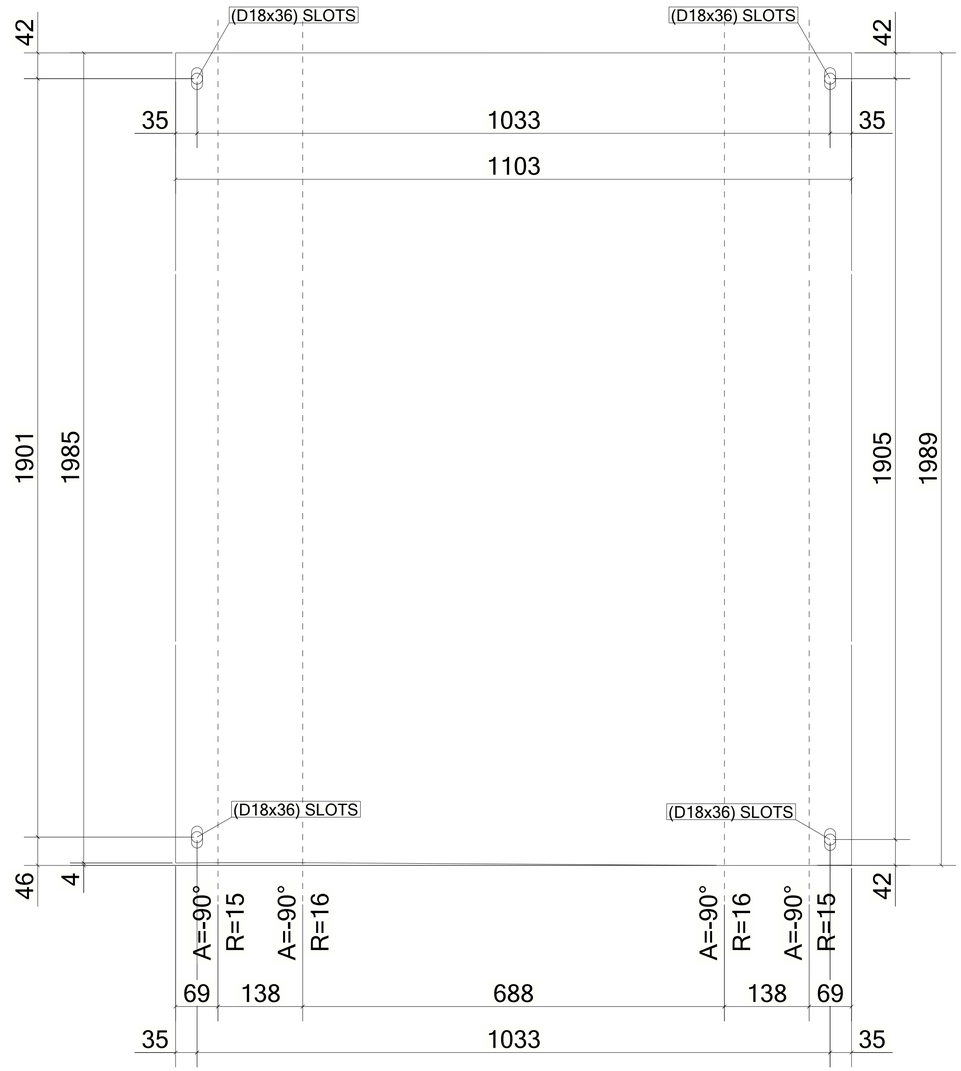

UNFOLDED VIEW

1 *REQUIRED AS DRAWN MARKED* **Z8-CHQ037**

6 October Monorail
Engineering Unit
Valid For Construction

GENERAL NOTES:

1. THE DIMENSIONS SHOWN ARE NOMINAL (IN MILLIMETERS), U.N.O.
2. WELD SIZESHALL BE AISC MINIMUM OF 6 mm UNLESS NOTED OTHERWISE.
3. ALL FIELD WELDS SHALL BE INSPECTED PER QUALITY ASSURANCE AND SPECIAL INSPECTIONS.

REFERENCE DRAWINGS

1	93M-BOA-NAT-LOT-04833
2	93M-BOA-NAT-LOT-09170
3	93M-BOA-NAT-LOT-01976
4	93M-BOA-NAT-LOT-20021
5	
6	
7	
8	
9	

6TH OF OCTOBER CITY RAIL TRANSIT MONORAIL

The Authority | Consultant | Main Contractor | Structural Designer

KEY PLAN:

SCALE: AS SHOWN | SHOPDRAWING | DATE: 12/05/2023

REV	DATE	DSG.	CHK.	APP.	AMENDMENTS	STATUS
B	12/05/2023	M.KH	M.KH	DR.M.M	ISSUED FOR INFORMATION	IFI
A	11/20/2022	M.KH	M.KH	DR.M.M	ISSUED FOR INFORMATION	IFI

DRAWING TITLE
6TH OF OCTOBER MONORAIL
SERVICE WALKWAYS
ZONE (1008)
Z8-CHQ037

Project Code	Rubric	Initiator	Lot	Ref	Number	Revision
93M	0476	ACC	60DEP	DWG	08115	B

Tekla structures

Same comments as 93M-0476-ACC-60DEP-DWG-08079-B.

REVIEWED WITH COMMENT
MONORAILS PROJECT

MATERIAL LIST FOR ASSEMBLY MK'D **Z8-CHQ036**

Mark	Profile	GRADE	No.	Length	Area	Weight
Z8-CHQ036	CHQD5*1103.4	S235JR	1	2088	4.41	85.74
				Total	4.41	85.74

BOLT LIST:-

BOLT \ STUD	BOLT DESCRIPTION	QTY	FINISH
BOLT	B1N2W 16 X 50 A325M	4	

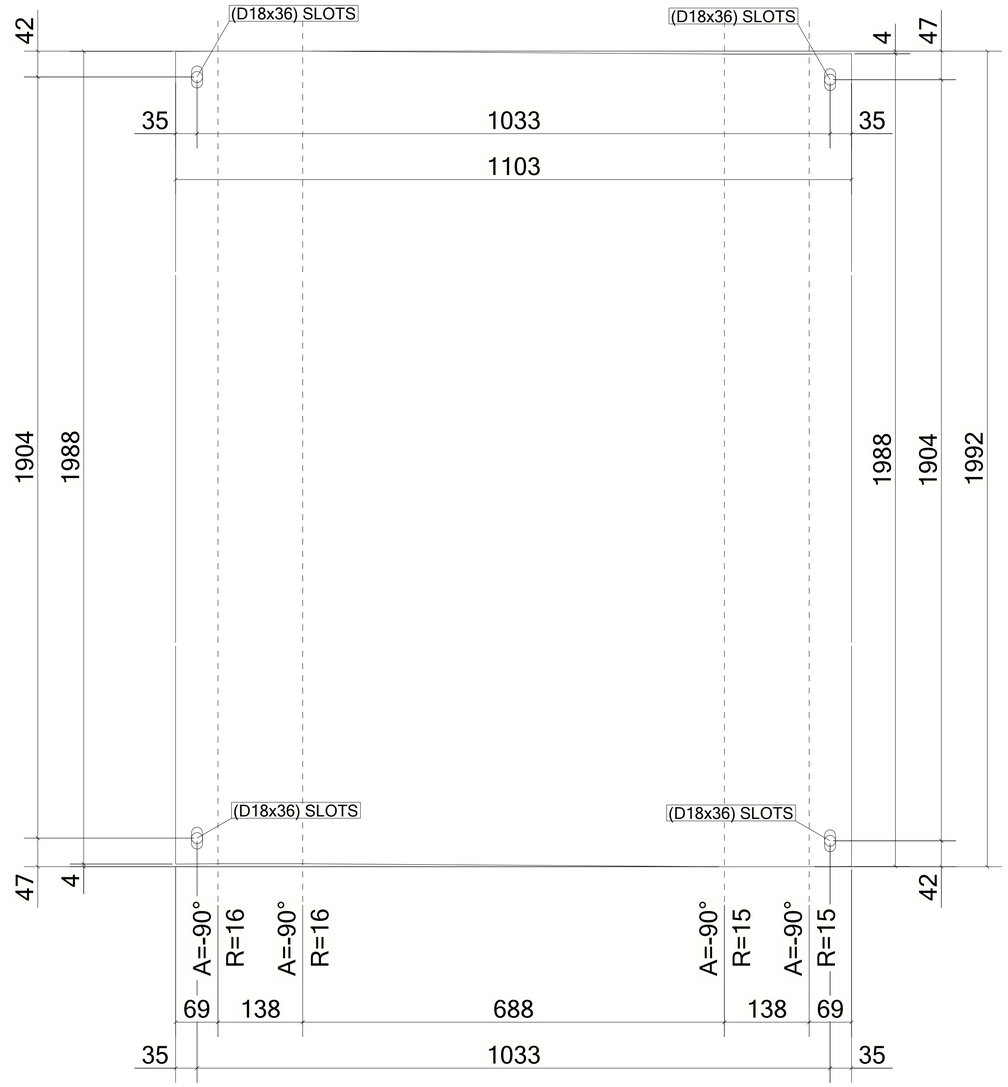

UNFOLDED VIEW

1 *REQUIRED AS DRAWN MARKED* **Z8-CHQ036**

6 October Monorail
Engineering Unit
Valid For Construction

GENERAL NOTES:

1. THE DIMENSIONS SHOWN ARE NOMINAL (IN MILLIMETERS), U.N.O.
2. WELD SIZESHALL BE AISC MINIMUM OF 6 mm UNLESS NOTED OTHERWISE.
3. ALL FIELD WELDS SHALL BE INSPECTED PER QUALITY ASSURANCE AND SPECIAL INSPECTIONS.

REFERENCE DRAWINGS

1	93M-BOA-NAT-LOT-04833
2	93M-BOA-NAT-LOT-09170
3	93M-BOA-NAT-LOT-01976
4	93M-BOA-NAT-LOT-20021
5	
6	
7	
8	
9	

6TH OF OCTOBER CITY RAIL TRANSIT MONORAIL

The Authority | Hill International Consultant | Main Contractor | Structural Designer

KEY PLAN:

SCALE	SHOPDRAWING	DATE
AS SHOWN		12/05/2023

REV	DATE	DSG.	CHK.	APP.	AMENDMENTS	STATUS
B	12/05/2023	M.KH	M.KH	DR.M.M	ISSUED FOR INFORMATION	IFI
A	11/20/2022	M.KH	M.KH	DR.M.M	ISSUED FOR INFORMATION	IFI

DRAWING TITLE
6TH OF OCTOBER MONORAIL
SERVICE WALKWAYS
ZONE (1008)
Z8-CHQ036

Project Code	Rubric	Initiator	Lot	Ref	Number	Revision
93M	047	6ACC	60DE	PDWG	0811	4 B

Tekla structures

Same comments as 93M-0476-ACC-60DEP-DWG-08079-B.

REVIEWED WITH COMMENT
MONORAILS PROJECT

MATERIAL LIST FOR ASSEMBLY MK'D **Z8-CHQ035**

Mark	Profile	GRADE	No.	Length	Area	Weight
Z8-CHQ035	CHQD5*1103.4	S235JR	1	2093	4.42	85.97
				Total	4.42	85.97

BOLT LIST:-

BOLT \ STUD	BOLT DESCRIPTION	QTY	FINISH
BOLT	B1N2W16 X 50 A325M	4	

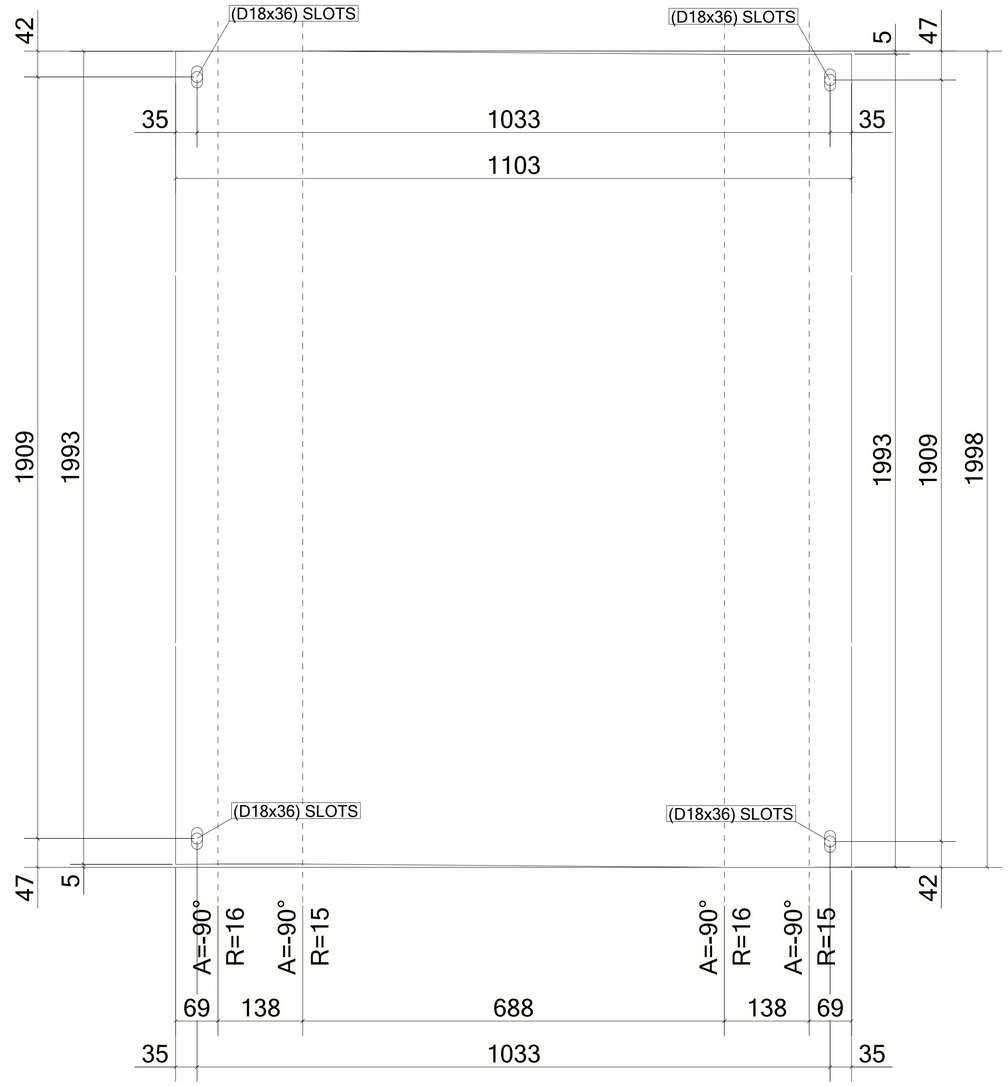

UNFOLDED VIEW

1 *REQUIRED AS DRAWN MARKED* **Z8-CHQ035**

6 October Monorail
Engineering Unit
Valid For Construction

GENERAL NOTES:

1. THE DIMENSIONS SHOWN ARE NOMINAL (IN MILLIMETERS), U.N.O.
2. WELD SIZESHALL BE AISC MINIMUM OF 6 mm UNLESS NOTED OTHERWISE.
3. ALL FIELD WELDS SHALL BE INSPECTED PER QUALITY ASSURANCE AND SPECIAL INSPECTIONS.

REFERENCE DRAWINGS

1	93M-BOA-NAT-LOT-04833
2	93M-BOA-NAT-LOT-09170
3	93M-BOA-NAT-LOT-01976
4	93M-BOA-NAT-LOT-20021
5	
6	
7	
8	
9	

6TH OF OCTOBER CITY RAIL TRANSIT MONORAIL

The Authority — Consultant — Main Contractor — Structural Designer

KEY PLAN:

SCALE: AS SHOWN | SHOPDRAWING | DATE: 12/05/2023

REV	DATE	DSG.	CHK.	APP.	AMENDMENTS	STATUS
B	12/05/2023	M.KH	M.KH	DR.M.M	ISSUED FOR INFORMATION	IFI
A	11/20/2022	M.KH	M.KH	DR.M.M	ISSUED FOR INFORMATION	IFI

DRAWING TITLE
6TH OF OCTOBER MONORAIL
SERVICE WALKWAYS
ZONE (1008)
Z8-CHQ035

Project Code	Rubric	Initiator	Lot	Ref	Number	Revision
93M	047	6ACC	60DE	PDWG	0811	3 B

Tekla structures

Same comments as
93M-0476-ACC-60DEP-DWG-08079-B.

REVIEWED WITH COMMENT
MONORAILS PROJECT

MATERIAL LIST FOR ASSEMBLY MK'D **Z8-CHQ034**

Mark	Profile	GRADE	No.	Length	Area	Weight
Z8-CHQ034	CHQD5*1103.4	S235JR	1	3089	6.63	128.94
				Total	6.63	128.94

BOLT LIST:-

BOLT \ STUD	BOLT DESCRIPTION	QTY	FINISH
BOLT	B1N2W16 X 50 A325M	4	

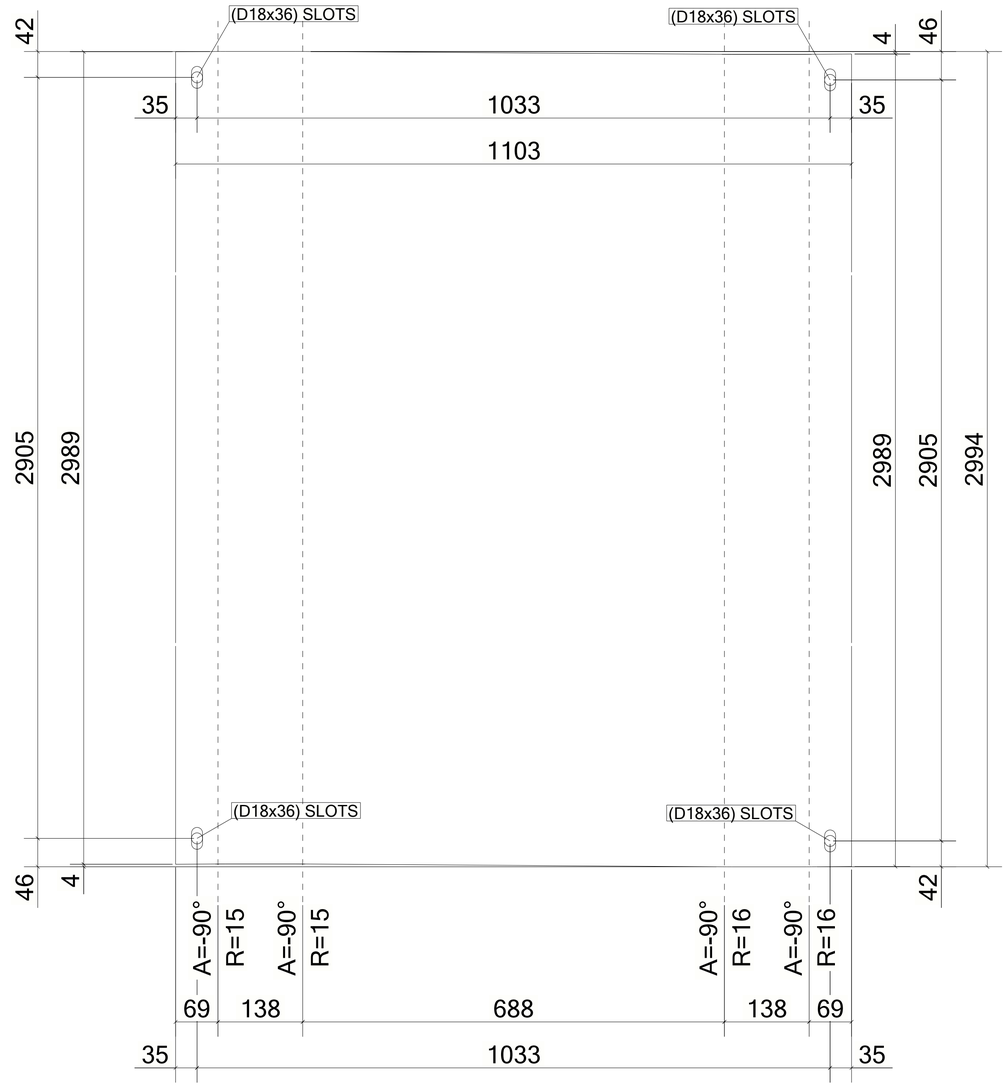

UNFOLDED VIEW

1 *REQUIRED AS DRAWN MARKED* **Z8-CHQ034**

6 October Monorail
Engineering Unit
Valid For Construction

GENERAL NOTES:

1. THE DIMENSIONS SHOWN ARE NOMINAL (IN MILLIMETERS), U.N.O.
2. WELD SIZESHALL BE AISC MINIMUM OF 6 mm UNLESS NOTED OTHERWISE.
3. ALL FIELD WELDS SHALL BE INSPECTED PER QUALITY ASSURANCE AND SPECIAL INSPECTIONS.

REFERENCE DRAWINGS

1	93M-BOA-NAT-LOT-04833
2	93M-BOA-NAT-LOT-09170
3	93M-BOA-NAT-LOT-01976
4	93M-BOA-NAT-LOT-20021
5	
6	
7	
8	
9	

6TH OF OCTOBER CITY RAIL TRANSIT MONORAIL

The Authority | Consultant: Hill International | Main Contractor: ORASCOM CONSTRUCTION / BOMBARDIER | Structural Designer: INNOVA TRANSPORTATION

KEY PLAN:

SCALE	SHOPDRAWING	DATE
AS SHOWN		12/05/2023

REV	DATE	DSG.	CHK.	APP.	AMENDMENTS	STATUS
B	12/05/2023	M.KH	M.KH	DR.M.M	ISSUED FOR INFORMATION	IFI
A	11/20/2022	M.KH	M.KH	DR.M.M	ISSUED FOR INFORMATION	IFI

DRAWING TITLE
6TH OF OCTOBER MONORAIL
SERVICE WALKWAYS
ZONE (1008)
Z8-CHQ034

Project Code	Rubric	Initiator	Lot	Ref	Number	Revision
93M	047	6ACC	60DEP	DWG	08112	B

Tekla structures

Same comments as
93M-0476-ACC-60DEP-DWG-08079-B.

REVIEWED WITH COMMENT
MONORAILS PROJECT

MATERIAL LIST FOR ASSEMBLY MK'D **Z8-CHQ033**

Mark	Profile	GRADE	No.	Length	Area	Weight
Z8-CHQ033	CHQD5*1103.4	S235JR	1	3088	6.63	128.89
				Total	6.63	128.89

BOLT LIST:-

BOLT \ STUD	BOLT DESCRIPTION	QTY	FINISH
BOLT	B1N2W16 X 50 A325M	4	

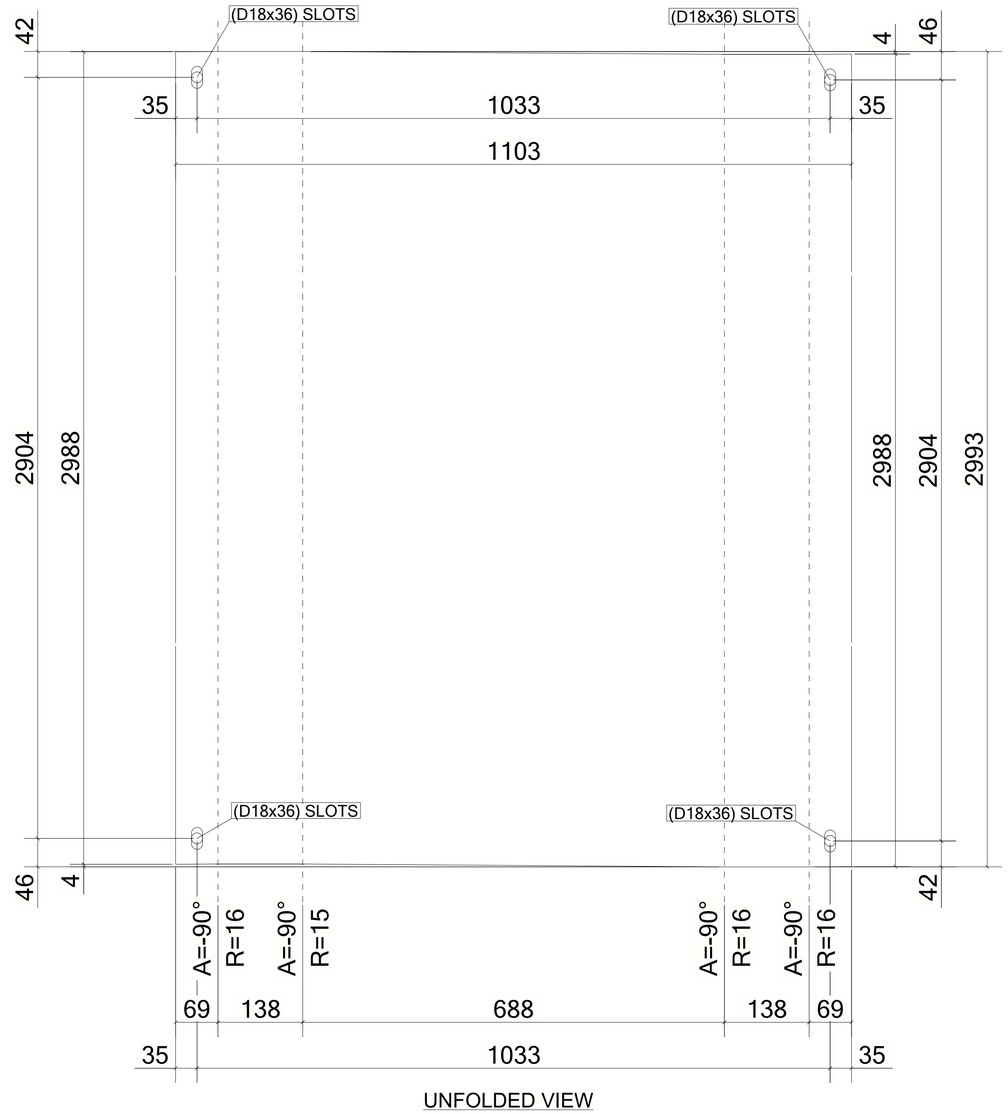

UNFOLDED VIEW

2 *REQUIRED AS DRAWN MARKED* **Z8-CHQ033**

6 October Monorail
Engineering Unit
Valid For Construction

GENERAL NOTES:

1. THE DIMENSIONS SHOWN ARE NOMINAL (IN MILLIMETERS), U.N.O.
2. WELD SIZESHALL BE AISC MINIMUM OF 6 mm UNLESS NOTED OTHERWISE.
3. ALL FIELD WELDS SHALL BE INSPECTED PER QUALITY ASSURANCE AND SPECIAL INSPECTIONS.

REFERENCE DRAWINGS

1	93M-BOA-NAT-LOT-04833
2	93M-BOA-NAT-LOT-09170
3	93M-BOA-NAT-LOT-01976
4	93M-BOA-NAT-LOT-20021
5	
6	
7	
8	
9	

6TH OF OCTOBER CITY RAIL TRANSIT MONORAIL

The Authority | Hill International Consultant | Main Contractor | Structural Designer

KEY PLAN:

SCALE: AS SHOWN | SHOPDRAWING | DATE: 12/05/2023

REV	DATE	DSG.	CHK.	APP.	AMENDMENTS	STATUS
B	12/05/2023	M.KH	M.KH	DR.M.M	ISSUED FOR INFORMATION	IFI
A	11/20/2022	M.KH	M.KH	DR.M.M	ISSUED FOR INFORMATION	IFI

DRAWING TITLE
6TH OF OCTOBER MONORAIL
SERVICE WALKWAYS
ZONE (1008)
Z8-CHQ033

Project Code	Rubric	Initiator	Lot	Ref	Number	Revision
93	M047	6ACC	60DE	PDWG	0811	1 B

Tekla structures

Same comments as
93M-0476-ACC-60DEP-DWG-08079-B.

REVIEWED WITH COMMENT
MONORAILS PROJECT

MATERIAL LIST FOR ASSEMBLY MK'D **Z8-CHQ032**

Mark	Profile	GRADE	No.	Length	Area	Weight
Z8-CHQ032	CHQD5*1103.4	S235JR	1	3092	6.64	129.08
				Total	6.64	129.08

BOLT LIST:-

BOLT \ STUD	BOLT DESCRIPTION	QTY	FINISH
BOLT	B1N2W16 X 50 A325M	4	

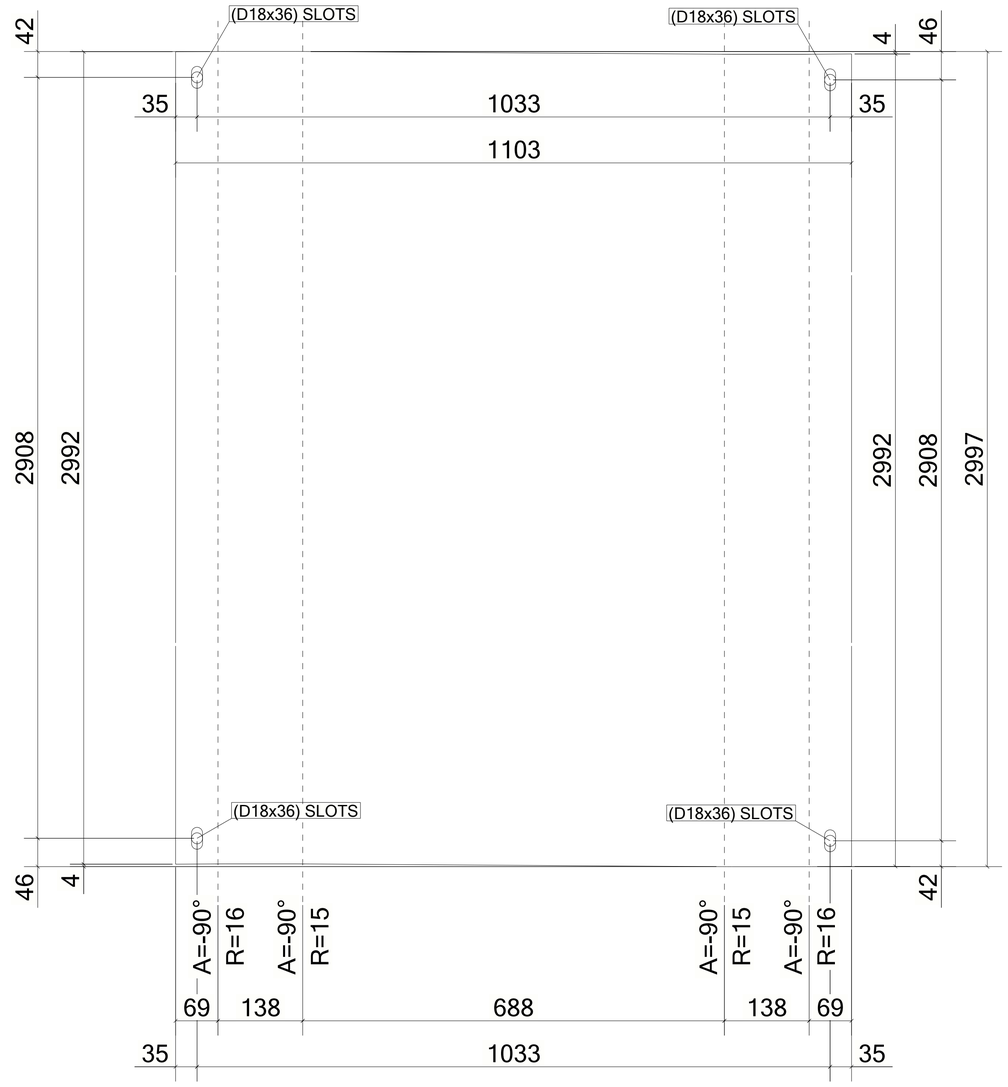

UNFOLDED VIEW

3 *REQUIRED AS DRAWN MARKED* **Z8-CHQ032**

6 October Monorail
Engineering Unit
Valid For Construction

GENERAL NOTES:

1. THE DIMENSIONS SHOWN ARE NOMINAL (IN MILLIMETERS), U.N.O.
2. WELD SIZESHALL BE AISC MINIMUM OF 6 mm UNLESS NOTED OTHERWISE.
3. ALL FIELD WELDS SHALL BE INSPECTED PER QUALITY ASSURANCE AND SPECIAL INSPECTIONS.

REFERENCE DRAWINGS

1	93M-BOA-NAT-LOT-04833
2	93M-BOA-NAT-LOT-09170
3	93M-BOA-NAT-LOT-01976
4	93M-BOA-NAT-LOT-20021
5	
6	
7	
8	
9	

6TH OF OCTOBER CITY RAIL TRANSIT MONORAIL

The Authority — Consultant: Hill International — Main Contractor: ORASCOM / BOMBARDIER — Structural Designer: INNOVA

KEY PLAN:

SCALE	SHOPDRAWING	DATE
AS SHOWN		12/05/2023

REV	DATE	DSG.	CHK.	APP.	AMENDMENTS	STATUS
B	12/05/2023	M.KH	M.KH	DR.M.M	ISSUED FOR INFORMATION	IFI
A	11/20/2022	M.KH	M.KH	DR.M.M	ISSUED FOR INFORMATION	IFI

DRAWING TITLE
6TH OF OCTOBER MONORAIL
SERVICE WALKWAYS
ZONE (1008)
Z8-CHQ032

Project Code	Rubric	Initiator	Lot	Ref	Number	Revision
93	M047	6ACC	60DE	PDWG	0811	0 B

Tekla structures

Same comments as
93M-0476-ACC-60DEP-DWG-08079-B.

REVIEWED WITH COMMENT
MONORAILS PROJECT

MATERIAL LIST FOR ASSEMBLY MK'D **Z8-CHQ031**

Mark	Profile	GRADE	No.	Length	Area	Weight
Z8-CHQ031	CHQD5*1103.4	S235JR	1	3087	6.63	128.85
				Total	6.63	128.85

BOLT LIST:-

BOLT \ STUD	BOLT DESCRIPTION		QTY	FINISH
BOLT	B1N2W16 X 40	A325M	2	
BOLT	B1N2W16 X 50	A325M	2	

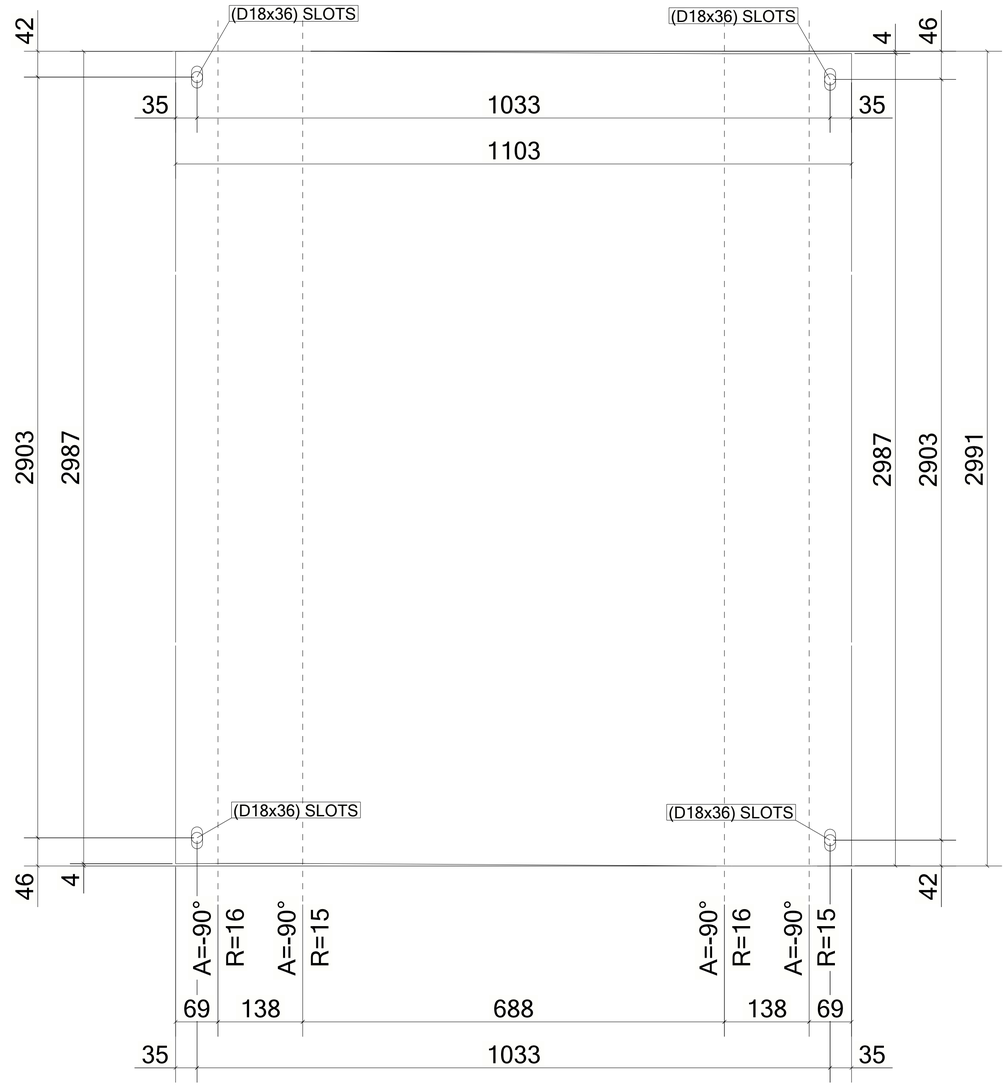

UNFOLDED VIEW

6 October Monorail
Engineering Unit
Valid For Construction

2 *REQUIRED AS DRAWN MARKED* **Z8-CHQ031**

GENERAL NOTES:

1. THE DIMENSIONS SHOWN ARE NOMINAL (IN MILLIMETERS), U.N.O.
2. WELD SIZESHALL BE AISC MINIMUM OF 6 mm UNLESS NOTED OTHERWISE.
3. ALL FIELD WELDS SHALL BE INSPECTED PER QUALITY ASSURANCE AND SPECIAL INSPECTIONS.

REFERENCE DRAWINGS

1	93M-BOA-NAT-LOT-04833
2	93M-BOA-NAT-LOT-09170
3	93M-BOA-NAT-LOT-01976
4	93M-BOA-NAT-LOT-20021
5	
6	
7	
8	
9	

6TH OF OCTOBER CITY RAIL TRANSIT MONORAIL

The Authority | Hill International Consultant | Main Contractor | Structural Designer

KEY PLAN:

SCALE: AS SHOWN | SHOPDRAWING | DATE: 12/05/2023

REV	DATE	DSG.	CHK.	APP.	AMENDMENTS	STATUS
B	12/05/2023	M.KH	M.KH	DR.M.M	ISSUED FOR INFORMATION	IFI
A	11/20/2022	M.KH	M.KH	DR.M.M	ISSUED FOR INFORMATION	IFI

DRAWING TITLE
6TH OF OCTOBER MONORAIL
SERVICE WALKWAYS
ZONE (1008)
Z8-CHQ031

Project Code	Rubric	Initiator	Lot	Ref	Number	Revision
93	M047	6ACC	60DE	PDWG	0810	B

Tekla structures

Same comments as
93M-0476-ACC-60DEP-DWG-08079-B.

REVIEWED WITH COMMENT
MONORAILS PROJECT

MATERIAL LIST FOR ASSEMBLY MK'D **Z8-CHQ030**

Mark	Profile	GRADE	No.	Length	Area	Weight
Z8-CHQ030	CHQD5*1103.4	S235JR	1	3090	6.63	128.97
				Total	6.63	128.97

BOLT LIST:-

BOLT \ STUD	BOLT DESCRIPTION	QTY	FINISH
BOLT	B1N2W16 X 50 A325M	4	

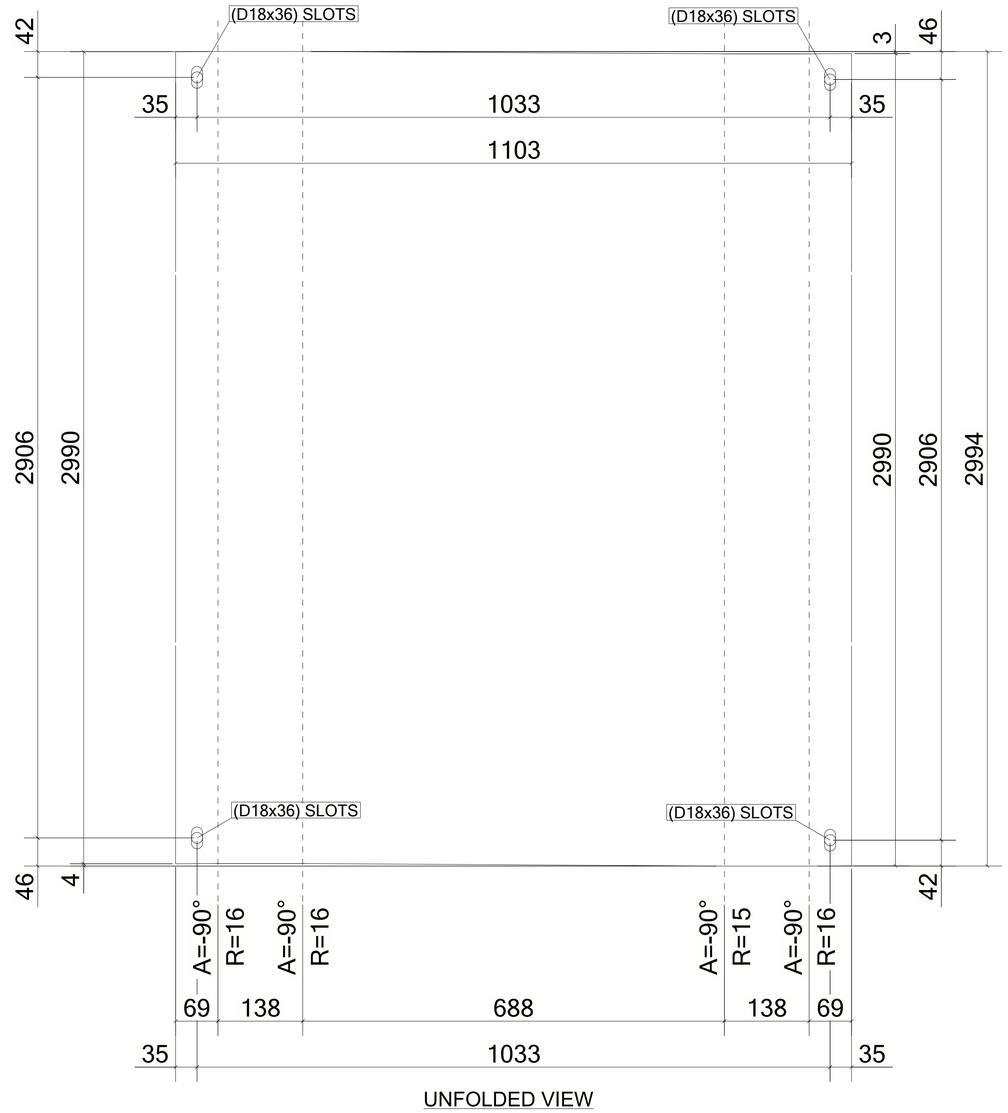

UNFOLDED VIEW

1 *REQUIRED AS DRAWN MARKED* **Z8-CHQ030**

6 October: Monorail
Engineering Unit
Valid For Construction

GENERAL NOTES:

1. THE DIMENSIONS SHOWN ARE NOMINAL (IN MILLIMETERS), U.N.O.
2. WELD SIZESHALL BE AISC MINIMUM OF 6 mm UNLESS NOTED OTHERWISE.
3. ALL FIELD WELDS SHALL BE INSPECTED PER QUALITY ASSURANCE AND SPECIAL INSPECTIONS.

REFERENCE DRAWINGS

1	93M-BOA-NAT-LOT-04833
2	93M-BOA-NAT-LOT-09170
3	93M-BOA-NAT-LOT-01976
4	93M-BOA-NAT-LOT-20021
5	
6	
7	
8	
9	

6TH OF OCTOBER CITY RAIL TRANSIT MONORAIL

The Authority — Hill International Consultant — Main Contractor — Structural Designer

KEY PLAN:

SCALE	SHOPDRAWING	DATE
AS SHOWN		12/05/2023

REV	DATE	DSG.	CHK.	APP.	AMENDMENTS	STATUS
B	12/05/2023	M.KH	M.KH	DR.M.M	ISSUED FOR INFORMATION	IFI
A	11/20/2022	M.KH	M.KH	DR.M.M	ISSUED FOR INFORMATION	IFI

DRAWING TITLE
6TH OF OCTOBER MONORAIL
SERVICE WALKWAYS
ZONE (1008)
Z8-CHQ030

Project Code	Rubric	Initiator	Lot	Ref	Number	Revision
93	M047	6ACC	60DE	PDWG	0810	B

Tekla structures

Same comments as
93M-0476-ACC-60DEP-DWG-08079-B.

REVIEWED WITH COMMENT
MONORAILS PROJECT

MATERIAL LIST FOR ASSEMBLY MK'D **Z8-CHQ029**

Mark	Profile	GRADE	No.	Length	Area	Weight
Z8-CHQ029	CHQD5*1103.4	S235JR	1	3087	6.63	128.85
				Total	6.63	128.85

BOLT LIST:-

BOLT \ STUD	BOLT DESCRIPTION	QTY	FINISH
BOLT	B1N2W 16 X 50 A325M	4	

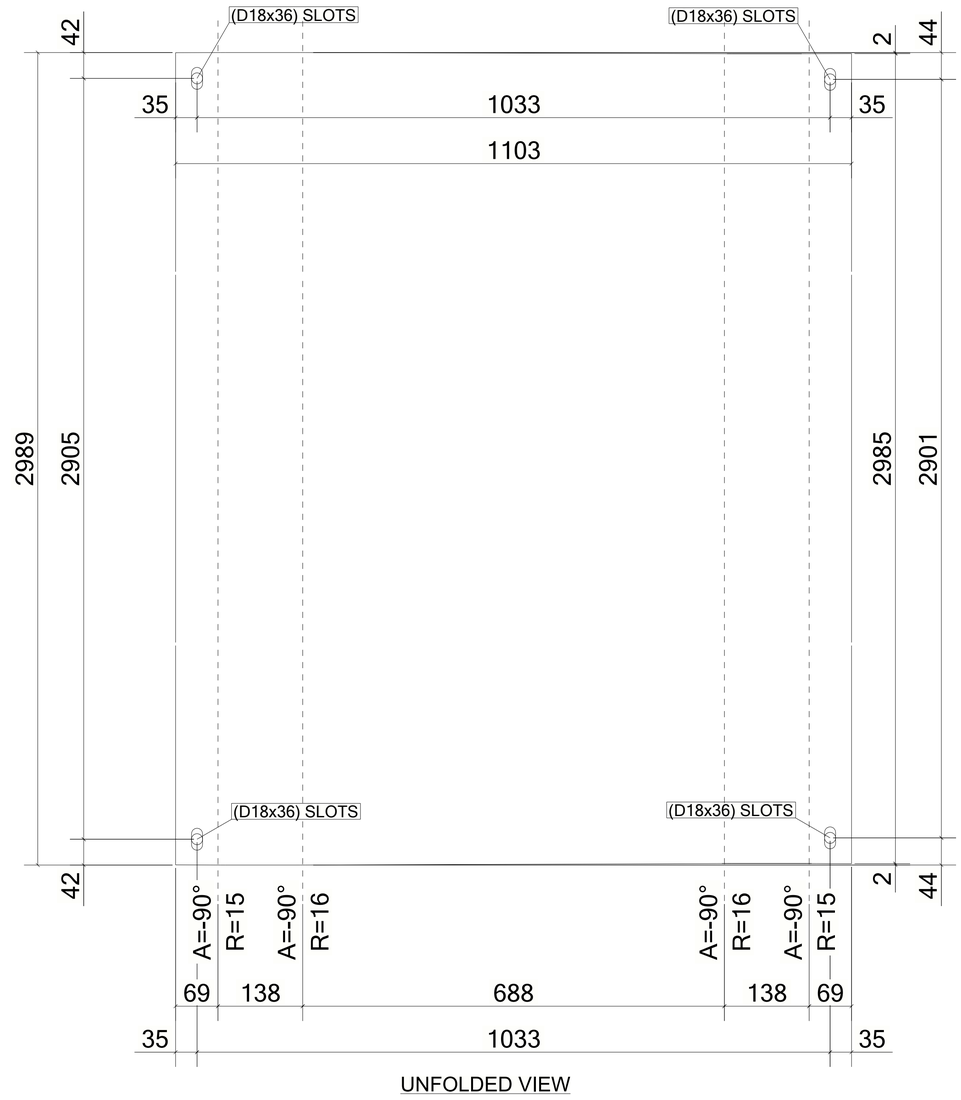

UNFOLDED VIEW

1 *REQUIRED AS DRAWN MARKED* **Z8-CHQ029**

6 October Monorail
Engineering Unit
Valid For Construction

GENERAL NOTES:

1. THE DIMENSIONS SHOWN ARE NOMINAL (IN MILLIMETERS), U.N.O.
2. WELD SIZESHALL BE AISC MINIMUM OF 6 mm UNLESS NOTED OTHERWISE.
3. ALL FIELD WELDS SHALL BE INSPECTED PER QUALITY ASSURANCE AND SPECIAL INSPECTIONS.

REFERENCE DRAWINGS

1	93M-BOA-NAT-LOT-04833
2	93M-BOA-NAT-LOT-09170
3	93M-BOA-NAT-LOT-01976
4	93M-BOA-NAT-LOT-20021
5	
6	
7	
8	
9	

6TH OF OCTOBER CITY RAIL TRANSIT MONORAIL

The Authority | Consultant: Hill International | Main Contractor: ORASCOM CONSTRUCTION, BOMBARDIER | Structural Designer: INNOVA TRANSPORTATION

KEY PLAN:

SCALE	SHOPDRAWING	DATE
AS SHOWN		12/05/2023

REV	DATE	DSG.	CHK.	APP.	AMENDMENTS	STATUS
B	12/05/2023	M.KH	M.KH	DR.M.M	ISSUED FOR INFORMATION	IFI
A	11/20/2022	M.KH	M.KH	DR.M.M	ISSUED FOR INFORMATION	IFI

DRAWING TITLE
6TH OF OCTOBER MONORAIL
SERVICE WALKWAYS
ZONE (1008)
Z8-CHQ029

Project Code	Rubric	Initiator	Lot	Ref	Number	Revision
93M	047	6ACC	60DEP	DWG	08107	B

Tekla structures

Same comments as 93M-0476-ACC-60DEP-DWG-08079-B.

REVIEWED WITH COMMENT
MONORAILS PROJECT

MATERIAL LIST FOR ASSEMBLY MK'D **Z8-CHQ028**

Mark	Profile	GRADE	No.	Length	Area	Weight
Z8-CHQ028	CHQD5*1103.4	S235JR	1	2196	4.65	90.40
				Total	4.65	90.40

BOLT LIST:-

BOLT \ STUD	BOLT DESCRIPTION	QTY	FINISH
BOLT	B1N2W16 X 50 A325M	4	

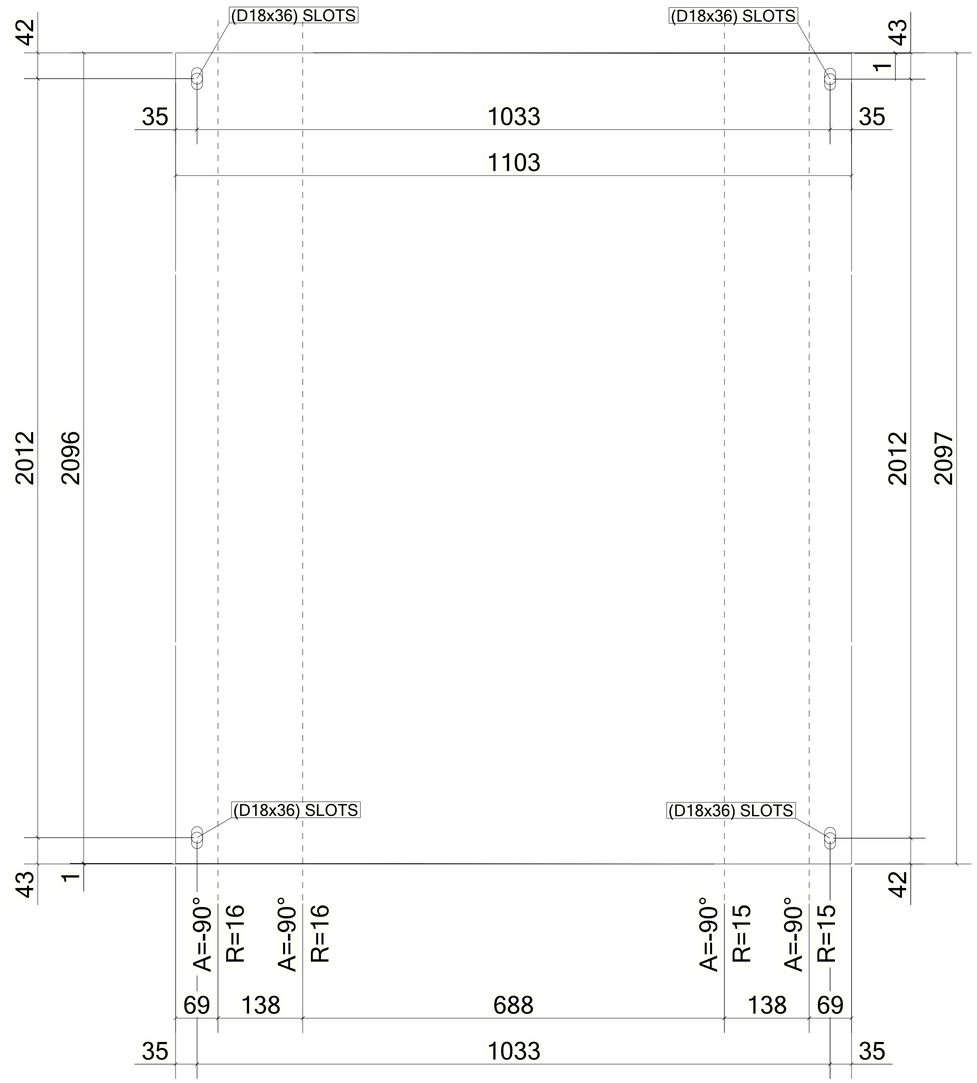

UNFOLDED VIEW

1 *REQUIRED AS DRAWN MARKED* **Z8-CHQ028**

6 October Monorail
Engineering Unit
Valid For Construction

GENERAL NOTES:

1. THE DIMENSIONS SHOWN ARE NOMINAL (IN MILLIMETERS), U.N.O.
2. WELD SIZESHALL BE AISC MINIMUM OF 6 mm UNLESS NOTED OTHERWISE.
3. ALL FIELD WELDS SHALL BE INSPECTED PER QUALITY ASSURANCE AND SPECIAL INSPECTIONS.

REFERENCE DRAWINGS

1	93M-BOA-NAT-LOT-04833
2	93M-BOA-NAT-LOT-09170
3	93M-BOA-NAT-LOT-01976
4	93M-BOA-NAT-LOT-20021
5	
6	
7	
8	
9	

6TH OF OCTOBER CITY RAIL TRANSIT MONORAIL

The Authority | Hill International Consultant | Main Contractor | Structural Designer

KEY PLAN:

SCALE	SHOPDRAWING	DATE
AS SHOWN		12/05/2023

REV	DATE	DSG.	CHK.	APP.	AMENDMENTS	STATUS
B	12/05/2023	M.KH	M.KH	DR.M.M	ISSUED FOR INFORMATION	IFI
A	11/20/2022	M.KH	M.KH	DR.M.M	ISSUED FOR INFORMATION	IFI

DRAWING TITLE
6TH OF OCTOBER MONORAIL
SERVICE WALKWAYS
ZONE (1008)
Z8-CHQ028

Project Code	Rubric	Initiator	Lot	Ref	Number	Revision
93M	0476	ACC	60DEP	DWG	08106	B

Tekla structures

Same comments as
93M-0476-ACC-60DEP-DWG-08079-B.

REVIEWED WITH COMMENT
MONORAILS PROJECT

MATERIAL LIST FOR ASSEMBLY MK'D **Z8-CHQ027**

Mark	Profile	GRADE	No.	Length	Area	Weight
Z8-CHQ027	CHQD5*1103.4	S235JR	1	2622	5.59	108.76
				Total	5.59	108.76

BOLT LIST:-

BOLT \ STUD	BOLT DESCRIPTION	QTY	FINISH
BOLT	B1N2W16 X 50 A325M	4	

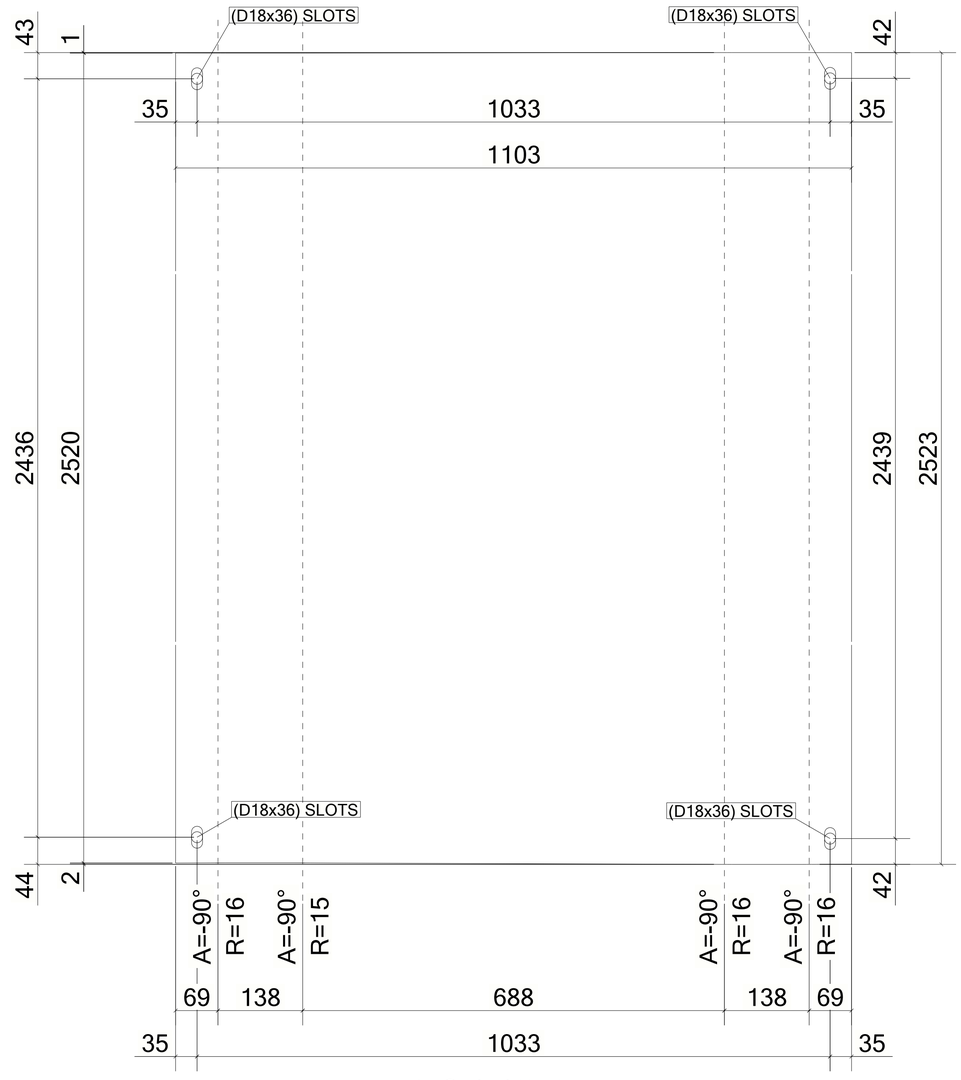

UNFOLDED VIEW

1 *REQUIRED AS DRAWN MARKED* **Z8-CHQ027**

6 October Monorail
Engineering Unit
Valid For Construction

GENERAL NOTES:

1. THE DIMENSIONS SHOWN ARE NOMINAL (IN MILLIMETERS), U.N.O.
2. WELD SIZESHALL BE AISC MINIMUM OF 6 mm UNLESS NOTED OTHERWISE.
3. ALL FIELD WELDS SHALL BE INSPECTED PER QUALITY ASSURANCE AND SPECIAL INSPECTIONS.

REFERENCE DRAWINGS

1	93M-BOA-NAT-LOT-04833
2	93M-BOA-NAT-LOT-09170
3	93M-BOA-NAT-LOT-01976
4	93M-BOA-NAT-LOT-20021
5	
6	
7	
8	
9	

6TH OF OCTOBER CITY RAIL TRANSIT MONORAIL

The Authority | Consultant: Hill International | Main Contractor: ORASCOM CONSTRUCTION, The Arab Contractors, BOMBARDIER | Structural Designer: INNOVA TRANSPORTATION

KEY PLAN:

SCALE: AS SHOWN | SHOPDRAWING | DATE: 12/05/2023

REV	DATE	DSG.	CHK.	APP.	AMENDMENTS	STATUS
B	12/05/2023	M.KH	M.KH	DR.M.M	ISSUED FOR INFORMATION	IFI
A	11/20/2022	M.KH	M.KH	DR.M.M	ISSUED FOR INFORMATION	IFI

DRAWING TITLE
6TH OF OCTOBER MONORAIL
SERVICE WALKWAYS
ZONE (1008)
Z8-CHQ027

Project Code	Rubric	Initiator	Lot	Ref	Number	Revision
93M	047	6ACC	60DEP	DWG	08105	B

Tekla structures

Same comments as
93M-0476-ACC-60DEP-DWG-08079-B.

REVIEWED WITH COMMENT
MONORAILS PROJECT

MATERIAL LIST FOR ASSEMBLY MK'D **Z8-CHQ026**

Mark	Profile	GRADE	No.	Length	Area	Weight
Z8-CHQ026	CHQD5*1103.4	S235JR	1	3092	6.64	129.03
				Total	6.64	129.03

BOLT LIST:-

BOLT \ STUD	BOLT DESCRIPTION		QTY	FINISH
BOLT	B1N2W 16 X 50	A325M	4	

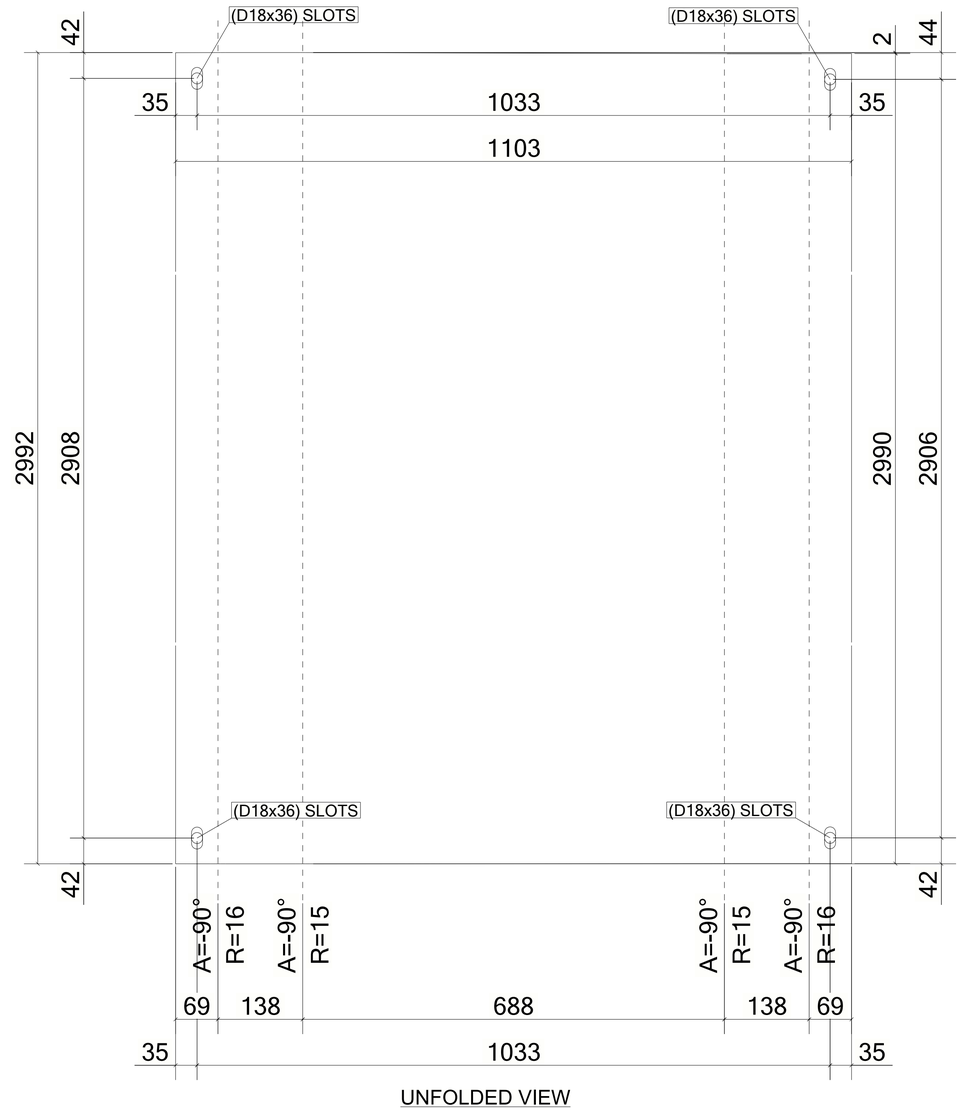

UNFOLDED VIEW

1 *REQUIRED AS DRAWN MARKED* **Z8-CHQ026**

6 October Monorail
Engineering Unit
Valid For Construction

GENERAL NOTES:

1. THE DIMENSIONS SHOWN ARE NOMINAL (IN MILLIMETERS), U.N.O.
2. WELD SIZESHALL BE AISC MINIMUM OF 6 mm UNLESS NOTED OTHERWISE.
3. ALL FIELD WELDS SHALL BE INSPECTED PER QUALITY ASSURANCE AND SPECIAL INSPECTIONS.

REFERENCE DRAWINGS

1	93M-BOA-NAT-LOT-04833
2	93M-BOA-NAT-LOT-09170
3	93M-BOA-NAT-LOT-01976
4	93M-BOA-NAT-LOT-20021
5	
6	
7	
8	
9	

6TH OF OCTOBER CITY RAIL TRANSIT MONORAIL

The Authority | Consultant: Hill International | Main Contractor: ORASCOM CONSTRUCTION, BOMBARDIER | Structural Designer: INNOVA TRANSPORTATION

KEY PLAN:

SCALE: AS SHOWN | SHOPDRAWING | DATE: 12/05/2023

REV	DATE	DSG.	CHK.	APP.	AMENDMENTS	STATUS
B	12/05/2023	M.KH	M.KH	DR.M.M	ISSUED FOR INFORMATION	IFI
A	11/20/2022	M.KH	M.KH	DR.M.M	ISSUED FOR INFORMATION	IFI

DRAWING TITLE
6TH OF OCTOBER MONORAIL
SERVICE WALKWAYS
ZONE (1008)
Z8-CHQ026

Project Code	Rubric	Initiator	Lot	Ref	Number	Revision
93M	047	6ACC	60DE	PDWG	08104	B

Tekla structures

Same comments as
93M-0476-ACC-60DEP-DWG-08079-B.

REVIEWED WITH COMMENT
MONORAILS PROJECT

MATERIAL LIST FOR ASSEMBLY MK'D **Z8-CHQ025**

Mark	Profile	GRADE	No.	Length	Area	Weight
Z8-CHQ025	CHQD5*1103.4	S235JR	1	3091	6.63	129.02
				Total	6.63	129.02

BOLT LIST:-

BOLT \ STUD	BOLT DESCRIPTION	QTY	FINISH
BOLT	B1N2W 16 X 50 A325M	4	

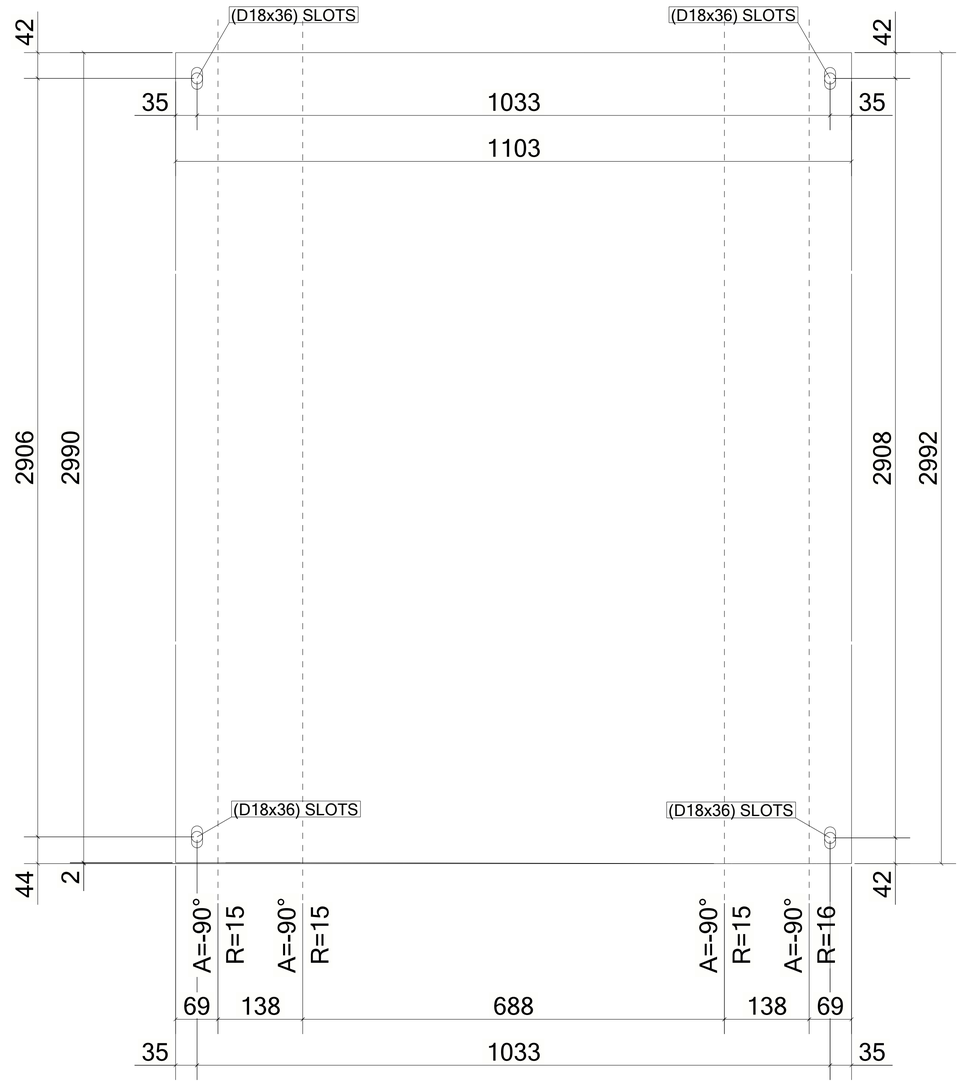

UNFOLDED VIEW

1 *REQUIRED AS DRAWN MARKED* **Z8-CHQ025**

6 October Monorail
Engineering Unit
Valid For Construction

GENERAL NOTES:

1. THE DIMENSIONS SHOWN ARE NOMINAL (IN MILLIMETERS), U.N.O.
2. WELD SIZESHALL BE AISC MINIMUM OF 6 mm UNLESS NOTED OTHERWISE.
3. ALL FIELD WELDS SHALL BE INSPECTED PER QUALITY ASSURANCE AND SPECIAL INSPECTIONS.

REFERENCE DRAWINGS

1	93M-BOA-NAT-LOT-04833
2	93M-BOA-NAT-LOT-09170
3	93M-BOA-NAT-LOT-01976
4	93M-BOA-NAT-LOT-20021
5	
6	
7	
8	
9	

6TH OF OCTOBER CITY RAIL TRANSIT MONORAIL

The Authority | Consultant: Hill International | Main Contractor: ORASCOM CONSTRUCTION, BOMBARDIER | Structural Designer: INNOVA TRANSPORTATION

KEY PLAN:

SCALE: AS SHOWN | SHOPDRAWING | DATE: 12/05/2023

REV	DATE	DSG.	CHK.	APP.	AMENDMENTS	STATUS
B	12/05/2023	M.KH	M.KH	DR.M.M	ISSUED FOR INFORMATION	IFI
A	11/20/2022	M.KH	M.KH	DR.M.M	ISSUED FOR INFORMATION	IFI

DRAWING TITLE
6TH OF OCTOBER MONORAIL
SERVICE WALKWAYS
ZONE (1008)
Z8-CHQ025

Project Code	Rubric	Initiator	Lot	Ref	Number	Revision
93M	047	6ACC	60DE	PDWG	0810	3 B

Tekla structures

Same comments as 93M-0476-ACC-60DEP-DWG-08079-B.

REVIEWED WITH COMMENT
MONORAILS PROJECT

MATERIAL LIST FOR ASSEMBLY MK'D **Z8-CHQ024**

Mark	Profile	GRADE	No.	Length	Area	Weight
Z8-CHQ024	CHQD5*1103.4	S235JR	1	1588	3.31	64.19
				Total	3.31	64.19

BOLT LIST:-

BOLT \ STUD	BOLT DESCRIPTION	QTY	FINISH
BOLT	B1N2W16 X 50 A325M	4	

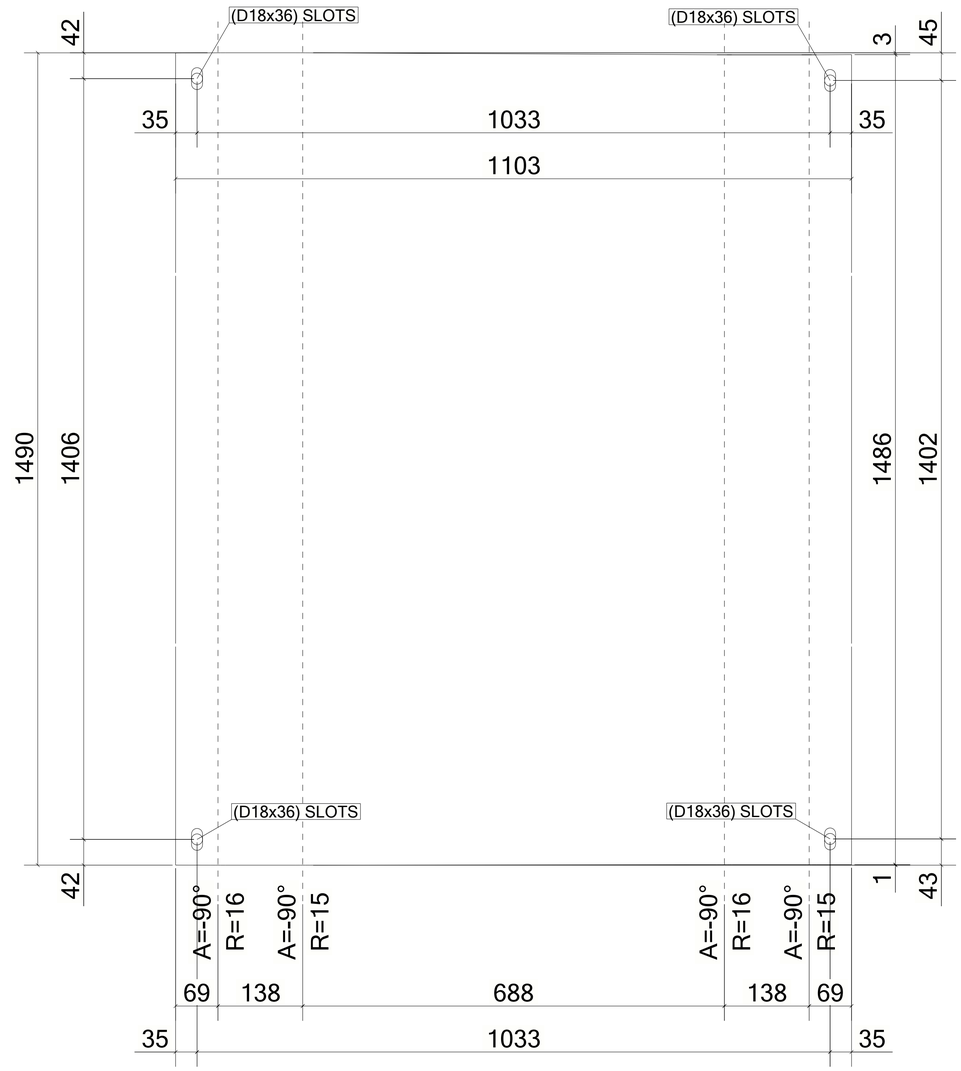

UNFOLDED VIEW

2 *REQUIRED AS DRAWN MARKED* **Z8-CHQ024**

6 October Monorail
Engineering Unit
Valid For Construction

GENERAL NOTES:

1. THE DIMENSIONS SHOWN ARE NOMINAL (IN MILLIMETERS), U.N.O.
2. WELD SIZESHALL BE AISC MINIMUM OF 6 mm UNLESS NOTED OTHERWISE.
3. ALL FIELD WELDS SHALL BE INSPECTED PER QUALITY ASSURANCE AND SPECIAL INSPECTIONS.

REFERENCE DRAWINGS

1	93M-BOA-NAT-LOT-04833
2	93M-BOA-NAT-LOT-09170
3	93M-BOA-NAT-LOT-01976
4	93M-BOA-NAT-LOT-20021
5	
6	
7	
8	
9	

6TH OF OCTOBER CITY RAIL TRANSIT MONORAIL

The Authority | Hill International Consultant | Main Contractor | Structural Designer

KEY PLAN:

SCALE: AS SHOWN | SHOPDRAWING | DATE: 12/05/2023

REV	DATE	DSG.	CHK.	APP.	AMENDMENTS	STATUS
B	12/05/2023	M.KH	M.KH	DR.M.M	ISSUED FOR INFORMATION	IFI
A	11/20/2022	M.KH	M.KH	DR.M.M	ISSUED FOR INFORMATION	IFI

DRAWING TITLE
6TH OF OCTOBER MONORAIL
SERVICE WALKWAYS
ZONE (1008)
Z8-CHQ024

Project Code	Rubric	Initiator	Lot	Ref	Number	Revision
93M	047	6ACC	60DEP	DWG	08102	B

Tekla structures

Same comments as
93M-0476-ACC-60DEP-DWG-08079-B.

REVIEWED WITH COMMENT
MONORAILS PROJECT

MATERIAL LIST FOR ASSEMBLY MK'D **Z8-CHQ023**

Mark	Profile	GRADE	No.	Length	Area	Weight
Z8-CHQ023	CHQD5*1103.4	S235JR	1	3088	6.63	128.90
				Total	6.63	128.90

BOLT LIST:-

BOLT \ STUD	BOLT DESCRIPTION	QTY	FINISH
BOLT	B1N2W16 X 50 A325M	4	

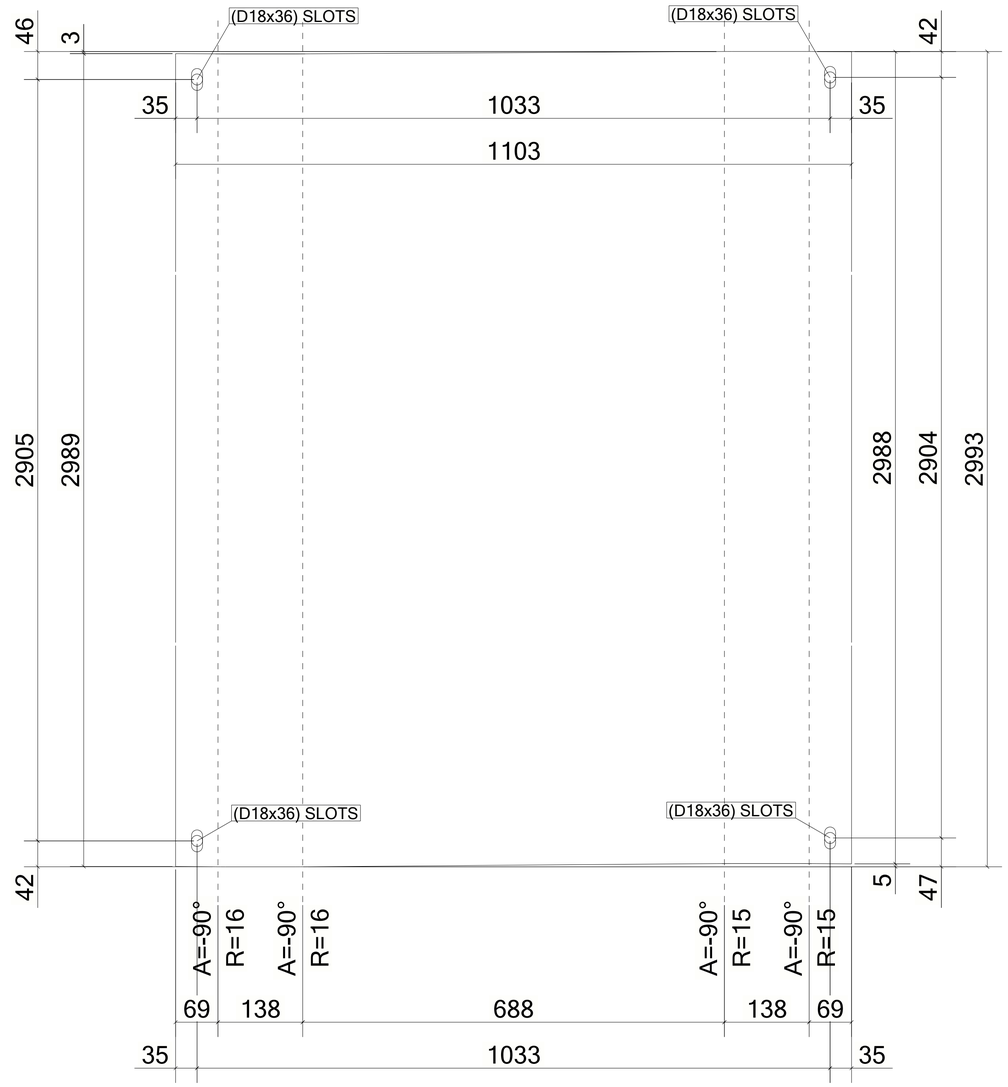

UNFOLDED VIEW

1 *REQUIRED AS DRAWN MARKED* **Z8-CHQ023**

6 October Monorail
Engineering Unit
Valid For Construction

GENERAL NOTES:

1. THE DIMENSIONS SHOWN ARE NOMINAL (IN MILLIMETERS), U.N.O.
2. WELD SIZESHALL BE AISC MINIMUM OF 6 mm UNLESS NOTED OTHERWISE.
3. ALL FIELD WELDS SHALL BE INSPECTED PER QUALITY ASSURANCE AND SPECIAL INSPECTIONS.

REFERENCE DRAWINGS

1	93M-BOA-NAT-LOT-04833
2	93M-BOA-NAT-LOT-09170
3	93M-BOA-NAT-LOT-01976
4	93M-BOA-NAT-LOT-20021
5	
6	
7	
8	
9	

6TH OF OCTOBER CITY RAIL TRANSIT MONORAIL

The Authority — Hill International Consultant — Main Contractor — Structural Designer

KEY PLAN:

SCALE	SHOPDRAWING	DATE
AS SHOWN		12/05/2023

REV	DATE	DSG.	CHK.	APP.	AMENDMENTS	STATUS
B	12/05/2023	M.KH	M.KH	DR.M.M	ISSUED FOR INFORMATION	IFI
A	11/20/2022	M.KH	M.KH	DR.M.M	ISSUED FOR INFORMATION	IFI

DRAWING TITLE
6TH OF OCTOBER MONORAIL
SERVICE WALKWAYS
ZONE (1008)
Z8-CHQ023

Project Code	Rubric	Initiator	Lot	Ref	Number	Revision
93M	047	6ACC	60DE	PDWG	0810	1 B

Tekla structures

Same comments as
93M-0476-ACC-60DEP-DWG-08079-B.

REVIEWED WITH COMMENT
MONORAILS PROJECT

MATERIAL LIST FOR ASSEMBLY MK'D **Z8-CHQ022**

Mark	Profile	GRADE	No.	Length	Area	Weight
Z8-CHQ022	CHQD5*1103.4	S235JR	1	2040	4.31	83.68
				Total	4.31	83.68

BOLT LIST:-

BOLT \ STUD	BOLT DESCRIPTION	QTY	FINISH
BOLT	B1N2W16 X 50 A325M	4	

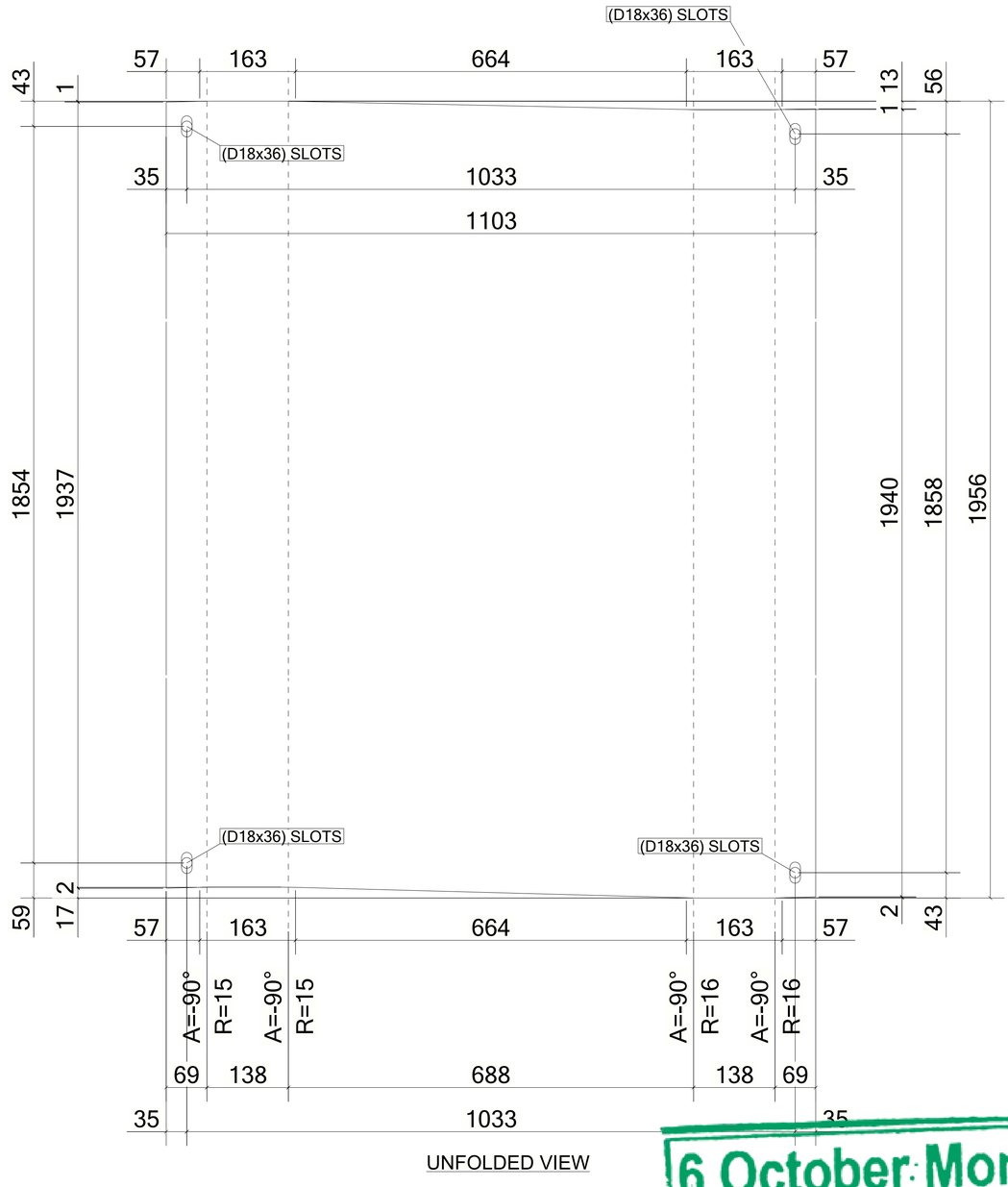

UNFOLDED VIEW

1 *REQUIRED AS DRAWN MARKED* **Z8-CHQ022**

6 October Monorail
Engineering Unit
Valid For Construction

GENERAL NOTES:

1. THE DIMENSIONS SHOWN ARE NOMINAL (IN MILLIMETERS), U.N.O.
2. WELD SIZESHALL BE AISC MINIMUM OF 6 mm UNLESS NOTED OTHERWISE.
3. ALL FIELD WELDS SHALL BE INSPECTED PER QUALITY ASSURANCE AND SPECIAL INSPECTIONS.

REFERENCE DRAWINGS

1	93M-BOA-NAT-LOT-04833
2	93M-BOA-NAT-LOT-09170
3	93M-BOA-NAT-LOT-01976
4	93M-BOA-NAT-LOT-20021
5	
6	
7	
8	
9	

6TH OF OCTOBER CITY RAIL TRANSIT MONORAIL

The Authority | Consultant: Hill International | Main Contractor: ORASCOM CONSTRUCTION, BOMBARDIER | Structural Designer: INNOVA TRANSPORTATION

KEY PLAN:

SCALE: AS SHOWN | SHOPDRAWING | DATE: 12/05/2023

REV	DATE	DSG.	CHK.	APP.	AMENDMENTS	STATUS
B	12/05/2023	M.KH	M.KH	DR.M.M	ISSUED FOR INFORMATION	IFI
A	11/20/2022	M.KH	M.KH	DR.M.M	ISSUED FOR INFORMATION	IFI

DRAWING TITLE
6TH OF OCTOBER MONORAIL
SERVICE WALKWAYS
ZONE (1008)
Z8-CHQ022

Project Code	Rubric	Initiator	Lot	Ref	Number	Revision
93M	0476	ACC	60DEP	DWG	08100	B

Tekla structures

Same comments as 93M-0476-ACC-60DEP-DWG-08079-B.

REVIEWED WITH COMMENT
MONORAILS PROJECT

MATERIAL LIST FOR ASSEMBLY MK'D **Z8-CHQ021**

Mark	Profile	GRADE	No.	Length	Area	Weight
Z8-CHQ021	CHQD5*1103.4	S235JR	1	2000	4.32	83.86
				Total	4.32	83.86

BOLT LIST:-

BOLT \ STUD	BOLT DESCRIPTION	QTY	FINISH
BOLT	B1N2W16 X 50 A325M	4	

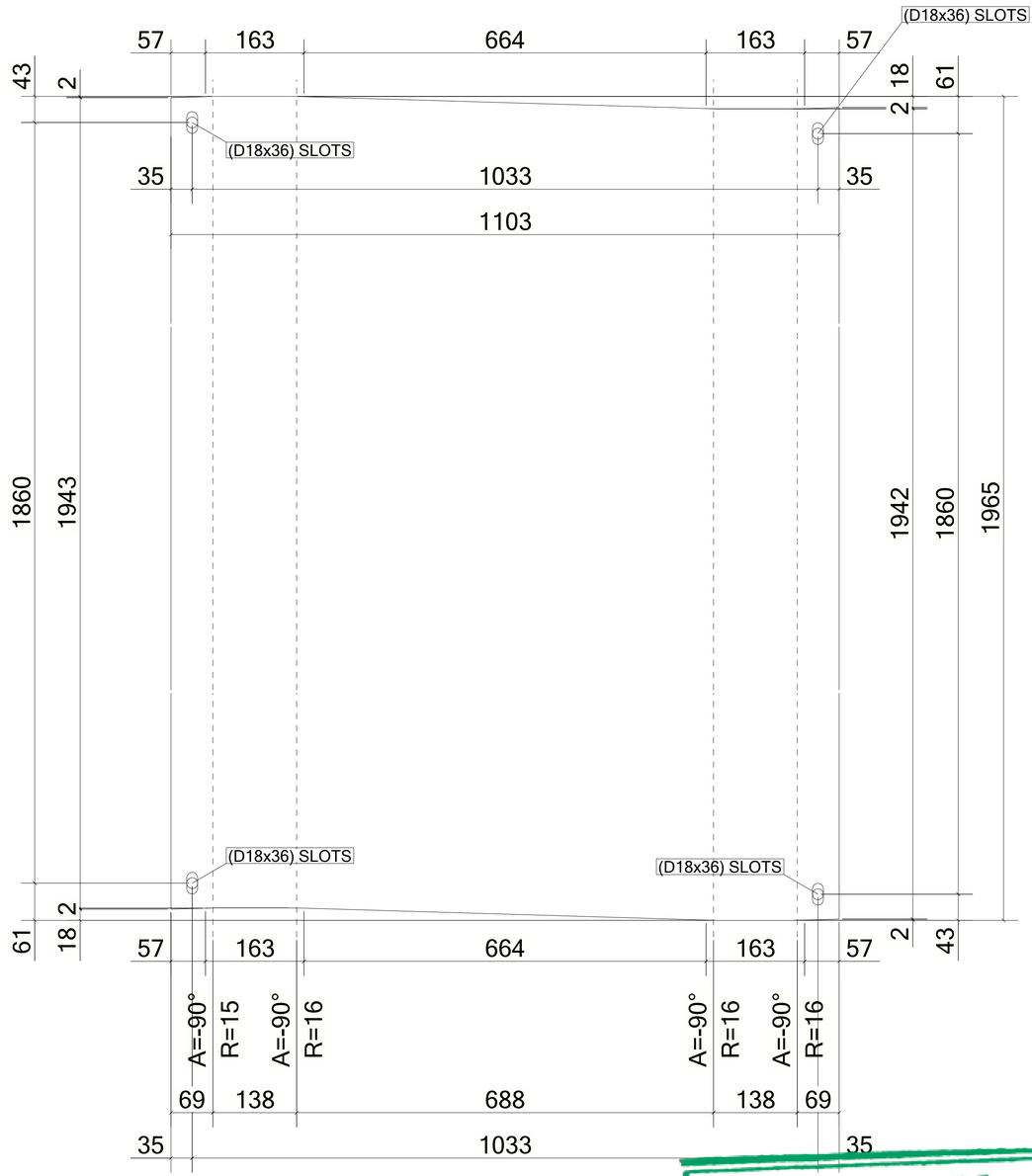

UNFOLDED VIEW

1 *REQUIRED AS DRAWN MARKED* **Z8-CHQ021**

6 October Monorail
Engineering Unit
Valid For Construction

GENERAL NOTES:

1. THE DIMENSIONS SHOWN ARE NOMINAL (IN MILLIMETERS), U.N.O.
2. WELD SIZESHALL BE AISC MINIMUM OF 6 mm UNLESS NOTED OTHERWISE.
3. ALL FIELD WELDS SHALL BE INSPECTED PER QUALITY ASSURANCE AND SPECIAL INSPECTIONS.

REFERENCE DRAWINGS

1	93M-BOA-NAT-LOT-04833
2	93M-BOA-NAT-LOT-09170
3	93M-BOA-NAT-LOT-01976
4	93M-BOA-NAT-LOT-20021
5	
6	
7	
8	
9	

6TH OF OCTOBER CITY RAIL TRANSIT MONORAIL

The Authority | Consultant: Hill International | Main Contractor: ORASCOM CONSTRUCTION, Six Construct, BOMBARDIER | Structural Designer: INNOVA TRANSPORTATION

KEY PLAN:

SCALE: AS SHOWN | SHOPDRAWING | DATE: 12/05/2023

REV	DATE	DSG.	CHK.	APP.	AMENDMENTS	STATUS
B	12/05/2023	M.KH	M.KH	DR.M.M	ISSUED FOR INFORMATION	IFI
A	11/20/2022	M.KH	M.KH	DR.M.M	ISSUED FOR INFORMATION	IFI

DRAWING TITLE
6TH OF OCTOBER MONORAIL
SERVICE WALKWAYS
ZONE (1008)
Z8-CHQ021

Project Code	Rubric	Initiator	Lot	Ref	Number	Revision
93M	0476	ACC	60DEP	DWG	08099	B

Tekla structures

Same comments as
93M-0476-ACC-60DEP-DWG-08079-B.

REVIEWED WITH COMMENT
MONORAILS PROJECT

MATERIAL LIST FOR ASSEMBLY MK'D **Z8-CHQ020**

Mark	Profile	GRADE	No.	Length	Area	Weight
Z8-CHQ020	CHQD5*1103.4	S235JR	1	3075	6.60	128.42
				Total	6.60	128.42

BOLT LIST:-

BOLT \ STUD	BOLT DESCRIPTION	QTY	FINISH
BOLT	B1N2W16 X 50 A325M	4	

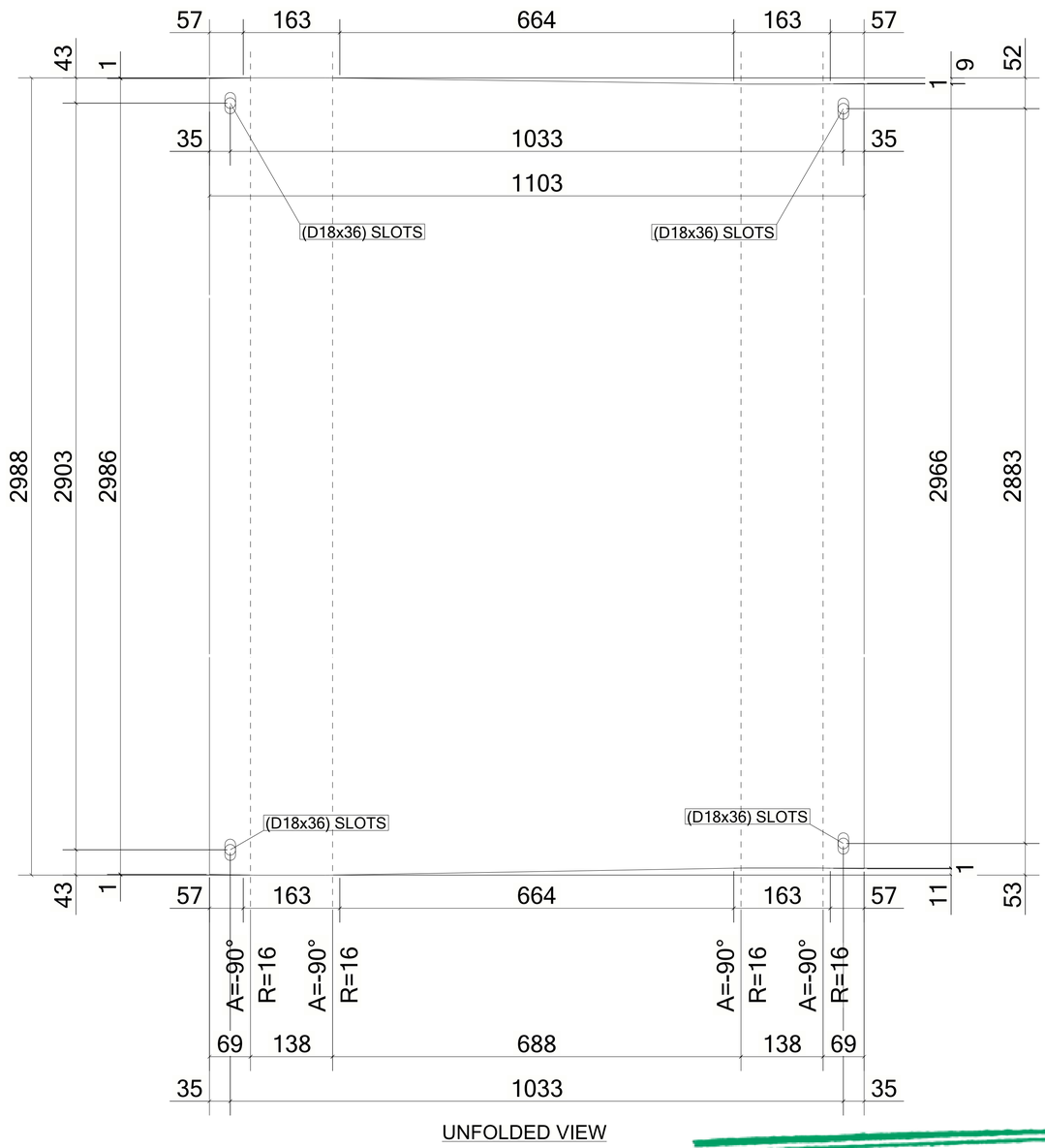

UNFOLDED VIEW

1 *REQUIRED AS DRAWN MARKED* **Z8-CHQ020**

6 October Monorail
Engineering Unit
Valid For Construction

GENERAL NOTES:

1. THE DIMENSIONS SHOWN ARE NOMINAL (IN MILLIMETERS), U.N.O.
2. WELD SIZESHALL BE AISC MINIMUM OF 6 mm UNLESS NOTED OTHERWISE.
3. ALL FIELD WELDS SHALL BE INSPECTED PER QUALITY ASSURANCE AND SPECIAL INSPECTIONS.

REFERENCE DRAWINGS

1	93M-BOA-NAT-LOT-04833
2	93M-BOA-NAT-LOT-09170
3	93M-BOA-NAT-LOT-01976
4	93M-BOA-NAT-LOT-20021
5	
6	
7	
8	
9	

6TH OF OCTOBER CITY RAIL TRANSIT MONORAIL

The Authority | Consultant: Hill International | Main Contractor: ORASCOM CONSTRUCTION / BOMBARDIER | Structural Designer: INNOVA TRANSPORTATION

KEY PLAN:

SCALE	SHOPDRAWING	DATE
AS SHOWN		12/05/2023

REV	DATE	DSG.	CHK.	APP.	AMENDMENTS	STATUS
B	12/05/2023	M.KH	M.KH	DR.M.M	ISSUED FOR INFORMATION	IFI
A	11/20/2022	M.KH	M.KH	DR.M.M	ISSUED FOR INFORMATION	IFI

DRAWING TITLE
6TH OF OCTOBER MONORAIL
SERVICE WALKWAYS
ZONE (1008)
Z8-CHQ020

Project Code	Rubric	Initiator	Lot	Ref	Number	Revision
93M	047	6ACC	60DE	PDWG	08098	B

Tekla structures

Same comments as
93M-0476-ACC-60DEP-DWG-08079-B.

REVIEWED WITH COMMENT
MONORAILS PROJECT

MATERIAL LIST FOR ASSEMBLY MK'D **Z8-CHQ019**

Mark	Profile	GRADE	No.	Length	Area	Weight
Z8-CHQ019	CHQD5*1103.4	S235JR	1	2225	4.72	91.72
				Total	4.72	91.72

BOLT LIST:-

BOLT \ STUD	BOLT DESCRIPTION	QTY	FINISH
BOLT	B1N2W16 X 50 A325M	4	

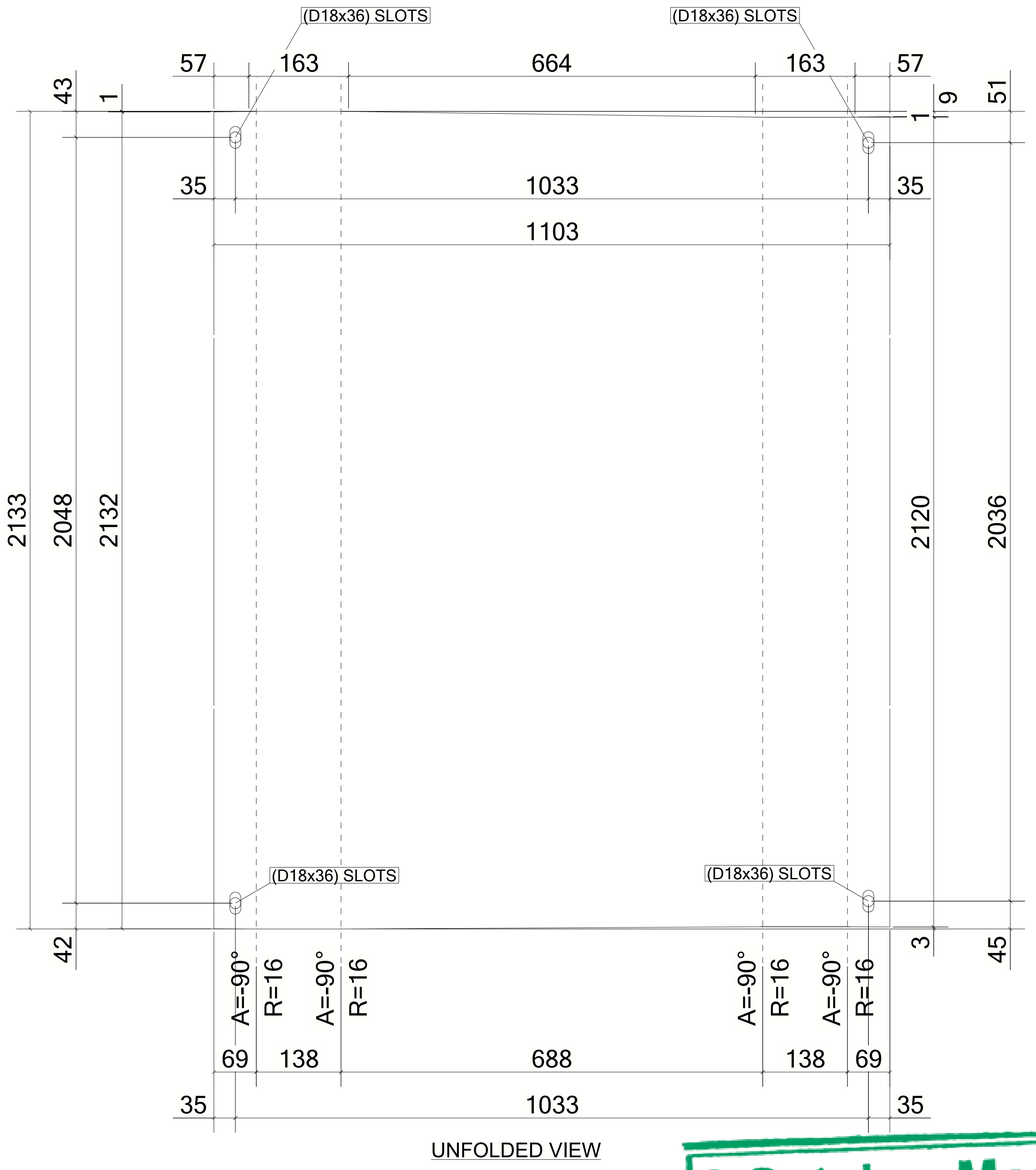

UNFOLDED VIEW

1 *REQUIRED AS DRAWN MARKED* **Z8-CHQ019**

6 October Monorail
Engineering Unit
Valid For Construction

GENERAL NOTES:

1. THE DIMENSIONS SHOWN ARE NOMINAL (IN MILLIMETERS), U.N.O.
2. WELD SIZESHALL BE AISC MINIMUM OF 6 mm UNLESS NOTED OTHERWISE.
3. ALL FIELD WELDS SHALL BE INSPECTED PER QUALITY ASSURANCE AND SPECIAL INSPECTIONS.

REFERENCE DRAWINGS

1	93M-BOA-NAT-LOT-04833
2	93M-BOA-NAT-LOT-09170
3	93M-BOA-NAT-LOT-01976
4	93M-BOA-NAT-LOT-20021
5	
6	
7	
8	
9	

6TH OF OCTOBER CITY RAIL TRANSIT MONORAIL

The Authority | Consultant: Hill International | Main Contractor: ORASCOM CONSTRUCTION, The Arab Contractors, BOMBARDIER | Structural Designer: INNOVA TRANSPORTATION

KEY PLAN:

SCALE	SHOPDRAWING	DATE
AS SHOWN		12/05/2023

REV	DATE	DSG.	CHK.	APP.	AMENDMENTS	STATUS
B	12/05/2023	M.KH	M.KH	DR.M.M	ISSUED FOR INFORMATION	IFI
A	11/20/2022	M.KH	M.KH	DR.M.M	ISSUED FOR INFORMATION	IFI

DRAWING TITLE
6TH OF OCTOBER MONORAIL
SERVICE WALKWAYS
ZONE (1008)
Z8-CHQ019

Project Code	Rubric	Initiator	Lot	Ref	Number	Revision
93M	0476	ACC	60DEP	DWG	08097	B

Tekla structures

Same comments as 93M-0476-ACC-60DEP-DWG-08079-B.

REVIEWED WITH COMMENT
MONORAILS PROJECT

MATERIAL LIST FOR ASSEMBLY MK'D **Z8-CHQ018**

Mark	Profile	GRADE	No.	Length	Area	Weight
Z8-CHQ018	CHQD5*1103.4	S235JR	1	2218	4.71	91.44
				Total	4.71	91.44

BOLT LIST:-

BOLT \ STUD	BOLT DESCRIPTION	QTY	FINISH
BOLT	B1N2W16 X 50 A325M	4	

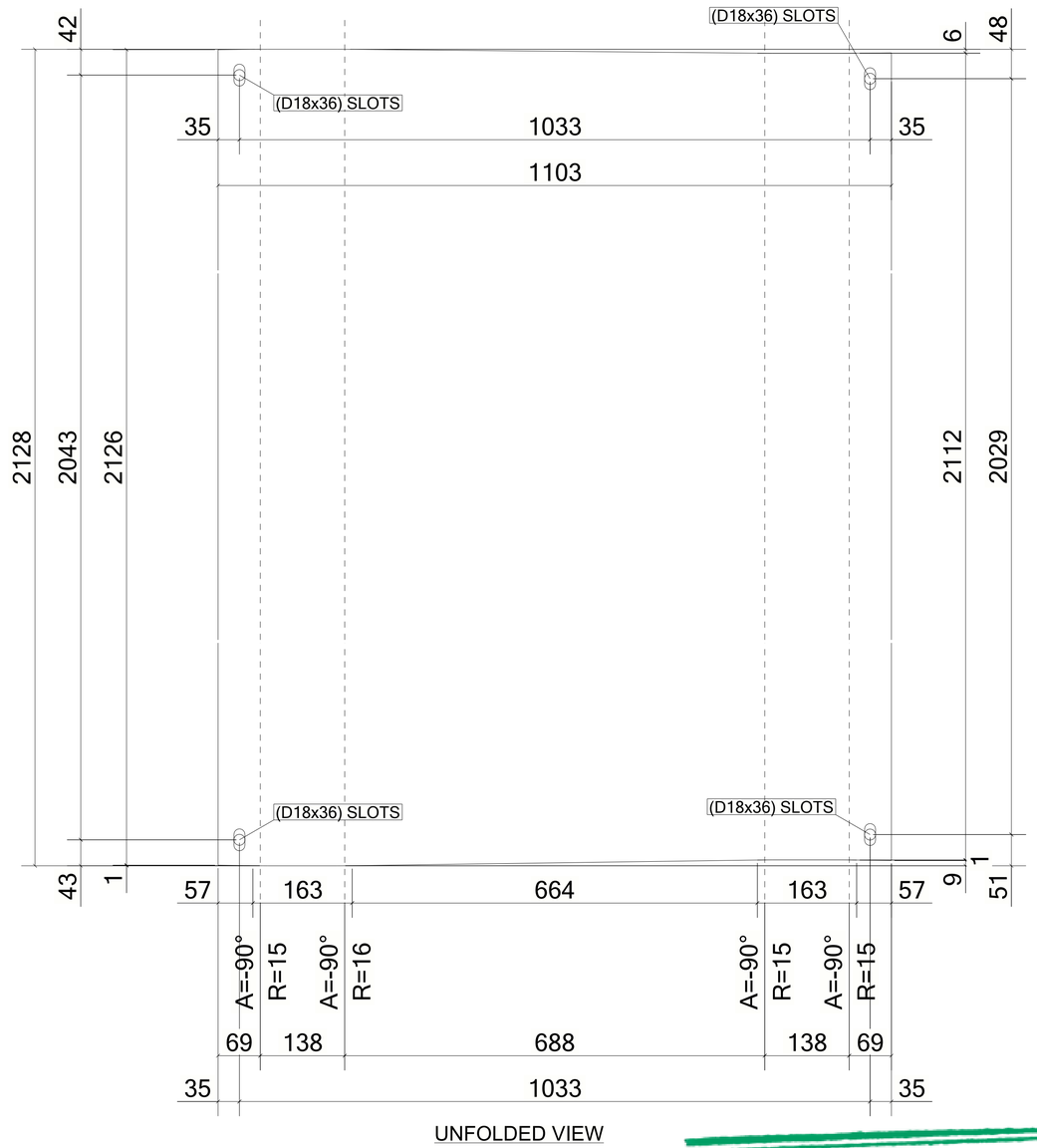

UNFOLDED VIEW

1 *REQUIRED AS DRAWN MARKED* **Z8-CHQ018**

6 October: Monorail
Engineering Unit
Valid For Construction

GENERAL NOTES:

1. THE DIMENSIONS SHOWN ARE NOMINAL (IN MILLIMETERS), U.N.O.
2. WELD SIZESHALL BE AISC MINIMUM OF 6 mm UNLESS NOTED OTHERWISE.
3. ALL FIELD WELDS SHALL BE INSPECTED PER QUALITY ASSURANCE AND SPECIAL INSPECTIONS.

REFERENCE DRAWINGS

1	93M-BOA-NAT-LOT-04833
2	93M-BOA-NAT-LOT-09170
3	93M-BOA-NAT-LOT-01976
4	93M-BOA-NAT-LOT-20021
5	
6	
7	
8	
9	

6TH OF OCTOBER CITY RAIL TRANSIT MONORAIL

The Authority | Hill International Consultant | Main Contractor | Structural Designer

KEY PLAN:

SCALE: AS SHOWN | SHOPDRAWING | DATE: 12/05/2023

REV	DATE	DSG.	CHK.	APP.	AMENDMENTS	STATUS
B	12/05/2023	M.KH	M.KH	DR.M.M	ISSUED FOR INFORMATION	IFI
A	11/20/2022	M.KH	M.KH	DR.M.M	ISSUED FOR INFORMATION	IFI

DRAWING TITLE
6TH OF OCTOBER MONORAIL
SERVICE WALKWAYS
ZONE (1008)
Z8-CHQ018

Project Code	Rubric	Initiator	Lot	Ref	Number	Revision
93M	0476	ACC	60	DEP	DWG 08096	B

Tekla structures

Same comments as
93M-0476-ACC-60DEP-DWG-08079-B.

REVIEWED WITH COMMENT
MONORAILS PROJECT

MATERIAL LIST FOR ASSEMBLY MK'D **Z8-CHQ017**

Mark	Profile	GRADE	No.	Length	Area	Weight
Z8-CHQ017	CHQD5*1103.4	S235JR	1	3076	6.61	128.46
				Total	6.61	128.46

BOLT LIST:-

BOLT \ STUD	BOLT DESCRIPTION		QTY	FINISH
BOLT	B1N2W16 X 50	A325M	4	

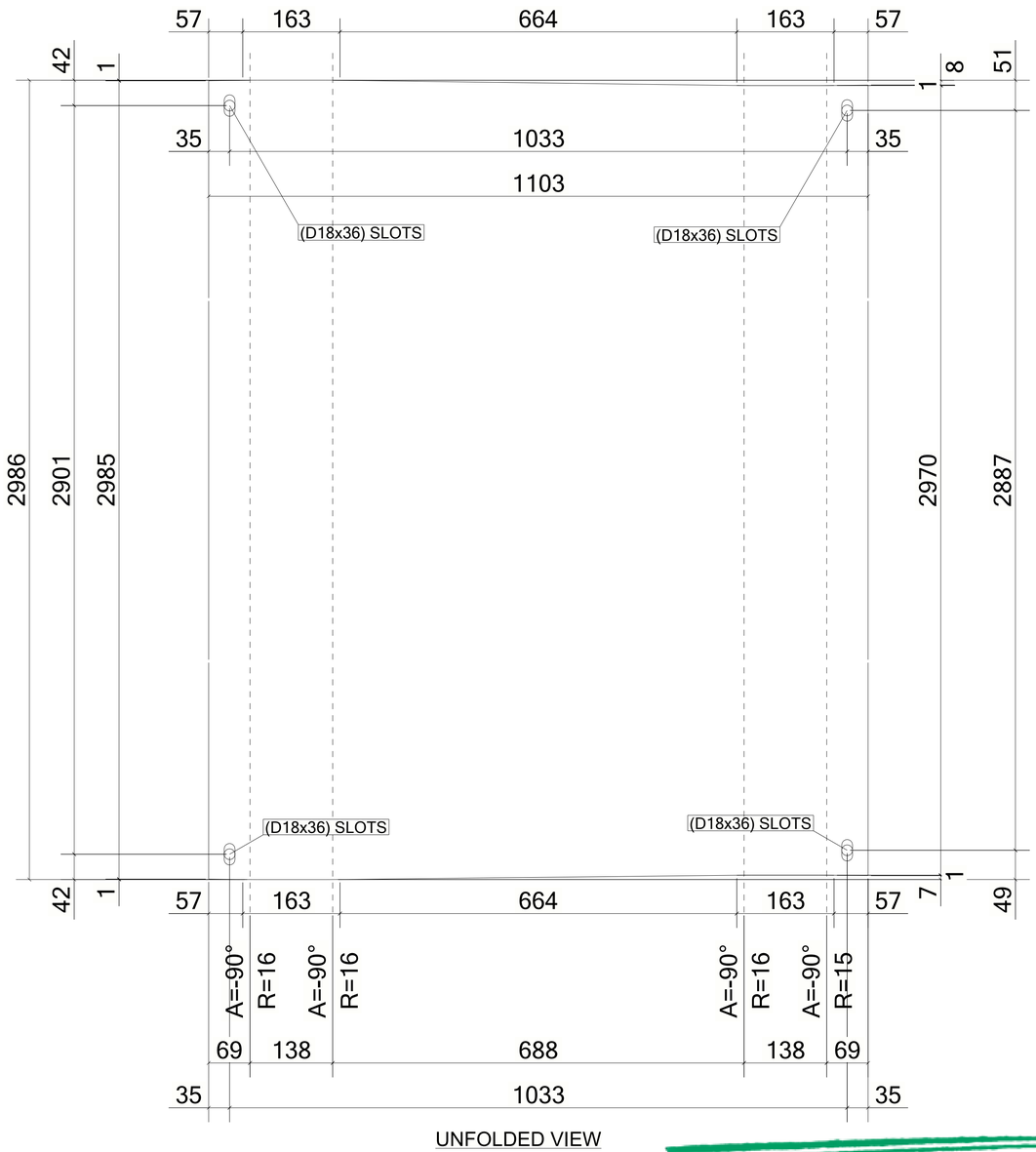

UNFOLDED VIEW

1 *REQUIRED AS DRAWN MARKED* **Z8-CHQ017**

6 October Monorail
Engineering Unit
Valid For Construction

GENERAL NOTES:

1. THE DIMENSIONS SHOWN ARE NOMINAL (IN MILLIMETERS), U.N.O.
2. WELD SIZESHALL BE AISC MINIMUM OF 6 mm UNLESS NOTED OTHERWISE.
3. ALL FIELD WELDS SHALL BE INSPECTED PER QUALITY ASSURANCE AND SPECIAL INSPECTIONS.

REFERENCE DRAWINGS

1	93M-BOA-NAT-LOT-04833
2	93M-BOA-NAT-LOT-09170
3	93M-BOA-NAT-LOT-01976
4	93M-BOA-NAT-LOT-20021
5	
6	
7	
8	
9	

6TH OF OCTOBER CITY RAIL TRANSIT MONORAIL

The Authority — Hill International Consultant — Main Contractor — Structural Designer

KEY PLAN:

SCALE: AS SHOWN | SHOPDRAWING | DATE: 12/05/2023

REV	DATE	DSG.	CHK.	APP.	AMENDMENTS	STATUS
B	12/05/2023	M.KH	M.KH	DR.M.M	ISSUED FOR INFORMATION	IFI
A	11/20/2022	M.KH	M.KH	DR.M.M	ISSUED FOR INFORMATION	IFI

DRAWING TITLE
6TH OF OCTOBER MONORAIL
SERVICE WALKWAYS
ZONE (1008)
Z8-CHQ017

Project Code	Rubric	Initiator	Lot	Ref	Number	Revision
93M	047	6ACC	60DE	PDWG	08095	B

Tekla structures

Same comments as
93M-0476-ACC-60DEP-DWG-08079-B.

REVIEWED WITH COMMENT
MONORAILS PROJECT

MATERIAL LIST FOR ASSEMBLY MK'D **Z8-CHQ016**

Mark	Profile	GRADE	No.	Length	Area	Weight
Z8-CHQ016	CHQD5*1103.4	S235JR	1	3087	6.63	128.87
				Total	6.63	128.87

BOLT LIST:-

BOLT \ STUD	BOLT DESCRIPTION	QTY	FINISH
BOLT	B1N2W16 X 50 A325M	4	

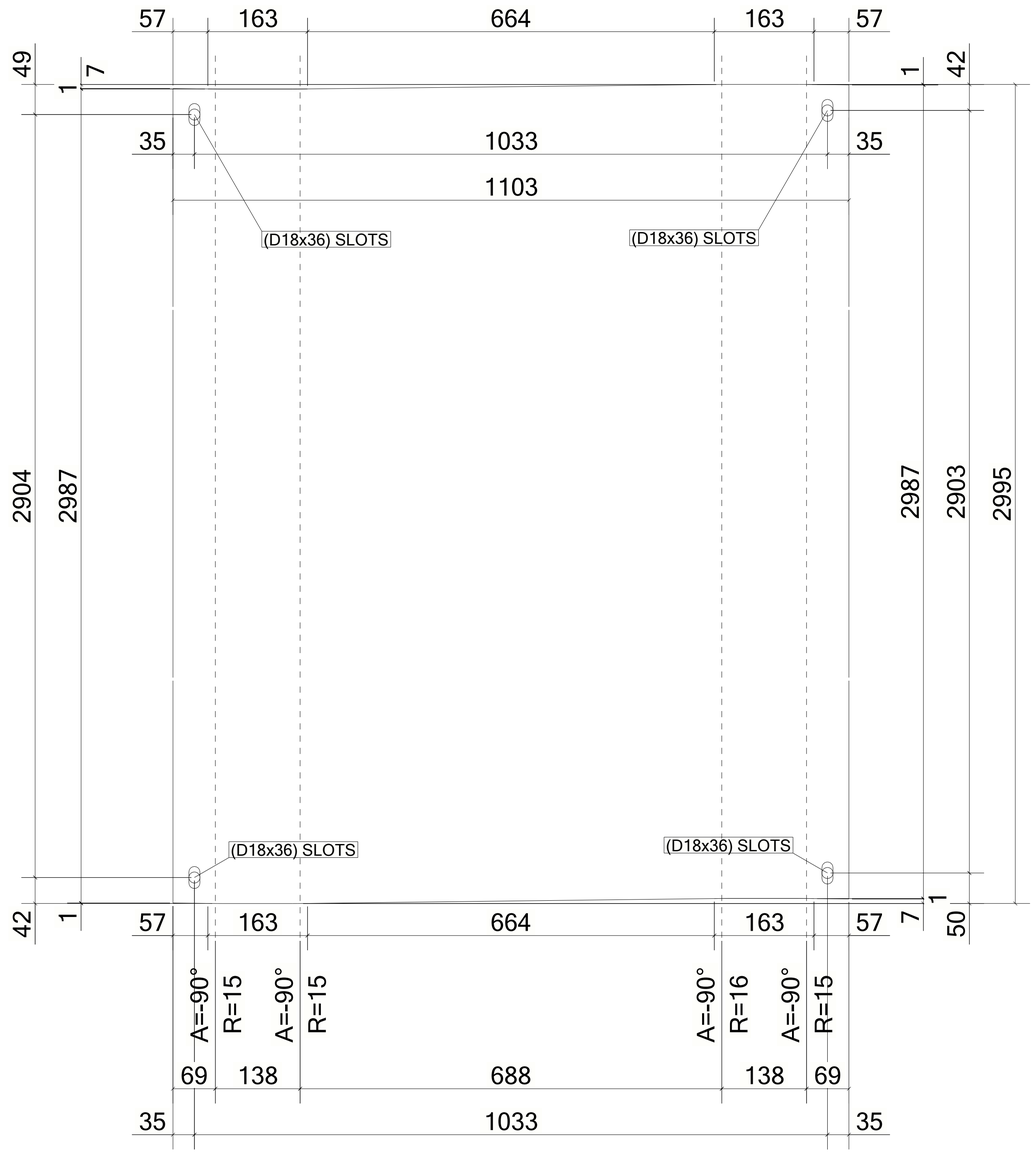

UNFOLDED VIEW

1 *REQUIRED AS DRAWN MARKED* **Z8-CHQ016**

6 October Monorail
Engineering Unit
Valid For Construction

GENERAL NOTES:

1. THE DIMENSIONS SHOWN ARE NOMINAL (IN MILLIMETERS), U.N.O.
2. WELD SIZESHALL BE AISC MINIMUM OF 6 mm UNLESS NOTED OTHERWISE.
3. ALL FIELD WELDS SHALL BE INSPECTED PER QUALITY ASSURANCE AND SPECIAL INSPECTIONS.

REFERENCE DRAWINGS

1	93M-BOA-NAT-LOT-04833
2	93M-BOA-NAT-LOT-09170
3	93M-BOA-NAT-LOT-01976
4	93M-BOA-NAT-LOT-20021
5	
6	
7	
8	
9	

6TH OF OCTOBER CITY RAIL TRANSIT MONORAIL

The Authority — Hill International Consultant — Main Contractor — Structural Designer

KEY PLAN:

SCALE	SHOPDRAWING	DATE
AS SHOWN		12/05/2023

REV	DATE	DSG.	CHK.	APP.	AMENDMENTS	STATUS
B	12/05/2023	MKH	MKH	DRMM	ISSUED FOR INFORMATION	IFI
A	11/20/2022	MKH	MKH	DRMM	ISSUED FOR INFORMATION	IFI

DRAWING TITLE
6TH OF OCTOBER MONORAIL
SERVICE WALKWAYS
ZONE (1008)
Z8-CHQ016

Project Code	Rubric	Initiator	Lot	Ref	Number	Revision
93M	0476	ACC	60DEP	DWG	08094	B

Tekla structures

Same comments as
93M-0476-ACC-60DEP-DWG-08079-B.

REVIEWED WITH COMMENT
MONORAILS PROJECT

MATERIAL LIST FOR ASSEMBLY MK'D **Z8-CHQ015**						
Mark	Profile	GRADE	No.	Length	Area	Weight
Z8-CHQ015	CHQD5*1103.4	S235JR	1	3088	6.63	128.92
				Total	6.63	128.92

BOLT LIST:-

BOLT \ STUD	BOLT DESCRIPTION	QTY	FINISH
BOLT	B1N2W 16 X 50 A325M	4	

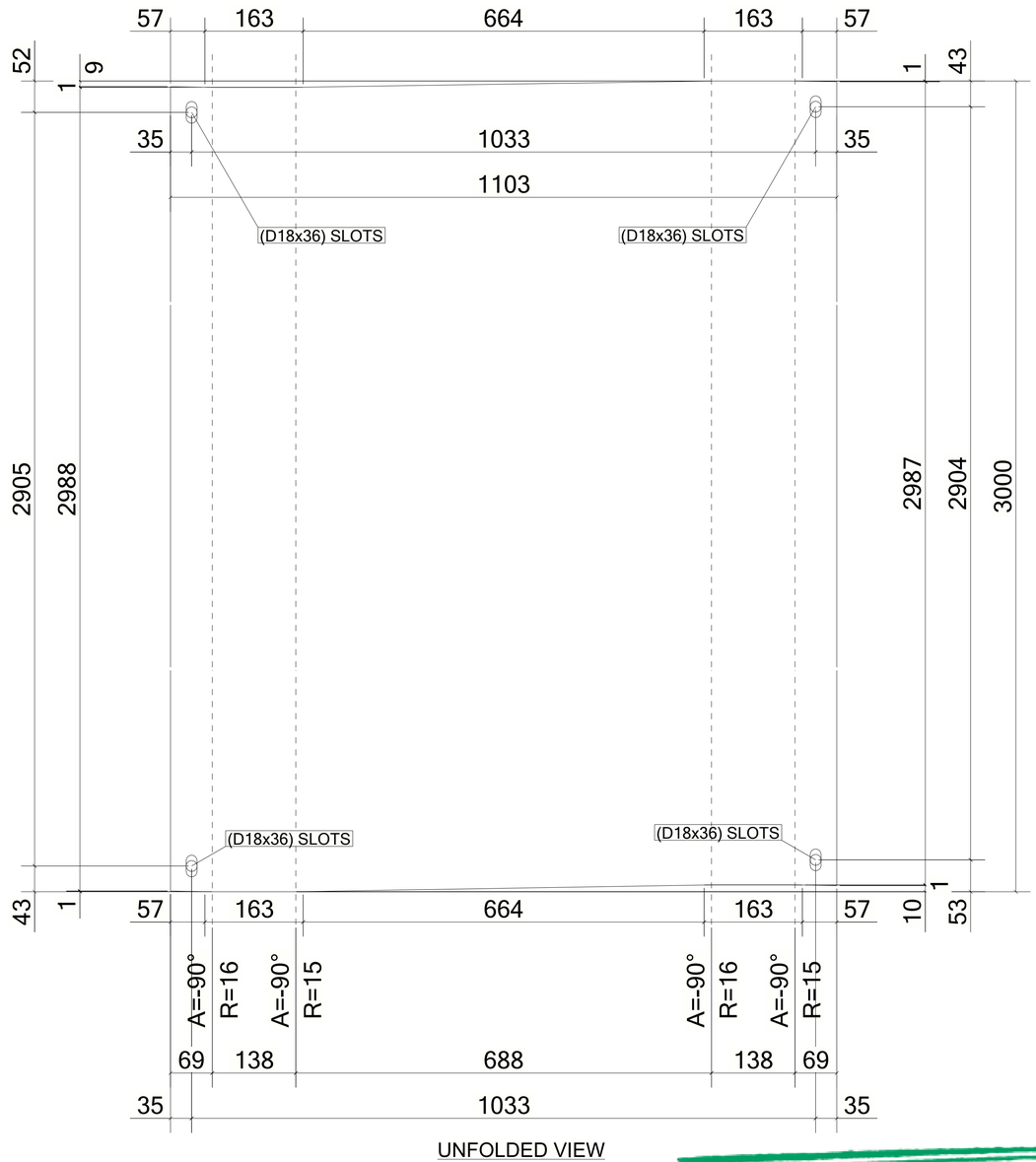

UNFOLDED VIEW

1 *REQUIRED AS DRAWN MARKED* **Z8-CHQ015**

6 October Monorail
Engineering Unit
Valid For Construction

GENERAL NOTES:

1. THE DIMENSIONS SHOWN ARE NOMINAL (IN MILLIMETERS), U.N.O.
2. WELD SIZESHALL BE AISC MINIMUM OF 6 mm UNLESS NOTED OTHERWISE.
3. ALL FIELD WELDS SHALL BE INSPECTED PER QUALITY ASSURANCE AND SPECIAL INSPECTIONS.

REFERENCE DRAWINGS

1	93M-BOA-NAT-LOT-04833
2	93M-BOA-NAT-LOT-09170
3	93M-BOA-NAT-LOT-01976
4	93M-BOA-NAT-LOT-20021
5	
6	
7	
8	
9	

6TH OF OCTOBER CITY RAIL TRANSIT MONORAIL

The Authority | Hill International Consultant | Main Contractor | Structural Designer

KEY PLAN:

SCALE: AS SHOWN | SHOPDRAWING | DATE: 12/05/2023

REV	DATE	DSG.	CHK.	APP.	AMENDMENTS	STATUS
B	12/05/2023	M.KH	M.KH	DR.M.M	ISSUED FOR INFORMATION	IFI
A	11/20/2022	M.KH	M.KH	DR.M.M	ISSUED FOR INFORMATION	IFI

DRAWING TITLE
6TH OF OCTOBER MONORAIL
SERVICE WALKWAYS
ZONE (1008)
Z8-CHQ015

Project Code	Rubric	Initiator	Lot	Ref	Number	Revision
93	M04	76	ACC60	DEP	DWG0809	B

Tekla structures

Same comments as
93M-0476-ACC-60DEP-DWG-08079-B.

REVIEWED WITH COMMENT
MONORAILS PROJECT

MATERIAL LIST FOR ASSEMBLY MK'D **Z8-CHQ014**

Mark	Profile	GRADE	No.	Length	Area	Weight
Z8-CHQ014	CHQD5*1103.4	S235JR	1	3081	6.61	128.59
				Total	6.61	128.59

BOLT LIST:-

BOLT \ STUD	BOLT DESCRIPTION	QTY	FINISH
BOLT	B1N2W16 X 50 A325M	4	

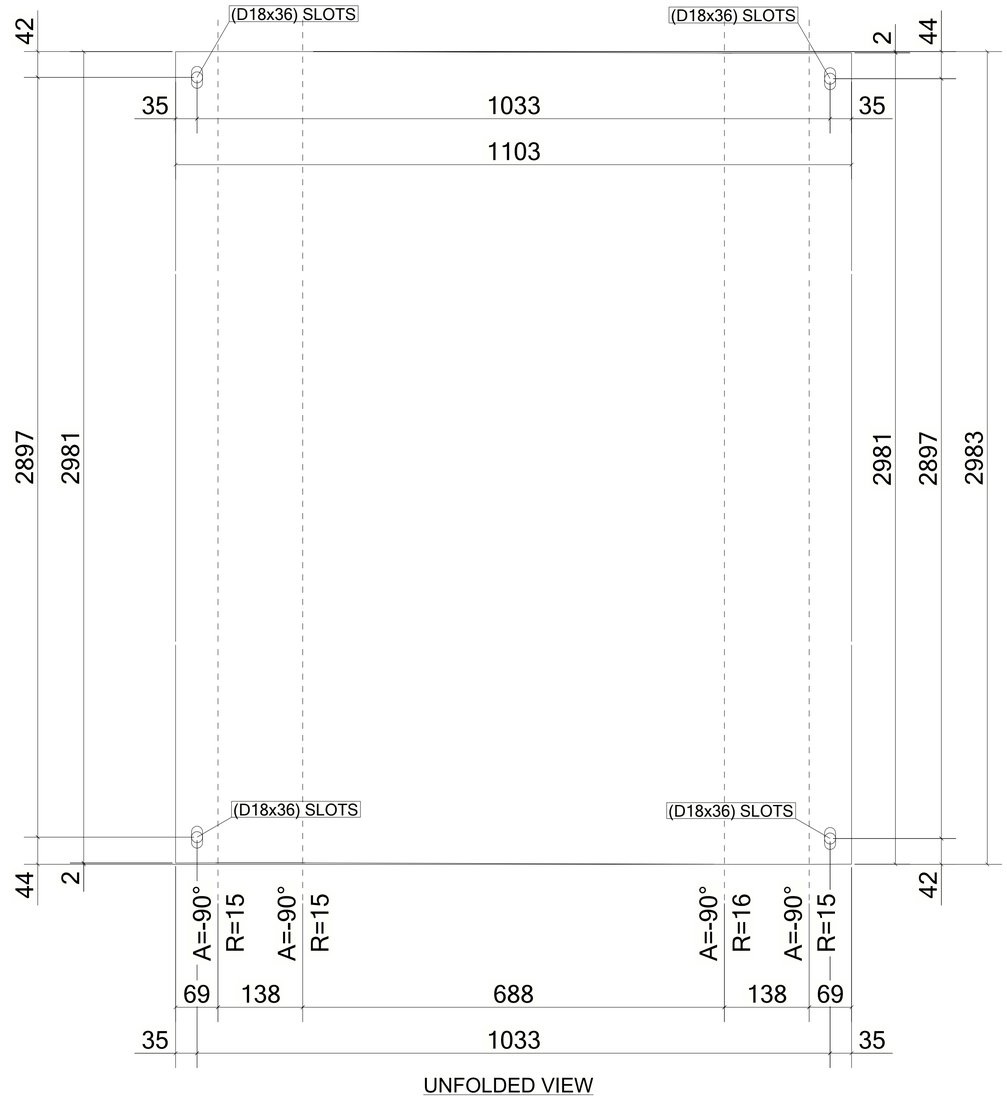

UNFOLDED VIEW

1 *REQUIRED AS DRAWN MARKED* **Z8-CHQ014**

6 October Monorail
Engineering Unit
Valid For Construction

GENERAL NOTES:

1. THE DIMENSIONS SHOWN ARE NOMINAL (IN MILLIMETERS), U.N.O.
2. WELD SIZESHALL BE AISC MINIMUM OF 6 mm UNLESS NOTED OTHERWISE.
3. ALL FIELD WELDS SHALL BE INSPECTED PER QUALITY ASSURANCE AND SPECIAL INSPECTIONS.

REFERENCE DRAWINGS

1	93M-BOA-NAT-LOT-04833
2	93M-BOA-NAT-LOT-09170
3	93M-BOA-NAT-LOT-01976
4	93M-BOA-NAT-LOT-20021
5	
6	
7	
8	
9	

6TH OF OCTOBER CITY RAIL TRANSIT MONORAIL

The Authority | Consultant: Hill International | Main Contractor: ORASCOM CONSTRUCTION, BOMBARDIER | Structural Designer: INNOVA TRANSPORTATION

KEY PLAN:

SCALE: AS SHOWN | SHOPDRAWING | DATE: 12/05/2023

REV	DATE	DSG.	CHK.	APP.	AMENDMENTS	STATUS
B	12/05/2023	M.KH	M.KH	DR.M.M	ISSUED FOR INFORMATION	IFI
A	11/20/2022	M.KH	M.KH	DR.M.M	ISSUED FOR INFORMATION	IFI

DRAWING TITLE
6TH OF OCTOBER MONORAIL
SERVICE WALKWAYS
ZONE (1008)
Z8-CHQ014

Project Code	Rubric	Initiator	Lot	Ref	Number	Revision
93M	047	6ACC	60DEP	DWG	08092	B

Tekla structures

Same comments as
93M-0476-ACC-60DEP-DWG-08079-B.

REVIEWED WITH COMMENT
MONORAILS PROJECT

MATERIAL LIST FOR ASSEMBLY MK'D **Z8-CHQ013**

Mark	Profile	GRADE	No.	Length	Area	Weight
Z8-CHQ013	CHQD5*1103.4	S235JR	1	3091	6.64	129.04
				Total	6.64	129.04

BOLT LIST:-

BOLT \ STUD	BOLT DESCRIPTION	QTY	FINISH
BOLT	B1N2W16 X 50 A325M	4	

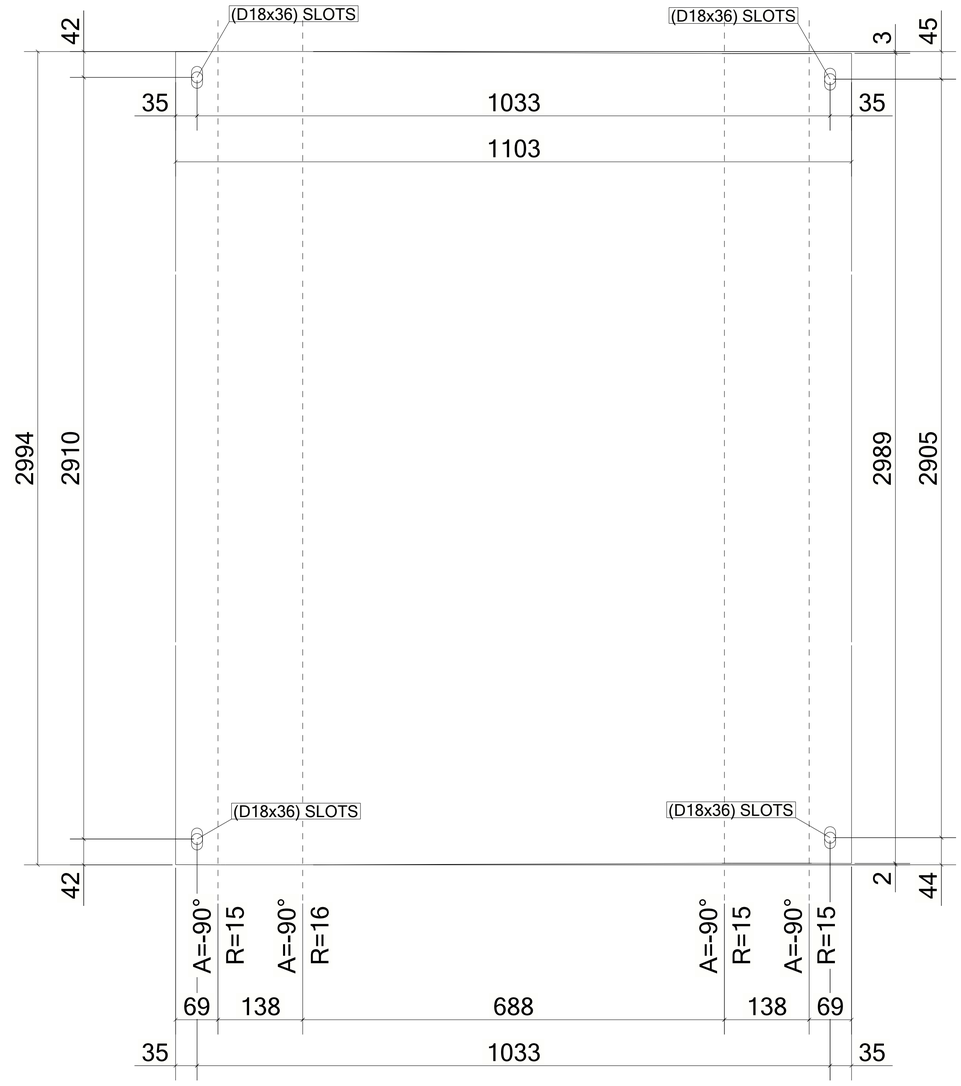

UNFOLDED VIEW

1 *REQUIRED AS DRAWN MARKED* **Z8-CHQ013**

6 October Monorail
Engineering Unit
Valid For Construction

GENERAL NOTES:

1. THE DIMENSIONS SHOWN ARE NOMINAL (IN MILLIMETERS), U.N.O.
2. WELD SIZESHALL BE AISC MINIMUM OF 6 mm UNLESS NOTED OTHERWISE.
3. ALL FIELD WELDS SHALL BE INSPECTED PER QUALITY ASSURANCE AND SPECIAL INSPECTIONS.

REFERENCE DRAWINGS

1	93M-BOA-NAT-LOT-04833
2	93M-BOA-NAT-LOT-09170
3	93M-BOA-NAT-LOT-01976
4	93M-BOA-NAT-LOT-20021
5	
6	
7	
8	
9	

6TH OF OCTOBER CITY RAIL TRANSIT MONORAIL

The Authority | Consultant: Hill International | Main Contractor: ORASCOM CONSTRUCTION / BOMBARDIER | Structural Designer: INNOVA TRANSPORTATION

KEY PLAN:

SCALE	SHOPDRAWING	DATE
AS SHOWN		12/05/2023

REV	DATE	DSG.	CHK.	APP.	AMENDMENTS	STATUS
B	12/05/2023	M.KH	M.KH	DR.M.M	ISSUED FOR INFORMATION	IFI
A	11/20/2022	M.KH	M.KH	DR.M.M	ISSUED FOR INFORMATION	IFI

DRAWING TITLE
6TH OF OCTOBER MONORAIL
SERVICE WALKWAYS
ZONE (1008)
Z8-CHQ013

Project Code	Rubric	Initiator	Lot	Ref	Number	Revision
93M	0476	ACC	60	DEP	DWG-08091	B

Tekla structures

Same comments as
93M-0476-ACC-60DEP-DWG-08079-B.

REVIEWED WITH COMMENT
MONORAILS PROJECT

MATERIAL LIST FOR ASSEMBLY MK'D **Z8-CHQ012**

Mark	Profile	GRADE	No.	Length	Area	Weight
Z8-CHQ012	CHQD5*1103.4	S235JR	1	3092	6.64	129.07
				Total	6.64	129.07

BOLT LIST:-

BOLT \ STUD	BOLT DESCRIPTION		QTY	FINISH
BOLT	B1N2W16 X 50	A325M	4	

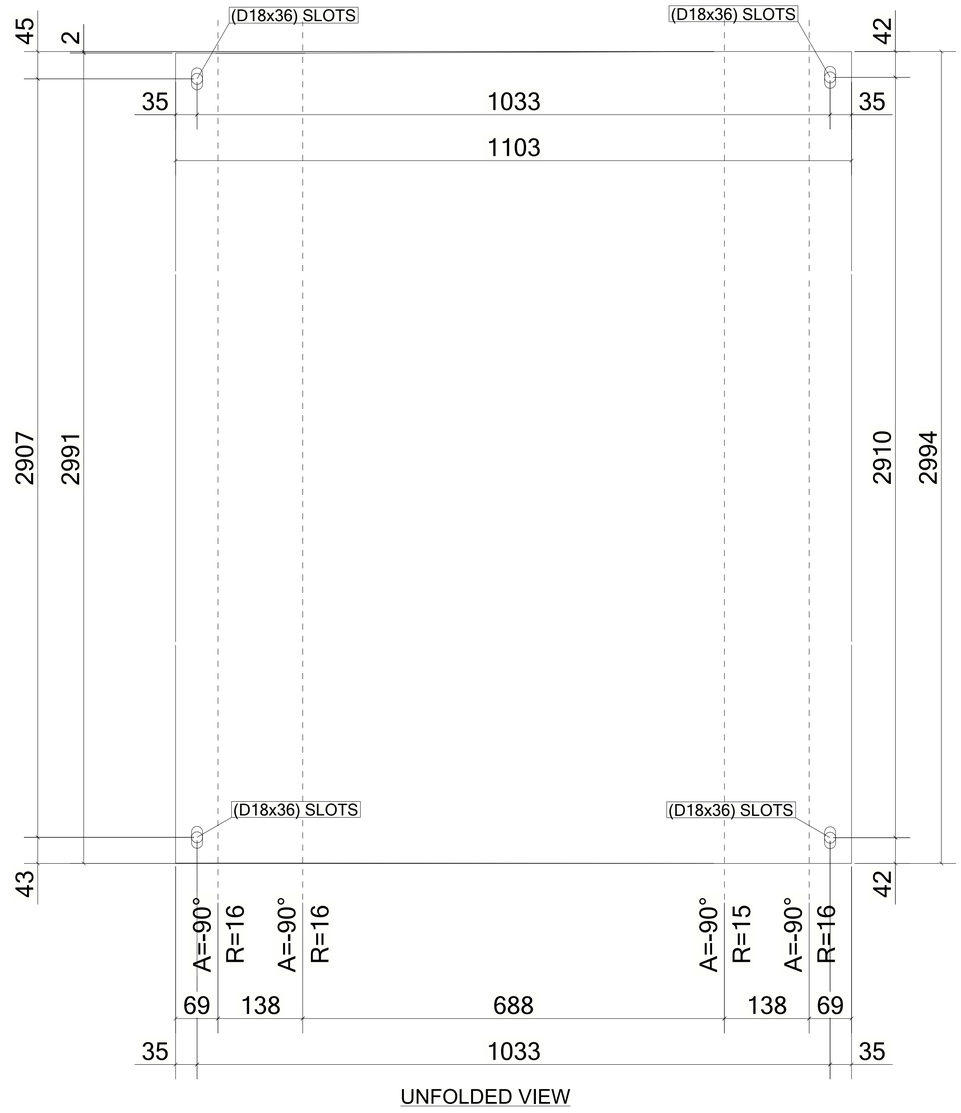

UNFOLDED VIEW

1 *REQUIRED AS DRAWN MARKED* **Z8-CHQ012**

6 October Monorail
Engineering Unit
Valid For Construction

GENERAL NOTES:

1. THE DIMENSIONS SHOWN ARE NOMINAL (IN MILLIMETERS), U.N.O.
2. WELD SIZESHALL BE AISC MINIMUM OF 6 mm UNLESS NOTED OTHERWISE.
3. ALL FIELD WELDS SHALL BE INSPECTED PER QUALITY ASSURANCE AND SPECIAL INSPECTIONS.

REFERENCE DRAWINGS

1	93M-BOA-NAT-LOT-04833
2	93M-BOA-NAT-LOT-09170
3	93M-BOA-NAT-LOT-01976
4	93M-BOA-NAT-LOT-20021
5	
6	
7	
8	
9	

6TH OF OCTOBER CITY RAIL TRANSIT MONORAIL

The Authority — Hill International Consultant — Main Contractor — Structural Designer

KEY PLAN:

SCALE	SHOPDRAWING	DATE
AS SHOWN		12/05/2023

REV	DATE	DSG.	CHK.	APP.	AMENDMENTS	STATUS
B	12/05/2023	M.KH	M.KH	DR.M.M	ISSUED FOR INFORMATION	IFI
A	11/20/2022	M.KH	M.KH	DR.M.M	ISSUED FOR INFORMATION	IFI

DRAWING TITLE
6TH OF OCTOBER MONORAIL
SERVICE WALKWAYS
ZONE (1008)
Z8-CHQ012

Project Code	Rubric	Initiator	Lot	Ref	Number	Revision
93	M047	6ACC	60DE	PDWG	0809	0 B

Tekla structures

Same comments as
93M-0476-ACC-60DEP-DWG-08079-B.

REVIEWED WITH COMMENT
MONORAILS PROJECT

MATERIAL LIST FOR ASSEMBLY MK'D **Z8-CHQ011**

Mark	Profile	GRADE	No.	Length	Area	Weight
Z8-CHQ011	CHQD5*1103.4	S235JR	1	3089	6.63	128.93
				Total	6.63	128.93

BOLT LIST:-

BOLT \ STUD	BOLT DESCRIPTION	QTY	FINISH
BOLT	B1N2W16 X 50 A325M	4	

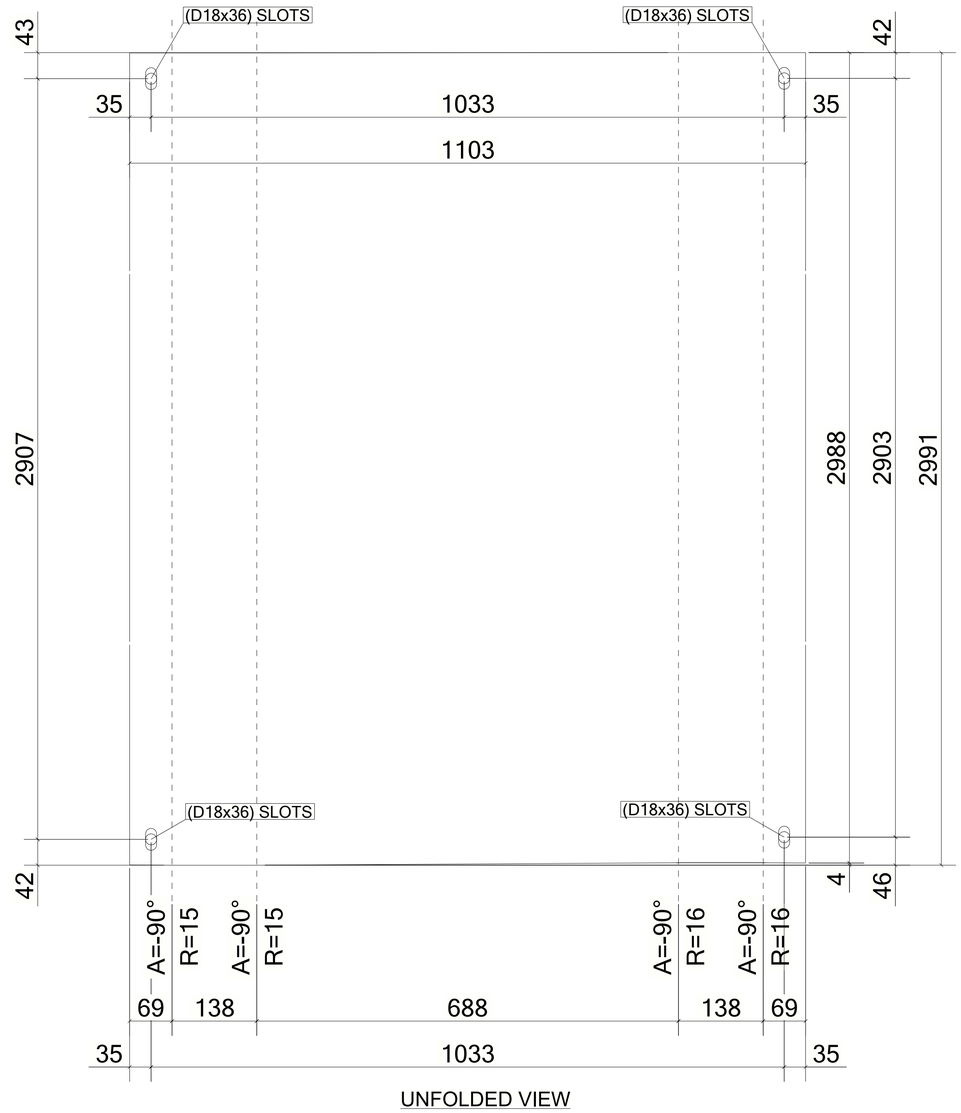

UNFOLDED VIEW

1 *REQUIRED AS DRAWN MARKED* **Z8-CHQ011**

6 October Monorail
Engineering Unit
Valid For Construction

GENERAL NOTES:

1. THE DIMENSIONS SHOWN ARE NOMINAL (IN MILLIMETERS), U.N.O.
2. WELD SIZESHALL BE AISC MINIMUM OF 6 mm UNLESS NOTED OTHERWISE.
3. ALL FIELD WELDS SHALL BE INSPECTED PER QUALITY ASSURANCE AND SPECIAL INSPECTIONS.

REFERENCE DRAWINGS

1	93M-BOA-NAT-LOT-04833
2	93M-BOA-NAT-LOT-09170
3	93M-BOA-NAT-LOT-01976
4	93M-BOA-NAT-LOT-20021
5	
6	
7	
8	
9	

6TH OF OCTOBER CITY RAIL TRANSIT MONORAIL

The Authority | Consultant: Hill International | Main Contractor: ORASCOM CONSTRUCTION, BOMBARDIER | Structural Designer: INNOVA TRANSPORTATION

KEY PLAN:

SCALE: AS SHOWN | SHOPDRAWING | DATE: 12/05/2023

REV	DATE	DSG.	CHK.	APP.	AMENDMENTS	STATUS
B	12/05/2023	M.KH	M.KH	DR.M.M	ISSUED FOR INFORMATION	IFI
A	11/20/2022	M.KH	M.KH	DR.M.M	ISSUED FOR INFORMATION	IFI

DRAWING TITLE
6TH OF OCTOBER MONORAIL
SERVICE WALKWAYS
ZONE (1008)
Z8-CHQ011

Project Code	Rubric	Initiator	Lot	Ref	Number	Revision
93M	047	6ACC	60DEP	DWG	08089	B

Tekla structures

Same comments as
93M-0476-ACC-60DEP-DWG-08079-B.

REVIEWED WITH COMMENT
MONORAILS PROJECT

MATERIAL LIST FOR ASSEMBLY MK'D **Z8-CHQ010**

Mark	Profile	GRADE	No.	Length	Area	Weight
Z8-CHQ010	CHQD5*1103.4	S235JR	1	3094	6.64	129.14
				Total	6.64	129.14

BOLT LIST:-

BOLT \ STUD	BOLT DESCRIPTION	QTY	FINISH
BOLT	B1N2W16 X 50 A325M	4	

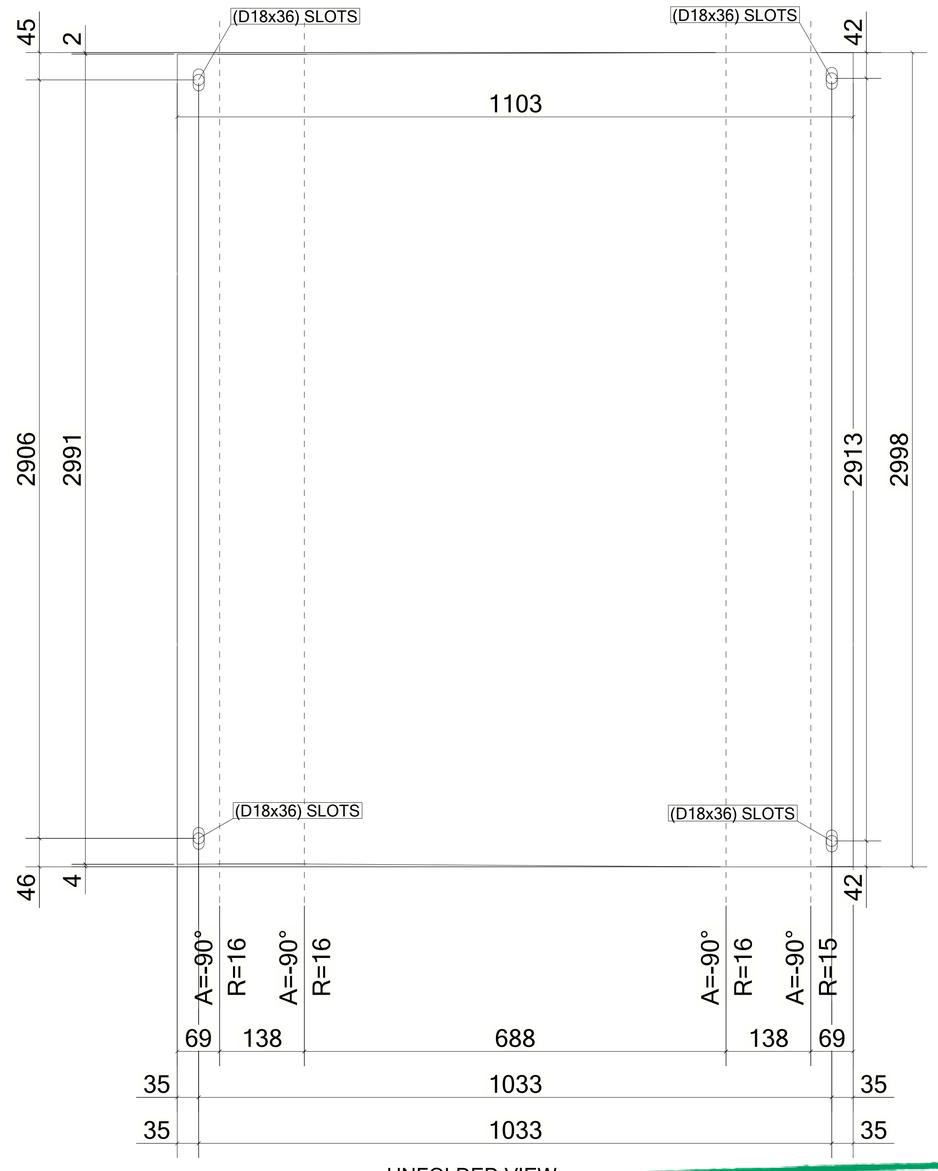

UNFOLDED VIEW

1 *REQUIRED AS DRAWN MARKED* **Z8-CHQ010**

6 October Monorail
Engineering Unit
Valid For Construction

GENERAL NOTES:

1. THE DIMENSIONS SHOWN ARE NOMINAL (IN MILLIMETERS), U.N.O.
2. WELD SIZESHALL BE AISC MINIMUM OF 6 mm UNLESS NOTED OTHERWISE.
3. ALL FIELD WELDS SHALL BE INSPECTED PER QUALITY ASSURANCE AND SPECIAL INSPECTIONS.

REFERENCE DRAWINGS

1	93M-BOA-NAT-LOT-04833
2	93M-BOA-NAT-LOT-09170
3	93M-BOA-NAT-LOT-01976
4	93M-BOA-NAT-LOT-20021
5	
6	
7	
8	
9	

6TH OF OCTOBER CITY RAIL TRANSIT MONORAIL

The Authority | Consultant | Main Contractor | Structural Designer

KEY PLAN:

SCALE	SHOPDRAWING	DATE
AS SHOWN		12/05/2023

REV	DATE	DSG.	CHK.	APP.	AMENDMENTS	STATUS
B	12/05/2023	M.KH	M.KH	DR.M.M	ISSUED FOR INFORMATION	IFI
A	11/20/2022	M.KH	M.KH	DR.M.M	ISSUED FOR INFORMATION	IFI

DRAWING TITLE
6TH OF OCTOBER MONORAIL
SERVICE WALKWAYS
ZONE (1008)
Z8-CHQ010

Project Code	Rubric	Initiator	Lot	Ref	Number	Revision
93M	047	6ACC	60DEP	DWG	08088	B

Tekla structures

Same comments as 93M-0476-ACC-60DEP-DWG-08079-B.

REVIEWED WITH COMMENT
MONORAILS PROJECT

MATERIAL LIST FOR ASSEMBLY MK'D **Z8-CHQ009**

Mark	Profile	GRADE	No.	Length	Area	Weight
Z8-CHQ009	CHQD5*1103.4	S235JR	1	3084	6.62	128.72
				Total	6.62	128.72

BOLT LIST:-

BOLT \ STUD	BOLT DESCRIPTION	QTY	FINISH
BOLT	B1N2W16 X 50 A325M	4	

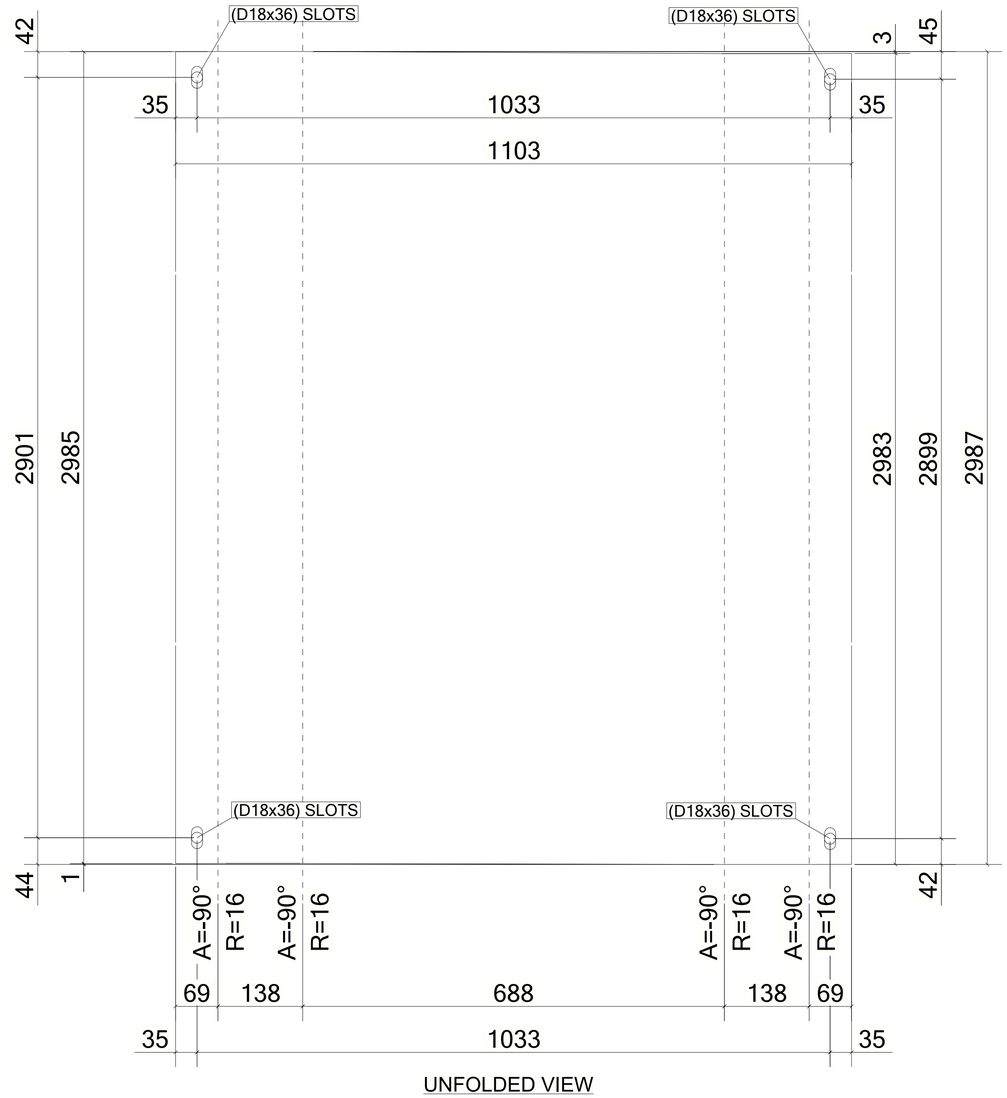

UNFOLDED VIEW

1 *REQUIRED AS DRAWN MARKED* **Z8-CHQ009**

6 October Monorail
Engineering Unit
Valid For Construction

GENERAL NOTES:

1. THE DIMENSIONS SHOWN ARE NOMINAL (IN MILLIMETERS), U.N.O.
2. WELD SIZESHALL BE AISC MINIMUM OF 6 mm UNLESS NOTED OTHERWISE.
3. ALL FIELD WELDS SHALL BE INSPECTED PER QUALITY ASSURANCE AND SPECIAL INSPECTIONS.

REFERENCE DRAWINGS

1	93M-BOA-NAT-LOT-04833
2	93M-BOA-NAT-LOT-09170
3	93M-BOA-NAT-LOT-01976
4	93M-BOA-NAT-LOT-20021
5	
6	
7	
8	
9	

6TH OF OCTOBER CITY RAIL TRANSIT MONORAIL

The Authority | Consultant: Hill International | Main Contractor: ORASCOM CONSTRUCTION / BOMBARDIER | Structural Designer: INNOVA TRANSPORTATION

KEY PLAN:

SCALE	SHOPDRAWING	DATE
AS SHOWN		12/05/2023

REV	DATE	DSG.	CHK.	APP.	AMENDMENTS	STATUS
B	12/05/2023	M.KH	M.KH	DR.M.M	ISSUED FOR INFORMATION	IFI
A	11/20/2022	M.KH	M.KH	DR.M.M	ISSUED FOR INFORMATION	IFI

DRAWING TITLE
6TH OF OCTOBER MONORAIL
SERVICE WALKWAYS
ZONE (1008)
Z8-CHQ009

Project Code	Rubric	Initiator	Lot	Ref	Number	Revision
93	M047	6ACC	60DE	PDWG	08087	B

Tekla structures

Same comments as 93M-0476-ACC-60DEP-DWG-08079-B.

REVIEWED WITH COMMENT
MONORAILS PROJECT

MATERIAL LIST FOR ASSEMBLY MK'D **Z8-CHQ008**

Mark	Profile	GRADE	No.	Length	Area	Weight
Z8-CHQ008	CHQD5*1103.4	S235JR	1	3093	6.64	129.11
				Total	6.64	129.11

BOLT LIST:-

BOLT \ STUD	BOLT DESCRIPTION	QTY	FINISH
BOLT	B1N2W16 X 50 A325M	4	

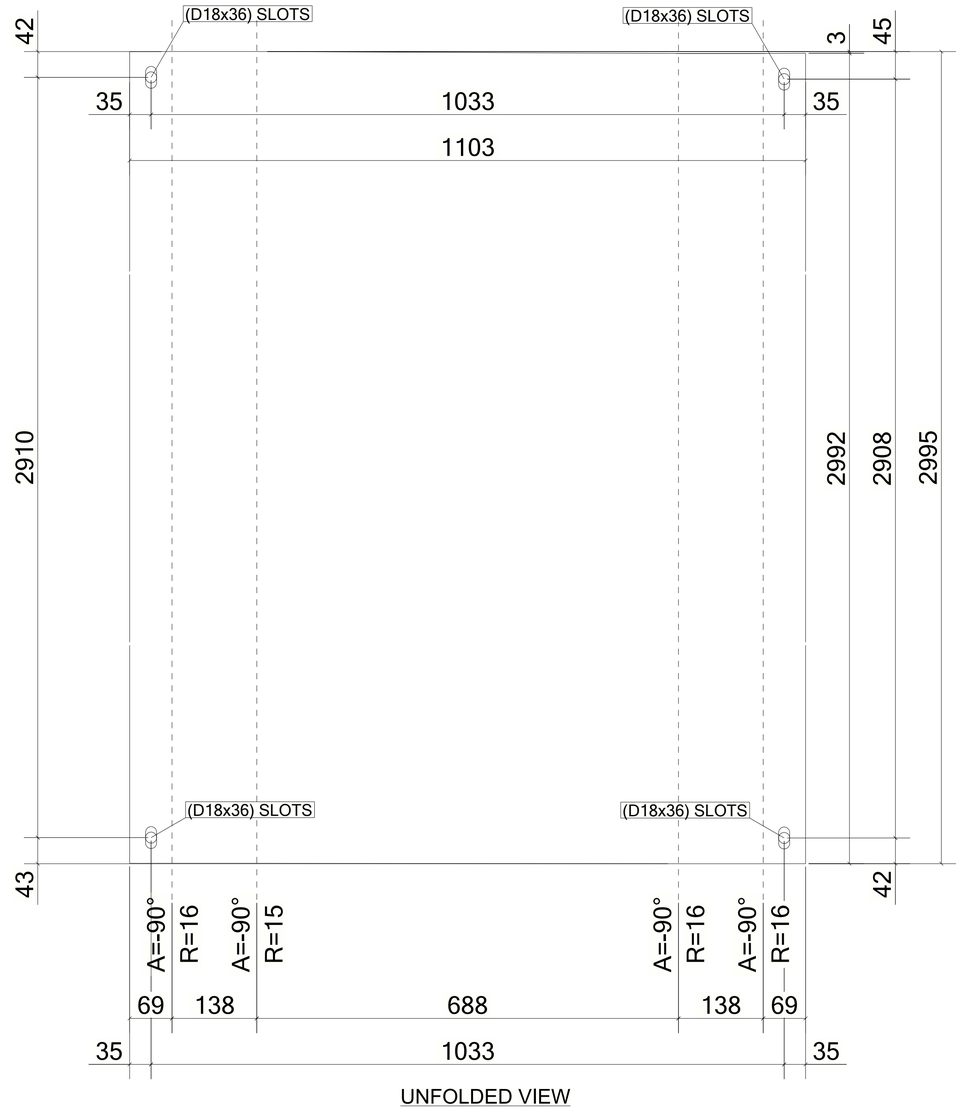

UNFOLDED VIEW

1 *REQUIRED AS DRAWN MARKED* **Z8-CHQ008**

6 October Monorail
Engineering Unit
Valid For Construction

GENERAL NOTES:

1. THE DIMENSIONS SHOWN ARE NOMINAL (IN MILLIMETERS), U.N.O.
2. WELD SIZESHALL BE AISC MINIMUM OF 6 mm UNLESS NOTED OTHERWISE.
3. ALL FIELD WELDS SHALL BE INSPECTED PER QUALITY ASSURANCE AND SPECIAL INSPECTIONS.

REFERENCE DRAWINGS

1	93M-BOA-NAT-LOT-04833
2	93M-BOA-NAT-LOT-09170
3	93M-BOA-NAT-LOT-01976
4	93M-BOA-NAT-LOT-20021
5	
6	
7	
8	
9	

6TH OF OCTOBER CITY RAIL TRANSIT MONORAIL

The Authority | Hill International Consultant | Main Contractor | Structural Designer

KEY PLAN:

SCALE	SHOPDRAWING	DATE
AS SHOWN		12/05/2023

REV	DATE	DSG.	CHK.	APP.	AMENDMENTS	STATUS
B	12/05/2023	M.KH	M.KH	DR.M.M	ISSUED FOR INFORMATION	IFI
A	11/20/2022	M.KH	M.KH	DR.M.M	ISSUED FOR INFORMATION	IFI

DRAWING TITLE
6TH OF OCTOBER MONORAIL
SERVICE WALKWAYS
ZONE (1008)
Z8-CHQ008

Project Code	Rubric	Initiator	Lot	Ref	Number	Revision
93M	047	6ACC	60DEP	DWG	08086	B

Tekla structures

Same comments as
93M-0476-ACC-60DEP-DWG-08079-B.

REVIEWED WITH COMMENT
MONORAILS PROJECT

MATERIAL LIST FOR ASSEMBLY MK'D **Z8-CHQ007**

Mark	Profile	GRADE	No.	Length	Area	Weight
Z8-CHQ007	CHQD5*1103.4	S235JR	1	2092	4.42	85.96
				Total	4.42	85.96

BOLT LIST:-

BOLT \ STUD	BOLT DESCRIPTION	QTY	FINISH
BOLT	B1N2W16 X 50 A325M	4	

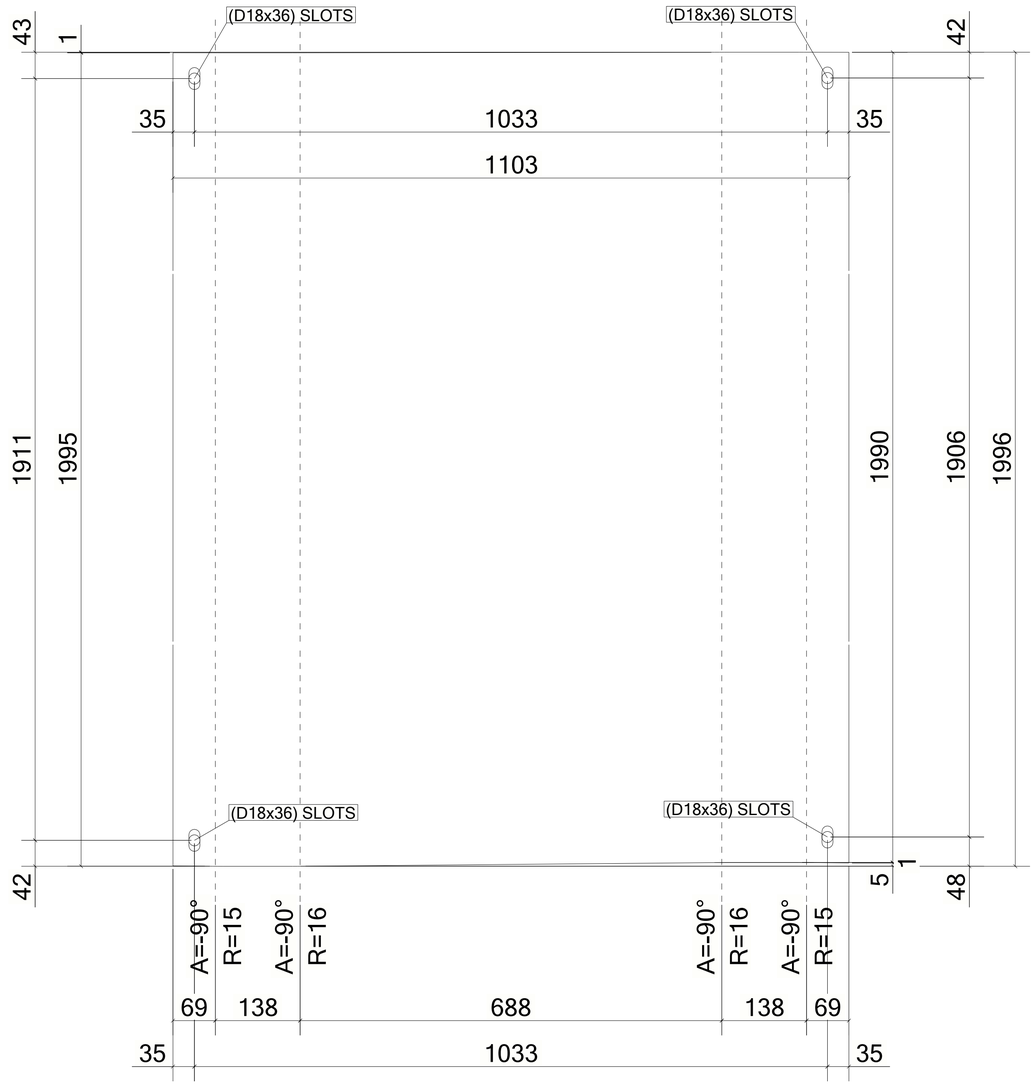

UNFOLDED VIEW

1 *REQUIRED AS DRAWN MARKED* **Z8-CHQ007**

6 October Monorail
Engineering Unit
Valid For Construction

GENERAL NOTES:

1. THE DIMENSIONS SHOWN ARE NOMINAL (IN MILLIMETERS), U.N.O.
2. WELD SIZESHALL BE AISC MINIMUM OF 6 mm UNLESS NOTED OTHERWISE.
3. ALL FIELD WELDS SHALL BE INSPECTED PER QUALITY ASSURANCE AND SPECIAL INSPECTIONS.

REFERENCE DRAWINGS

1	93M-BOA-NAT-LOT-04833
2	93M-BOA-NAT-LOT-09170
3	93M-BOA-NAT-LOT-01976
4	93M-BOA-NAT-LOT-20021
5	
6	
7	
8	
9	

6TH OF OCTOBER CITY RAIL TRANSIT MONORAIL

The Authority — Consultant — Main Contractor — Structural Designer

KEY PLAN:

SCALE	SHOPDRAWING	DATE
AS SHOWN		12/05/2023

REV	DATE	DSG.	CHK.	APP.	AMENDMENTS	STATUS
B	12/05/2023	M.KH	M.KH	DR.M.M	ISSUED FOR INFORMATION	IFI
A	11/20/2022	M.KH	M.KH	DR.M.M	ISSUED FOR INFORMATION	IFI

DRAWING TITLE
6TH OF OCTOBER MONORAIL
SERVICE WALKWAYS
ZONE (1008)
Z8-CHQ007

Project Code	Rubric	Initiator	Lot	Ref	Number	Revision
93M	0476	ACC	60	DEP	DWG 08085	B

Tekla structures

Same comments as 93M-0476-ACC-60DEP-DWG-08079-B.

REVIEWED WITH COMMENT
MONORAILS PROJECT

MATERIAL LIST FOR ASSEMBLY MK'D **Z8-CHQ006**

Mark	Profile	GRADE	No.	Length	Area	Weight
Z8-CHQ006	CHQD5*1103.4	S235JR	1	2087	4.41	85.70
				Total	4.41	85.70

BOLT LIST:-

BOLT \ STUD	BOLT DESCRIPTION	QTY	FINISH
BOLT	B1N2W 16 X 50 A325M	4	

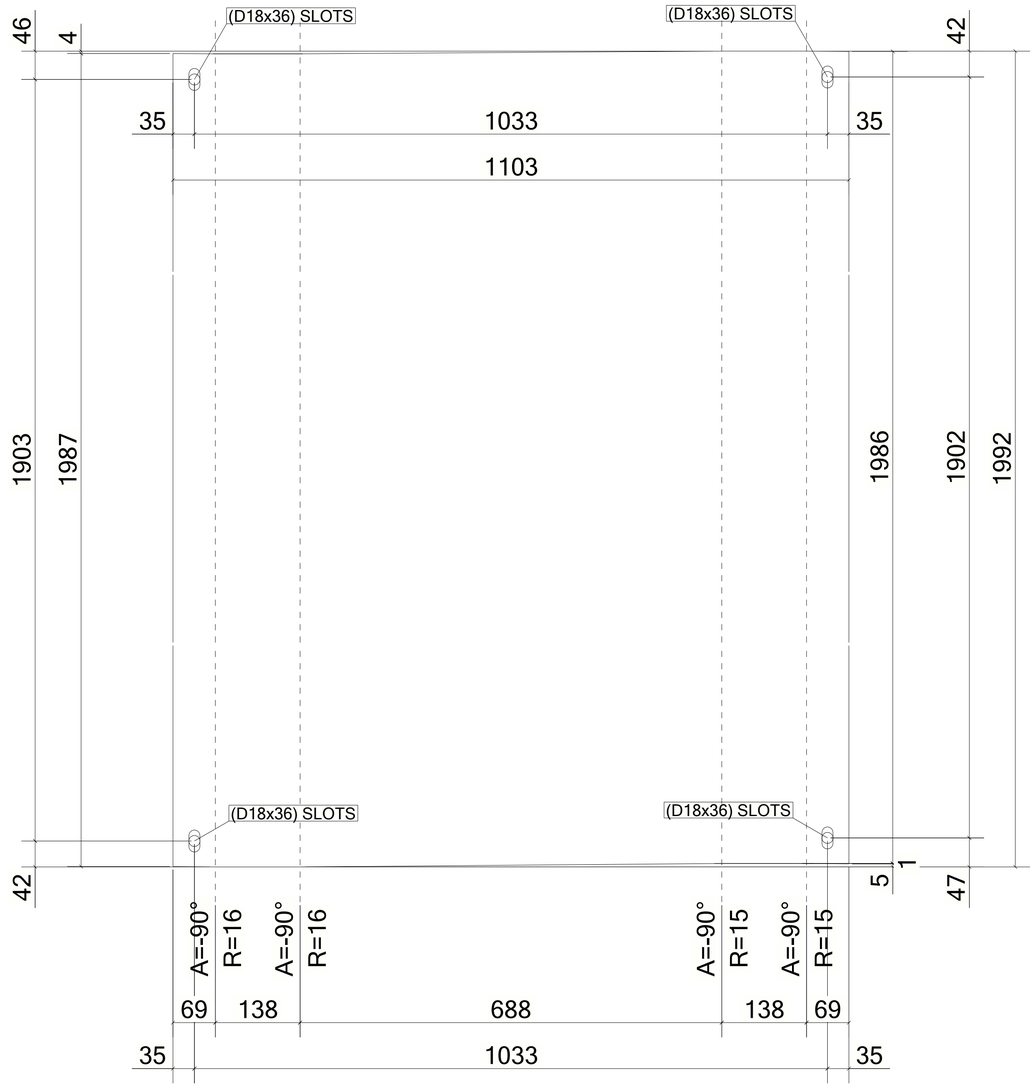

UNFOLDED VIEW

1 *REQUIRED AS DRAWN MARKED* **Z8-CHQ006**

6 October Monorail
Engineering Unit
Valid For Construction

GENERAL NOTES:

1. THE DIMENSIONS SHOWN ARE NOMINAL (IN MILLIMETERS), U.N.O.
2. WELD SIZESHALL BE AISC MINIMUM OF 6 mm UNLESS NOTED OTHERWISE.
3. ALL FIELD WELDS SHALL BE INSPECTED PER QUALITY ASSURANCE AND SPECIAL INSPECTIONS.

REFERENCE DRAWINGS

1	93M-BOA-NAT-LOT-04833
2	93M-BOA-NAT-LOT-09170
3	93M-BOA-NAT-LOT-01976
4	93M-BOA-NAT-LOT-20021
5	
6	
7	
8	
9	

6TH OF OCTOBER CITY RAIL TRANSIT MONORAIL

The Authority | Hill International Consultant | Main Contractor | Structural Designer

KEY PLAN:

SCALE: AS SHOWN | SHOPDRAWING | DATE: 12/05/2023

REV	DATE	DSG.	CHK.	APP.	AMENDMENTS	STATUS
B	12/05/2023	M.KH	M.KH	DR.M.M	ISSUED FOR INFORMATION	IFI
A	11/20/2022	M.KH	M.KH	DR.M.M	ISSUED FOR INFORMATION	IFI

DRAWING TITLE
6TH OF OCTOBER MONORAIL
SERVICE WALKWAYS
ZONE (1008)
Z8-CHQ006

Project Code	Rubric	Initiator	Lot	Ref	Number	Revision
93M	047	6ACC	60DEP	DWG	08084	B

Tekla structures

Same comments as 93M-0476-ACC-60DEP-DWG-08079-B.

REVIEWED WITH COMMENT
MONORAILS PROJECT

MATERIAL LIST FOR ASSEMBLY MK'D **Z8-CHQ005**

Mark	Profile	GRADE	No.	Length	Area	Weight
Z8-CHQ005	CHQD5*1103.4	S235JR	1	2089	4.41	85.77
				Total	4.41	85.77

BOLT LIST:-

BOLT \ STUD	BOLT DESCRIPTION	QTY	FINISH
BOLT	B1N2W16 X 50 A325M	4	

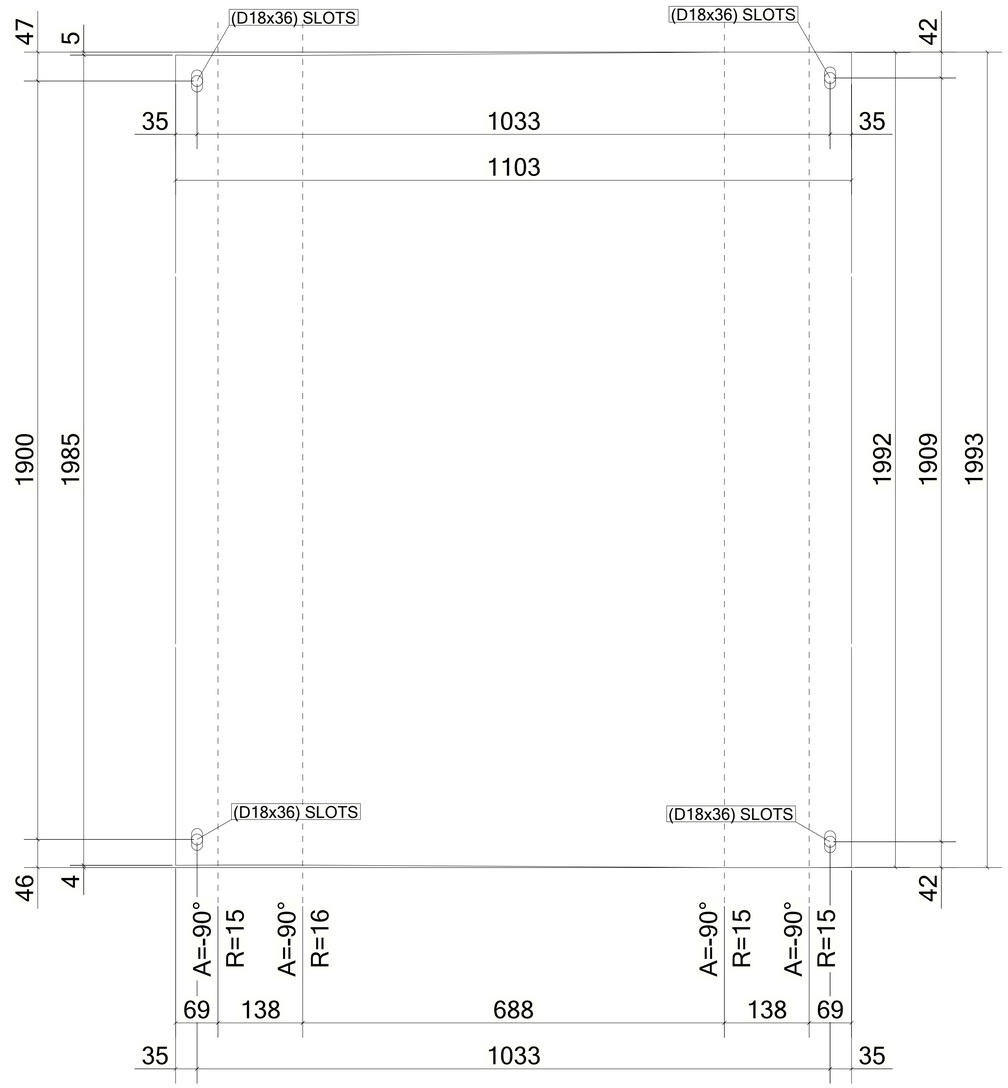

UNFOLDED VIEW

1 *REQUIRED AS DRAWN MARKED* **Z8-CHQ005**

6 October Monorail
Engineering Unit
Valid For Construction

GENERAL NOTES:

1. THE DIMENSIONS SHOWN ARE NOMINAL (IN MILLIMETERS), U.N.O.
2. WELD SIZESHALL BE AISC MINIMUM OF 6 mm UNLESS NOTED OTHERWISE.
3. ALL FIELD WELDS SHALL BE INSPECTED PER QUALITY ASSURANCE AND SPECIAL INSPECTIONS.

REFERENCE DRAWINGS

1	93M-BOA-NAT-LOT-04833
2	93M-BOA-NAT-LOT-09170
3	93M-BOA-NAT-LOT-01976
4	93M-BOA-NAT-LOT-20021
5	
6	
7	
8	
9	

6TH OF OCTOBER CITY RAIL TRANSIT MONORAIL

The Authority — Hill International Consultant — Main Contractor — Structural Designer

KEY PLAN:

SCALE	SHOPDRAWING	DATE
AS SHOWN		12/05/2023

REV	DATE	DSG.	CHK.	APP.	AMENDMENTS	STATUS
B	12/05/2023	M.KH	M.KH	DR.M.M	ISSUED FOR INFORMATION	IFI
A	11/20/2022	M.KH	M.KH	DR.M.M	ISSUED FOR INFORMATION	IFI

DRAWING TITLE
6TH OF OCTOBER MONORAIL
SERVICE WALKWAYS
ZONE (1008)
Z8-CHQ005

Project Code	Rubric	Initiator	Lot	Ref	Number	Revision
93	M04	76	ACC60	DEP	DWG0808	B

Tekla structures

Same comments as
93M-0476-ACC-60DEP-DWG-08079-B.

REVIEWED WITH COMMENT
MONORAILS PROJECT

MATERIAL LIST FOR ASSEMBLY MK'D **Z8-CHQ004**

Mark	Profile	GRADE	No.	Length	Area	Weight
Z8-CHQ004	CHQD5*1103.4	S235JR	1	3095	6.64	129.21
				Total	6.64	129.21

BOLT LIST:-

BOLT \ STUD	BOLT DESCRIPTION	QTY	FINISH
BOLT	B1N2W16 X 50 A325M	4	

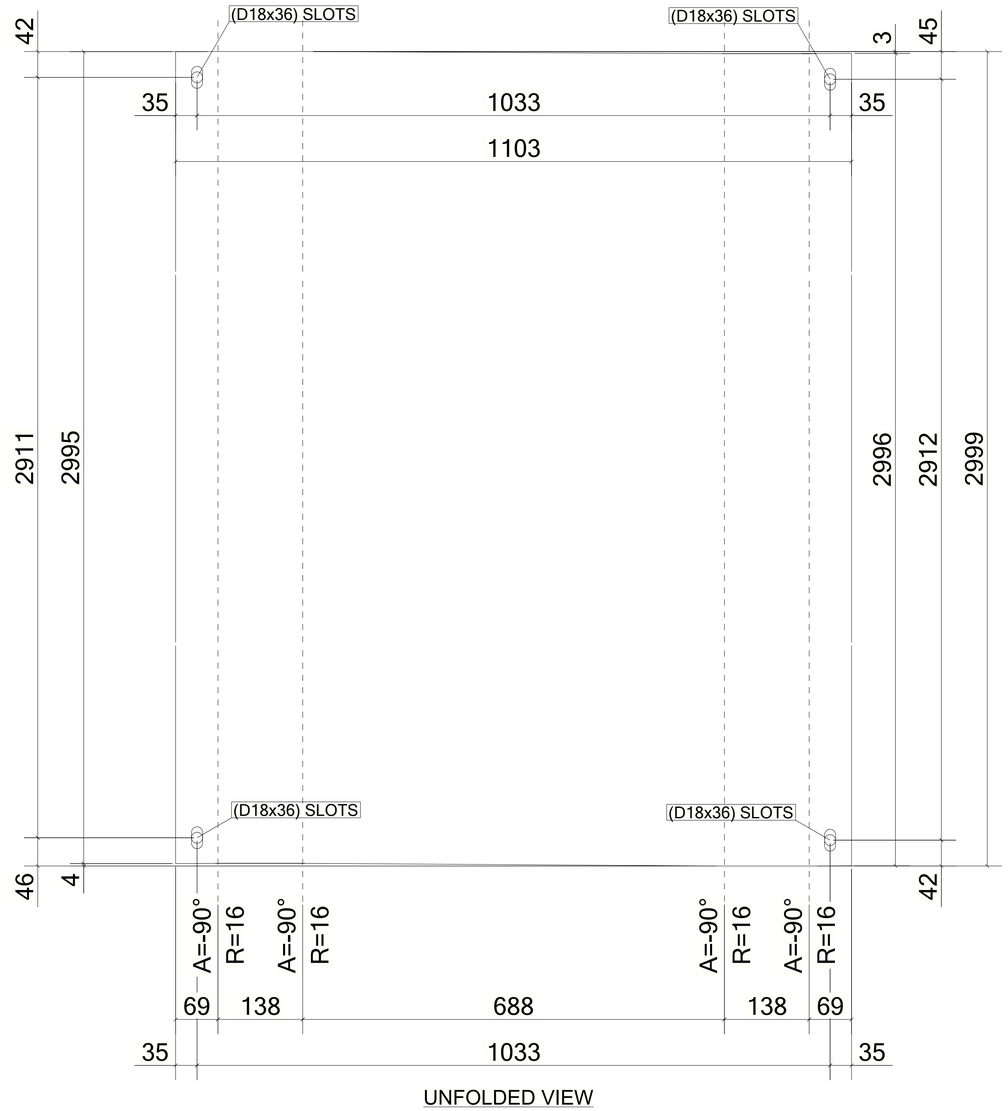

UNFOLDED VIEW

1 *REQUIRED AS DRAWN MARKED* **Z8-CHQ004**

6 October Monorail
Engineering Unit
Valid For Construction

GENERAL NOTES:

1. THE DIMENSIONS SHOWN ARE NOMINAL (IN MILLIMETERS), U.N.O.
2. WELD SIZESHALL BE AISC MINIMUM OF 6 mm UNLESS NOTED OTHERWISE.
3. ALL FIELD WELDS SHALL BE INSPECTED PER QUALITY ASSURANCE AND SPECIAL INSPECTIONS.

REFERENCE DRAWINGS

1	93M-BOA-NAT-LOT-04833
2	93M-BOA-NAT-LOT-09170
3	93M-BOA-NAT-LOT-01976
4	93M-BOA-NAT-LOT-20021
5	
6	
7	
8	
9	

6TH OF OCTOBER CITY RAIL TRANSIT MONORAIL

The Authority | Consultant: Hill International | Main Contractor: ORASCOM CONSTRUCTION / BOMBARDIER | Structural Designer: INNOVA TRANSPORTATION

KEY PLAN:

SCALE: AS SHOWN | SHOPDRAWING | DATE: 12/05/2023

REV	DATE	DSG.	CHK.	APP.	AMENDMENTS	STATUS
B	12/05/2023	M.KH	M.KH	DR.M.M	ISSUED FOR INFORMATION	IFI
A	11/20/2022	M.KH	M.KH	DR.M.M	ISSUED FOR INFORMATION	IFI

DRAWING TITLE
6TH OF OCTOBER MONORAIL
SERVICE WALKWAYS
ZONE (1008)
Z8-CHQ004

Project Code	Rubric	Initiator	Lot	Ref	Number	Revision
93M	047	6ACC	60DE	PDWG	0808	2 B

Tekla structures

Same comments as
93M-0476-ACC-60DEP-DWG-08079-B.

REVIEWED WITH COMMENT
MONORAILS PROJECT

MATERIAL LIST FOR ASSEMBLY MK'D **Z8-CHQ003**

Mark	Profile	GRADE	No.	Length	Area	Weight
Z8-CHQ003	CHQD5*1103.4	S235JR	1	3083	6.62	128.69
				Total	6.62	128.69

BOLT LIST:-

BOLT \ STUD	BOLT DESCRIPTION	QTY	FINISH
BOLT	B1N2W16 X 50 A325M	4	

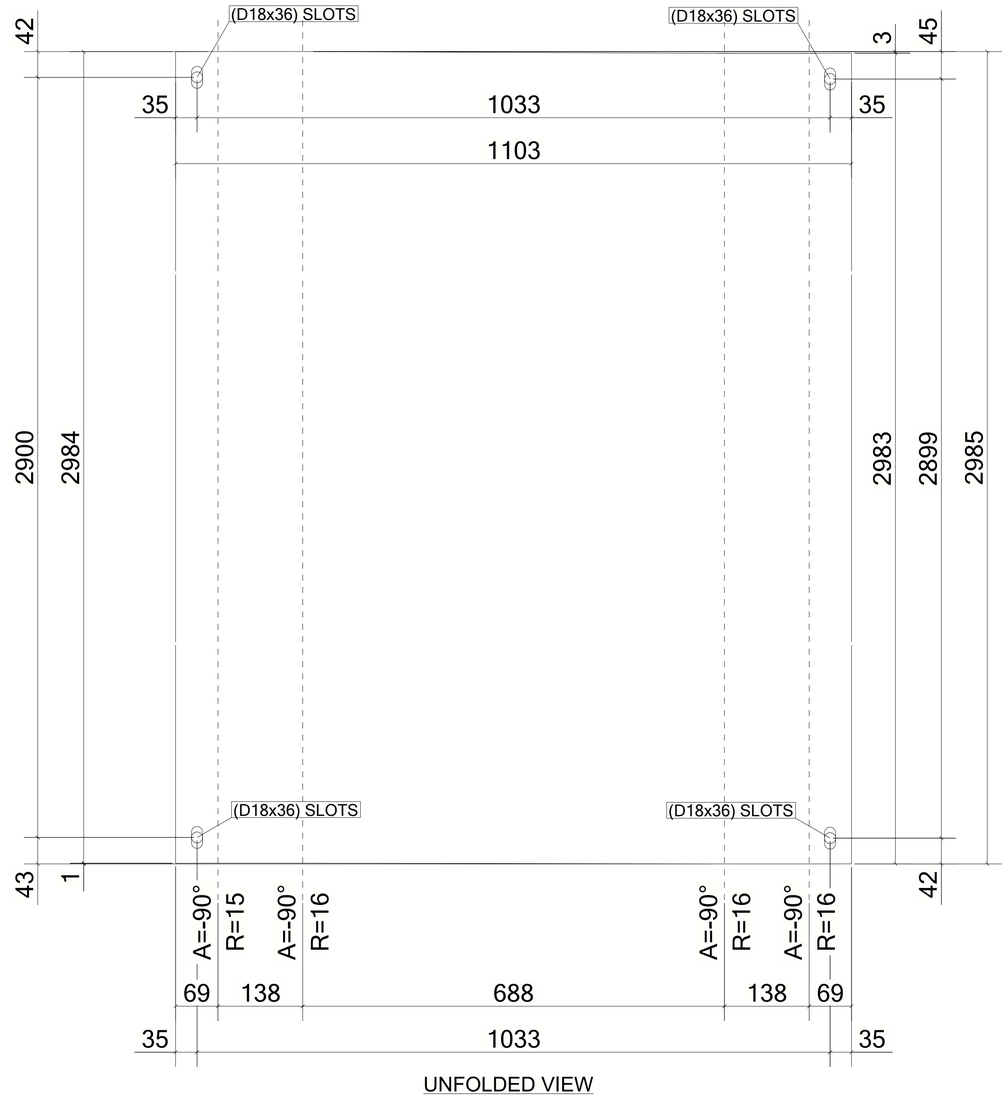

UNFOLDED VIEW

1 *REQUIRED AS DRAWN MARKED* **Z8-CHQ003**

6 October: Monorail
Engineering Unit
Valid For Construction

GENERAL NOTES:

1. THE DIMENSIONS SHOWN ARE NOMINAL (IN MILLIMETERS), U.N.O.
2. WELD SIZESHALL BE AISC MINIMUM OF 6 mm UNLESS NOTED OTHERWISE.
3. ALL FIELD WELDS SHALL BE INSPECTED PER QUALITY ASSURANCE AND SPECIAL INSPECTIONS.

REFERENCE DRAWINGS

1	93M-BOA-NAT-LOT-04833
2	93M-BOA-NAT-LOT-09170
3	93M-BOA-NAT-LOT-01976
4	93M-BOA-NAT-LOT-20021
5	
6	
7	
8	
9	

6TH OF OCTOBER CITY RAIL TRANSIT MONORAIL

The Authority | Consultant: Hill International | Main Contractor: ORASCOM CONSTRUCTION / BOMBARDIER | Structural Designer: INNOVA TRANSPORTATION

KEY PLAN:

SCALE: AS SHOWN | SHOPDRAWING | DATE: 12/05/2023

REV	DATE	DSG.	CHK.	APP.	AMENDMENTS	STATUS
B	12/05/2023	M.KH	M.KH	DR.M.M	ISSUED FOR INFORMATION	IFI
A	11/20/2022	M.KH	M.KH	DR.M.M	ISSUED FOR INFORMATION	IFI

DRAWING TITLE
6TH OF OCTOBER MONORAIL
SERVICE WALKWAYS
ZONE (1008)
Z8-CHQ003

Project Code	Rubric	Initiator	Lot	Ref	Number	Revision
93	M047	6ACC	60	DEP	DWG0808	1 B

Tekla structures

Same comments as
93M-0476-ACC-60DEP-DWG-08079-B.

REVIEWED WITH COMMENT
MONORAILS PROJECT

MATERIAL LIST FOR ASSEMBLY MK'D **Z8-CHQ002**

Mark	Profile	GRADE	No.	Length	Area	Weight
Z8-CHQ002	CHQD5*1103.4	S235JR	1	3090	6.63	128.97
				Total	6.63	128.97

BOLT LIST:-

BOLT \ STUD	BOLT DESCRIPTION	QTY	FINISH
BOLT	B1N2W16 X 50 A325M	4	

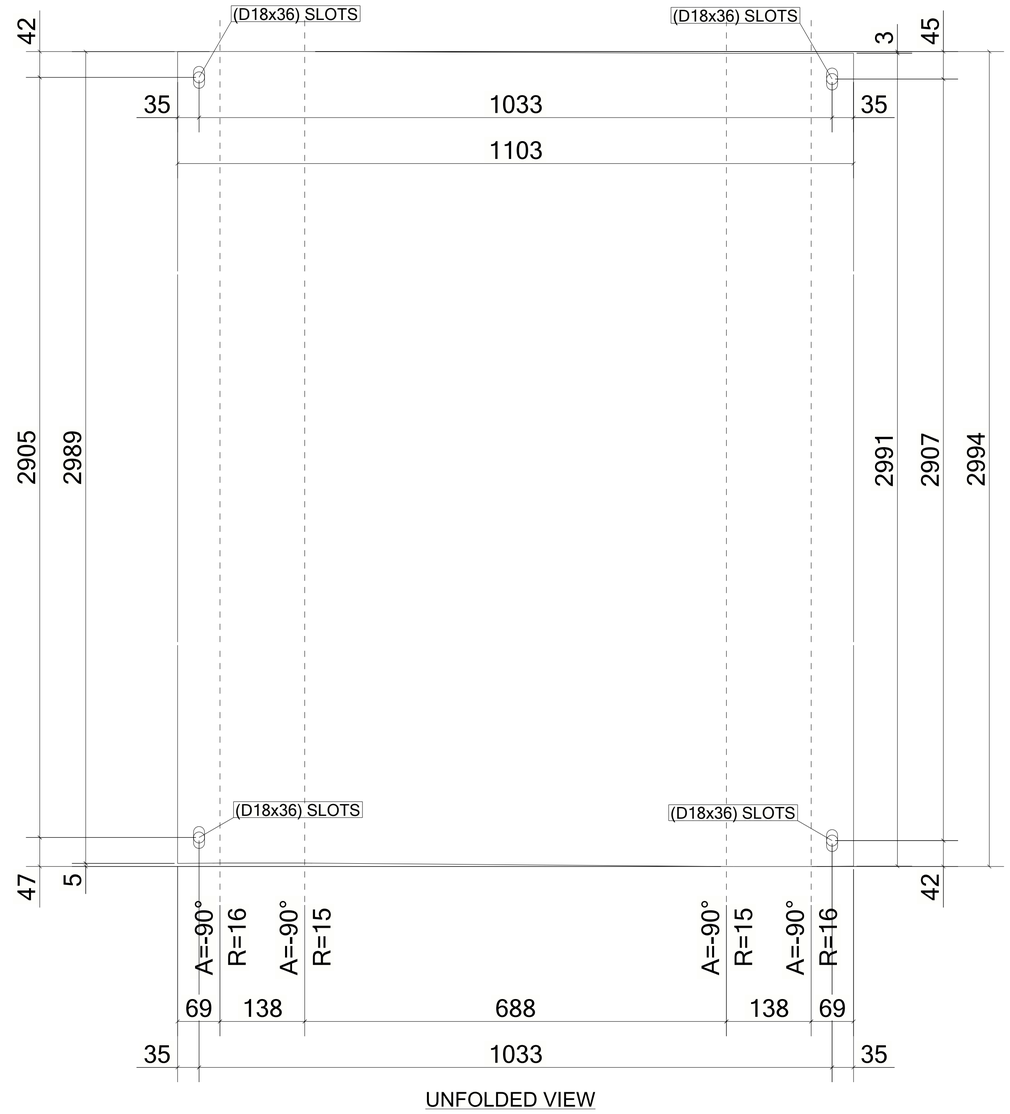

UNFOLDED VIEW

3 *REQUIRED AS DRAWN MARKED* **Z8-CHQ002**

6 October: Monorail
Engineering Unit
Valid For Construction

GENERAL NOTES:

1. THE DIMENSIONS SHOWN ARE NOMINAL (IN MILLIMETERS), U.N.O.
2. WELD SIZESHALL BE AISC MINIMUM OF 6 mm UNLESS NOTED OTHERWISE.
3. ALL FIELD WELDS SHALL BE INSPECTED PER QUALITY ASSURANCE AND SPECIAL INSPECTIONS.

REFERENCE DRAWINGS

1	93M-BOA-NAT-LOT-04833
2	93M-BOA-NAT-LOT-09170
3	93M-BOA-NAT-LOT-01976
4	93M-BOA-NAT-LOT-20021
5	
6	
7	
8	
9	

6TH OF OCTOBER CITY RAIL TRANSIT MONORAIL

The Authority — Hill International Consultant — Main Contractor — Structural Designer

KEY PLAN:

SCALE	SHOPDRAWING	DATE
AS SHOWN		12/05/2023

REV	DATE	DSG.	CHK.	APP.	AMENDMENTS	STATUS
B	12/05/2023	M.KH	M.KH	DR.M.M	ISSUED FOR INFORMATION	IFI
A	11/20/2022	M.KH	M.KH	DR.M.M	ISSUED FOR INFORMATION	IFI

DRAWING TITLE
6TH OF OCTOBER MONORAIL
SERVICE WALKWAYS
ZONE (1008)
Z8-CHQ002

Project Code	Rubric	Initiator	Lot	Ref	Number	Revision
93M	047	6ACC	60DE	PDWG	0808	B

Tekla structures

The slot should be short slot a shown in the design reference which is (18*22) according to ANSI/AISC 360-05.

B. BOLTING SCHEDULE:

ITEM	BOLT SIZE	HOLE TYPE & ORIENTATION	NOTES
SW PLANK	M16	SHORT SLOT, LONGITUDINAL	
STAIR RAIL	M16	STD	

TABLE J3.3M
Nominal Hole Dimensions, mm

Bolt Diameter	Hole Dimensions			
	Standard (Dia.)	Oversize (Dia.)	Short-Slot (Width × Length)	Long-Slot (Width × Length)
M16	18	20	18 × 22	18 × 40
M20	22	24	22 × 26	22 × 50
M22	24	28	24 × 30	24 × 55
M24	27 [a]	30	27 × 32	27 × 60
M27	30	35	30 × 37	30 × 67
M30	33	38	33 × 40	33 × 75
≥M36	$d+3$	$d+8$	$(d+3)\times(d+10)$	$(d+3)\times 2.5d$

[a] Clearance provided allows the use of a 1-in. bolt if desirable.

MATERIAL LIST FOR ASSEMBLY MK'D **Z8-CHQ001**

Mark	Profile	GRADE	No.	Length	Area	Weight
Z8-CHQ001	CHQD5*1103.4	S235JR	1	3092	6.64	129.08
				Total	6.64	129.08

BOLT LIST:-

BOLT \ STUD	BOLT DESCRIPTION		QTY	FINISH
BOLT	B1N2W16 X 40	A325M	2	
BOLT	B1N2W16 X 50	A325M	2	

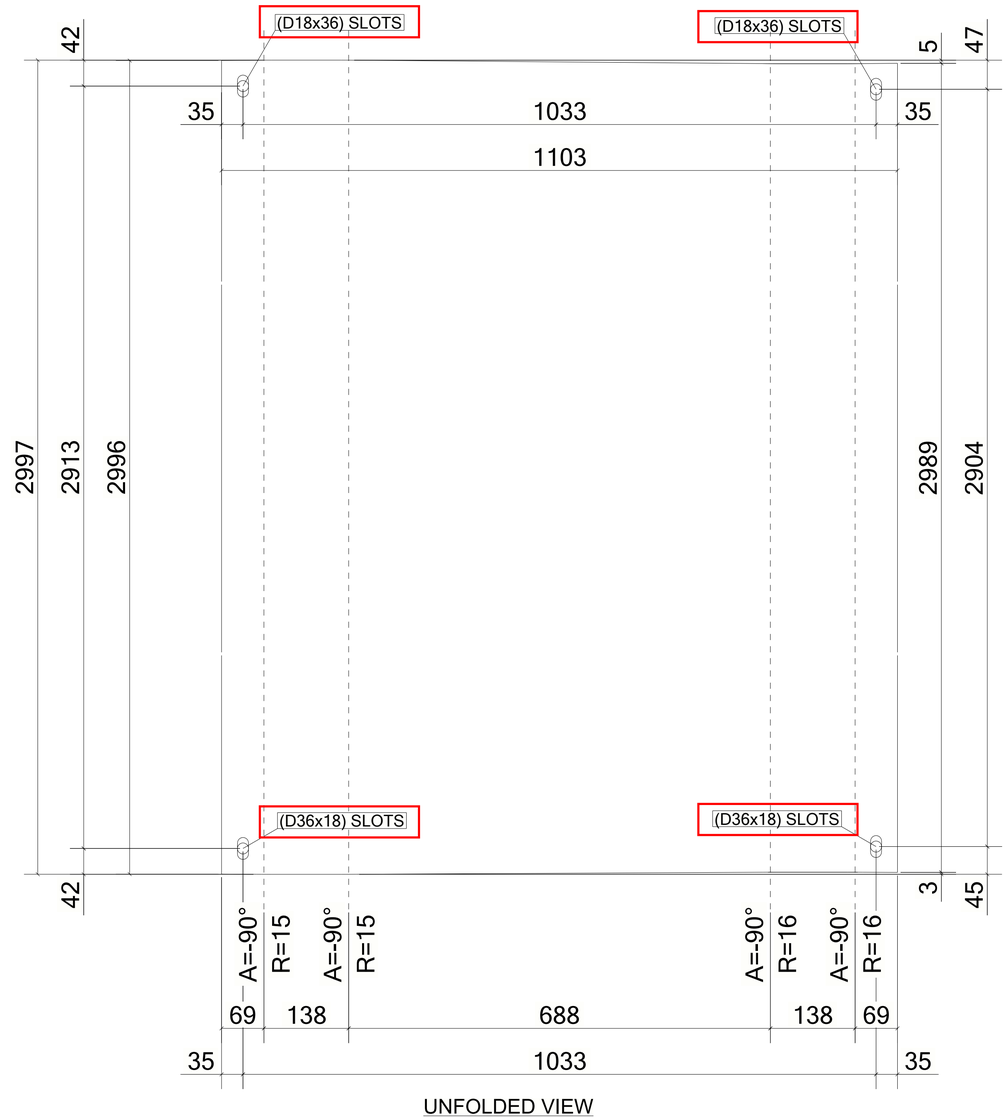

UNFOLDED VIEW

1 *REQUIRED AS DRAWN MARKED* **Z8-CHQ001**

6 October Monorail
Engineering Unit
Valid For Construction

GENERAL NOTES:

1. THE DIMENSIONS SHOWN ARE NOMINAL (IN MILLIMETERS), U.N.O.
2. WELD SIZESHALL BE AISC MINIMUM OF 6 mm UNLESS NOTED OTHERWISE.
3. ALL FIELD WELDS SHALL BE INSPECTED PER QUALITY ASSURANCE AND SPECIAL INSPECTIONS.

REFERENCE DRAWINGS

1	93M-BOA-NAT-LOT-04833
2	93M-BOA-NAT-LOT-09170
3	93M-BOA-NAT-LOT-01976
4	93M-BOA-NAT-LOT-20021
5	
6	
7	
8	
9	

6TH OF OCTOBER CITY RAIL TRANSIT MONORAIL

The Authority — Hill International Consultant — Main Contractor — Structural Designer

KEY PLAN:

SCALE	SHOPDRAWING	DATE
AS SHOWN		12/05/2023

REV	DATE	DSG.	CHK.	APP.	AMENDMENTS	STATUS
B	12/05/2023	MAH	MAH	DR.M.M	ISSUED FOR INFORMATION	IFI
A	11/20/2022	MAH	MAH	DR.M.M	ISSUED FOR INFORMATION	IFI

DRAWING TITLE
6TH OF OCTOBER MONORAIL
SERVICE WALKWAYS
ZONE (1008)
Z8-CHQ001

Project Code	Rubric	Initiator	Lot	Ref	Number	Revision
93	M047	6ACC	60DE	PDWG	0807	B

Tekla structures

Approval is subject to approval of coordination package between multi-discipline.

REVIEWED WITH COMMENT MONORAILS PROJECT

MATERIAL LIST FOR ASSEMBLY MK'D **Z8-BR058**

Mark	Profile	GRADE	No.	Length	Area	Weight
Z8-BR058	L70X70X7	S235JR	1	979	0.27	7.23
W818	PL8*50	S355JR	1	70	0.01	0.22
				Total	0.28	7.45

BOLT LIST:-

BOLT \ STUD	BOLT DESCRIPTION	QTY	FINISH
BOLT	B1N2W 16 X 50 A325M	1	

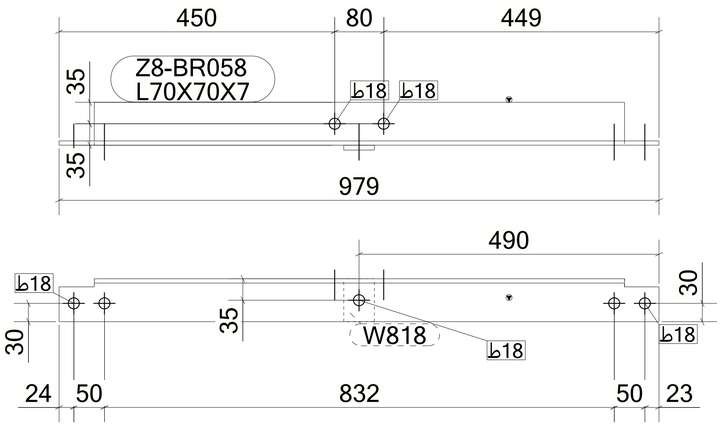

1 *REQUIRED AS DRAWN MARKED* **Z8-BR058**

6 October Monorail Engineering Unit
Valid For Construction

GENERAL NOTES:

1. THE DIMENSIONS SHOWN ARE NOMINAL (IN MILLIMETERS), U.N.O.
2. WELD SIZESHALL BE AISC MINIMUM OF 6 mm UNLESS NOTED OTHERWISE.
3. ALL FIELD WELDS SHALL BE INSPECTED PER QUALITY ASSURANCE AND SPECIAL INSPECTIONS.

REFERENCE DRAWINGS

1	93M-BOA-NAT-LOT-04833
2	93M-BOA-NAT-LOT-09170
3	93M-BOA-NAT-LOT-01976
4	93M-BOA-NAT-LOT-20021
5	
6	
7	
8	
9	

6TH OF OCTOBER CITY RAIL TRANSIT MONORAIL

The Authority | Hill International Consultant | ORASCOM BOMBARDIER Main Contractor | INNOVA Structural Designer

KEY PLAN:

SCALE	SHOPDRAWING	DATE
AS SHOWN		12/05/2023

REV	DATE	DSG.	CHK.	APP.	AMENDMENTS	STATUS
B	12/05/2023	M.KH	M.KH	DR.M.M	ISSUED FOR INFORMATION	IFI
A	11/20/2022	M.KH	M.KH	DR.M.M	ISSUED FOR INFORMATION	IFI

DRAWING TITLE
6TH OF OCTOBER MONORAIL SERVICE WALKWAYS ZONE (1008)
Z8-BR058

Project Code	Rubric	Initiator	Lot	Ref	Number	Revision
93M	0476	ACC	60DEP	DWG	08078	B

Tekla structures

Approval is subject to approval of coordination package between multi-discipline.

REVIEWED WITH COMMENT
MONORAILS PROJECT

MATERIAL LIST FOR ASSEMBLY MK'D **Z8-BR057**

Mark	Profile	GRADE	No.	Length	Area	Weight
Z8-BR057	L80*8	S235JR	1	3470	1.11	33.12
				Total	1.11	33.12

BOLT LIST:-

BOLT \ STUD	BOLT DESCRIPTION	QTY	FINISH
BOLT	B1N2W 16 X 50 A325M	4	

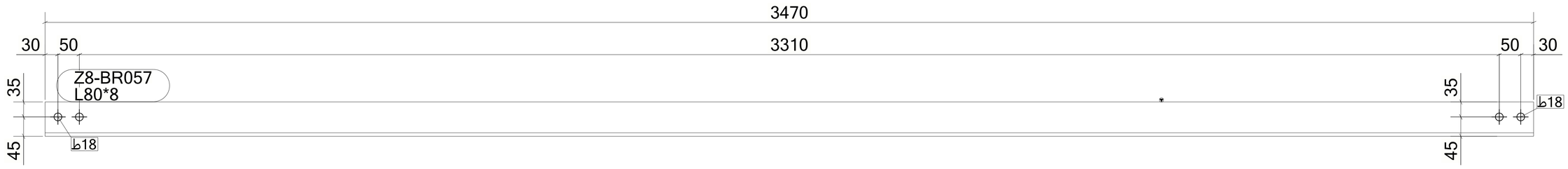

1 *REQUIRED AS DRAWN MARKED* **Z8-BR057**

6 October Monorail
Engineering Unit
Valid For Construction

GENERAL NOTES:

1. THE DIMENSIONS SHOWN ARE NOMINAL (IN MILLIMETERS), U.N.O.
2. WELD SIZESHALL BE AISC MINIMUM OF 6 mm UNLESS NOTED OTHERWISE.
3. ALL FIELD WELDS SHALL BE INSPECTED PER QUALITY ASSURANCE AND SPECIAL INSPECTIONS.

REFERENCE DRAWINGS

1	93M-BOA-NAT-LOT-04833
2	93M-BOA-NAT-LOT-09170
3	93M-BOA-NAT-LOT-01976
4	93M-BOA-NAT-LOT-20021
5	
6	
7	
8	
9	

6TH OF OCTOBER CITY RAIL TRANSIT MONORAIL

The Authority | Consultant: Hill International | Main Contractor: ORASCOM CONSTRUCTION, BOMBARDIER | Structural Designer: INNOVA TRANSPORTATION

KEY PLAN:

SCALE	SHOPDRAWING	DATE
AS SHOWN		12/05/2023

REV	DATE	DSG.	CHK.	APP.	AMENDMENTS	STATUS
B	12/05/2023	M.KH	M.KH	DR.M.M	ISSUED FOR INFORMATION	IFI
A	11/20/2022	M.KH	M.KH	DR.M.M	ISSUED FOR INFORMATION	IFI

DRAWING TITLE
6TH OF OCTOBER MONORAIL
SERVICE WALKWAYS
ZONE (1008)
Z8-BR057

Project Code	Rubric	Initiator	Lot	Ref	Number	Revision
9 3 M 0 4 7 6	A C C	6 0 D E P	D W G	0 8 0 7 7		B

Tekla structures

Approval is subject to approval of coordination package between multi-discipline.

REVIEWED WITH COMMENT
MONORAILS PROJECT

MATERIAL LIST FOR ASSEMBLY MK'D **Z8-BR056**

Mark	Profile	GRADE	No.	Length	Area	Weight
Z8-BR056	L80*8	S235JR	1	3493	1.12	33.35
				Total	1.12	33.35

BOLT LIST:-

BOLT \ STUD	BOLT DESCRIPTION	QTY	FINISH
BOLT	B1N2W 16 X 50 A325M	4	

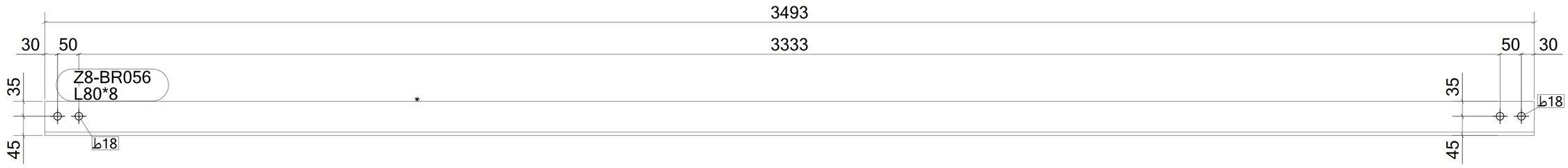

1 *REQUIRED AS DRAWN MARKED* **Z8-BR056**

6 October Monorail
Engineering Unit
Valid For Construction

GENERAL NOTES:

1. THE DIMENSIONS SHOWN ARE NOMINAL (IN MILLIMETERS), U.N.O.
2. WELD SIZESHALL BE AISC MINIMUM OF 6 mm UNLESS NOTED OTHERWISE.
3. ALL FIELD WELDS SHALL BE INSPECTED PER QUALITY ASSURANCE AND SPECIAL INSPECTIONS.

REFERENCE DRAWINGS

1	93M-BOA-NAT-LOT-04833
2	93M-BOA-NAT-LOT-09170
3	93M-BOA-NAT-LOT-01976
4	93M-BOA-NAT-LOT-20021
5	
6	
7	
8	
9	

6TH OF OCTOBER CITY RAIL TRANSIT MONORAIL

The Authority | Consultant: Hill International | Main Contractor: ORASCOM CONSTRUCTION, BOMBARDIER | Structural Designer: INNOVA TRANSPORTATION

KEY PLAN:

SCALE: AS SHOWN | SHOPDRAWING | DATE: 12/05/2023

REV	DATE	DSG.	CHK.	APP.	AMENDMENTS	STATUS
B	12/05/2023	M.KH	M.KH	DR.M.M	ISSUED FOR INFORMATION	IFI
A	11/20/2022	M.KH	M.KH	DR.M.M	ISSUED FOR INFORMATION	IFI

DRAWING TITLE
6TH OF OCTOBER MONORAIL
SERVICE WALKWAYS
ZONE (1008)
Z8-BR056

Project Code	Rubric	Initiator	Lot	Ref	Number	Revision
9 3 M 0 4 7 6	A C C	6 0 D E P	D W G	0 8 0 7 6		B

Tekla structures

Approval is subject to approval of coordination package between multi-discipline.

REVIEWED WITH COMMENT
MONORAILS PROJECT

MATERIAL LIST FOR ASSEMBLY MK'D **Z8-BR055**

Mark	Profile	GRADE	No.	Length	Area	Weight
Z8-BR055	L80*8	S235JR	1	3473	1.11	33.15
				Total	1.11	33.15

BOLT LIST:-

BOLT \ STUD	BOLT DESCRIPTION	QTY	FINISH
BOLT	B1N2W 16 X 50 A325M	4	

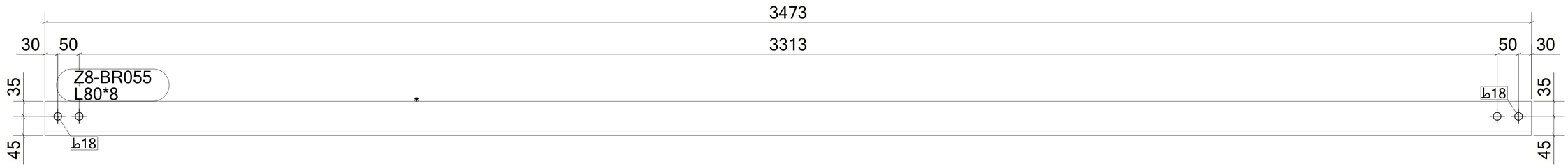

1 *REQUIRED AS DRAWN MARKED* **Z8-BR055**

6 October Monorail
Engineering Unit
Valid For Construction

GENERAL NOTES:

1. THE DIMENSIONS SHOWN ARE NOMINAL (IN MILLIMETERS), U.N.O.
2. WELD SIZESHALL BE AISC MINIMUM OF 6 mm UNLESS NOTED OTHERWISE.
3. ALL FIELD WELDS SHALL BE INSPECTED PER QUALITY ASSURANCE AND SPECIAL INSPECTIONS.

REFERENCE DRAWINGS

1	93M-BOA-NAT-LOT-04833
2	93M-BOA-NAT-LOT-09170
3	93M-BOA-NAT-LOT-01976
4	93M-BOA-NAT-LOT-20021
5	
6	
7	
8	
9	

6TH OF OCTOBER CITY RAIL TRANSIT MONORAIL

The Authority | Hill International Consultant | ORASCOM / BOMBARDIER Main Contractor | INNOVA TRANSPORTATION Structural Designer

KEY PLAN:

SCALE: AS SHOWN | SHOPDRAWING | DATE: 12/05/2023

REV	DATE	DSG.	CHK.	APP.	AMENDMENTS	STATUS
B	12/05/2023	M.KH	M.KH	DR.M.M	ISSUED FOR INFORMATION	IFI
A	11/20/2022	M.KH	M.KH	DR.M.M	ISSUED FOR INFORMATION	IFI

DRAWING TITLE
6TH OF OCTOBER MONORAIL
SERVICE WALKWAYS
ZONE (1008)
Z8-BR055

Project Code	Rubric	Initiator	Lot	Ref	Number	Revision
9 3 M	0 4 7 6	A C C	6 0 D E P	D W G	0 8 0 7 5	B

Tekla structures

Approval is subject to approval of coordination package between multi-discipline.

REVIEWED WITH COMMENT
MONORAILS PROJECT

MATERIAL LIST FOR ASSEMBLY MK'D **Z8-BR054**

Mark	Profile	GRADE	No.	Length	Area	Weight
Z8-BR054	L80*8	S235JR	1	3475	1.11	33.17
				Total	1.11	33.17

BOLT LIST:-

BOLT \ STUD	BOLT DESCRIPTION	QTY	FINISH
BOLT	B1N2W 16 X 50 A325M	4	

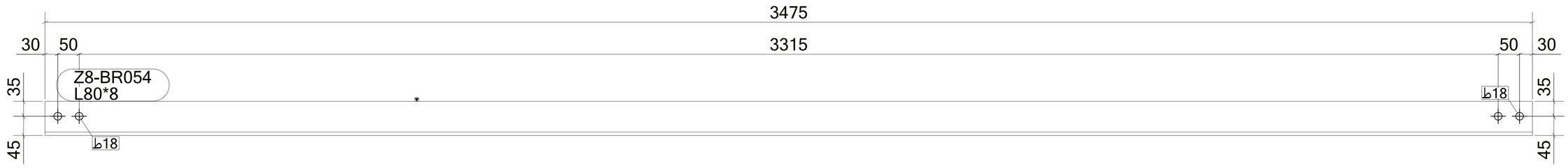

1 *REQUIRED AS DRAWN MARKED* **Z8-BR054**

6 October Monorail
Engineering Unit
Valid For Construction

GENERAL NOTES:

1. THE DIMENSIONS SHOWN ARE NOMINAL (IN MILLIMETERS), U.N.O.
2. WELD SIZESHALL BE AISC MINIMUM OF 6 mm UNLESS NOTED OTHERWISE.
3. ALL FIELD WELDS SHALL BE INSPECTED PER QUALITY ASSURANCE AND SPECIAL INSPECTIONS.

REFERENCE DRAWINGS

1	93M-BOA-NAT-LOT-04833
2	93M-BOA-NAT-LOT-09170
3	93M-BOA-NAT-LOT-01976
4	93M-BOA-NAT-LOT-20021
5	
6	
7	
8	
9	

6TH OF OCTOBER CITY RAIL TRANSIT MONORAIL

The Authority | Consultant: Hill International | Main Contractor: ORASCOM CONSTRUCTION, BOMBARDIER | Structural Designer: INNOVA TRANSPORTATION

KEY PLAN:

SCALE: AS SHOWN | SHOPDRAWING | DATE: 12/05/2023

REV	DATE	DSG.	CHK.	APP.	AMENDMENTS	STATUS
B	12/05/2023	M.KH	M.KH	DR.M.M	ISSUED FOR INFORMATION	IFI
A	11/20/2022	M.KH	M.KH	DR.M.M	ISSUED FOR INFORMATION	IFI

DRAWING TITLE
6TH OF OCTOBER MONORAIL
SERVICE WALKWAYS
ZONE (1008)
Z8-BR054

Project Code	Rubric	Initiator	Lot	Ref	Number	Revision
9 3 M 0	4 7 6	A C C	6 0 D E P	D W G	0 8 0 7 4	B

Tekla structures

Approval is subject to approval of coordination package between multi-discipline.

REVIEWED WITH COMMENT
MONORAILS PROJECT

MATERIAL LIST FOR ASSEMBLY MK'D **Z8-BR053**

Mark	Profile	GRADE	No.	Length	Area	Weight
Z8-BR053	L80*8	S235JR	1	3475	1.11	33.17
				Total	1.11	33.17

BOLT LIST:-

BOLT \ STUD	BOLT DESCRIPTION	QTY	FINISH
BOLT	B1N2W 16 X 50 A325M	4	

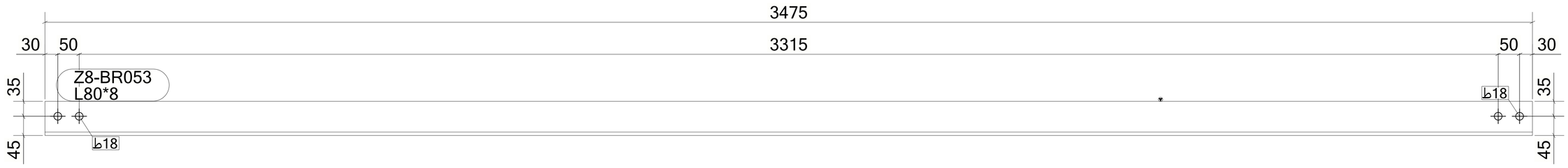

2 *REQUIRED AS DRAWN MARKED* **Z8-BR053**

6 October Monorail
Engineering Unit
Valid For Construction

GENERAL NOTES:

1. THE DIMENSIONS SHOWN ARE NOMINAL (IN MILLIMETERS), U.N.O.
2. WELD SIZESHALL BE AISC MINIMUM OF 6 mm UNLESS NOTED OTHERWISE.
3. ALL FIELD WELDS SHALL BE INSPECTED PER QUALITY ASSURANCE AND SPECIAL INSPECTIONS.

REFERENCE DRAWINGS

1	93M-BOA-NAT-LOT-04833
2	93M-BOA-NAT-LOT-09170
3	93M-BOA-NAT-LOT-01976
4	93M-BOA-NAT-LOT-20021
5	
6	
7	
8	
9	

6TH OF OCTOBER CITY RAIL TRANSIT MONORAIL

The Authority | Consultant: Hill International | Main Contractor: ORASCOM CONSTRUCTION, BOMBARDIER | Structural Designer: INNOVA TRANSPORTATION

KEY PLAN:

SCALE: AS SHOWN | SHOPDRAWING | DATE: 12/05/2023

REV	DATE	DSG.	CHK.	APP.	AMENDMENTS	STATUS
B	12/05/2023	M.KH	M.KH	DR.M.M	ISSUED FOR INFORMATION	IFI
A	11/20/2022	M.KH	M.KH	DR.M.M	ISSUED FOR INFORMATION	IFI

DRAWING TITLE
6TH OF OCTOBER MONORAIL
SERVICE WALKWAYS
ZONE (1008)
Z8-BR053

Project Code	Rubric	Initiator	Lot	Ref	Number	Revision
93M0476	ACC60DEP	DWG	0807	3		B

Tekla structures

Approval is subject to approval of coordination package between multi-discipline.

REVIEWED WITH COMMENT
MONORAILS PROJECT

MATERIAL LIST FOR ASSEMBLY MK'D **Z8-BR052**

Mark	Profile	GRADE	No.	Length	Area	Weight
Z8-BR052	L80*8	S235JR	1	3490	1.12	33.31
				Total	1.12	33.31

BOLT LIST:-

BOLT \ STUD	BOLT DESCRIPTION	QTY	FINISH
BOLT	B1N2W 16 X 50 A325M	4	

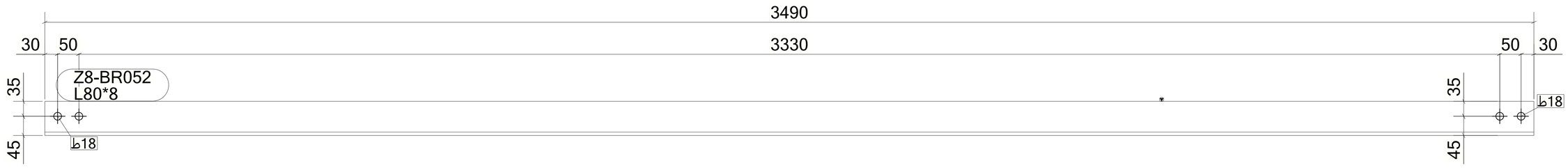

1 *REQUIRED AS DRAWN MARKED* **Z8-BR052**

6 October Monorail
Engineering Unit
Valid For Construction

GENERAL NOTES:

1. THE DIMENSIONS SHOWN ARE NOMINAL (IN MILLIMETERS), U.N.O.
2. WELD SIZESHALL BE AISC MINIMUM OF 6 mm UNLESS NOTED OTHERWISE.
3. ALL FIELD WELDS SHALL BE INSPECTED PER QUALITY ASSURANCE AND SPECIAL INSPECTIONS.

REFERENCE DRAWINGS

1	93M-BOA-NAT-LOT-04833
2	93M-BOA-NAT-LOT-09170
3	93M-BOA-NAT-LOT-01976
4	93M-BOA-NAT-LOT-20021
5	
6	
7	
8	
9	

6TH OF OCTOBER CITY RAIL TRANSIT MONORAIL

The Authority | Consultant: Hill International | Main Contractor: ORASCOM CONSTRUCTION, BOMBARDIER | Structural Designer: INNOVA TRANSPORTATION

KEY PLAN:

SCALE: AS SHOWN | SHOPDRAWING | DATE: 12/05/2023

REV	DATE	DSG.	CHK.	APP.	AMENDMENTS	STATUS
B	12/05/2023	M.KH	M.KH	DR.M.M	ISSUED FOR INFORMATION	IFI
A	11/20/2022	M.KH	M.KH	DR.M.M	ISSUED FOR INFORMATION	IFI

DRAWING TITLE
6TH OF OCTOBER MONORAIL
SERVICE WALKWAYS
ZONE (1008)
Z8-BR052

Project Code	Rubric	Initiator	Lot	Ref	Number	Revision
9 3 M 0 4 7 6	A C C	6 0 D E P	D W G	0 8 0 7 2		B

Tekla structures

Approval is subject to approval of coordination package between multi-discipline.

REVIEWED WITH COMMENT
MONORAILS PROJECT

MATERIAL LIST FOR ASSEMBLY MK'D **Z8-BR051**

Mark	Profile	GRADE	No.	Length	Area	Weight
Z8-BR051	L80*8	S235JR	1	3490	1.12	33.31
				Total	1.12	33.31

BOLT LIST:-

BOLT \ STUD	BOLT DESCRIPTION	QTY	FINISH
BOLT	B1N2W 16 X 50 A325M	4	

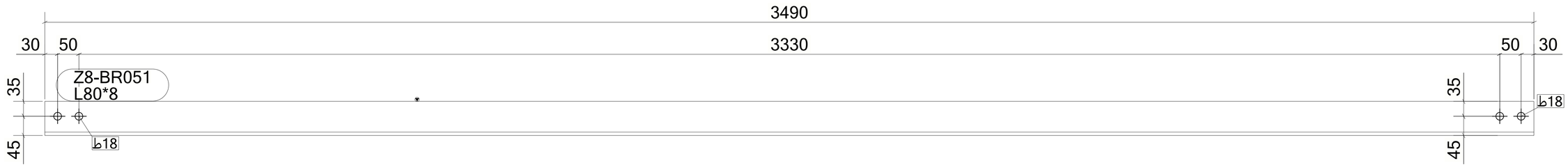

1 *REQUIRED AS DRAWN MARKED* **Z8-BR051**

6 October Monorail
Engineering Unit
Valid For Construction

GENERAL NOTES:

1. THE DIMENSIONS SHOWN ARE NOMINAL (IN MILLIMETERS), U.N.O.
2. WELD SIZESHALL BE AISC MINIMUM OF 6 mm UNLESS NOTED OTHERWISE.
3. ALL FIELD WELDS SHALL BE INSPECTED PER QUALITY ASSURANCE AND SPECIAL INSPECTIONS.

REFERENCE DRAWINGS

1	93M-BOA-NAT-LOT-04833
2	93M-BOA-NAT-LOT-09170
3	93M-BOA-NAT-LOT-01976
4	93M-BOA-NAT-LOT-20021
5	
6	
7	
8	
9	

6TH OF OCTOBER CITY RAIL TRANSIT MONORAIL

The Authority | Consultant: Hill International | Main Contractor: ORASCOM CONSTRUCTION, BOMBARDIER | Structural Designer: INNOVA TRANSPORTATION

KEY PLAN:

SCALE: AS SHOWN | SHOPDRAWING | DATE: 12/05/2023

REV	DATE	DSG.	CHK.	APP.	AMENDMENTS	STATUS
B	12/05/2023	M.KH	M.KH	DR.M.M	ISSUED FOR INFORMATION	IFI
A	11/20/2022	M.KH	M.KH	DR.M.M	ISSUED FOR INFORMATION	IFI

DRAWING TITLE
6TH OF OCTOBER MONORAIL
SERVICE WALKWAYS
ZONE (1008)
Z8-BR051

Project Code	Rubric	Initiator	Lot	Ref	Number	Revision
9 3 M 0 4 7 6	A C C	6 0 D E P	D W G	0 8 0 7 1		B

Tekla structures

Approval is subject to approval of coordination package between multi-discipline.

REVIEWED WITH COMMENT
MONORAILS PROJECT

MATERIAL LIST FOR ASSEMBLY MK'D **Z8-BR050**

Mark	Profile	GRADE	No.	Length	Area	Weight
Z8-BR050	L80*8	S235JR	1	2618	0.84	25.00
				Total	0.84	25.00

BOLT LIST:-

BOLT \ STUD	BOLT DESCRIPTION	QTY	FINISH
BOLT	B1N2W 16 X 50 A325M	4	

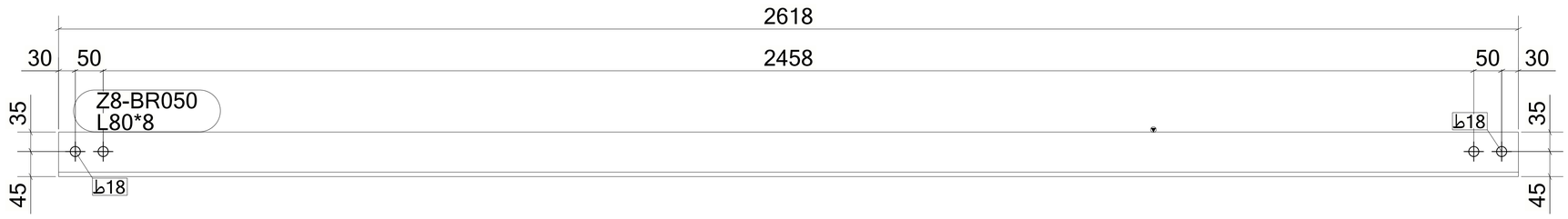

1 *REQUIRED AS DRAWN MARKED* **Z8-BR050**

6 October Monorail
Engineering Unit
Valid For Construction

GENERAL NOTES:

1. THE DIMENSIONS SHOWN ARE NOMINAL (IN MILLIMETERS), U.N.O.
2. WELD SIZESHALL BE AISC MINIMUM OF 6 mm UNLESS NOTED OTHERWISE.
3. ALL FIELD WELDS SHALL BE INSPECTED PER QUALITY ASSURANCE AND SPECIAL INSPECTIONS.

REFERENCE DRAWINGS

1	93M-BOA-NAT-LOT-04833
2	93M-BOA-NAT-LOT-09170
3	93M-BOA-NAT-LOT-01976
4	93M-BOA-NAT-LOT-20021
5	
6	
7	
8	
9	

6TH OF OCTOBER CITY RAIL TRANSIT MONORAIL

The Authority | Hill International Consultant | Main Contractor | Structural Designer

KEY PLAN:

SCALE: AS SHOWN | SHOPDRAWING | DATE: 12/05/2023

REV	DATE	DSG.	CHK.	APP.	AMENDMENTS	STATUS
B	12/05/2023	M.KH	M.KH	DR.M.M	ISSUED FOR INFORMATION	IFI
A	11/20/2022	M.KH	M.KH	DR.M.M	ISSUED FOR INFORMATION	IFI

DRAWING TITLE
6TH OF OCTOBER MONORAIL
SERVICE WALKWAYS
ZONE (1008)
Z8-BR050

Project Code	Rubric	Initiator	Lot	Ref	Number	Revision
9 3 M 0 4 7 6	A C C	6 0 D E P	D W G	0 8 0 7 0		B

Tekla structures

Approval is subject to approval of coordination package between multi-discipline.

REVIEWED WITH COMMENT
MONORAILS PROJECT

MATERIAL LIST FOR ASSEMBLY MK'D **Z8-BR049**

Mark	Profile	GRADE	No.	Length	Area	Weight
Z8-BR049	L80*8	S235JR	1	2622	0.84	25.03
				Total	0.84	25.03

BOLT LIST:-

BOLT \ STUD	BOLT DESCRIPTION	QTY	FINISH
BOLT	B1N2W 16 X 50 A325M	4	

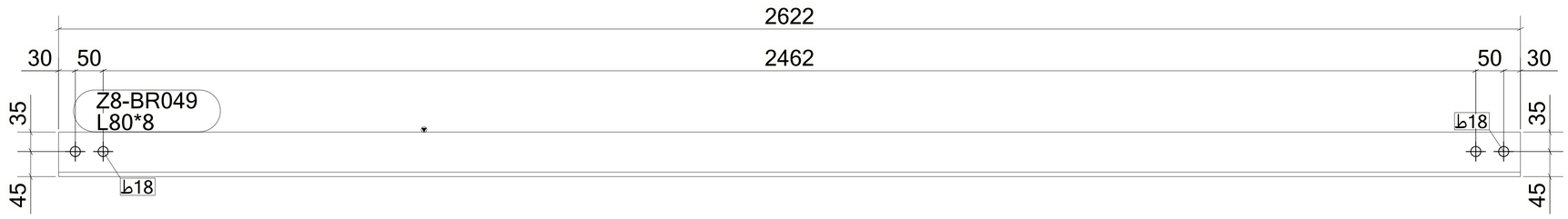

1 *REQUIRED AS DRAWN MARKED* **Z8-BR049**

6 October Monorail
Engineering Unit
Valid For Construction

GENERAL NOTES:

1. THE DIMENSIONS SHOWN ARE NOMINAL (IN MILLIMETERS), U.N.O.
2. WELD SIZESHALL BE AISC MINIMUM OF 6 mm UNLESS NOTED OTHERWISE.
3. ALL FIELD WELDS SHALL BE INSPECTED PER QUALITY ASSURANCE AND SPECIAL INSPECTIONS.

REFERENCE DRAWINGS

1	93M-BOA-NAT-LOT-04833
2	93M-BOA-NAT-LOT-09170
3	93M-BOA-NAT-LOT-01976
4	93M-BOA-NAT-LOT-20021
5	
6	
7	
8	
9	

6TH OF OCTOBER CITY RAIL TRANSIT MONORAIL

The Authority | Hill International Consultant | Main Contractor | Structural Designer

KEY PLAN:

SCALE: AS SHOWN | SHOPDRAWING | DATE: 12/05/2023

REV	DATE	DSG.	CHK.	APP.	AMENDMENTS	STATUS
B	12/05/2023	M.KH	M.KH	DR.M.M	ISSUED FOR INFORMATION	IFI
A	11/20/2022	M.KH	M.KH	DR.M.M	ISSUED FOR INFORMATION	IFI

DRAWING TITLE
6TH OF OCTOBER MONORAIL
SERVICE WALKWAYS
ZONE (1008)
Z8-BR049

Project Code	Rubric	Initiator	Lot	Ref	Number	Revision
93M	047	6ACC	60DE	PDWG	08069	B

Tekla structures

Approval is subject to approval of coordination package between multi-discipline.

REVIEWED WITH COMMENT
MONORAILS PROJECT

MATERIAL LIST FOR ASSEMBLY MK'D **Z8-BR048**

Mark	Profile	GRADE	No.	Length	Area	Weight
Z8-BR048	L80*8	S235JR	1	3428	1.10	32.72
				Total	1.10	32.72

BOLT LIST:-

BOLT \ STUD	BOLT DESCRIPTION	QTY	FINISH
BOLT	B1N2W 16 X 50 A325M	4	

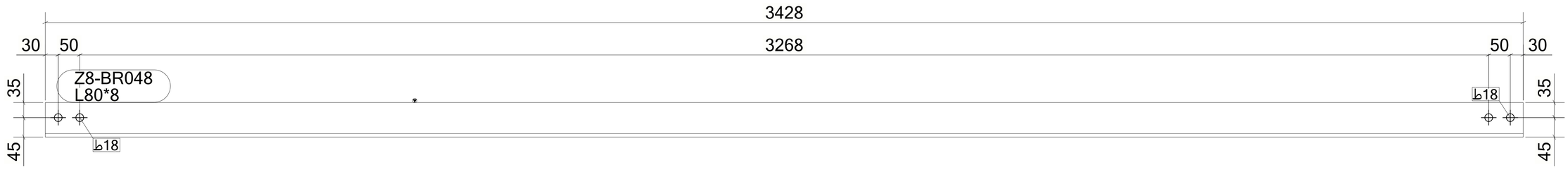

1 *REQUIRED AS DRAWN MARKED* **Z8-BR048**

6 October Monorail
Engineering Unit
Valid For Construction

GENERAL NOTES:

1. THE DIMENSIONS SHOWN ARE NOMINAL (IN MILLIMETERS), U.N.O.
2. WELD SIZESHALL BE AISC MINIMUM OF 6 mm UNLESS NOTED OTHERWISE.
3. ALL FIELD WELDS SHALL BE INSPECTED PER QUALITY ASSURANCE AND SPECIAL INSPECTIONS.

REFERENCE DRAWINGS

1	93M-BOA-NAT-LOT-04833
2	93M-BOA-NAT-LOT-09170
3	93M-BOA-NAT-LOT-01976
4	93M-BOA-NAT-LOT-20021
5	
6	
7	
8	
9	

6TH OF OCTOBER CITY RAIL TRANSIT MONORAIL

The Authority | Consultant: Hill International | Main Contractor: ORASCOM CONSTRUCTION, BOMBARDIER | Structural Designer: INNOVA TRANSPORTATION

KEY PLAN:

SCALE: AS SHOWN | SHOPDRAWING | DATE: 12/05/2023

REV	DATE	DSG.	CHK.	APP.	AMENDMENTS	STATUS
B	12/05/2023	M.KH	M.KH	DR.M.M	ISSUED FOR INFORMATION	IFI
A	11/20/2022	M.KH	M.KH	DR.M.M	ISSUED FOR INFORMATION	IFI

DRAWING TITLE
6TH OF OCTOBER MONORAIL
SERVICE WALKWAYS
ZONE (1008)
Z8-BR048

Project Code	Rubric	Initiator	Lot	Ref	Number	Revision
93M	047	6ACC	60DE	PDWG	08068	B

Tekla structures

Approval is subject to approval of coordination package between multi-discipline.

REVIEWED WITH COMMENT
MONORAILS PROJECT

MATERIAL LIST FOR ASSEMBLY MK'D **Z8-BR047**

Mark	Profile	GRADE	No.	Length	Area	Weight
Z8-BR047	L80*8	S235JR	1	1425	0.46	13.60
				Total	0.46	13.60

BOLT LIST:-

BOLT \ STUD	BOLT DESCRIPTION	QTY	FINISH
BOLT	B1N2W 16 X 50 A325M	2	

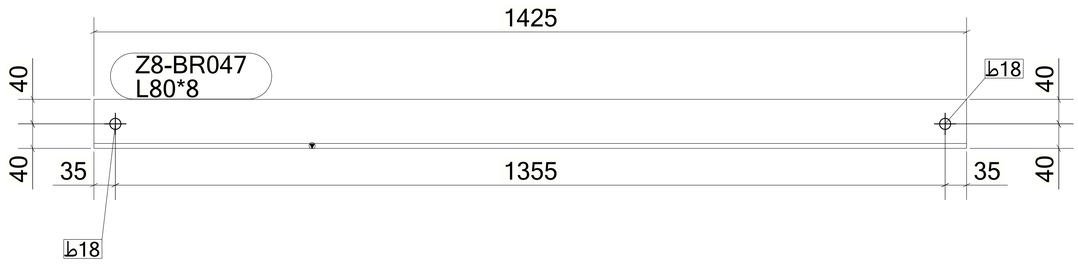

1 *REQUIRED AS DRAWN MARKED* **Z8-BR047**

6 October Monorail
Engineering Unit
Valid For Construction

GENERAL NOTES:

1. THE DIMENSIONS SHOWN ARE NOMINAL (IN MILLIMETERS), U.N.O.
2. WELD SIZESHALL BE AISC MINIMUM OF 6 mm UNLESS NOTED OTHERWISE.
3. ALL FIELD WELDS SHALL BE INSPECTED PER QUALITY ASSURANCE AND SPECIAL INSPECTIONS.

REFERENCE DRAWINGS

1	93M-BOA-NAT-LOT-04833
2	93M-BOA-NAT-LOT-09170
3	93M-BOA-NAT-LOT-01976
4	93M-BOA-NAT-LOT-20021
5	
6	
7	
8	
9	

6TH OF OCTOBER CITY RAIL TRANSIT MONORAIL

The Authority | Consultant: Hill International | Main Contractor: ORASCOM CONSTRUCTION, BOMBARDIER | Structural Designer: INNOVA TRANSPORTATION

KEY PLAN:

SCALE	SHOPDRAWING	DATE
AS SHOWN		

REV	DATE	DSG.	CHK.	APP.	AMENDMENTS	STATUS

DRAWING TITLE
6TH OF OCTOBER MONORAIL
SERVICE WALKWAYS
ZONE
Z8-BR047

Project Code	Rubric	Initiator	Lot	Ref	Number	Revision
9 3 M 0 4 7 6	A C C	6 0 D E P	D W G	0 8 0 6 7		B

Tekla structures

Approval is subject to approval of coordination package between multi-discipline.

REVIEWED WITH COMMENT
MONORAILS PROJECT

MATERIAL LIST FOR ASSEMBLY MK'D **Z8-BR046**

Mark	Profile	GRADE	No.	Length	Area	Weight
Z8-BR046	L80*8	S235JR	1	1387	0.45	13.24
				Total	0.45	13.24

BOLT LIST:-

BOLT \ STUD	BOLT DESCRIPTION	QTY	FINISH
BOLT	B1N2W 16 X 50 A325M	2	

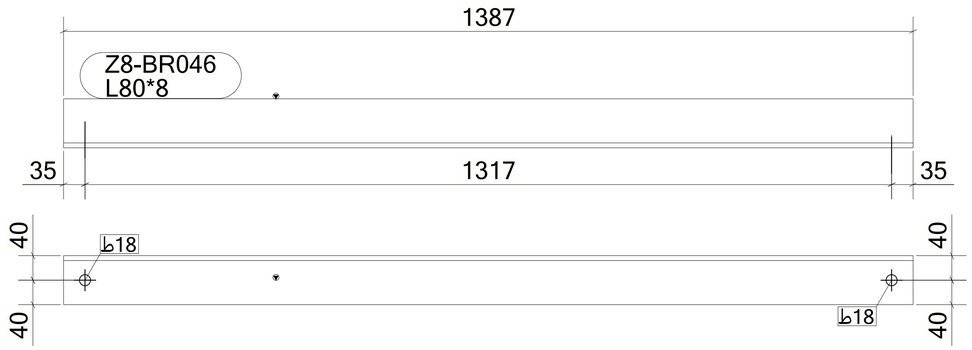

1 *REQUIRED AS DRAWN MARKED* **Z8-BR046**

6 October Monorail
Engineering Unit
Valid For Construction

GENERAL NOTES:

1. THE DIMENSIONS SHOWN ARE NOMINAL (IN MILLIMETERS), U.N.O.
2. WELD SIZESHALL BE AISC MINIMUM OF 6 mm UNLESS NOTED OTHERWISE.
3. ALL FIELD WELDS SHALL BE INSPECTED PER QUALITY ASSURANCE AND SPECIAL INSPECTIONS.

REFERENCE DRAWINGS

1	93M-BOA-NAT-LOT-04833
2	93M-BOA-NAT-LOT-09170
3	93M-BOA-NAT-LOT-01976
4	93M-BOA-NAT-LOT-20021
5	
6	
7	
8	
9	

6TH OF OCTOBER CITY RAIL TRANSIT MONORAIL

The Authority | Consultant: Hill International | Main Contractor: ORASCOM CONSTRUCTION, BOMBARDIER | Structural Designer: INNOVA TRANSPORTATION

KEY PLAN:

SCALE	SHOPDRAWING	DATE
AS SHOWN		

REV	DATE	DSG.	CHK.	APP.	AMENDMENTS	STATUS

DRAWING TITLE
6TH OF OCTOBER MONORAIL
SERVICE WALKWAYS
ZONE
Z8-BR046

Project Code	Rubric	Initiator	Lot	Ref	Number	Revision
93M	047	6ACC	60DE	PDWG	08066	B

Tekla structures

Approval is subject to approval of coordination package between multi-discipline.

REVIEWED WITH COMMENT
MONORAILS PROJECT

MATERIAL LIST FOR ASSEMBLY MK'D **Z8-BR045**

Mark	Profile	GRADE	No.	Length	Area	Weight
Z8-BR045	L80*8	S235JR	1	1366	0.44	13.04
				Total	0.44	13.04

BOLT LIST:-

BOLT \ STUD	BOLT DESCRIPTION	QTY	FINISH
BOLT	B1N2W 16 X 50 A325M	2	

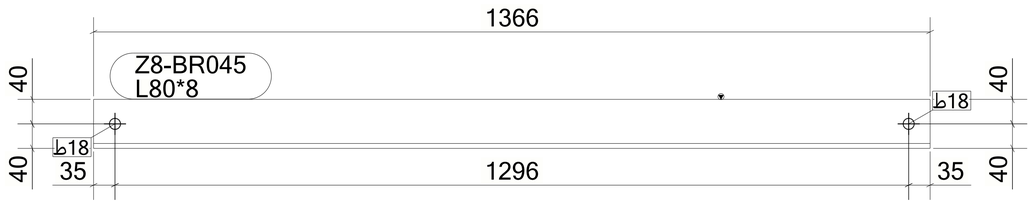

1 *REQUIRED AS DRAWN MARKED* **Z8-BR045**

6 October Monorail
Engineering Unit
Valid For Construction

GENERAL NOTES:

1. THE DIMENSIONS SHOWN ARE NOMINAL (IN MILLIMETERS), U.N.O.
2. WELD SIZESHALL BE AISC MINIMUM OF 6 mm UNLESS NOTED OTHERWISE.
3. ALL FIELD WELDS SHALL BE INSPECTED PER QUALITY ASSURANCE AND SPECIAL INSPECTIONS.

REFERENCE DRAWINGS

1	93M-BOA-NAT-LOT-04833
2	93M-BOA-NAT-LOT-09170
3	93M-BOA-NAT-LOT-01976
4	93M-BOA-NAT-LOT-20021
5	
6	
7	
8	
9	

6TH OF OCTOBER CITY RAIL TRANSIT MONORAIL

The Authority | Consultant: Hill International | Main Contractor: ORASCOM CONSTRUCTION, BOMBARDIER | Structural Designer: INNOVA TRANSPORTATION

KEY PLAN:

SCALE	SHOPDRAWING	DATE
AS SHOWN		

REV	DATE	DSG.	CHK.	APP.	AMENDMENTS	STATUS

DRAWING TITLE
6TH OF OCTOBER MONORAIL
SERVICE WALKWAYS
ZONE
Z8-BR045

Project Code	Rubric	Initiator	Lot	Ref	Number	Revision
93M	047	ACC	60DEP	DWG	80655	B

Tekla structures

Approval is subject to approval of coordination package between multi-discipline.

REVIEWED WITH COMMENT
MONORAILS PROJECT

MATERIAL LIST FOR ASSEMBLY MK'D **Z8-BR044**

Mark	Profile	GRADE	No.	Length	Area	Weight
Z8-BR044	L80*8	S235JR	1	1415	0.46	13.50
				Total	0.46	13.50

BOLT LIST:-

BOLT \ STUD	BOLT DESCRIPTION	QTY	FINISH
BOLT	B1N2W 16 X 50 A325M	2	

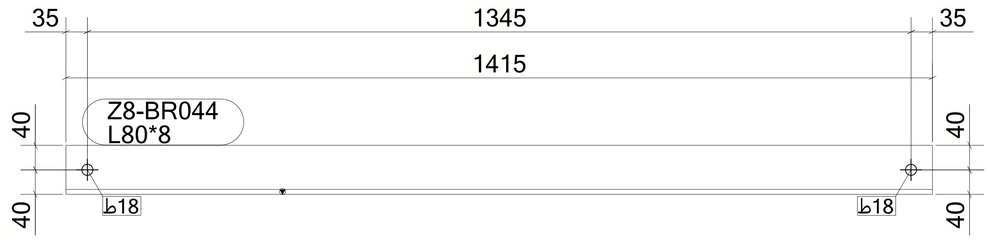

1 *REQUIRED AS DRAWN MARKED* **Z8-BR044**

6 October Monorail
Engineering Unit
Valid For Construction

GENERAL NOTES:

1. THE DIMENSIONS SHOWN ARE NOMINAL (IN MILLIMETERS), U.N.O.
2. WELD SIZESHALL BE AISC MINIMUM OF 6 mm UNLESS NOTED OTHERWISE.
3. ALL FIELD WELDS SHALL BE INSPECTED PER QUALITY ASSURANCE AND SPECIAL INSPECTIONS.

REFERENCE DRAWINGS

1	93M-BOA-NAT-LOT-04833
2	93M-BOA-NAT-LOT-09170
3	93M-BOA-NAT-LOT-01976
4	93M-BOA-NAT-LOT-20021
5	
6	
7	
8	
9	

6TH OF OCTOBER CITY RAIL TRANSIT MONORAIL

The Authority | Consultant: Hill International | Main Contractor: ORASCOM CONSTRUCTION, BOMBARDIER | Structural Designer: INNOVA TRANSPORTATION

KEY PLAN:

SCALE	SHOPDRAWING	DATE
AS SHOWN		

REV	DATE	DSG.	CHK.	APP.	AMENDMENTS	STATUS

DRAWING TITLE
6TH OF OCTOBER MONORAIL
SERVICE WALKWAYS
ZONE
Z8-BR044

Project Code	Rubric	Initiator	Lot	Ref	Number	Revision
9 3 M	0 4 7 6	A C C	6 0 D E P	D W G	0 8 0 6 4	B

Tekla structures

Approval is subject to approval of coordination package between multi-discipline.

REVIEWED WITH COMMENT
MONORAILS PROJECT

MATERIAL LIST FOR ASSEMBLY MK'D **Z8-BR043**

Mark	Profile	GRADE	No.	Length	Area	Weight
Z8-BR043	L80*8	S235JR	1	1210	0.39	11.55
				Total	0.39	11.55

BOLT LIST:-

BOLT \ STUD	BOLT DESCRIPTION	QTY	FINISH
BOLT	B1N2W 16 X 50 A325M	2	

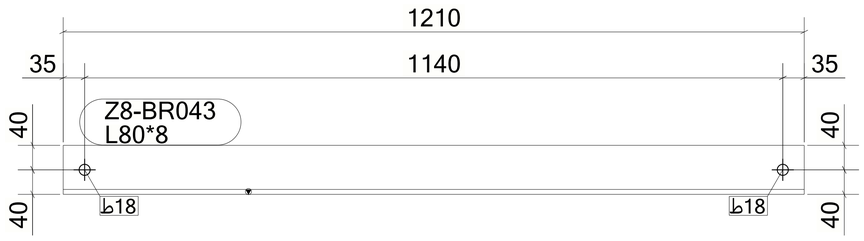

1 *REQUIRED AS DRAWN MARKED* **Z8-BR043**

6 October Monorail
Engineering Unit
Valid For Construction

GENERAL NOTES:

1. THE DIMENSIONS SHOWN ARE NOMINAL (IN MILLIMETERS), U.N.O.
2. WELD SIZESHALL BE AISC MINIMUM OF 6 mm UNLESS NOTED OTHERWISE.
3. ALL FIELD WELDS SHALL BE INSPECTED PER QUALITY ASSURANCE AND SPECIAL INSPECTIONS.

REFERENCE DRAWINGS

1	93M-BOA-NAT-LOT-04833
2	93M-BOA-NAT-LOT-09170
3	93M-BOA-NAT-LOT-01976
4	93M-BOA-NAT-LOT-20021
5	
6	
7	
8	
9	

6TH OF OCTOBER CITY RAIL TRANSIT MONORAIL

The Authority | Consultant: Hill International | Main Contractor: ORASCOM CONSTRUCTION, BOMBARDIER | Structural Designer: INNOVA TRANSPORTATION

KEY PLAN:

SCALE	SHOPDRAWING	DATE
AS SHOWN		

REV	DATE	DSG.	CHK.	APP.	AMENDMENTS	STATUS

DRAWING TITLE
6TH OF OCTOBER MONORAIL
SERVICE WALKWAYS
ZONE
Z8-BR043

Project Code	Rubric	Initiator	Lot	Ref	Number	Revision
9 3 M	0 4 7 6	A C C	6 0 D E P	D W G	0 8 0 6 3	B

Tekla structures

Approval is subject to approval of coordination package between multi-discipline.

REVIEWED WITH COMMENT
MONORAILS PROJECT

MATERIAL LIST FOR ASSEMBLY MK'D **Z8-BR042**

Mark	Profile	GRADE	No.	Length	Area	Weight
Z8-BR042	L80*8	S235JR	1	1600	0.51	15.27
				Total	0.51	15.27

BOLT LIST:-

BOLT \ STUD	BOLT DESCRIPTION	QTY	FINISH
BOLT	B1N2W 16 X 50 A325M	2	

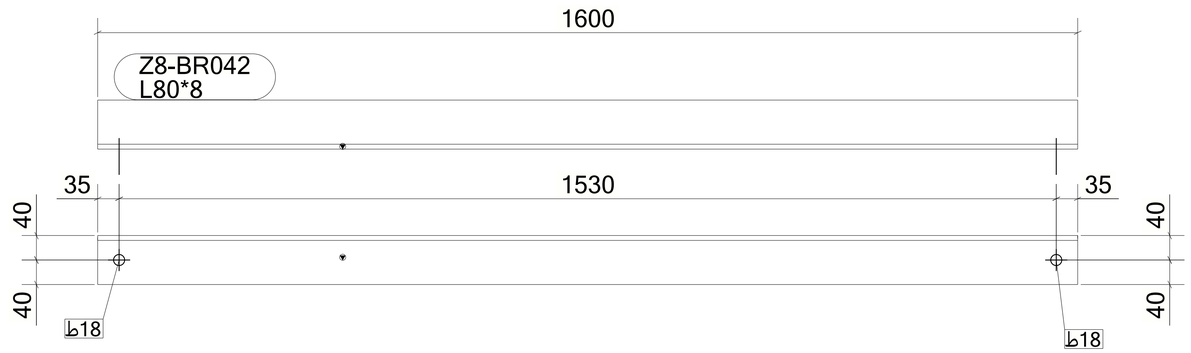

1 *REQUIRED AS DRAWN MARKED* **Z8-BR042**

GENERAL NOTES:

1. THE DIMENSIONS SHOWN ARE NOMINAL (IN MILLIMETERS), U.N.O.
2. WELD SIZESHALL BE AISC MINIMUM OF 6 mm UNLESS NOTED OTHERWISE.
3. ALL FIELD WELDS SHALL BE INSPECTED PER QUALITY ASSURANCE AND SPECIAL INSPECTIONS.

REFERENCE DRAWINGS

1	93M-BOA-NAT-LOT-04833
2	93M-BOA-NAT-LOT-09170
3	93M-BOA-NAT-LOT-01976
4	93M-BOA-NAT-LOT-20021
5	
6	
7	
8	
9	

6TH OF OCTOBER CITY RAIL TRANSIT MONORAIL

The Authority — Hill International Consultant — Main Contractor — Structural Designer

KEY PLAN:

6 October Monorail
Engineering Unit
Valid For Construction

SCALE	SHOPDRAWING	DATE
AS SHOWN		

REV	DATE	DSG.	CHK.	APP.	AMENDMENTS	STATUS

DRAWING TITLE
6TH OF OCTOBER MONORAIL
SERVICE WALKWAYS
ZONE
Z8-BR042

Project Code	Rubric	Initiator	Lot	Ref	Number	Revision
93M	047	6ACC	60DE	PDWG	0806	2 B

Tekla structures

Approval is subject to approval of coordination package between multi-discipline.

REVIEWED WITH COMMENT
MONORAILS PROJECT

MATERIAL LIST FOR ASSEMBLY MK'D **Z8-BR041**

Mark	Profile	GRADE	No.	Length	Area	Weight
Z8-BR041	L70X70X7	S235JR	1	979	0.27	7.23
W344	PL8*50	S355JR	1	70	0.01	0.22
				Total	0.28	7.45

BOLT LIST:-

BOLT \ STUD	BOLT DESCRIPTION	QTY	FINISH
BOLT	B1N2W 16 X 50 A325M	1	

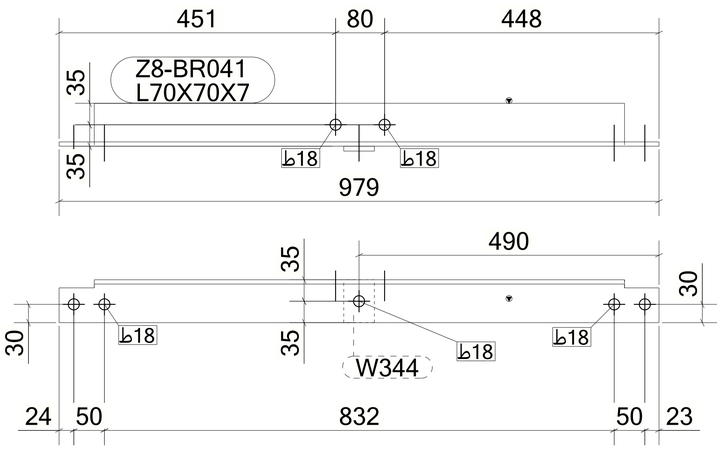

1 *REQUIRED AS DRAWN MARKED* **Z8-BR041**

6 October Monorail
Engineering Unit
Valid For Construction

GENERAL NOTES:

1. THE DIMENSIONS SHOWN ARE NOMINAL (IN MILLIMETERS), U.N.O.
2. WELD SIZESHALL BE AISC MINIMUM OF 6 mm UNLESS NOTED OTHERWISE.
3. ALL FIELD WELDS SHALL BE INSPECTED PER QUALITY ASSURANCE AND SPECIAL INSPECTIONS.

REFERENCE DRAWINGS

1	93M-BOA-NAT-LOT-04833
2	93M-BOA-NAT-LOT-09170
3	93M-BOA-NAT-LOT-01976
4	93M-BOA-NAT-LOT-20021
5	
6	
7	
8	
9	

6TH OF OCTOBER CITY RAIL TRANSIT MONORAIL

The Authority | Consultant: Hill International | Main Contractor: ORASCOM CONSTRUCTION, BOMBARDIER | Structural Designer: INNOVA TRANSPORTATION

KEY PLAN:

SCALE	SHOPDRAWING	DATE
AS SHOWN		12/05/2023

REV	DATE	DSG.	CHK.	APP.	AMENDMENTS	STATUS
B	12/05/2023	M.KH	M.KH	DR.M.M	ISSUED FOR INFORMATION	IFI
A	11/20/2022	M.KH	M.KH	DR.M.M	ISSUED FOR INFORMATION	IFI

DRAWING TITLE
6TH OF OCTOBER MONORAIL
SERVICE WALKWAYS
ZONE (1008)
Z8-BR041

Project Code	Rubric	Initiator	Lot	Ref	Number	Revision
93M	047	6ACC	60DE	PDWG	08061	B

Tekla structures

Approval is subject to approval of coordination package between multi-discipline.

REVIEWED WITH COMMENT
MONORAILS PROJECT

MATERIAL LIST FOR ASSEMBLY MK'D **Z8-BR040**

Mark	Profile	GRADE	No.	Length	Area	Weight
Z8-BR040	L70X70X7	S235JR	1	979	0.27	7.23
				Total	0.27	7.23

BOLT LIST:-

BOLT \ STUD	BOLT DESCRIPTION	QTY	FINISH

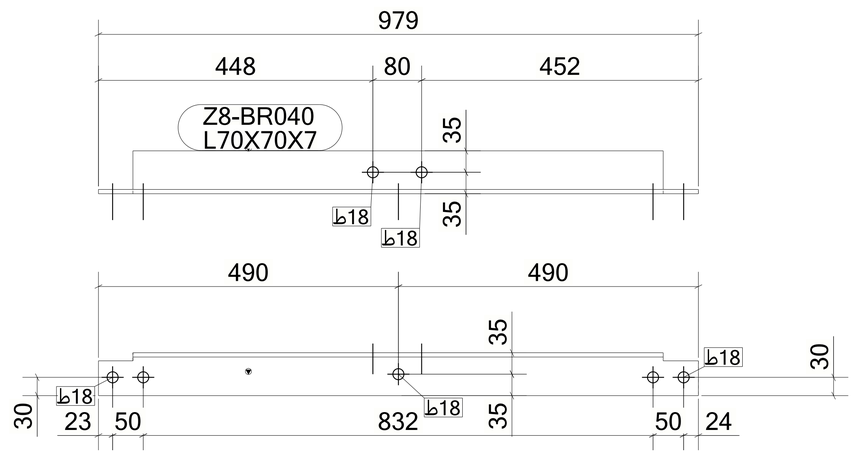

1 *REQUIRED AS DRAWN MARKED* **Z8-BR040**

GENERAL NOTES:

1. THE DIMENSIONS SHOWN ARE NOMINAL (IN MILLIMETERS), U.N.O.
2. WELD SIZESHALL BE AISC MINIMUM OF 6 mm UNLESS NOTED OTHERWISE.
3. ALL FIELD WELDS SHALL BE INSPECTED PER QUALITY ASSURANCE AND SPECIAL INSPECTIONS.

REFERENCE DRAWINGS

1	93M-BOA-NAT-LOT-04833
2	93M-BOA-NAT-LOT-09170
3	93M-BOA-NAT-LOT-01976
4	93M-BOA-NAT-LOT-20021
5	
6	
7	
8	
9	

6TH OF OCTOBER CITY RAIL TRANSIT MONORAIL

The Authority | Consultant: Hill International | Main Contractor: ORASCOM CONSTRUCTION, Ch. Joan Contumes, BOMBARDIER | Structural Designer: INNOVA TRANSPORTATION

KEY PLAN:

6 October Monorail
Engineering Unit
Valid For Construction

SCALE	SHOPDRAWING	DATE
AS SHOWN		12/05/2023

REV	DATE	DSG.	CHK.	APP.	AMENDMENTS	STATUS
B	12/05/2023	M.KH	M.KH	DR.M.M	ISSUED FOR INFORMATION	IFI
A	11/20/2022	M.KH	M.KH	DR.M.M	ISSUED FOR INFORMATION	IFI

DRAWING TITLE
6TH OF OCTOBER MONORAIL
SERVICE WALKWAYS
ZONE (1008)
Z8-BR040

Project Code	Rubric	Initiator	Lot	Ref	Number	Revision
9 3 M	0 4 7 6	A C C	6 0 D E P	D W G	0 8 0 6 0	B

Tekla structures

Approval is subject to approval of coordination package between multi-discipline.

REVIEWED WITH COMMENT
MONORAILS PROJECT

MATERIAL LIST FOR ASSEMBLY MK'D **Z8-BR039**

Mark	Profile	GRADE	No.	Length	Area	Weight
Z8-BR039	L70X70X7	S235JR	1	979	0.27	7.23
W784	PL8*50	S355JR	1	70	0.01	0.22
				Total	0.28	7.45

BOLT LIST:-

BOLT \ STUD	BOLT DESCRIPTION	QTY	FINISH
BOLT	B1N2W 12 X 50 A325M	1	

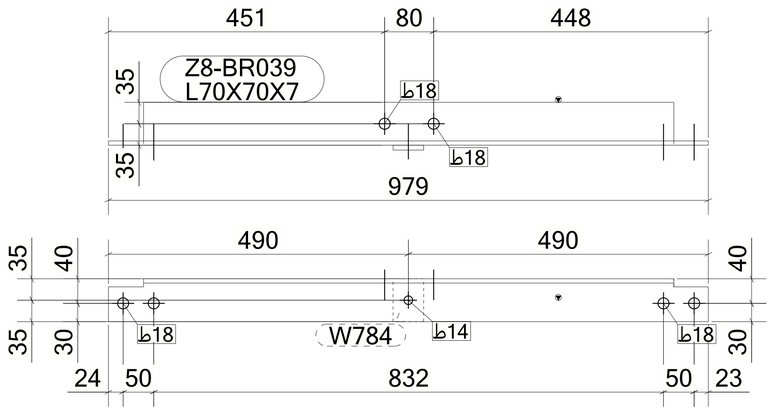

1 *REQUIRED AS DRAWN MARKED* **Z8-BR039**

6 October Monorail
Engineering Unit
Valid For Construction

GENERAL NOTES:

1. THE DIMENSIONS SHOWN ARE NOMINAL (IN MILLIMETERS), U.N.O.
2. WELD SIZESHALL BE AISC MINIMUM OF 6 mm UNLESS NOTED OTHERWISE.
3. ALL FIELD WELDS SHALL BE INSPECTED PER QUALITY ASSURANCE AND SPECIAL INSPECTIONS.

REFERENCE DRAWINGS

1	93M-BOA-NAT-LOT-04833
2	93M-BOA-NAT-LOT-09170
3	93M-BOA-NAT-LOT-01976
4	93M-BOA-NAT-LOT-20021
5	
6	
7	
8	
9	

6TH OF OCTOBER CITY RAIL TRANSIT MONORAIL

The Authority | Consultant: Hill International | Main Contractor: ORASCOM CONSTRUCTION, BOMBARDIER | Structural Designer: INNOVA TRANSPORTATION

KEY PLAN:

SCALE	SHOPDRAWING	DATE
AS SHOWN		12/05/2023

REV	DATE	DSG.	CHK.	APP.	AMENDMENTS	STATUS
B	12/05/2023	M.KH	M.KH	DR.M.M	ISSUED FOR INFORMATION	IFI
A	11/20/2022	M.KH	M.KH	DR.M.M	ISSUED FOR INFORMATION	IFI

DRAWING TITLE
6TH OF OCTOBER MONORAIL
SERVICE WALKWAYS
ZONE (1008)
Z8-BR039

Project Code	Rubric	Initiator	Lot	Ref	Number	Revision
93M	047	ACC	60DEP	DWG	08059	B

Tekla structures

Approval is subject to approval of coordination package between multi-discipline.

REVIEWED WITH COMMENT MONORAILS PROJECT

MATERIAL LIST FOR ASSEMBLY MK'D **Z8-BR038**

Mark	Profile	GRADE	No.	Length	Area	Weight
Z8-BR038	L70X70X7	S235JR	1	979	0.27	7.23
				Total	0.27	7.23

BOLT LIST:-

BOLT \ STUD	BOLT DESCRIPTION	QTY	FINISH

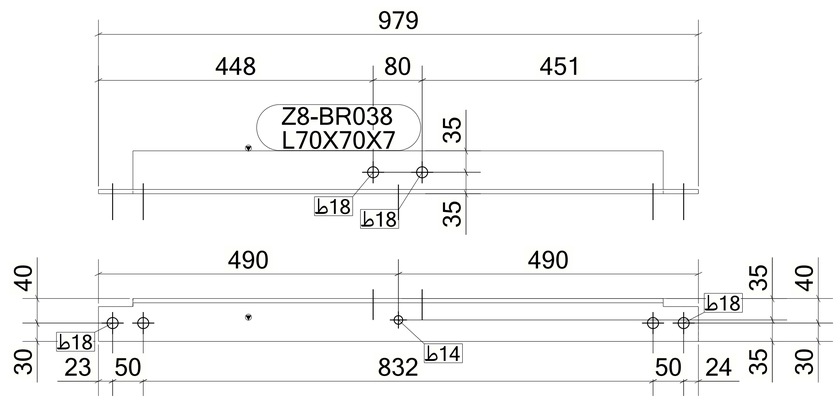

1 *REQUIRED AS DRAWN MARKED* **Z8-BR038**

6 October Monorail Engineering Unit
Valid For Construction

GENERAL NOTES:

1. THE DIMENSIONS SHOWN ARE NOMINAL (IN MILLIMETERS), U.N.O.
2. WELD SIZESHALL BE AISC MINIMUM OF 6 mm UNLESS NOTED OTHERWISE.
3. ALL FIELD WELDS SHALL BE INSPECTED PER QUALITY ASSURANCE AND SPECIAL INSPECTIONS.

REFERENCE DRAWINGS

1	93M-BOA-NAT-LOT-04833
2	93M-BOA-NAT-LOT-09170
3	93M-BOA-NAT-LOT-01976
4	93M-BOA-NAT-LOT-20021
5	
6	
7	
8	
9	

6TH OF OCTOBER CITY RAIL TRANSIT MONORAIL

The Authority — Hill International Consultant — ORASCOM BOMBARDIER Main Contractor — INNOVA Structural Designer

KEY PLAN:

SCALE	SHOPDRAWING	DATE
AS SHOWN		12/05/2023

REV	DATE	DSG.	CHK.	APP.	AMENDMENTS	STATUS
B	12/05/2023	M.KH	M.KH	DR.M.M	ISSUED FOR INFORMATION	IFI
A	11/20/2022	M.KH	M.KH	DR.M.M	ISSUED FOR INFORMATION	IFI

DRAWING TITLE
6TH OF OCTOBER MONORAIL SERVICE WALKWAYS ZONE (1008)
Z8-BR038

Project Code	Rubric	Initiator	Lot	Ref	Number	Revision
93M	0476	ACC	60DEP	DWG	08058	B

Tekla structures

Approval is subject to approval of coordination package between multi-discipline.

REVIEWED WITH COMMENT
MONORAILS PROJECT

MATERIAL LIST FOR ASSEMBLY MK'D **Z8-BR037**

Mark	Profile	GRADE	No.	Length	Area	Weight
Z8-BR037	L60*6	S235JR	1	1528	0.37	8.20
				Total	0.37	8.20

BOLT LIST:-

BOLT \ STUD	BOLT DESCRIPTION	QTY	FINISH
BOLT	B1N2W 16 X 50 A325M	4	

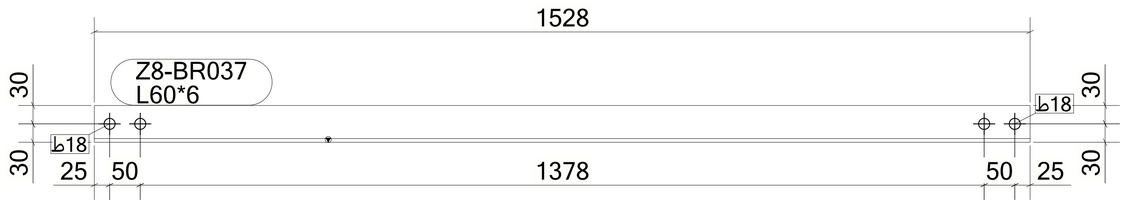

1 *REQUIRED AS DRAWN MARKED* **Z8-BR037**

GENERAL NOTES:

1. THE DIMENSIONS SHOWN ARE NOMINAL (IN MILLIMETERS), U.N.O.
2. WELD SIZESHALL BE AISC MINIMUM OF 6 mm UNLESS NOTED OTHERWISE.
3. ALL FIELD WELDS SHALL BE INSPECTED PER QUALITY ASSURANCE AND SPECIAL INSPECTIONS.

REFERENCE DRAWINGS

1	93M-BOA-NAT-LOT-04833
2	93M-BOA-NAT-LOT-09170
3	93M-BOA-NAT-LOT-01976
4	93M-BOA-NAT-LOT-20021
5	
6	
7	
8	
9	

6TH OF OCTOBER CITY RAIL TRANSIT MONORAIL

The Authority | Consultant: Hill International | Main Contractor: ORASCOM CONSTRUCTION, BOMBARDIER | Structural Designer: INNOVA TRANSPORTATION

KEY PLAN:

6 October Monorail
Engineering Unit
Valid For Construction

SCALE	SHOPDRAWING	DATE
AS SHOWN		12/05/2023

REV	DATE	DSG.	CHK.	APP.	AMENDMENTS	STATUS
B	12/05/2023	M.KH	M.KH	DR.M.M	ISSUED FOR INFORMATION	IFI
A	11/20/2022	M.KH	M.KH	DR.M.M	ISSUED FOR INFORMATION	IFI

DRAWING TITLE
6TH OF OCTOBER MONORAIL
SERVICE WALKWAYS
ZONE (1008)
Z8-BR037

Project Code	Rubric	Initiator	Lot	Ref	Number	Revision
9 3 M 0 4 7 6	A C C	6 0 D E P	D W G	0 8 0 5 7		B

Tekla structures

Approval is subject to approval of coordination package between multi-discipline.

REVIEWED WITH COMMENT
MONORAILS PROJECT

MATERIAL LIST FOR ASSEMBLY MK'D **Z8-BR036**

Mark	Profile	GRADE	No.	Length	Area	Weight
Z8-BR036	L60*6	S235JR	1	1528	0.37	8.20
				Total	0.37	8.20

BOLT LIST:-

BOLT \ STUD	BOLT DESCRIPTION	QTY	FINISH
BOLT	B1N2W 16 X 50 A325M	4	

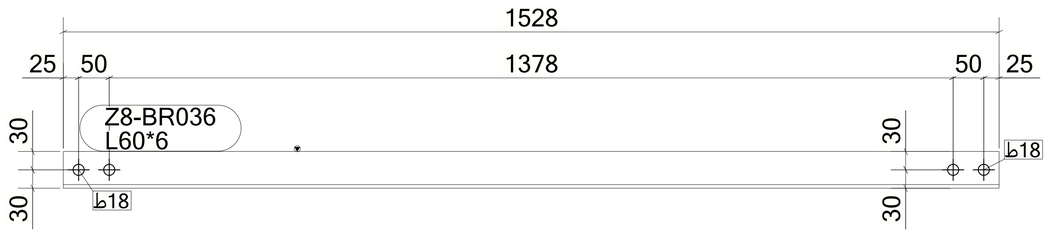

1 *REQUIRED AS DRAWN MARKED* **Z8-BR036**

6 October Monorail
Engineering Unit
Valid For Construction

GENERAL NOTES:

1. THE DIMENSIONS SHOWN ARE NOMINAL (IN MILLIMETERS), U.N.O.
2. WELD SIZESHALL BE AISC MINIMUM OF 6 mm UNLESS NOTED OTHERWISE.
3. ALL FIELD WELDS SHALL BE INSPECTED PER QUALITY ASSURANCE AND SPECIAL INSPECTIONS.

REFERENCE DRAWINGS

1	93M-BOA-NAT-LOT-04833
2	93M-BOA-NAT-LOT-09170
3	93M-BOA-NAT-LOT-01976
4	93M-BOA-NAT-LOT-20021
5	
6	
7	
8	
9	

6TH OF OCTOBER CITY RAIL TRANSIT MONORAIL

The Authority | Consultant: Hill International | Main Contractor: ORASCOM CONSTRUCTION, BOMBARDIER | Structural Designer: INNOVA TRANSPORTATION

KEY PLAN:

SCALE: AS SHOWN | SHOPDRAWING | DATE: 12/05/2023

REV	DATE	DSG.	CHK.	APP.	AMENDMENTS	STATUS
B	12/05/2023	M.KH	M.KH	DR.M.M	ISSUED FOR INFORMATION	IFI
A	11/20/2022	M.KH	M.KH	DR.M.M	ISSUED FOR INFORMATION	IFI

DRAWING TITLE
6TH OF OCTOBER MONORAIL
SERVICE WALKWAYS
ZONE (1008)
Z8-BR036

Project Code	Rubric	Initiator	Lot	Ref	Number	Revision
93M	047	6ACC	60DE	PDWG	0805	6 B

Tekla structures

Approval is subject to approval of coordination package between multi-discipline.

REVIEWED WITH COMMENT
MONORAILS PROJECT

MATERIAL LIST FOR ASSEMBLY MK'D **Z8-BR035**

Mark	Profile	GRADE	No.	Length	Area	Weight
Z8-BR035	L60*6	S235JR	1	1528	0.37	8.20
				Total	0.37	8.20

BOLT LIST:-

BOLT \ STUD	BOLT DESCRIPTION	QTY	FINISH
BOLT	B1N2W 16 X 50 A325M	4	

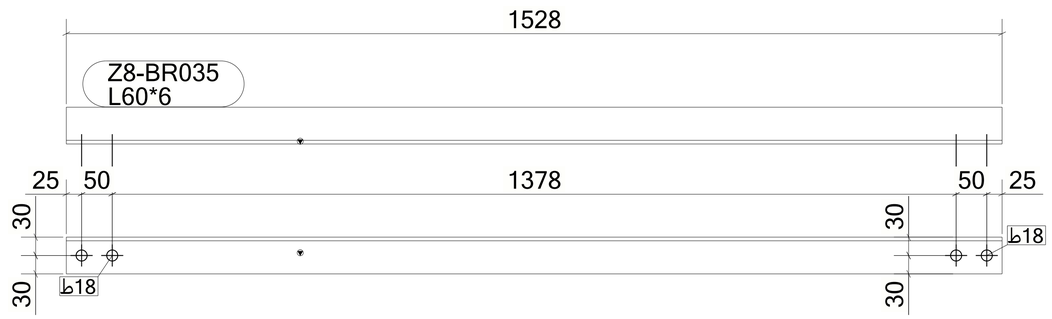

1 *REQUIRED AS DRAWN MARKED* **Z8-BR035**

GENERAL NOTES:

1. THE DIMENSIONS SHOWN ARE NOMINAL (IN MILLIMETERS), U.N.O.
2. WELD SIZESHALL BE AISC MINIMUM OF 6 mm UNLESS NOTED OTHERWISE.
3. ALL FIELD WELDS SHALL BE INSPECTED PER QUALITY ASSURANCE AND SPECIAL INSPECTIONS.

REFERENCE DRAWINGS

1	93M-BOA-NAT-LOT-04833
2	93M-BOA-NAT-LOT-09170
3	93M-BOA-NAT-LOT-01976
4	93M-BOA-NAT-LOT-20021
5	
6	
7	
8	
9	

6TH OF OCTOBER CITY RAIL TRANSIT MONORAIL

The Authority — Hill International Consultant — Main Contractor — Structural Designer

KEY PLAN:

6 October Monorail
Engineering Unit
Valid For Construction

SCALE	SHOPDRAWING	DATE
AS SHOWN		12/05/2023

REV	DATE	DSG.	CHK.	APP.	AMENDMENTS	STATUS
B	12/05/2023	M.KH	M.KH	DR.M.M	ISSUED FOR INFORMATION	IFI
A	11/20/2022	M.KH	M.KH	DR.M.M	ISSUED FOR INFORMATION	IFI

DRAWING TITLE
6TH OF OCTOBER MONORAIL
SERVICE WALKWAYS
ZONE (1008)
Z8-BR035

Project Code	Rubric	Initiator	Lot	Ref	Number	Revision
93M	047	6ACC	60	DEP	DWG 08055	B

Tekla structures

Approval is subject to approval of coordination package between multi-discipline.

REVIEWED WITH COMMENT
MONORAILS PROJECT

MATERIAL LIST FOR ASSEMBLY MK'D **Z8-BR034**

Mark	Profile	GRADE	No.	Length	Area	Weight
Z8-BR034	L60*6	S235JR	1	1528	0.37	8.20
				Total	0.37	8.20

BOLT LIST:-

BOLT \ STUD	BOLT DESCRIPTION	QTY	FINISH
BOLT	B1N2W 16 X 50 A325M	4	

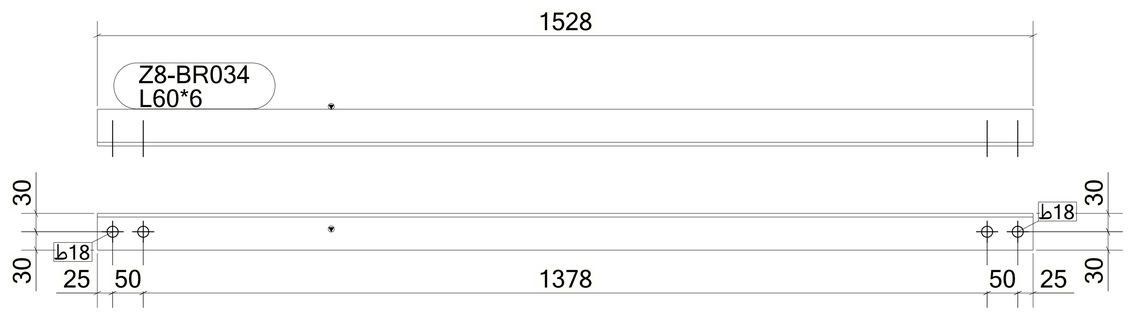

1 *REQUIRED AS DRAWN MARKED* **Z8-BR034**

GENERAL NOTES:

1. THE DIMENSIONS SHOWN ARE NOMINAL (IN MILLIMETERS), U.N.O.
2. WELD SIZESHALL BE AISC MINIMUM OF 6 mm UNLESS NOTED OTHERWISE.
3. ALL FIELD WELDS SHALL BE INSPECTED PER QUALITY ASSURANCE AND SPECIAL INSPECTIONS.

REFERENCE DRAWINGS

1	93M-BOA-NAT-LOT-04833
2	93M-BOA-NAT-LOT-09170
3	93M-BOA-NAT-LOT-01976
4	93M-BOA-NAT-LOT-20021
5	
6	
7	
8	
9	

6TH OF OCTOBER CITY RAIL TRANSIT MONORAIL

The Authority — Hill International Consultant — Main Contractor — Structural Designer

KEY PLAN:

6 October Monorail
Engineering Unit
Valid For Construction

SCALE: AS SHOWN | SHOPDRAWING | DATE: 12/05/2023

REV	DATE	DSG.	CHK.	APP.	AMENDMENTS	STATUS
B	12/05/2023	M.KH	M.KH	DR.M.M	ISSUED FOR INFORMATION	IFI
A	11/20/2022	M.KH	M.KH	DR.M.M	ISSUED FOR INFORMATION	IFI

DRAWING TITLE
6TH OF OCTOBER MONORAIL
SERVICE WALKWAYS
ZONE (1008)
Z8-BR034

Project Code	Rubric	Initiator	Lot	Ref	Number	Revision
93M	047	6ACC	60DE	PDWG	08054	B

Tekla structures

Approval is subject to approval of coordination package between multi-discipline.

REVIEWED WITH COMMENT
MONORAILS PROJECT

MATERIAL LIST FOR ASSEMBLY MK'D **Z8-BR033**

Mark	Profile	GRADE	No.	Length	Area	Weight
Z8-BR033	L60*6	S235JR	1	1504	0.36	8.07
				Total	0.36	8.07

BOLT LIST:-

BOLT \ STUD	BOLT DESCRIPTION	QTY	FINISH
BOLT	B1N2W 16 X 50 A325M	4	

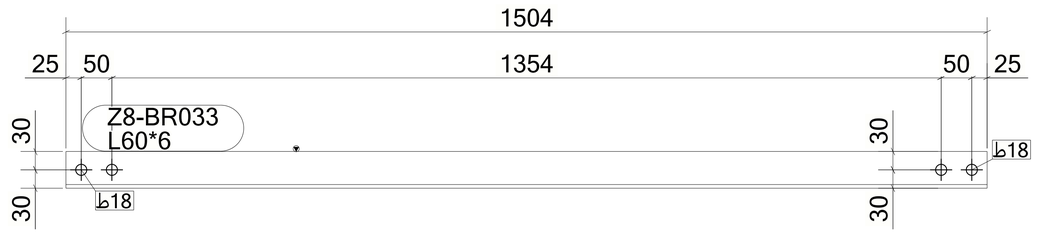

1 *REQUIRED AS DRAWN MARKED* **Z8-BR033**

6 October Monorail
Engineering Unit
Valid For Construction

GENERAL NOTES:

1. THE DIMENSIONS SHOWN ARE NOMINAL (IN MILLIMETERS), U.N.O.
2. WELD SIZESHALL BE AISC MINIMUM OF 6 mm UNLESS NOTED OTHERWISE.
3. ALL FIELD WELDS SHALL BE INSPECTED PER QUALITY ASSURANCE AND SPECIAL INSPECTIONS.

REFERENCE DRAWINGS

1	93M-BOA-NAT-LOT-04833
2	93M-BOA-NAT-LOT-09170
3	93M-BOA-NAT-LOT-01976
4	93M-BOA-NAT-LOT-20021
5	
6	
7	
8	
9	

6TH OF OCTOBER CITY RAIL TRANSIT MONORAIL

The Authority | Consultant: Hill International | Main Contractor: ORASCOM CONSTRUCTION, BOMBARDIER | Structural Designer: INNOVA TRANSPORTATION

KEY PLAN:

SCALE: AS SHOWN | SHOPDRAWING | DATE: 12/05/2023

REV	DATE	DSG.	CHK.	APP.	AMENDMENTS	STATUS
B	12/05/2023	M.KH	M.KH	DR.M.M	ISSUED FOR INFORMATION	IFI
A	11/20/2022	M.KH	M.KH	DR.M.M	ISSUED FOR INFORMATION	IFI

DRAWING TITLE
6TH OF OCTOBER MONORAIL
SERVICE WALKWAYS
ZONE (1008)
Z8-BR033

Project Code	Rubric	Initiator	Lot	Ref	Number	Revision
93M047	6ACC	60DE	P	DWG	08053	B

Tekla structures

Approval is subject to approval of coordination package between multi-discipline.

REVIEWED WITH COMMENT
MONORAILS PROJECT

MATERIAL LIST FOR ASSEMBLY MK'D **Z8-BR032**

Mark	Profile	GRADE	No.	Length	Area	Weight
Z8-BR032	L60*6	S235JR	1	1504	0.36	8.07
				Total	0.36	8.07

BOLT LIST:-

BOLT \ STUD	BOLT DESCRIPTION	QTY	FINISH
BOLT	B1N2W 16 X 50 A325M	4	

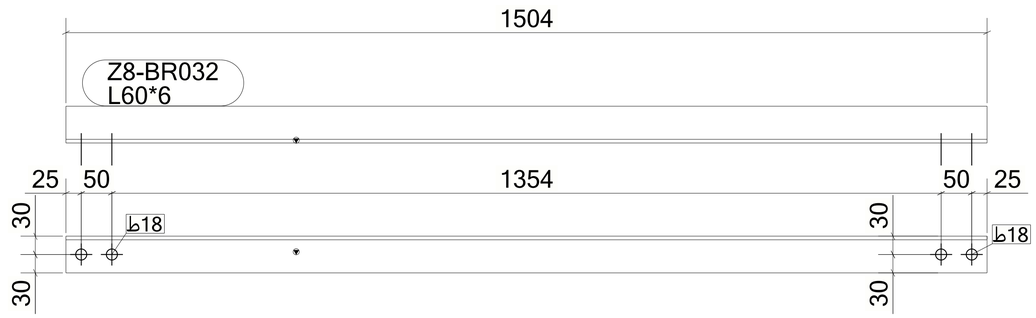

1 *REQUIRED AS DRAWN MARKED* **Z8-BR032**

GENERAL NOTES:

1. THE DIMENSIONS SHOWN ARE NOMINAL (IN MILLIMETERS), U.N.O.
2. WELD SIZESHALL BE AISC MINIMUM OF 6 mm UNLESS NOTED OTHERWISE.
3. ALL FIELD WELDS SHALL BE INSPECTED PER QUALITY ASSURANCE AND SPECIAL INSPECTIONS.

REFERENCE DRAWINGS

1	93M-BOA-NAT-LOT-04833
2	93M-BOA-NAT-LOT-09170
3	93M-BOA-NAT-LOT-01976
4	93M-BOA-NAT-LOT-20021
5	
6	
7	
8	
9	

6TH OF OCTOBER CITY RAIL TRANSIT MONORAIL

The Authority — Hill International Consultant — Main Contractor — Structural Designer

KEY PLAN:

6 October Monorail
Engineering Unit
Valid For Construction

SCALE	SHOPDRAWING	DATE
AS SHOWN		12/05/2023

REV	DATE	DSG.	CHK.	APP.	AMENDMENTS	STATUS
B	12/05/2023	M.KH	M.KH	DR.M.M	ISSUED FOR INFORMATION	IFI
A	11/20/2022	M.KH	M.KH	DR.M.M	ISSUED FOR INFORMATION	IFI

DRAWING TITLE
6TH OF OCTOBER MONORAIL
SERVICE WALKWAYS
ZONE (1008)
Z8-BR032

Project Code	Rubric	Initiator	Lot	Ref	Number	Revision
93	M047	6ACC	60	DEP	DWG0805	2 B

Tekla structures

Approval is subject to approval of coordination package between multi-discipline.

REVIEWED WITH COMMENT
MONORAILS PROJECT

MATERIAL LIST FOR ASSEMBLY MK'D **Z8-BR031**

Mark	Profile	GRADE	No.	Length	Area	Weight
Z8-BR031	L60*6	S235JR	1	1504	0.36	8.07
				Total	0.36	8.07

BOLT LIST:-

BOLT \ STUD	BOLT DESCRIPTION	QTY	FINISH
BOLT	B1N2W 16 X 50 A325M	4	

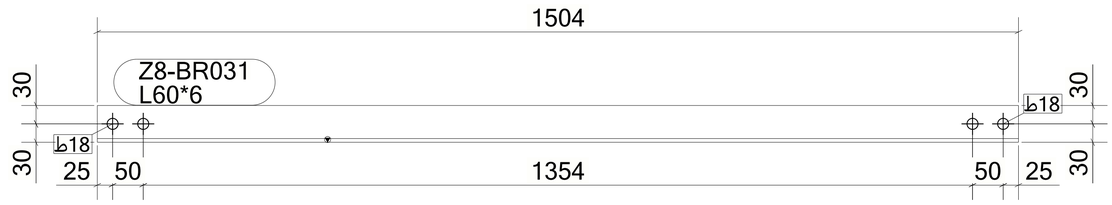

1 *REQUIRED AS DRAWN MARKED* **Z8-BR031**

6 October Monorail
Engineering Unit
Valid For Construction

GENERAL NOTES:

1. THE DIMENSIONS SHOWN ARE NOMINAL (IN MILLIMETERS), U.N.O.
2. WELD SIZESHALL BE AISC MINIMUM OF 6 mm UNLESS NOTED OTHERWISE.
3. ALL FIELD WELDS SHALL BE INSPECTED PER QUALITY ASSURANCE AND SPECIAL INSPECTIONS.

REFERENCE DRAWINGS

1	93M-BOA-NAT-LOT-04833
2	93M-BOA-NAT-LOT-09170
3	93M-BOA-NAT-LOT-01976
4	93M-BOA-NAT-LOT-20021
5	
6	
7	
8	
9	

6TH OF OCTOBER CITY RAIL TRANSIT MONORAIL

The Authority | Consultant: Hill International | Main Contractor: ORASCOM CONSTRUCTION, BOMBARDIER | Structural Designer: INNOVA TRANSPORTATION

KEY PLAN:

SCALE: AS SHOWN | SHOPDRAWING | DATE: 12/05/2023

REV	DATE	DSG.	CHK.	APP.	AMENDMENTS	STATUS
B	12/05/2023	M.KH	M.KH	DR.M.M	ISSUED FOR INFORMATION	IFI
A	11/20/2022	M.KH	M.KH	DR.M.M	ISSUED FOR INFORMATION	IFI

DRAWING TITLE
6TH OF OCTOBER MONORAIL
SERVICE WALKWAYS
ZONE (1008)
Z8-BR031

Project Code	Rubric	Initiator	Lot	Ref	Number	Revision
9 3 M 0 4 7 6	A C C	6 0 D E P	D W G	0 8 0 5 1		B

Tekla structures

Approval is subject to approval of coordination package between multi-discipline.

REVIEWED WITH COMMENT
MONORAILS PROJECT

MATERIAL LIST FOR ASSEMBLY MK'D **Z8-BR030**

Mark	Profile	GRADE	No.	Length	Area	Weight
Z8-BR030	L60*6	S235JR	1	1504	0.36	8.07
				Total	0.36	8.07

BOLT LIST:-

BOLT \ STUD	BOLT DESCRIPTION	QTY	FINISH
BOLT	B1N2W 16 X 50 A325M	4	

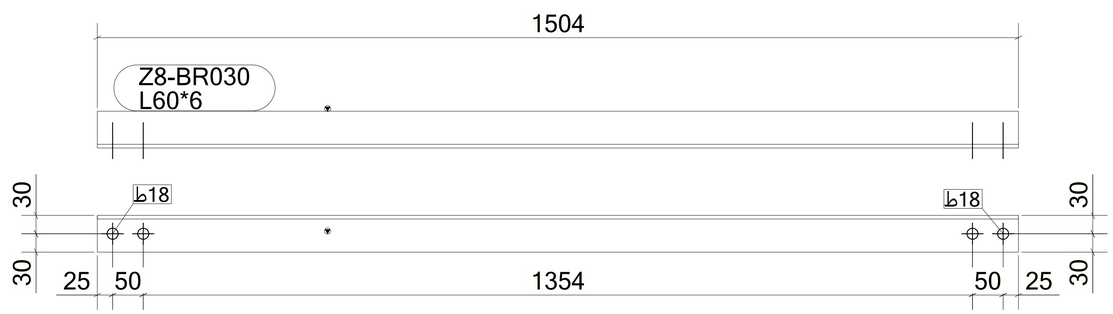

1 *REQUIRED AS DRAWN MARKED* **Z8-BR030**

GENERAL NOTES:

1. THE DIMENSIONS SHOWN ARE NOMINAL (IN MILLIMETERS), U.N.O.
2. WELD SIZESHALL BE AISC MINIMUM OF 6 mm UNLESS NOTED OTHERWISE.
3. ALL FIELD WELDS SHALL BE INSPECTED PER QUALITY ASSURANCE AND SPECIAL INSPECTIONS.

REFERENCE DRAWINGS

1	93M-BOA-NAT-LOT-04833
2	93M-BOA-NAT-LOT-09170
3	93M-BOA-NAT-LOT-01976
4	93M-BOA-NAT-LOT-20021
5	
6	
7	
8	
9	

6TH OF OCTOBER CITY RAIL TRANSIT MONORAIL

The Authority — Hill International Consultant — Main Contractor — Structural Designer

6 October Monorail
Engineering Unit
Valid For Construction

KEY PLAN:

SCALE	SHOPDRAWING	DATE
AS SHOWN		12/05/2023

REV	DATE	DSG.	CHK.	APP.	AMENDMENTS	STATUS
B	12/05/2023	M.KH	M.KH	DR.M.M	ISSUED FOR INFORMATION	IFI
A	11/20/2022	M.KH	M.KH	DR.M.M	ISSUED FOR INFORMATION	IFI

DRAWING TITLE
6TH OF OCTOBER MONORAIL
SERVICE WALKWAYS
ZONE (1008)
Z8-BR030

Project Code	Rubric	Initiator	Lot	Ref	Number	Revision
93	M047	6ACC	60DE	PDWG	0805	0 B

Tekla structures

Approval is subject to approval of coordination package between multi-discipline.

REVIEWED WITH COMMENT
MONORAILS PROJECT

MATERIAL LIST FOR ASSEMBLY MK'D **Z8-BR029**

Mark	Profile	GRADE	No.	Length	Area	Weight
Z8-BR029	L60*6	S235JR	1	1304	0.31	7.00
				Total	0.31	7.00

BOLT LIST:-

BOLT \ STUD	BOLT DESCRIPTION	QTY	FINISH
BOLT	B1N2W 16 X 50 A325M	4	

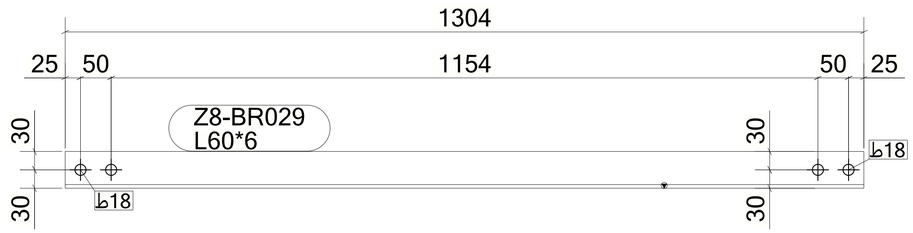

1 *REQUIRED AS DRAWN MARKED* **Z8-BR029**

6 October Monorail
Engineering Unit
Valid For Construction

GENERAL NOTES:

1. THE DIMENSIONS SHOWN ARE NOMINAL (IN MILLIMETERS), U.N.O.
2. WELD SIZESHALL BE AISC MINIMUM OF 6 mm UNLESS NOTED OTHERWISE.
3. ALL FIELD WELDS SHALL BE INSPECTED PER QUALITY ASSURANCE AND SPECIAL INSPECTIONS.

REFERENCE DRAWINGS

1	93M-BOA-NAT-LOT-04833
2	93M-BOA-NAT-LOT-09170
3	93M-BOA-NAT-LOT-01976
4	93M-BOA-NAT-LOT-20021
5	
6	
7	
8	
9	

6TH OF OCTOBER CITY RAIL TRANSIT MONORAIL

The Authority | Consultant: Hill International | Main Contractor: ORASCOM CONSTRUCTION, BOMBARDIER | Structural Designer: INNOVA TRANSPORTATION

KEY PLAN:

SCALE: AS SHOWN | SHOPDRAWING | DATE: 12/05/2023

REV	DATE	DSG.	CHK.	APP.	AMENDMENTS	STATUS
B	12/05/2023	M.KH	M.KH	DR.M.M	ISSUED FOR INFORMATION	IFI
A	11/20/2022	M.KH	M.KH	DR.M.M	ISSUED FOR INFORMATION	IFI

DRAWING TITLE
6TH OF OCTOBER MONORAIL
SERVICE WALKWAYS
ZONE (1008)
Z8-BR029

Project Code	Rubric	Initiator	Lot	Ref	Number	Revision
93M	047	6ACC	60DE	PDWG	08049	B

Tekla structures

Approval is subject to approval of coordination package between multi-discipline.

REVIEWED WITH COMMENT
MONORAILS PROJECT

MATERIAL LIST FOR ASSEMBLY MK'D **Z8-BR028**

Mark	Profile	GRADE	No.	Length	Area	Weight
Z8-BR028	L60*6	S235JR	1	1304	0.31	7.00
				Total	0.31	7.00

BOLT LIST:-

BOLT \ STUD	BOLT DESCRIPTION	QTY	FINISH
BOLT	B1N2W 16 X 50 A325M	4	

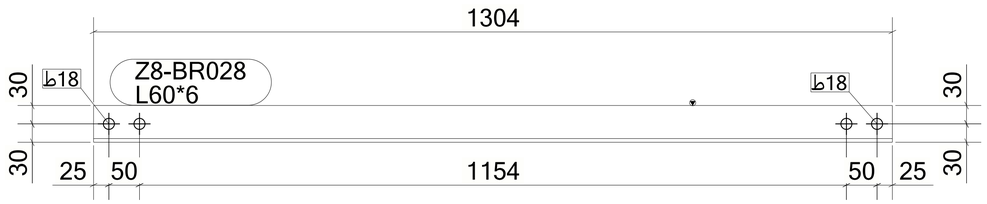

1 *REQUIRED AS DRAWN MARKED* **Z8-BR028**

6 October Monorail
Engineering Unit
Valid For Construction

GENERAL NOTES:

1. THE DIMENSIONS SHOWN ARE NOMINAL (IN MILLIMETERS), U.N.O.
2. WELD SIZESHALL BE AISC MINIMUM OF 6 mm UNLESS NOTED OTHERWISE.
3. ALL FIELD WELDS SHALL BE INSPECTED PER QUALITY ASSURANCE AND SPECIAL INSPECTIONS.

REFERENCE DRAWINGS

1	93M-BOA-NAT-LOT-04833
2	93M-BOA-NAT-LOT-09170
3	93M-BOA-NAT-LOT-01976
4	93M-BOA-NAT-LOT-20021
5	
6	
7	
8	
9	

6TH OF OCTOBER CITY RAIL TRANSIT MONORAIL

The Authority | Consultant: Hill International | Main Contractor: ORASCOM CONSTRUCTION, BOMBARDIER | Structural Designer: INNOVA TRANSPORTATION

KEY PLAN:

SCALE	SHOPDRAWING	DATE
AS SHOWN		12/05/2023

REV	DATE	DSG.	CHK.	APP.	AMENDMENTS	STATUS
B	12/05/2023	M.KH	M.KH	DR.M.M	ISSUED FOR INFORMATION	IFI
A	11/20/2022	M.KH	M.KH	DR.M.M	ISSUED FOR INFORMATION	IFI

DRAWING TITLE
6TH OF OCTOBER MONORAIL
SERVICE WALKWAYS
ZONE (1008)
Z8-BR028

Project Code	Rubric	Initiator	Lot	Ref	Number	Revision
9 3 M 0 4 7 6	A C C	6 0 D E P	D W G	0 8 0 4 8		B

Tekla structures

Approval is subject to approval of coordination package between multi-discipline.

REVIEWED WITH COMMENT
MONORAILS PROJECT

MATERIAL LIST FOR ASSEMBLY MK'D **Z8-BR027**

Mark	Profile	GRADE	No.	Length	Area	Weight
Z8-BR027	L60*6	S235JR	1	1331	0.32	7.14
				Total	0.32	7.14

BOLT LIST:-

BOLT \ STUD	BOLT DESCRIPTION	QTY	FINISH
BOLT	B1N2W 16 X 50 A325M	4	

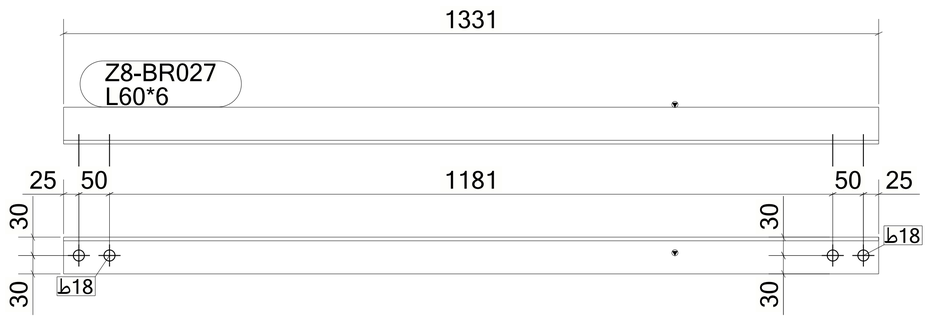

1 *REQUIRED AS DRAWN MARKED* **Z8-BR027**

GENERAL NOTES:

1. THE DIMENSIONS SHOWN ARE NOMINAL (IN MILLIMETERS), U.N.O.
2. WELD SIZESHALL BE AISC MINIMUM OF 6 mm UNLESS NOTED OTHERWISE.
3. ALL FIELD WELDS SHALL BE INSPECTED PER QUALITY ASSURANCE AND SPECIAL INSPECTIONS.

REFERENCE DRAWINGS

1	93M-BOA-NAT-LOT-04833
2	93M-BOA-NAT-LOT-09170
3	93M-BOA-NAT-LOT-01976
4	93M-BOA-NAT-LOT-20021
5	
6	
7	
8	
9	

6TH OF OCTOBER CITY RAIL TRANSIT MONORAIL

The Authority — Hill International Consultant — Main Contractor — Structural Designer

KEY PLAN:

6 October Monorail
Engineering Unit
Valid For Construction

SCALE: AS SHOWN | SHOPDRAWING | DATE: 12/05/2023

REV	DATE	DSG.	CHK.	APP.	AMENDMENTS	STATUS
B	12/05/2023	M.KH	M.KH	DR.M.M	ISSUED FOR INFORMATION	IFI
A	11/20/2022	M.KH	M.KH	DR.M.M	ISSUED FOR INFORMATION	IFI

DRAWING TITLE
6TH OF OCTOBER MONORAIL
SERVICE WALKWAYS
ZONE (1008)
Z8-BR027

Project Code	Rubric	Initiator	Lot	Ref	Number	Revision
93M	047	6ACC	60DE	PDWG	08047	B

Tekla structures

Approval is subject to approval of coordination package between multi-discipline.

REVIEWED WITH COMMENT
MONORAILS PROJECT

MATERIAL LIST FOR ASSEMBLY MK'D **Z8-BR026**

Mark	Profile	GRADE	No.	Length	Area	Weight
Z8-BR026	L60*6	S235JR	1	1331	0.32	7.15
				Total	0.32	7.15

BOLT LIST:-

BOLT \ STUD	BOLT DESCRIPTION	QTY	FINISH
BOLT	B1N2W 16 X 50 A325M	4	

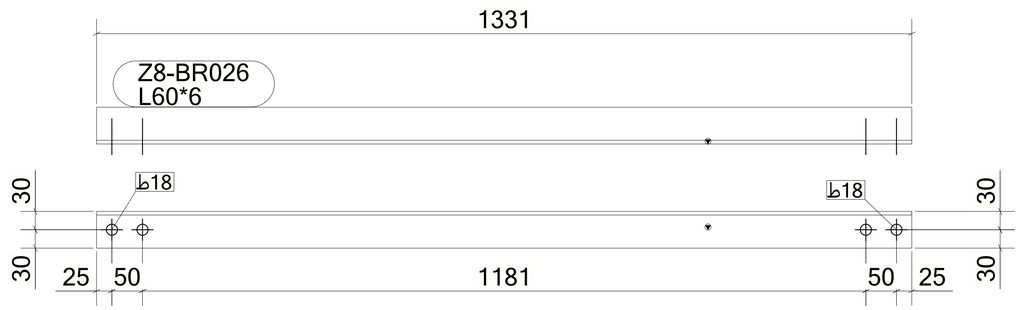

1 *REQUIRED AS DRAWN MARKED* **Z8-BR026**

GENERAL NOTES:

1. THE DIMENSIONS SHOWN ARE NOMINAL (IN MILLIMETERS), U.N.O.
2. WELD SIZESHALL BE AISC MINIMUM OF 6 mm UNLESS NOTED OTHERWISE.
3. ALL FIELD WELDS SHALL BE INSPECTED PER QUALITY ASSURANCE AND SPECIAL INSPECTIONS.

REFERENCE DRAWINGS

1	93M-BOA-NAT-LOT-04833
2	93M-BOA-NAT-LOT-09170
3	93M-BOA-NAT-LOT-01976
4	93M-BOA-NAT-LOT-20021
5	
6	
7	
8	
9	

6TH OF OCTOBER CITY RAIL TRANSIT MONORAIL

The Authority — Hill International Consultant — Main Contractor — Structural Designer

KEY PLAN:

6 October Monorail
Engineering Unit
Valid For Construction

SCALE: AS SHOWN | SHOPDRAWING | DATE: 12/05/2023

REV	DATE	DSG.	CHK.	APP.	AMENDMENTS	STATUS
B	12/05/2023	M.KH	M.KH	DR.M.M	ISSUED FOR INFORMATION	IFI
A	11/20/2022	M.KH	M.KH	DR.M.M	ISSUED FOR INFORMATION	IFI

DRAWING TITLE
6TH OF OCTOBER MONORAIL
SERVICE WALKWAYS
ZONE (1008)
Z8-BR026

Project Code	Rubric	Initiator	Lot	Ref	Number	Revision
93M	047	6ACC	60DE	PDWG	08046	B

Tekla structures

Approval is subject to approval of coordination package between multi-discipline.

REVIEWED WITH COMMENT MONORAILS PROJECT

MATERIAL LIST FOR ASSEMBLY MK'D **Z8-BR025**

Mark	Profile	GRADE	No.	Length	Area	Weight
Z8-BR025	L70X70X7	S235JR	1	979	0.27	7.23
W515	PL8*50	S355JR	1	70	0.01	0.22
				Total	0.28	7.45

BOLT LIST:-

BOLT \ STUD	BOLT DESCRIPTION	QTY	FINISH
BOLT	B1N2W 16 X 50 A325M	1	

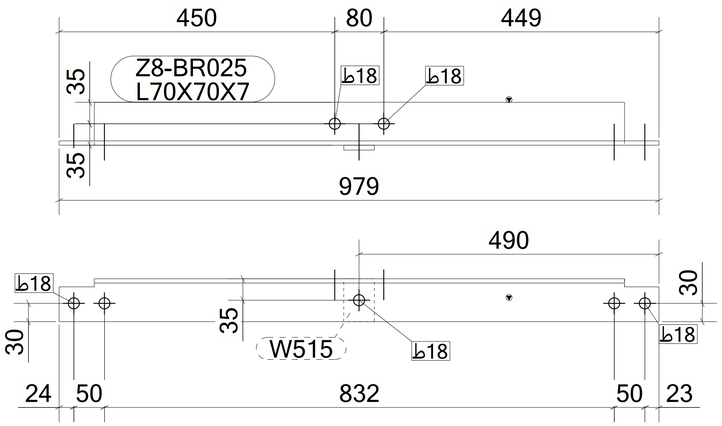

3 *REQUIRED AS DRAWN MARKED* **Z8-BR025**

6 October Monorail Engineering Unit
Valid For Construction

GENERAL NOTES:

1. THE DIMENSIONS SHOWN ARE NOMINAL (IN MILLIMETERS), U.N.O.
2. WELD SIZESHALL BE AISC MINIMUM OF 6 mm UNLESS NOTED OTHERWISE.
3. ALL FIELD WELDS SHALL BE INSPECTED PER QUALITY ASSURANCE AND SPECIAL INSPECTIONS.

REFERENCE DRAWINGS

1	93M-BOA-NAT-LOT-04833
2	93M-BOA-NAT-LOT-09170
3	93M-BOA-NAT-LOT-01976
4	93M-BOA-NAT-LOT-20021
5	
6	
7	
8	
9	

6TH OF OCTOBER CITY RAIL TRANSIT MONORAIL

The Authority | Hill International Consultant | ORASCOM BOMBARDIER Main Contractor | INNOVA Structural Designer

KEY PLAN:

SCALE	SHOPDRAWING	DATE
AS SHOWN		12/05/2023

REV	DATE	DSG.	CHK.	APP.	AMENDMENTS	STATUS
B	12/05/2023	M.KH	M.KH	DR.M.M	ISSUED FOR INFORMATION	IFI
A	11/20/2022	M.KH	M.KH	DR.M.M	ISSUED FOR INFORMATION	IFI

DRAWING TITLE
6TH OF OCTOBER MONORAIL
SERVICE WALKWAYS
ZONE (1008)
Z8-BR025

Project Code	Rubric	Initiator	Lot	Ref	Number	Revision
93M	0476	ACC	60DEP	DWG	08045	B

Tekla structures

Approval is subject to approval of coordination package between multi-discipline.

REVIEWED WITH COMMENT
MONORAILS PROJECT

MATERIAL LIST FOR ASSEMBLY MK'D **Z8-BR024**

Mark	Profile	GRADE	No.	Length	Area	Weight
Z8-BR024	L70X70X7	S235JR	1	979	0.27	7.23
				Total	0.27	7.23

BOLT LIST:-

BOLT \ STUD	BOLT DESCRIPTION	QTY	FINISH
BOLT	B1N2W 16 X 40 A325M	1	

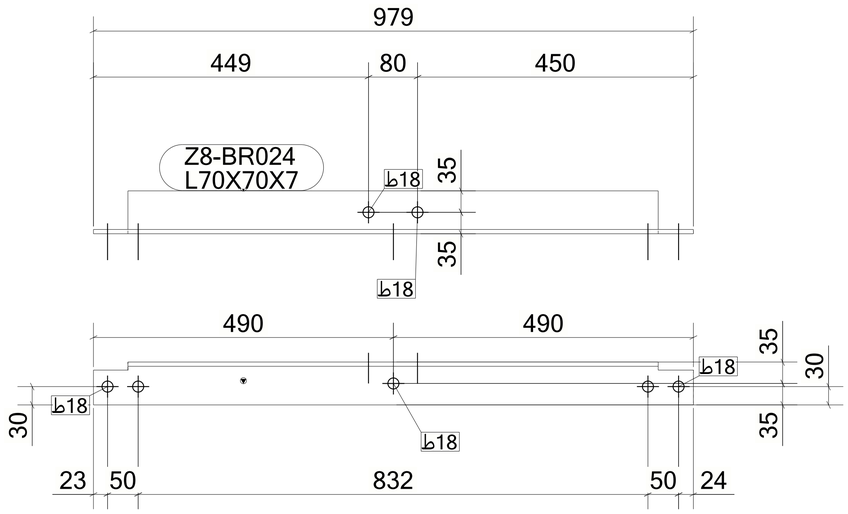

8 *REQUIRED AS DRAWN MARKED* **Z8-BR024**

GENERAL NOTES:

1. THE DIMENSIONS SHOWN ARE NOMINAL (IN MILLIMETERS), U.N.O.
2. WELD SIZESHALL BE AISC MINIMUM OF 6 mm UNLESS NOTED OTHERWISE.
3. ALL FIELD WELDS SHALL BE INSPECTED PER QUALITY ASSURANCE AND SPECIAL INSPECTIONS.

REFERENCE DRAWINGS

1	93M-BOA-NAT-LOT-04833
2	93M-BOA-NAT-LOT-09170
3	93M-BOA-NAT-LOT-01976
4	93M-BOA-NAT-LOT-20021
5	
6	
7	
8	
9	

6TH OF OCTOBER CITY RAIL TRANSIT MONORAIL

The Authority | Consultant: Hill International | Main Contractor: ORASCOM CONSTRUCTION, BOMBARDIER | Structural Designer: INNOVA TRANSPORTATION

KEY PLAN:

6 October Monorail
Engineering Unit
Valid For Construction

SCALE: AS SHOWN | SHOPDRAWING | DATE: 12/05/2023

REV	DATE	DSG.	CHK.	APP.	AMENDMENTS	STATUS
B	12/05/2023	M.KH	M.KH	DR.M.M	ISSUED FOR INFORMATION	IFI
A	11/20/2022	M.KH	M.KH	DR.M.M	ISSUED FOR INFORMATION	IFI

DRAWING TITLE
6TH OF OCTOBER MONORAIL
SERVICE WALKWAYS
ZONE (1008)
Z8-BR024

Project Code	Rubric	Initiator	Lot	Ref	Number	Revision
9 3 M 0 4 7 6	A C C	6 0 D E P	D W G	0 8 0 4 4		B

Tekla structures

Approval is subject to approval of coordination package between multi-discipline.

REVIEWED WITH COMMENT
MONORAILS PROJECT

MATERIAL LIST FOR ASSEMBLY MK'D **Z8-BR023**

Mark	Profile	GRADE	No.	Length	Area	Weight
Z8-BR023	L70X70X7	S235JR	1	979	0.27	7.23
W344	PL8*50	S355JR	1	70	0.01	0.22
				Total	0.28	7.45

BOLT LIST:-

BOLT \ STUD	BOLT DESCRIPTION		QTY	FINISH
BOLT	B1N2W 16 X 40	A325M	1	
BOLT	B1N2W 16 X 50	A325M	1	

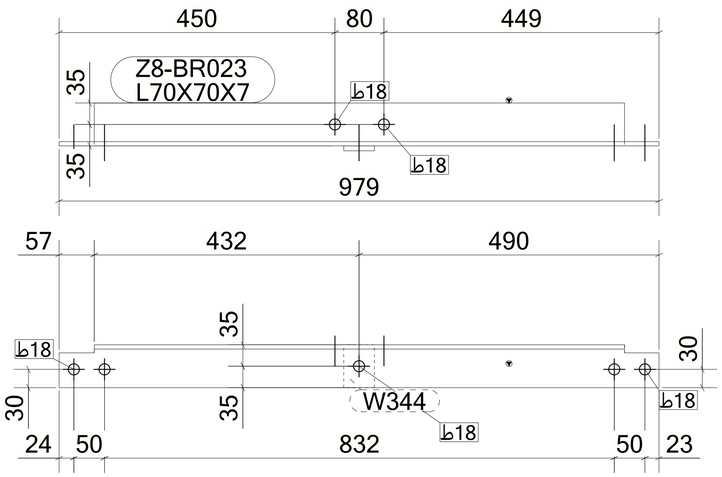

4 *REQUIRED AS DRAWN MARKED* **Z8-BR023**

6 October Monorail
Engineering Unit
Valid For Construction

GENERAL NOTES:

1. THE DIMENSIONS SHOWN ARE NOMINAL (IN MILLIMETERS), U.N.O.
2. WELD SIZESHALL BE AISC MINIMUM OF 6 mm UNLESS NOTED OTHERWISE.
3. ALL FIELD WELDS SHALL BE INSPECTED PER QUALITY ASSURANCE AND SPECIAL INSPECTIONS.

REFERENCE DRAWINGS

1	93M-BOA-NAT-LOT-04833
2	93M-BOA-NAT-LOT-09170
3	93M-BOA-NAT-LOT-01976
4	93M-BOA-NAT-LOT-20021
5	
6	
7	
8	
9	

6TH OF OCTOBER CITY RAIL TRANSIT MONORAIL

The Authority | Hill International Consultant | Main Contractor | Structural Designer

KEY PLAN:

SCALE	SHOPDRAWING	DATE
AS SHOWN		12/05/2023

REV	DATE	DSG.	CHK.	APP.	AMENDMENTS	STATUS
B	12/05/2023	M.KH	M.KH	DR.M.M	ISSUED FOR INFORMATION	IFI
A	11/20/2022	M.KH	M.KH	DR.M.M	ISSUED FOR INFORMATION	IFI

DRAWING TITLE
6TH OF OCTOBER MONORAIL
SERVICE WALKWAYS
ZONE (1008)
Z8-BR023

Project Code	Rubric	Initiator	Lot	Ref	Number	Revision
9 3 M	0 4 7 6	A C C	6 0 D E P	D W G	0 8 0 4 3	B

Tekla structures

Approval is subject to approval of coordination package between multi-discipline.

REVIEWED WITH COMMENT
MONORAILS PROJECT

MATERIAL LIST FOR ASSEMBLY MK'D **Z8-BR022**

Mark	Profile	GRADE	No.	Length	Area	Weight
Z8-BR022	L60*6	S235JR	1	1528	0.37	8.20
				Total	0.37	8.20

BOLT LIST:-

BOLT \ STUD	BOLT DESCRIPTION	QTY	FINISH
BOLT	B1N2W 16 X 50 A325M	4	

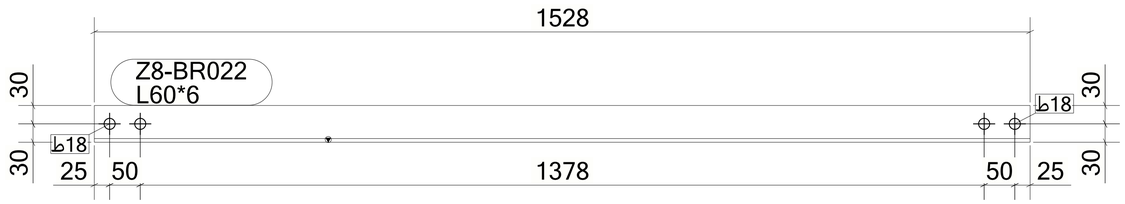

2 *REQUIRED AS DRAWN MARKED* **Z8-BR022**

6 October Monorail
Engineering Unit
Valid For Construction

GENERAL NOTES:

1. THE DIMENSIONS SHOWN ARE NOMINAL (IN MILLIMETERS), U.N.O.
2. WELD SIZESHALL BE AISC MINIMUM OF 6 mm UNLESS NOTED OTHERWISE.
3. ALL FIELD WELDS SHALL BE INSPECTED PER QUALITY ASSURANCE AND SPECIAL INSPECTIONS.

REFERENCE DRAWINGS

1	93M-BOA-NAT-LOT-04833
2	93M-BOA-NAT-LOT-09170
3	93M-BOA-NAT-LOT-01976
4	93M-BOA-NAT-LOT-20021
5	
6	
7	
8	
9	

6TH OF OCTOBER CITY RAIL TRANSIT MONORAIL

The Authority | Hill International Consultant | Main Contractor | Structural Designer

KEY PLAN:

SCALE: AS SHOWN | SHOPDRAWING | DATE: 12/05/2023

REV	DATE	DSG.	CHK.	APP.	AMENDMENTS	STATUS
B	12/05/2023	M.KH	M.KH	DR.M.M	ISSUED FOR INFORMATION	IFI
A	11/20/2022	M.KH	M.KH	DR.M.M	ISSUED FOR INFORMATION	IFI

DRAWING TITLE
6TH OF OCTOBER MONORAIL
SERVICE WALKWAYS
ZONE (1008)
Z8-BR022

Project Code	Rubric	Initiator	Lot	Ref	Number	Revision
9 3 M 0 4 7 6	A C C	6 0 D E P	D W G	0 8 0 4 2		B

Tekla structures

Approval is subject to approval of coordination package between multi-discipline.

REVIEWED WITH COMMENT
MONORAILS PROJECT

MATERIAL LIST FOR ASSEMBLY MK'D **Z8-BR021**

Mark	Profile	GRADE	No.	Length	Area	Weight
Z8-BR021	L60*6	S235JR	1	1528	0.37	8.20
				Total	0.37	8.20

BOLT LIST:-

BOLT \ STUD	BOLT DESCRIPTION	QTY	FINISH
BOLT	B1N2W 16 X 50 A325M	4	

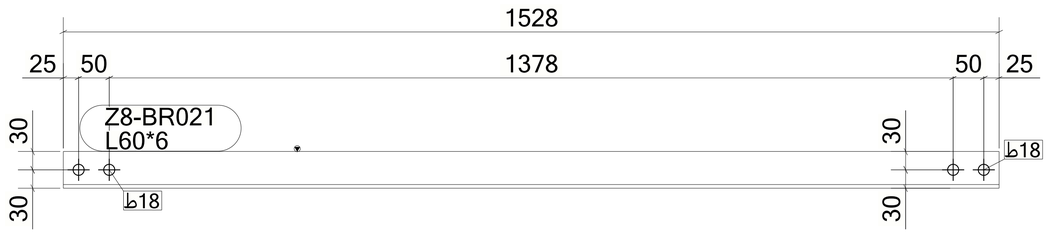

2 *REQUIRED AS DRAWN MARKED* **Z8-BR021**

6 October Monorail
Engineering Unit
Valid For Construction

GENERAL NOTES:

1. THE DIMENSIONS SHOWN ARE NOMINAL (IN MILLIMETERS), U.N.O.
2. WELD SIZESHALL BE AISC MINIMUM OF 6 mm UNLESS NOTED OTHERWISE.
3. ALL FIELD WELDS SHALL BE INSPECTED PER QUALITY ASSURANCE AND SPECIAL INSPECTIONS.

REFERENCE DRAWINGS

1	93M-BOA-NAT-LOT-04833
2	93M-BOA-NAT-LOT-09170
3	93M-BOA-NAT-LOT-01976
4	93M-BOA-NAT-LOT-20021
5	
6	
7	
8	
9	

6TH OF OCTOBER CITY RAIL TRANSIT MONORAIL

The Authority | Consultant: Hill International | Main Contractor: ORASCOM CONSTRUCTION, BOMBARDIER | Structural Designer: INNOVA TRANSPORTATION

KEY PLAN:

SCALE: AS SHOWN | SHOPDRAWING | DATE: 12/05/2023

REV	DATE	DSG.	CHK.	APP.	AMENDMENTS	STATUS
B	12/05/2023	M.KH	M.KH	DR.M.M	ISSUED FOR INFORMATION	IFI
A	11/20/2022	M.KH	M.KH	DR.M.M	ISSUED FOR INFORMATION	IFI

DRAWING TITLE
6TH OF OCTOBER MONORAIL
SERVICE WALKWAYS
ZONE (1008)
Z8-BR021

Project Code	Rubric	Initiator	Lot	Ref	Number	Revision
9 3 M 0	4 7 6	A C C	6 0 D E	P D W G	0 8 0 4 1	B

Tekla structures

Approval is subject to approval of coordination package between multi-discipline.

REVIEWED WITH COMMENT
MONORAILS PROJECT

MATERIAL LIST FOR ASSEMBLY MK'D **Z8-BR020**

Mark	Profile	GRADE	No.	Length	Area	Weight
Z8-BR020	L60*6	S235JR	1	1528	0.37	8.20
				Total	0.37	8.20

BOLT LIST:-

BOLT \ STUD	BOLT DESCRIPTION	QTY	FINISH
BOLT	B1N2W 16 X 50 A325M	4	

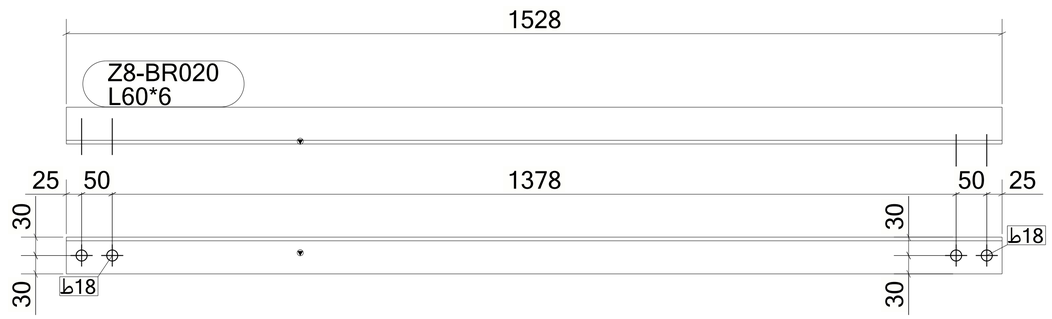

2 *REQUIRED AS DRAWN MARKED* **Z8-BR020**

GENERAL NOTES:

1. THE DIMENSIONS SHOWN ARE NOMINAL (IN MILLIMETERS), U.N.O.
2. WELD SIZESHALL BE AISC MINIMUM OF 6 mm UNLESS NOTED OTHERWISE.
3. ALL FIELD WELDS SHALL BE INSPECTED PER QUALITY ASSURANCE AND SPECIAL INSPECTIONS.

REFERENCE DRAWINGS

1	93M-BOA-NAT-LOT-04833
2	93M-BOA-NAT-LOT-09170
3	93M-BOA-NAT-LOT-01976
4	93M-BOA-NAT-LOT-20021
5	
6	
7	
8	
9	

6TH OF OCTOBER CITY RAIL TRANSIT MONORAIL

The Authority — Hill International Consultant — Main Contractor — Structural Designer

KEY PLAN:

6 October Monorail
Engineering Unit
Valid For Construction

SCALE: AS SHOWN | SHOPDRAWING | DATE: 12/05/2023

REV	DATE	DSG.	CHK.	APP.	AMENDMENTS	STATUS
B	12/05/2023	M.KH	M.KH	DR.M.M	ISSUED FOR INFORMATION	IFI
A	11/20/2022	M.KH	M.KH	DR.M.M	ISSUED FOR INFORMATION	IFI

DRAWING TITLE
6TH OF OCTOBER MONORAIL
SERVICE WALKWAYS
ZONE (1008)
Z8-BR020

Project Code	Rubric	Initiator	Lot	Ref	Number	Revision
93M	047	6ACC	60DE	PDWG	0804	B

Tekla structures

Approval is subject to approval of coordination package between multi-discipline.

REVIEWED WITH COMMENT
MONORAILS PROJECT

MATERIAL LIST FOR ASSEMBLY MK'D **Z8-BR019**

Mark	Profile	GRADE	No.	Length	Area	Weight
Z8-BR019	L60*6	S235JR	1	1528	0.37	8.20
				Total	0.37	8.20

BOLT LIST:-

BOLT \ STUD	BOLT DESCRIPTION	QTY	FINISH
BOLT	B1N2W 16 X 50 A325M	4	

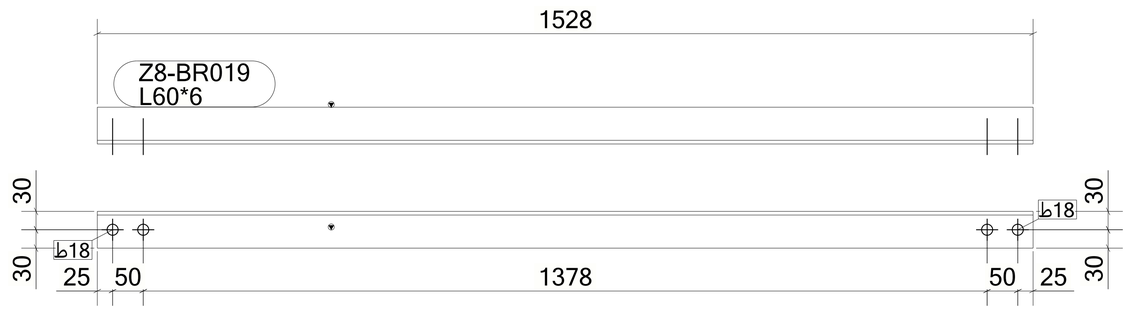

2 *REQUIRED AS DRAWN MARKED* **Z8-BR019**

6 October Monorail
Engineering Unit
Valid For Construction

GENERAL NOTES:

1. THE DIMENSIONS SHOWN ARE NOMINAL (IN MILLIMETERS), U.N.O.
2. WELD SIZESHALL BE AISC MINIMUM OF 6 mm UNLESS NOTED OTHERWISE.
3. ALL FIELD WELDS SHALL BE INSPECTED PER QUALITY ASSURANCE AND SPECIAL INSPECTIONS.

REFERENCE DRAWINGS

1	93M-BOA-NAT-LOT-04833
2	93M-BOA-NAT-LOT-09170
3	93M-BOA-NAT-LOT-01976
4	93M-BOA-NAT-LOT-20021
5	
6	
7	
8	
9	

6TH OF OCTOBER CITY RAIL TRANSIT MONORAIL

The Authority — Hill International Consultant — Main Contractor — Structural Designer

KEY PLAN:

SCALE	SHOPDRAWING	DATE
AS SHOWN		12/05/2023

REV	DATE	DSG.	CHK.	APP.	AMENDMENTS	STATUS
B	12/05/2023	M.KH	M.KH	DR.M.M	ISSUED FOR INFORMATION	IFI
A	11/20/2022	M.KH	M.KH	DR.M.M	ISSUED FOR INFORMATION	IFI

DRAWING TITLE
6TH OF OCTOBER MONORAIL
SERVICE WALKWAYS
ZONE (1008)
Z8-BR019

Project Code	Rubric	Initiator	Lot	Ref	Number	Revision
93	M047	6ACC	60DE	PDWG	0803	9 B

Tekla structures

Approval is subject to approval of coordination package between multi-discipline.

REVIEWED WITH COMMENT
MONORAILS PROJECT

MATERIAL LIST FOR ASSEMBLY MK'D **Z8-BR018**

Mark	Profile	GRADE	No.	Length	Area	Weight
Z8-BR018	L60*6	S235JR	1	1504	0.36	8.07
				Total	0.36	8.07

BOLT LIST:-

BOLT \ STUD	BOLT DESCRIPTION	QTY	FINISH
BOLT	B1N2W 16 X 50 A325M	4	

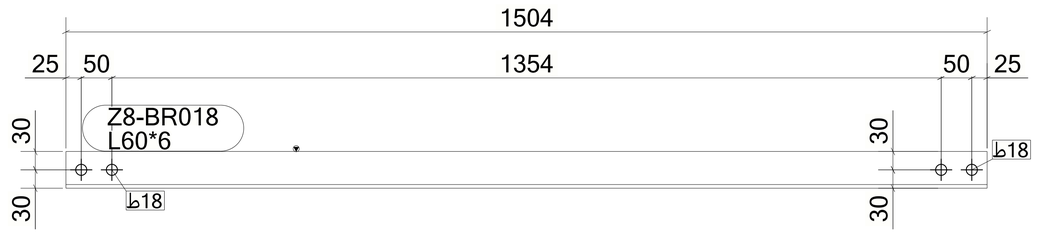

2 *REQUIRED AS DRAWN MARKED* **Z8-BR018**

6 October Monorail
Engineering Unit
Valid For Construction

GENERAL NOTES:

1. THE DIMENSIONS SHOWN ARE NOMINAL (IN MILLIMETERS), U.N.O.
2. WELD SIZESHALL BE AISC MINIMUM OF 6 mm UNLESS NOTED OTHERWISE.
3. ALL FIELD WELDS SHALL BE INSPECTED PER QUALITY ASSURANCE AND SPECIAL INSPECTIONS.

REFERENCE DRAWINGS

1	93M-BOA-NAT-LOT-04833
2	93M-BOA-NAT-LOT-09170
3	93M-BOA-NAT-LOT-01976
4	93M-BOA-NAT-LOT-20021
5	
6	
7	
8	
9	

6TH OF OCTOBER CITY RAIL TRANSIT MONORAIL

The Authority | Consultant: Hill International | Main Contractor: ORASCOM CONSTRUCTION, BOMBARDIER | Structural Designer: INNOVA TRANSPORTATION

KEY PLAN:

SCALE: AS SHOWN | SHOPDRAWING | DATE: 12/05/2023

REV	DATE	DSG.	CHK.	APP.	AMENDMENTS	STATUS
B	12/05/2023	M.KH	M.KH	DR.M.M	ISSUED FOR INFORMATION	IFI
A	11/20/2022	M.KH	M.KH	DR.M.M	ISSUED FOR INFORMATION	IFI

DRAWING TITLE
6TH OF OCTOBER MONORAIL
SERVICE WALKWAYS
ZONE (1008)
Z8-BR018

Project Code	Rubric	Initiator	Lot	Ref	Number	Revision
93M0476	ACC	60DEP	DWG	0803	8	B

Tekla structures

Approval is subject to approval of coordination package between multi-discipline.

REVIEWED WITH COMMENT
MONORAILS PROJECT

MATERIAL LIST FOR ASSEMBLY MK'D **Z8-BR017**

Mark	Profile	GRADE	No.	Length	Area	Weight
Z8-BR017	L60*6	S235JR	1	1504	0.36	8.07
				Total	0.36	8.07

BOLT LIST:-

BOLT \ STUD	BOLT DESCRIPTION	QTY	FINISH
BOLT	B1N2W 16 X 50 A325M	4	

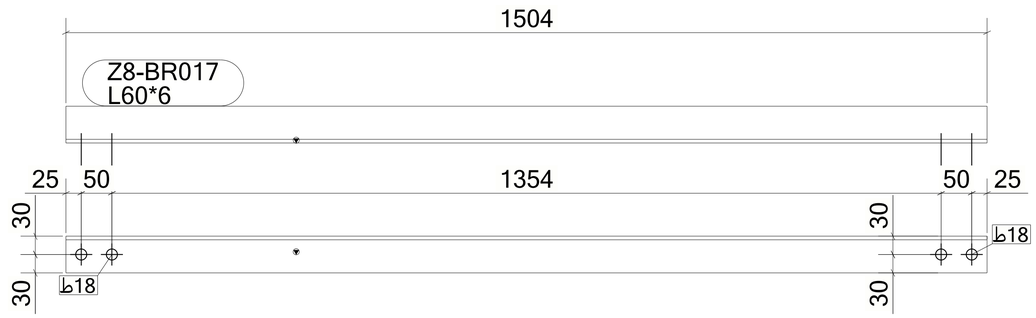

2 *REQUIRED AS DRAWN MARKED* **Z8-BR017**

GENERAL NOTES:

1. THE DIMENSIONS SHOWN ARE NOMINAL (IN MILLIMETERS), U.N.O.
2. WELD SIZESHALL BE AISC MINIMUM OF 6 mm UNLESS NOTED OTHERWISE.
3. ALL FIELD WELDS SHALL BE INSPECTED PER QUALITY ASSURANCE AND SPECIAL INSPECTIONS.

REFERENCE DRAWINGS

1	93M-BOA-NAT-LOT-04833
2	93M-BOA-NAT-LOT-09170
3	93M-BOA-NAT-LOT-01976
4	93M-BOA-NAT-LOT-20021
5	
6	
7	
8	
9	

6TH OF OCTOBER CITY RAIL TRANSIT MONORAIL

The Authority — Hill International Consultant — Main Contractor — Structural Designer

KEY PLAN:

6 October Monorail
Engineering Unit
Valid For Construction

SCALE	SHOPDRAWING	DATE
AS SHOWN		12/05/2023

REV	DATE	DSG.	CHK.	APP.	AMENDMENTS	STATUS
B	12/05/2023	M.KH	M.KH	DR.M.M	ISSUED FOR INFORMATION	IFI
A	11/20/2022	M.KH	M.KH	DR.M.M	ISSUED FOR INFORMATION	IFI

DRAWING TITLE
6TH OF OCTOBER MONORAIL
SERVICE WALKWAYS
ZONE (1008)
Z8-BR017

Project Code	Rubric	Initiator	Lot	Ref	Number	Revision
93	M047	6ACC	60	DEP	DWG0803	7 B

Tekla structures

Approval is subject to approval of coordination package between multi-discipline.

REVIEWED WITH COMMENT
MONORAILS PROJECT

MATERIAL LIST FOR ASSEMBLY MK'D **Z8-BR016**

Mark	Profile	GRADE	No.	Length	Area	Weight
Z8-BR016	L60*6	S235JR	1	1504	0.36	8.07
				Total	0.36	8.07

BOLT LIST:-

BOLT \ STUD	BOLT DESCRIPTION	QTY	FINISH
BOLT	B1N2W 16 X 50 A325M	4	

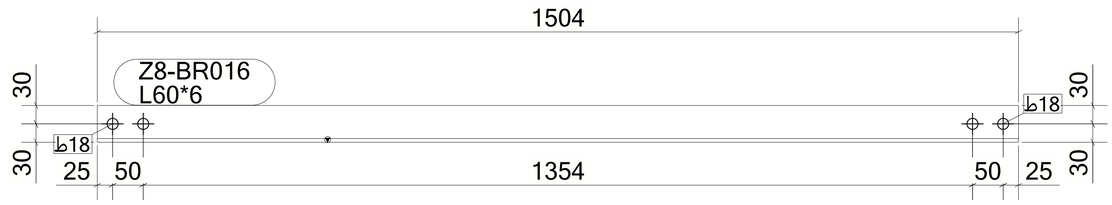

2 *REQUIRED AS DRAWN MARKED* **Z8-BR016**

6 October Monorail
Engineering Unit
Valid For Construction

GENERAL NOTES:

1. THE DIMENSIONS SHOWN ARE NOMINAL (IN MILLIMETERS), U.N.O.
2. WELD SIZESHALL BE AISC MINIMUM OF 6 mm UNLESS NOTED OTHERWISE.
3. ALL FIELD WELDS SHALL BE INSPECTED PER QUALITY ASSURANCE AND SPECIAL INSPECTIONS.

REFERENCE DRAWINGS

1	93M-BOA-NAT-LOT-04833
2	93M-BOA-NAT-LOT-09170
3	93M-BOA-NAT-LOT-01976
4	93M-BOA-NAT-LOT-20021
5	
6	
7	
8	
9	

6TH OF OCTOBER CITY RAIL TRANSIT MONORAIL

The Authority | Consultant: Hill International | Main Contractor: ORASCOM CONSTRUCTION, BOMBARDIER | Structural Designer: INNOVA TRANSPORTATION

KEY PLAN:

SCALE: AS SHOWN | SHOPDRAWING | DATE: 12/05/2023

REV	DATE	DSG.	CHK.	APP.	AMENDMENTS	STATUS
B	12/05/2023	M.KH	M.KH	DR.M.M	ISSUED FOR INFORMATION	IFI
A	11/20/2022	M.KH	M.KH	DR.M.M	ISSUED FOR INFORMATION	IFI

DRAWING TITLE
6TH OF OCTOBER MONORAIL
SERVICE WALKWAYS
ZONE (1008)
Z8-BR016

Project Code	Rubric	Initiator	Lot	Ref	Number	Revision
9 3 M 0 4 7 6	A C C	6 0 D E P	D W G		0 8 0 3 6	B

Tekla structures

Approval is subject to approval of coordination package between multi-discipline.

REVIEWED WITH COMMENT
MONORAILS PROJECT

MATERIAL LIST FOR ASSEMBLY MK'D **Z8-BR015**

Mark	Profile	GRADE	No.	Length	Area	Weight
Z8-BR015	L60*6	S235JR	1	1504	0.36	8.07
				Total	0.36	8.07

BOLT LIST:-

BOLT \ STUD	BOLT DESCRIPTION	QTY	FINISH
BOLT	B1N2W 16 X 50 A325M	4	

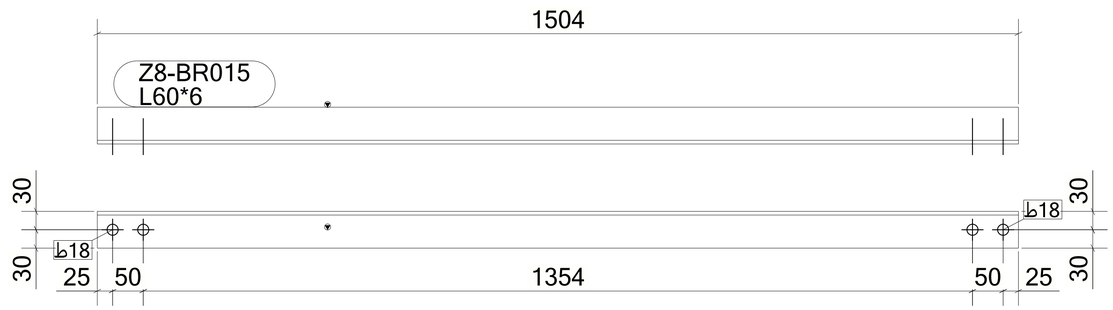

2 *REQUIRED AS DRAWN MARKED* **Z8-BR015**

6 October Monorail
Engineering Unit
Valid For Construction

GENERAL NOTES:

1. THE DIMENSIONS SHOWN ARE NOMINAL (IN MILLIMETERS), U.N.O.
2. WELD SIZESHALL BE AISC MINIMUM OF 6 mm UNLESS NOTED OTHERWISE.
3. ALL FIELD WELDS SHALL BE INSPECTED PER QUALITY ASSURANCE AND SPECIAL INSPECTIONS.

REFERENCE DRAWINGS

1	93M-BOA-NAT-LOT-04833
2	93M-BOA-NAT-LOT-09170
3	93M-BOA-NAT-LOT-01976
4	93M-BOA-NAT-LOT-20021
5	
6	
7	
8	
9	

6TH OF OCTOBER CITY RAIL TRANSIT MONORAIL

The Authority — Hill International Consultant — Main Contractor — Structural Designer

KEY PLAN:

SCALE: AS SHOWN | SHOPDRAWING | DATE: 12/05/2023

REV	DATE	DSG.	CHK.	APP.	AMENDMENTS	STATUS
B	12/05/2023	M.KH	M.KH	DR.M.M	ISSUED FOR INFORMATION	IFI
A	11/20/2022	M.KH	M.KH	DR.M.M	ISSUED FOR INFORMATION	IFI

DRAWING TITLE
6TH OF OCTOBER MONORAIL
SERVICE WALKWAYS
ZONE (1008)
Z8-BR015

Project Code	Rubric	Initiator	Lot	Ref	Number	Revision
93M	047	6ACC	60DEP	DWG	08035	B

Tekla structures

Approval is subject to approval of coordination package between multi-discipline.

REVIEWED WITH COMMENT
MONORAILS PROJECT

MATERIAL LIST FOR ASSEMBLY MK'D **Z8-BR014**

Mark	Profile	GRADE	No.	Length	Area	Weight
Z8-BR014	L60*6	S235JR	1	1304	0.31	7.00
				Total	0.31	7.00

BOLT LIST:-

BOLT \ STUD	BOLT DESCRIPTION	QTY	FINISH
BOLT	B1N2W 16 X 50 A325M	4	

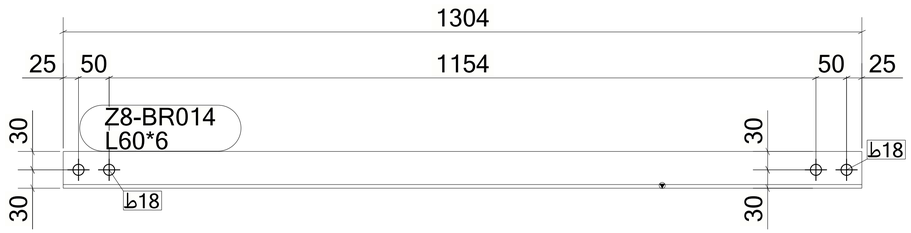

2 *REQUIRED AS DRAWN MARKED* **Z8-BR014**

6 October Monorail
Engineering Unit
Valid For Construction

GENERAL NOTES:

1. THE DIMENSIONS SHOWN ARE NOMINAL (IN MILLIMETERS), U.N.O.
2. WELD SIZESHALL BE AISC MINIMUM OF 6 mm UNLESS NOTED OTHERWISE.
3. ALL FIELD WELDS SHALL BE INSPECTED PER QUALITY ASSURANCE AND SPECIAL INSPECTIONS.

REFERENCE DRAWINGS

1	93M-BOA-NAT-LOT-04833
2	93M-BOA-NAT-LOT-09170
3	93M-BOA-NAT-LOT-01976
4	93M-BOA-NAT-LOT-20021
5	
6	
7	
8	
9	

6TH OF OCTOBER CITY RAIL TRANSIT MONORAIL

The Authority | Consultant: Hill International | Main Contractor: ORASCOM CONSTRUCTION, BOMBARDIER | Structural Designer: INNOVA TRANSPORTATION

KEY PLAN:

SCALE: AS SHOWN | SHOPDRAWING | DATE: 12/05/2023

REV	DATE	DSG.	CHK.	APP.	AMENDMENTS	STATUS
B	12/05/2023	M.KH	M.KH	DR.M.M	ISSUED FOR INFORMATION	IFI
A	11/20/2022	M.KH	M.KH	DR.M.M	ISSUED FOR INFORMATION	IFI

DRAWING TITLE
6TH OF OCTOBER MONORAIL
SERVICE WALKWAYS
ZONE (1008)
Z8-BR014

Project Code	Rubric	Initiator	Lot	Ref	Number	Revision
93M0476	ACC60	DEP	DWG	0803	4	B

Tekla structures

Approval is subject to approval of coordination package between multi-discipline.

REVIEWED WITH COMMENT
MONORAILS PROJECT

MATERIAL LIST FOR ASSEMBLY MK'D **Z8-BR013**

Mark	Profile	GRADE	No.	Length	Area	Weight
Z8-BR013	L60*6	S235JR	1	1304	0.31	7.00
				Total	0.31	7.00

BOLT LIST:-

BOLT \ STUD	BOLT DESCRIPTION	QTY	FINISH
BOLT	B1N2W 16 X 50 A325M	4	

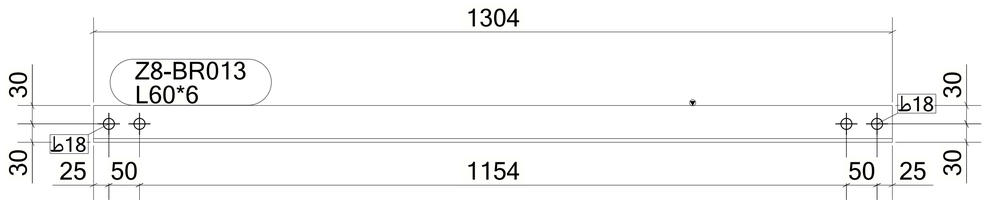

2 *REQUIRED AS DRAWN MARKED* **Z8-BR013**

6 October Monorail
Engineering Unit
Valid For Construction

GENERAL NOTES:

1. THE DIMENSIONS SHOWN ARE NOMINAL (IN MILLIMETERS), U.N.O.
2. WELD SIZESHALL BE AISC MINIMUM OF 6 mm UNLESS NOTED OTHERWISE.
3. ALL FIELD WELDS SHALL BE INSPECTED PER QUALITY ASSURANCE AND SPECIAL INSPECTIONS.

REFERENCE DRAWINGS

1	93M-BOA-NAT-LOT-04833
2	93M-BOA-NAT-LOT-09170
3	93M-BOA-NAT-LOT-01976
4	93M-BOA-NAT-LOT-20021
5	
6	
7	
8	
9	

6TH OF OCTOBER CITY RAIL TRANSIT MONORAIL

The Authority | Consultant: Hill International | Main Contractor: ORASCOM CONSTRUCTION, BOMBARDIER | Structural Designer: INNOVA TRANSPORTATION

KEY PLAN:

SCALE: AS SHOWN | SHOPDRAWING | DATE: 12/05/2023

REV	DATE	DSG.	CHK.	APP.	AMENDMENTS	STATUS
B	12/05/2023	M.KH	M.KH	DR.M.M	ISSUED FOR INFORMATION	IFI
A	11/20/2022	M.KH	M.KH	DR.M.M	ISSUED FOR INFORMATION	IFI

DRAWING TITLE
6TH OF OCTOBER MONORAIL
SERVICE WALKWAYS
ZONE (1008)
Z8-BR013

Project Code	Rubric	Initiator	Lot	Ref	Number	Revision
93M047	6ACC	60DE	P	DWG	0803	B

Tekla structures

Approval is subject to approval of coordination package between multi-discipline.

REVIEWED WITH COMMENT
MONORAILS PROJECT

MATERIAL LIST FOR ASSEMBLY MK'D **Z8-BR012**

Mark	Profile	GRADE	No.	Length	Area	Weight
Z8-BR012	L60*6	S235JR	1	1331	0.32	7.14
				Total	0.32	7.14

BOLT LIST:-

BOLT \ STUD	BOLT DESCRIPTION	QTY	FINISH
BOLT	B1N2W 16 X 50 A325M	4	

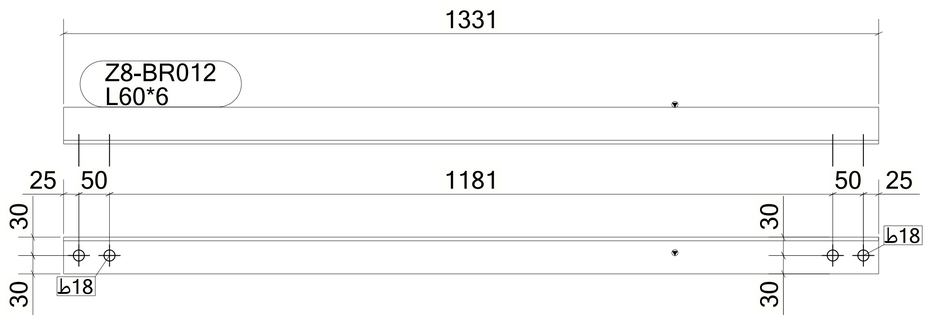

2 *REQUIRED AS DRAWN MARKED* **Z8-BR012**

6 October Monorail
Engineering Unit
Valid For Construction

GENERAL NOTES:

1. THE DIMENSIONS SHOWN ARE NOMINAL (IN MILLIMETERS), U.N.O.
2. WELD SIZESHALL BE AISC MINIMUM OF 6 mm UNLESS NOTED OTHERWISE.
3. ALL FIELD WELDS SHALL BE INSPECTED PER QUALITY ASSURANCE AND SPECIAL INSPECTIONS.

REFERENCE DRAWINGS

1	93M-BOA-NAT-LOT-04833
2	93M-BOA-NAT-LOT-09170
3	93M-BOA-NAT-LOT-01976
4	93M-BOA-NAT-LOT-20021
5	
6	
7	
8	
9	

6TH OF OCTOBER CITY RAIL TRANSIT MONORAIL

The Authority — Hill International Consultant — Main Contractor — Structural Designer

KEY PLAN:

SCALE	SHOPDRAWING	DATE
AS SHOWN		12/05/2023

REV	DATE	DSG.	CHK.	APP.	AMENDMENTS	STATUS
B	12/05/2023	M.KH	M.KH	DR.M.M	ISSUED FOR INFORMATION	IFI
A	11/20/2022	M.KH	M.KH	DR.M.M	ISSUED FOR INFORMATION	IFI

DRAWING TITLE
6TH OF OCTOBER MONORAIL
SERVICE WALKWAYS
ZONE (1008)
Z8-BR012

Project Code	Rubric	Initiator	Lot	Ref	Number	Revision
93M	047	6ACC	60DE	PDWG	0803	2 B

Tekla structures

Approval is subject to approval of coordination package between multi-discipline.

REVIEWED WITH COMMENT
MONORAILS PROJECT

MATERIAL LIST FOR ASSEMBLY MK'D **Z8-BR011**

Mark	Profile	GRADE	No.	Length	Area	Weight
Z8-BR011	L60*6	S235JR	1	1331	0.32	7.15
				Total	0.32	7.15

BOLT LIST:-

BOLT \ STUD	BOLT DESCRIPTION	QTY	FINISH
BOLT	B1N2W 16 X 50 A325M	4	

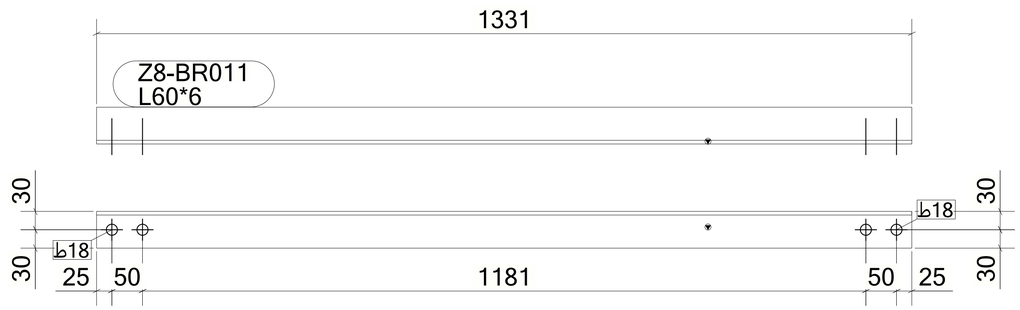

2 *REQUIRED AS DRAWN MARKED* **Z8-BR011**

6 October Monorail
Engineering Unit
Valid For Construction

GENERAL NOTES:

1. THE DIMENSIONS SHOWN ARE NOMINAL (IN MILLIMETERS), U.N.O.
2. WELD SIZESHALL BE AISC MINIMUM OF 6 mm UNLESS NOTED OTHERWISE.
3. ALL FIELD WELDS SHALL BE INSPECTED PER QUALITY ASSURANCE AND SPECIAL INSPECTIONS.

REFERENCE DRAWINGS

1	93M-BOA-NAT-LOT-04833
2	93M-BOA-NAT-LOT-09170
3	93M-BOA-NAT-LOT-01976
4	93M-BOA-NAT-LOT-20021
5	
6	
7	
8	
9	

6TH OF OCTOBER CITY RAIL TRANSIT MONORAIL

The Authority | Hill International Consultant | Main Contractor | Structural Designer

KEY PLAN:

SCALE	SHOPDRAWING	DATE
AS SHOWN		12/05/2023

REV	DATE	DSG.	CHK.	APP.	AMENDMENTS	STATUS
B	12/05/2023	M.KH	M.KH	DR.M.M	ISSUED FOR INFORMATION	IFI
A	11/20/2022	M.KH	M.KH	DR.M.M	ISSUED FOR INFORMATION	IFI

DRAWING TITLE
6TH OF OCTOBER MONORAIL SERVICE WALKWAYS ZONE (1008)
Z8-BR011

Project Code	Rubric	Initiator	Lot	Ref	Number	Revision
93M	047	6ACC	60DE	PDWG	0803	1 B

Tekla structures

Approval is subject to approval of coordination package between multi-discipline.

REVIEWED WITH COMMENT
MONORAILS PROJECT

MATERIAL LIST FOR ASSEMBLY MK'D **Z8-BR010**

Mark	Profile	GRADE	No.	Length	Area	Weight
Z8-BR010	L80*8	S235JR	1	3488	1.12	33.30
				Total	1.12	33.30

BOLT LIST:-

BOLT \ STUD	BOLT DESCRIPTION	QTY	FINISH
BOLT	B1N2W 16 X 50 A325M	4	

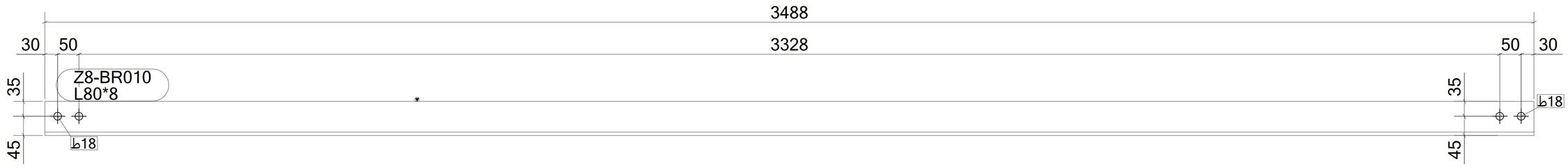

1 *REQUIRED AS DRAWN MARKED* **Z8-BR010**

6 October Monorail
Engineering Unit
Valid For Construction

GENERAL NOTES:

1. THE DIMENSIONS SHOWN ARE NOMINAL (IN MILLIMETERS), U.N.O.
2. WELD SIZESHALL BE AISC MINIMUM OF 6 mm UNLESS NOTED OTHERWISE.
3. ALL FIELD WELDS SHALL BE INSPECTED PER QUALITY ASSURANCE AND SPECIAL INSPECTIONS.

REFERENCE DRAWINGS

1	93M-BOA-NAT-LOT-04833
2	93M-BOA-NAT-LOT-09170
3	93M-BOA-NAT-LOT-01976
4	93M-BOA-NAT-LOT-20021
5	
6	
7	
8	
9	

6TH OF OCTOBER CITY RAIL TRANSIT MONORAIL

The Authority | Hill International Consultant | ORASCOM / BOMBARDIER Main Contractor | INNOVA TRANSPORTATION Structural Designer

KEY PLAN:

SCALE: AS SHOWN | SHOPDRAWING | DATE: 12/05/2023

REV	DATE	DSG.	CHK.	APP.	AMENDMENTS	STATUS
B	12/05/2023	M.KH	M.KH	DR.M.M	ISSUED FOR INFORMATION	IFI
A	11/20/2022	M.KH	M.KH	DR.M.M	ISSUED FOR INFORMATION	IFI

DRAWING TITLE
6TH OF OCTOBER MONORAIL
SERVICE WALKWAYS
ZONE (1008)
Z8-BR010

Project Code	Rubric	Initiator	Lot	Ref	Number	Revision
9 3 M	0 4 7 6	A C C	6 0 D E P	D W G	0 8 0 3 0	B

Tekla structures

Approval is subject to approval of coordination package between multi-discipline.

REVIEWED WITH COMMENT
MONORAILS PROJECT

MATERIAL LIST FOR ASSEMBLY MK'D **Z8-BR009**

Mark	Profile	GRADE	No.	Length	Area	Weight
Z8-BR009	L80*8	S235JR	1	3488	1.12	33.29
				Total	1.12	33.29

BOLT LIST:-

BOLT \ STUD	BOLT DESCRIPTION	QTY	FINISH
BOLT	B1N2W 16 X 50 A325M	4	

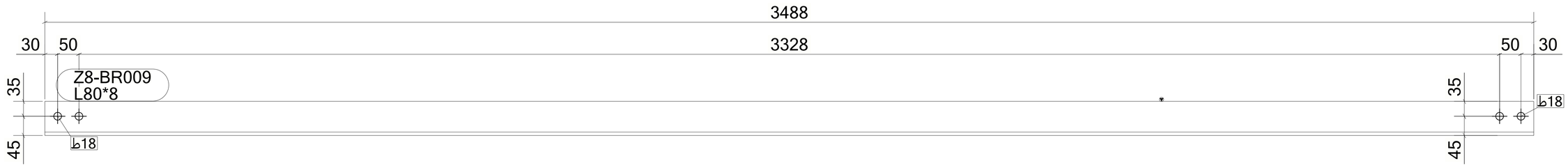

3 *REQUIRED AS DRAWN MARKED* **Z8-BR009**

6 October Monorail
Engineering Unit
Valid For Construction

GENERAL NOTES:

1. THE DIMENSIONS SHOWN ARE NOMINAL (IN MILLIMETERS), U.N.O.
2. WELD SIZESHALL BE AISC MINIMUM OF 6 mm UNLESS NOTED OTHERWISE.
3. ALL FIELD WELDS SHALL BE INSPECTED PER QUALITY ASSURANCE AND SPECIAL INSPECTIONS.

REFERENCE DRAWINGS

1	93M-BOA-NAT-LOT-04833
2	93M-BOA-NAT-LOT-09170
3	93M-BOA-NAT-LOT-01976
4	93M-BOA-NAT-LOT-20021
5	
6	
7	
8	
9	

6TH OF OCTOBER CITY RAIL TRANSIT MONORAIL

The Authority | Consultant: Hill International | Main Contractor: ORASCOM CONSTRUCTION, BOMBARDIER | Structural Designer: INNOVA TRANSPORTATION

KEY PLAN:

SCALE: AS SHOWN | SHOPDRAWING | DATE: 12/05/2023

REV	DATE	DSG.	CHK.	APP.	AMENDMENTS	STATUS
B	12/05/2023	M.KH	M.KH	DR.M.M	ISSUED FOR INFORMATION	IFI
A	11/20/2022	M.KH	M.KH	DR.M.M	ISSUED FOR INFORMATION	IFI

DRAWING TITLE
6TH OF OCTOBER MONORAIL
SERVICE WALKWAYS
ZONE (1008)
Z8-BR009

Project Code	Rubric	Initiator	Lot	Ref	Number	Revision
9 3 M	0 4 7 6	A C C	6 0 D E P	D W G	0 8 0 2 9	B

Tekla structures

Approval is subject to approval of coordination package between multi-discipline.

REVIEWED WITH COMMENT
MONORAILS PROJECT

MATERIAL LIST FOR ASSEMBLY MK'D **Z8-BR008**

Mark	Profile	GRADE	No.	Length	Area	Weight
Z8-BR008	L80*8	S235JR	1	3491	1.12	33.32
				Total	1.12	33.32

BOLT LIST:-

BOLT \ STUD	BOLT DESCRIPTION	QTY	FINISH
BOLT	B1N2W 16 X 50 A325M	4	

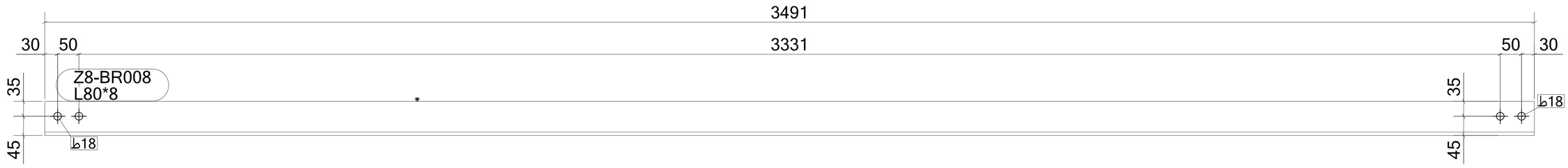

2 *REQUIRED AS DRAWN MARKED* **Z8-BR008**

6 October Monorail
Engineering Unit
Valid For Construction

GENERAL NOTES:

1. THE DIMENSIONS SHOWN ARE NOMINAL (IN MILLIMETERS), U.N.O.
2. WELD SIZESHALL BE AISC MINIMUM OF 6 mm UNLESS NOTED OTHERWISE.
3. ALL FIELD WELDS SHALL BE INSPECTED PER QUALITY ASSURANCE AND SPECIAL INSPECTIONS.

REFERENCE DRAWINGS

1	93M-BOA-NAT-LOT-04833
2	93M-BOA-NAT-LOT-09170
3	93M-BOA-NAT-LOT-01976
4	93M-BOA-NAT-LOT-20021
5	
6	
7	
8	
9	

6TH OF OCTOBER CITY RAIL TRANSIT MONORAIL

The Authority | Hill International Consultant | ORASCOM CONSTRUCTION / BOMBARDIER Main Contractor | INNOVA TRANSPORTATION Structural Designer

KEY PLAN:

SCALE: AS SHOWN | SHOPDRAWING | DATE: 12/05/2023

REV	DATE	DSG.	CHK.	APP.	AMENDMENTS	STATUS
B	12/05/2023	M.KH	M.KH	DR.M.M	ISSUED FOR INFORMATION	IFI
A	11/20/2022	M.KH	M.KH	DR.M.M	ISSUED FOR INFORMATION	IFI

DRAWING TITLE
6TH OF OCTOBER MONORAIL
SERVICE WALKWAYS
ZONE (1008)
Z8-BR008

Project Code	Rubric	Initiator	Lot	Ref	Number	Revision
9 3 M 0 4 7 6	A C C	6 0 D E P	D W G	0 8 0 2 8		B

Tekla structures

Approval is subject to approval of coordination package between multi-discipline.

REVIEWED WITH COMMENT
MONORAILS PROJECT

MATERIAL LIST FOR ASSEMBLY MK'D **Z8-BR007**

Mark	Profile	GRADE	No.	Length	Area	Weight
Z8-BR007	L80*8	S235JR	1	3084	0.99	29.44
				Total	0.99	29.44

BOLT LIST:-

BOLT \ STUD	BOLT DESCRIPTION	QTY	FINISH
BOLT	B1N2W 16 X 50 A325M	4	

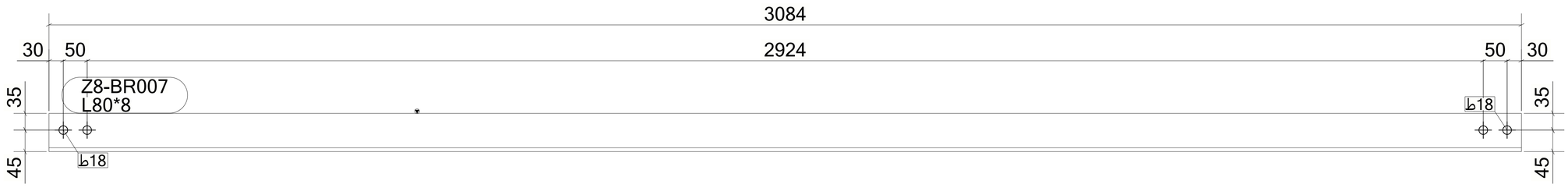

1 *REQUIRED AS DRAWN MARKED* **Z8-BR007**

6 October Monorail
Engineering Unit
Valid For Construction

GENERAL NOTES:

1. THE DIMENSIONS SHOWN ARE NOMINAL (IN MILLIMETERS), U.N.O.
2. WELD SIZESHALL BE AISC MINIMUM OF 6 mm UNLESS NOTED OTHERWISE.
3. ALL FIELD WELDS SHALL BE INSPECTED PER QUALITY ASSURANCE AND SPECIAL INSPECTIONS.

REFERENCE DRAWINGS

1	93M-BOA-NAT-LOT-04833
2	93M-BOA-NAT-LOT-09170
3	93M-BOA-NAT-LOT-01976
4	93M-BOA-NAT-LOT-20021
5	
6	
7	
8	
9	

6TH OF OCTOBER CITY RAIL TRANSIT MONORAIL

The Authority | Hill International Consultant | ORASCOM / BOMBARDIER Main Contractor | INNOVA TRANSPORTATION Structural Designer

KEY PLAN:

SCALE: AS SHOWN | SHOPDRAWING | DATE: 12/05/2023

REV	DATE	DSG.	CHK.	APP.	AMENDMENTS	STATUS
B	12/05/2023	M.KH	M.KH	DR.M.M	ISSUED FOR INFORMATION	IFI
A	11/20/2022	M.KH	M.KH	DR.M.M	ISSUED FOR INFORMATION	IFI

DRAWING TITLE
6TH OF OCTOBER MONORAIL
SERVICE WALKWAYS
ZONE (1008)
Z8-BR007

Project Code	Rubric	Initiator	Lot	Ref	Number	Revision
93M	047	6ACC	60DE	PDWG	0802	7 B

Tekla structures

Approval is subject to approval of coordination package between multi-discipline.

REVIEWED WITH COMMENT
MONORAILS PROJECT

MATERIAL LIST FOR ASSEMBLY MK'D **Z8-BR006**

Mark	Profile	GRADE	No.	Length	Area	Weight
Z8-BR006	L80*8	S235JR	1	3085	0.99	29.44
				Total	0.99	29.44

BOLT LIST:-

BOLT \ STUD	BOLT DESCRIPTION	QTY	FINISH
BOLT	B1N2W 16 X 50 A325M	4	

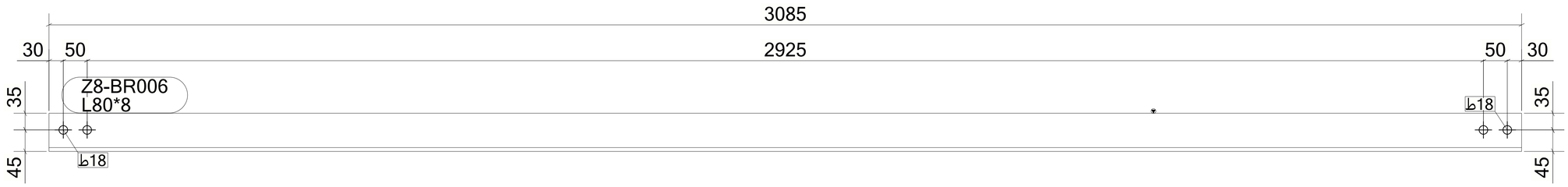

1 *REQUIRED AS DRAWN MARKED* **Z8-BR006**

6 October Monorail
Engineering Unit
Valid For Construction

GENERAL NOTES:

1. THE DIMENSIONS SHOWN ARE NOMINAL (IN MILLIMETERS), U.N.O.
2. WELD SIZESHALL BE AISC MINIMUM OF 6 mm UNLESS NOTED OTHERWISE.
3. ALL FIELD WELDS SHALL BE INSPECTED PER QUALITY ASSURANCE AND SPECIAL INSPECTIONS.

REFERENCE DRAWINGS

1	93M-BOA-NAT-LOT-04833
2	93M-BOA-NAT-LOT-09170
3	93M-BOA-NAT-LOT-01976
4	93M-BOA-NAT-LOT-20021
5	
6	
7	
8	
9	

6TH OF OCTOBER CITY RAIL TRANSIT MONORAIL

The Authority | Hill International Consultant | Main Contractor | Structural Designer

KEY PLAN:

SCALE: AS SHOWN | SHOPDRAWING | DATE: 12/05/2023

REV	DATE	DSG.	CHK.	APP.	AMENDMENTS	STATUS
B	12/05/2023	M.KH	M.KH	DR.M.M	ISSUED FOR INFORMATION	IFI
A	11/20/2022	M.KH	M.KH	DR.M.M	ISSUED FOR INFORMATION	IFI

DRAWING TITLE
6TH OF OCTOBER MONORAIL
SERVICE WALKWAYS
ZONE (1008)
Z8-BR006

Project Code	Rubric	Initiator	Lot	Ref	Number	Revision
93M	047	6ACC	60DE	PDWG	08026	B

Tekla structures

Approval is subject to approval of coordination package between multi-discipline.

REVIEWED WITH COMMENT
MONORAILS PROJECT

MATERIAL LIST FOR ASSEMBLY MK'D **Z8-BR005**

Mark	Profile	GRADE	No.	Length	Area	Weight
Z8-BR005	L80*8	S235JR	1	3390	1.09	32.36
				Total	1.09	32.36

BOLT LIST:-

BOLT \ STUD	BOLT DESCRIPTION	QTY	FINISH
BOLT	B1N2W 16 X 50 A325M	4	

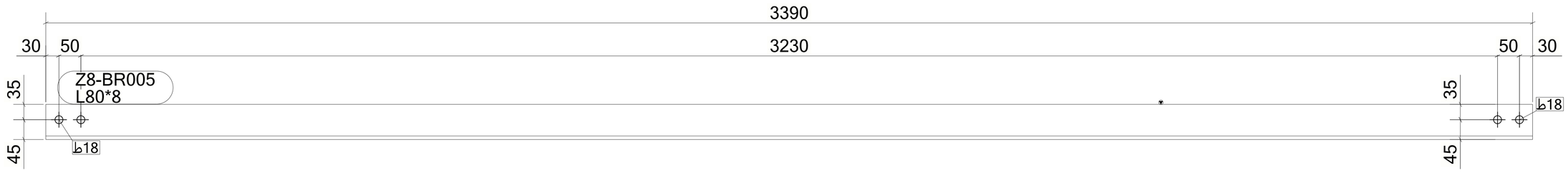

1 *REQUIRED AS DRAWN MARKED* **Z8-BR005**

6 October Monorail
Engineering Unit
Valid For Construction

GENERAL NOTES:

1. THE DIMENSIONS SHOWN ARE NOMINAL (IN MILLIMETERS), U.N.O.
2. WELD SIZESHALL BE AISC MINIMUM OF 6 mm UNLESS NOTED OTHERWISE.
3. ALL FIELD WELDS SHALL BE INSPECTED PER QUALITY ASSURANCE AND SPECIAL INSPECTIONS.

REFERENCE DRAWINGS

1	93M-BOA-NAT-LOT-04833
2	93M-BOA-NAT-LOT-09170
3	93M-BOA-NAT-LOT-01976
4	93M-BOA-NAT-LOT-20021
5	
6	
7	
8	
9	

6TH OF OCTOBER CITY RAIL TRANSIT MONORAIL

The Authority | Consultant: Hill International | Main Contractor: ORASCOM CONSTRUCTION, BOMBARDIER | Structural Designer: INNOVA TRANSPORTATION

KEY PLAN:

SCALE: AS SHOWN | SHOPDRAWING | DATE: 12/05/2023

REV	DATE	DSG.	CHK.	APP.	AMENDMENTS	STATUS
B	12/05/2023	M.KH	M.KH	DR.M.M	ISSUED FOR INFORMATION	IFI
A	11/20/2022	M.KH	M.KH	DR.M.M	ISSUED FOR INFORMATION	IFI

DRAWING TITLE
6TH OF OCTOBER MONORAIL
SERVICE WALKWAYS
ZONE (1008)
Z8-BR005

Project Code	Rubric	Initiator	Lot	Ref	Number	Revision
9 3 M 0 4 7 6	A C C	6 0 D E P	D W G	0 8 0 2 5		B

Tekla structures

Approval is subject to approval of coordination package between multi-discipline.

REVIEWED WITH COMMENT
MONORAILS PROJECT

MATERIAL LIST FOR ASSEMBLY MK'D **Z8-BR004**

Mark	Profile	GRADE	No.	Length	Area	Weight
Z8-BR004	L80*8	S235JR	1	3371	1.08	32.18
				Total	1.08	32.18

BOLT LIST:-

BOLT \ STUD	BOLT DESCRIPTION	QTY	FINISH
BOLT	B1N2W 16 X 50 A325M	4	

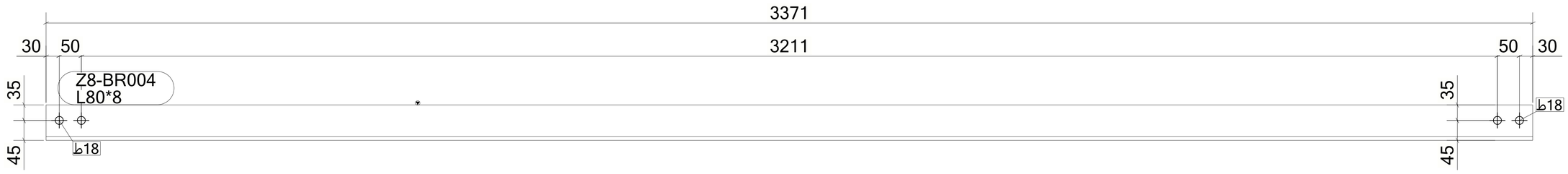

1 *REQUIRED AS DRAWN MARKED* **Z8-BR004**

6 October Monorail
Engineering Unit
Valid For Construction

GENERAL NOTES:

1. THE DIMENSIONS SHOWN ARE NOMINAL (IN MILLIMETERS), U.N.O.
2. WELD SIZESHALL BE AISC MINIMUM OF 6 mm UNLESS NOTED OTHERWISE.
3. ALL FIELD WELDS SHALL BE INSPECTED PER QUALITY ASSURANCE AND SPECIAL INSPECTIONS.

REFERENCE DRAWINGS

1	93M-BOA-NAT-LOT-04833
2	93M-BOA-NAT-LOT-09170
3	93M-BOA-NAT-LOT-01976
4	93M-BOA-NAT-LOT-20021
5	
6	
7	
8	
9	

6TH OF OCTOBER CITY RAIL TRANSIT MONORAIL

The Authority | Consultant: Hill International | Main Contractor: ORASCOM CONSTRUCTION, BOMBARDIER | Structural Designer: INNOVA TRANSPORTATION

KEY PLAN:

SCALE: AS SHOWN | SHOPDRAWING | DATE: 12/05/2023

REV	DATE	DSG.	CHK.	APP.	AMENDMENTS	STATUS
B	12/05/2023	M.KH	M.KH	DR.M.M	ISSUED FOR INFORMATION	IFI
A	11/20/2022	M.KH	M.KH	DR.M.M	ISSUED FOR INFORMATION	IFI

DRAWING TITLE
6TH OF OCTOBER MONORAIL
SERVICE WALKWAYS
ZONE (1008)
Z8-BR004

Project Code	Rubric	Initiator	Lot	Ref	Number	Revision
9 3 M 0 4 7 6	A C C	6 0 D E P	D W G	0 8 0 2 4		B

Tekla structures

Approval is subject to approval of coordination package between multi-discipline.

REVIEWED WITH COMMENT
MONORAILS PROJECT

MATERIAL LIST FOR ASSEMBLY MK'D **Z8-BR003**

Mark	Profile	GRADE	No.	Length	Area	Weight
Z8-BR003	L80*8	S235JR	1	3418	1.10	32.63
				Total	1.10	32.63

BOLT LIST:-

BOLT \ STUD	BOLT DESCRIPTION	QTY	FINISH
BOLT	B1N2W 16 X 50 A325M	4	

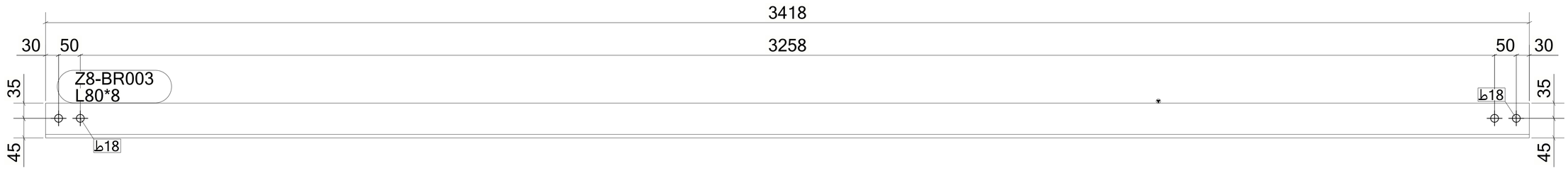

1 *REQUIRED AS DRAWN MARKED* **Z8-BR003**

6 October Monorail
Engineering Unit
Valid For Construction

GENERAL NOTES:

1. THE DIMENSIONS SHOWN ARE NOMINAL (IN MILLIMETERS), U.N.O.
2. WELD SIZESHALL BE AISC MINIMUM OF 6 mm UNLESS NOTED OTHERWISE.
3. ALL FIELD WELDS SHALL BE INSPECTED PER QUALITY ASSURANCE AND SPECIAL INSPECTIONS.

REFERENCE DRAWINGS

1	93M-BOA-NAT-LOT-04833
2	93M-BOA-NAT-LOT-09170
3	93M-BOA-NAT-LOT-01976
4	93M-BOA-NAT-LOT-20021
5	
6	
7	
8	
9	

6TH OF OCTOBER CITY RAIL TRANSIT MONORAIL

The Authority — Hill International Consultant — Main Contractor — Structural Designer

KEY PLAN:

SCALE: AS SHOWN | SHOPDRAWING | DATE: 12/05/2023

REV	DATE	DSG.	CHK.	APP.	AMENDMENTS	STATUS
B	12/05/2023	M.KH	M.KH	DR.M.M	ISSUED FOR INFORMATION	IFI
A	11/20/2022	M.KH	M.KH	DR.M.M	ISSUED FOR INFORMATION	IFI

DRAWING TITLE
6TH OF OCTOBER MONORAIL
SERVICE WALKWAYS
ZONE (1008)
Z8-BR003

Project Code	Rubric	Initiator	Lot	Ref	Number	Revision
93M	047	6ACC	60DE	PDWG	0802	3 B

Tekla structures

Approval is subject to approval of coordination package between multi-discipline.

REVIEWED WITH COMMENT
MONORAILS PROJECT

MATERIAL LIST FOR ASSEMBLY MK'D **Z8-BR002**

Mark	Profile	GRADE	No.	Length	Area	Weight
Z8-BR002	L80*8	S235JR	1	3422	1.10	32.67
				Total	1.10	32.67

BOLT LIST:-

BOLT \ STUD	BOLT DESCRIPTION	QTY	FINISH
BOLT	B1N2W 16 X 50 A325M	4	

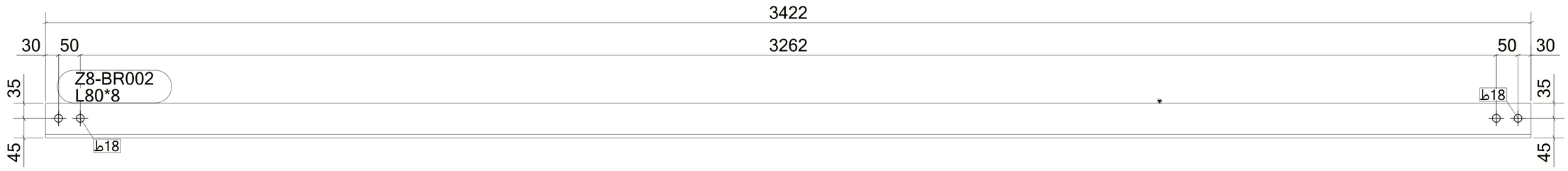

1 *REQUIRED AS DRAWN MARKED* **Z8-BR002**

6 October Monorail
Engineering Unit
Valid For Construction

GENERAL NOTES:

1. THE DIMENSIONS SHOWN ARE NOMINAL (IN MILLIMETERS), U.N.O.
2. WELD SIZESHALL BE AISC MINIMUM OF 6 mm UNLESS NOTED OTHERWISE.
3. ALL FIELD WELDS SHALL BE INSPECTED PER QUALITY ASSURANCE AND SPECIAL INSPECTIONS.

REFERENCE DRAWINGS

1	93M-BOA-NAT-LOT-04833
2	93M-BOA-NAT-LOT-09170
3	93M-BOA-NAT-LOT-01976
4	93M-BOA-NAT-LOT-20021
5	
6	
7	
8	
9	

6TH OF OCTOBER CITY RAIL TRANSIT MONORAIL

The Authority | Consultant: Hill International | Main Contractor: ORASCOM CONSTRUCTION, BOMBARDIER | Structural Designer: INNOVA TRANSPORTATION

KEY PLAN:

SCALE: AS SHOWN | SHOPDRAWING | DATE: 12/05/2023

REV	DATE	DSG.	CHK.	APP.	AMENDMENTS	STATUS
B	12/05/2023	M.KH	M.KH	DR.M.M	ISSUED FOR INFORMATION	IFI
A	11/20/2022	M.KH	M.KH	DR.M.M	ISSUED FOR INFORMATION	IFI

DRAWING TITLE
6TH OF OCTOBER MONORAIL
SERVICE WALKWAYS
ZONE (1008)
Z8-BR002

Project Code	Rubric	Initiator	Lot	Ref	Number	Revision
93M0476	ACC60DEP	DWG	0802		2	B

Tekla structures

Approval is subject to approval of coordination package between multi-discipline.

REVIEWED WITH COMMENT
MONORAILS PROJECT

MATERIAL LIST FOR ASSEMBLY MK'D **Z8-BR001**

Mark	Profile	GRADE	No.	Length	Area	Weight
Z8-BR001	L80*8	S235JR	1	3422	1.10	32.67
				Total	1.10	32.67

BOLT LIST:-

BOLT \ STUD	BOLT DESCRIPTION	QTY	FINISH
BOLT	B1N2W 16 X 50 A325M	4	

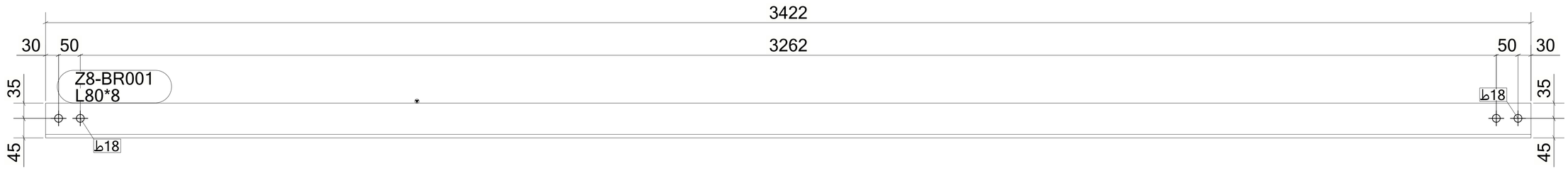

1 *REQUIRED AS DRAWN MARKED* **Z8-BR001**

6 October Monorail
Engineering Unit
Valid For Construction

GENERAL NOTES:

1. THE DIMENSIONS SHOWN ARE NOMINAL (IN MILLIMETERS), U.N.O.
2. WELD SIZESHALL BE AISC MINIMUM OF 6 mm UNLESS NOTED OTHERWISE.
3. ALL FIELD WELDS SHALL BE INSPECTED PER QUALITY ASSURANCE AND SPECIAL INSPECTIONS.

REFERENCE DRAWINGS

1	93M-BOA-NAT-LOT-04833
2	93M-BOA-NAT-LOT-09170
3	93M-BOA-NAT-LOT-01976
4	93M-BOA-NAT-LOT-20021
5	
6	
7	
8	
9	

6TH OF OCTOBER CITY RAIL TRANSIT MONORAIL

The Authority | Hill International Consultant | ORASCOM BOMBARDIER Main Contractor | INNOVA TRANSPORTATION Structural Designer

KEY PLAN:

SCALE: AS SHOWN | SHOPDRAWING | DATE: 12/05/2023

REV	DATE	DSG.	CHK.	APP.	AMENDMENTS	STATUS
B	12/05/2023	M.KH	M.KH	DR.M.M	ISSUED FOR INFORMATION	IFI
A	11/20/2022	M.KH	M.KH	DR.M.M	ISSUED FOR INFORMATION	IFI

DRAWING TITLE
6TH OF OCTOBER MONORAIL
SERVICE WALKWAYS
ZONE (1008)
Z8-BR001

Project Code	Rubric	Initiator	Lot	Ref	Number	Revision
9 3 M	0 4 7 6	A C C	6 0 D E P	D W G	0 8 0 2 1	B

Tekla structures

Same comments as
93M-0476-ACC-60DEP-DWG-08018-B.

REVIEWED WITH COMMENT
MONORAILS PROJECT

MATERIAL LIST FOR ASSEMBLY MK'D **Z8-B009**

Mark	Profile	GRADE	No.	Length	Area	Weight
Z8-B009	L100*10	S235JR	1	2804	1.13	41.83
				Total	1.13	41.83

BOLT LIST:-

BOLT \ STUD	BOLT DESCRIPTION	QTY	FINISH
BOLT	B1N2W 16 X 50 A325M	4	

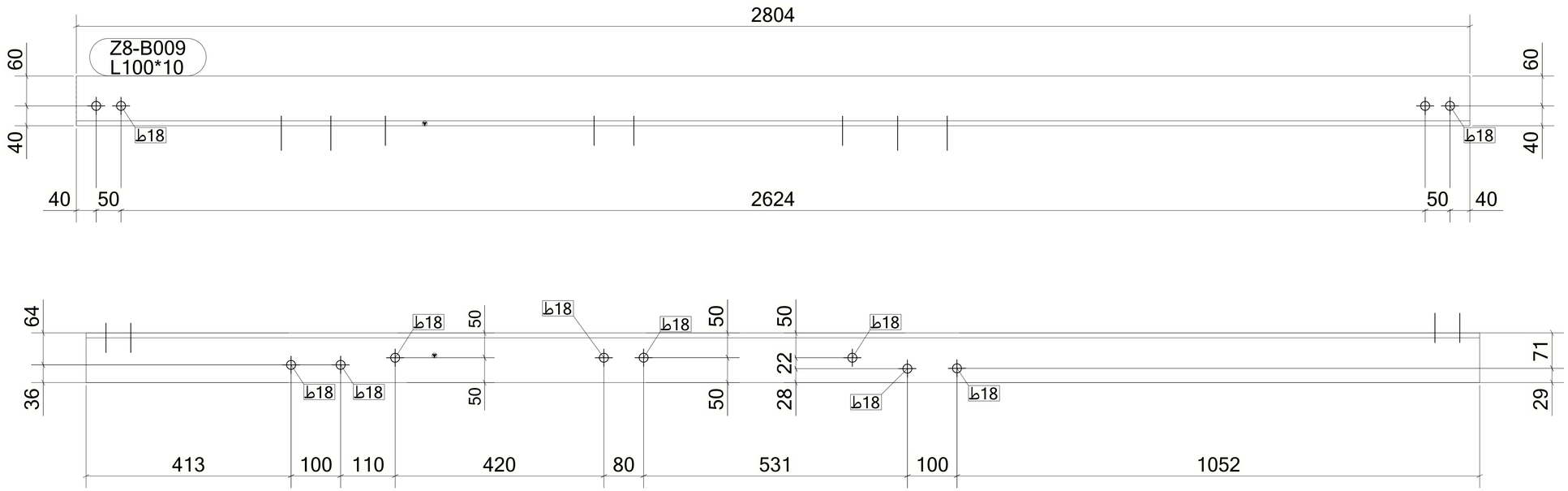

1 *REQUIRED AS DRAWN MARKED* **Z8-B009**

6 October Monorail
Engineering Unit
Valid For Construction

GENERAL NOTES:

1. THE DIMENSIONS SHOWN ARE NOMINAL (IN MILLIMETERS), U.N.O.
2. WELD SIZESHALL BE AISC MINIMUM OF 6 mm UNLESS NOTED OTHERWISE.
3. ALL FIELD WELDS SHALL BE INSPECTED PER QUALITY ASSURANCE AND SPECIAL INSPECTIONS.

REFERENCE DRAWINGS

1	93M-BOA-NAT-LOT-04833
2	93M-BOA-NAT-LOT-09170
3	93M-BOA-NAT-LOT-01976
4	93M-BOA-NAT-LOT-20021
5	
6	
7	
8	
9	

6TH OF OCTOBER CITY RAIL TRANSIT MONORAIL

The Authority | Consultant: Hill International | Main Contractor: ORASCOM CONSTRUCTION / BOMBARDIER | Structural Designer: INNOVA TRANSPORTATION

KEY PLAN:

SCALE	SHOPDRAWING	DATE
AS SHOWN		12/05/2023

REV	DATE	DSG.	CHK.	APP.	AMENDMENTS	STATUS
B	12/05/2023	M.KH	M.KH	DR.M.M	ISSUED FOR INFORMATION	IFI
A	11/20/2022	M.KH	M.KH	DR.M.M	ISSUED FOR INFORMATION	IFI

DRAWING TITLE
6TH OF OCTOBER MONORAIL
SERVICE WALKWAYS
ZONE (1008)
Z8-B009

Project Code	Rubric	Initiator	Lot	Ref	Number	Revision
93M	047	6ACC	60DEP	DWG	08020	B

Tekla structures

Same comments as
93M-0476-ACC-60DEP-DWG-08018-B.

REVIEWED WITH COMMENT
MONORAILS PROJECT

MATERIAL LIST FOR ASSEMBLY MK'D **Z8-B008**

Mark	Profile	GRADE	No.	Length	Area	Weight
Z8-B008	L100*10	S235JR	1	2803	1.12	41.80
				Total	1.12	41.80

BOLT LIST:-

BOLT \ STUD	BOLT DESCRIPTION	QTY	FINISH
BOLT	B1N2W 16 X 50 A325M	4	

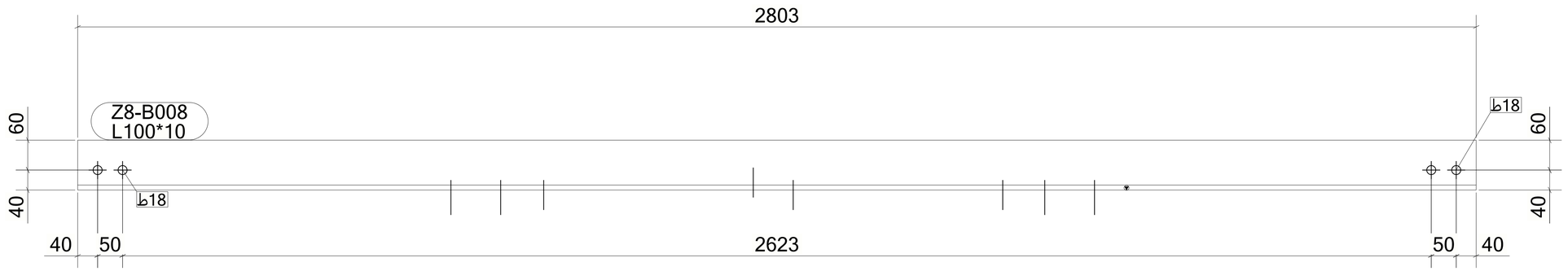

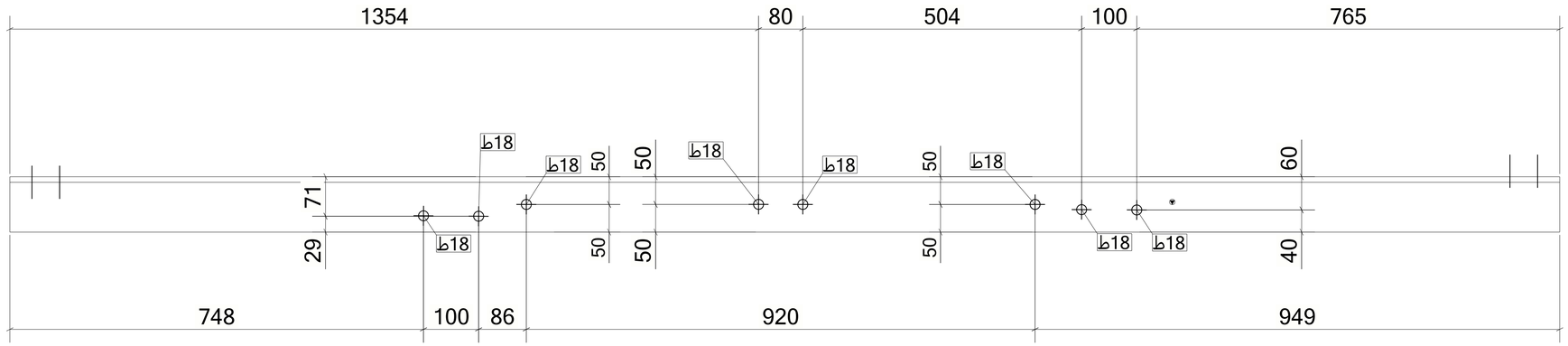

1 *REQUIRED AS DRAWN MARKED* **Z8-B008**

6 October Monorail
Engineering Unit
Valid For Construction

GENERAL NOTES:

1. THE DIMENSIONS SHOWN ARE NOMINAL (IN MILLIMETERS), U.N.O.
2. WELD SIZESHALL BE AISC MINIMUM OF 6 mm UNLESS NOTED OTHERWISE.
3. ALL FIELD WELDS SHALL BE INSPECTED PER QUALITY ASSURANCE AND SPECIAL INSPECTIONS.

REFERENCE DRAWINGS

1	93M-BOA-NAT-LOT-04833
2	93M-BOA-NAT-LOT-09170
3	93M-BOA-NAT-LOT-01976
4	93M-BOA-NAT-LOT-20021
5	
6	
7	
8	
9	

6TH OF OCTOBER CITY RAIL TRANSIT MONORAIL

The Authority | Consultant: Hill International | Main Contractor: ORASCOM CONSTRUCTION, BOMBARDIER | Structural Designer: INNOVA TRANSPORTATION

KEY PLAN:

SCALE: AS SHOWN | SHOPDRAWING | DATE: 12/05/2023

REV	DATE	DSG.	CHK.	APP.	AMENDMENTS	STATUS
B	12/05/2023	M.KH	M.KH	DR.M.M	ISSUED FOR INFORMATION	IFI
A	11/20/2022	M.KH	M.KH	DR.M.M	ISSUED FOR INFORMATION	IFI

DRAWING TITLE
6TH OF OCTOBER MONORAIL
SERVICE WALKWAYS
ZONE (1008)
Z8-B008

Project Code	Rubric	Initiator	Lot	Ref	Number	Revision
93M0476	ACC	60	DEP	DWG	08019	B

Tekla structures

1-Check that the end plate bolted to the beam should be completely rested on the beam.

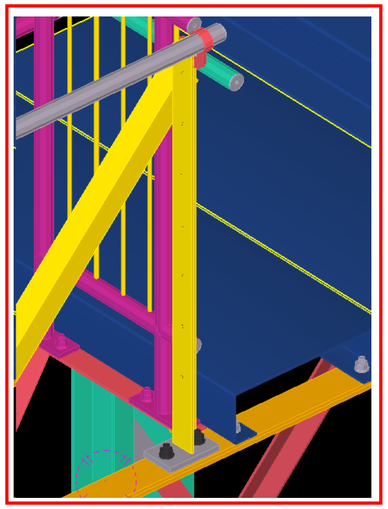

Snap taken from the IFC model for L100*10

MATERIAL LIST FOR ASSEMBLY MK'D **Z8-B007**						
Mark	Profile	GRADE	No.	Length	Area	Weight
Z8-B007	L100*10	S235JR	1	2808	1.13	41.88
W793	PL10*80	S355JR	2	150	0.03	0.94
				Total	1.18	43.76

BOLT LIST:-

BOLT \ STUD	BOLT DESCRIPTION	QTY	FINISH
BOLT	B1N2W 16 X 50 A325M	4	

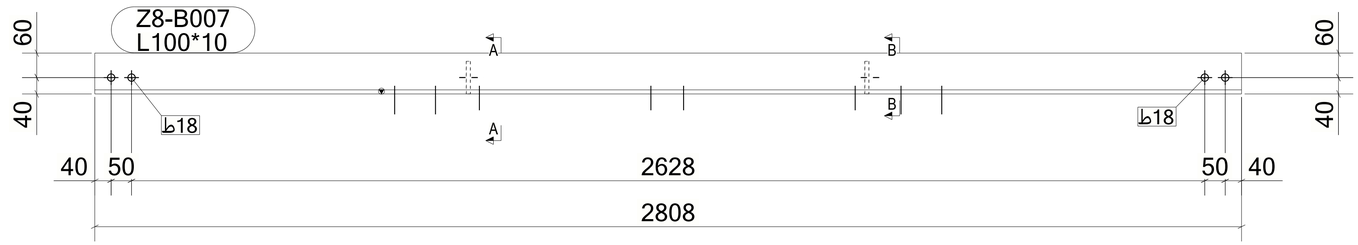

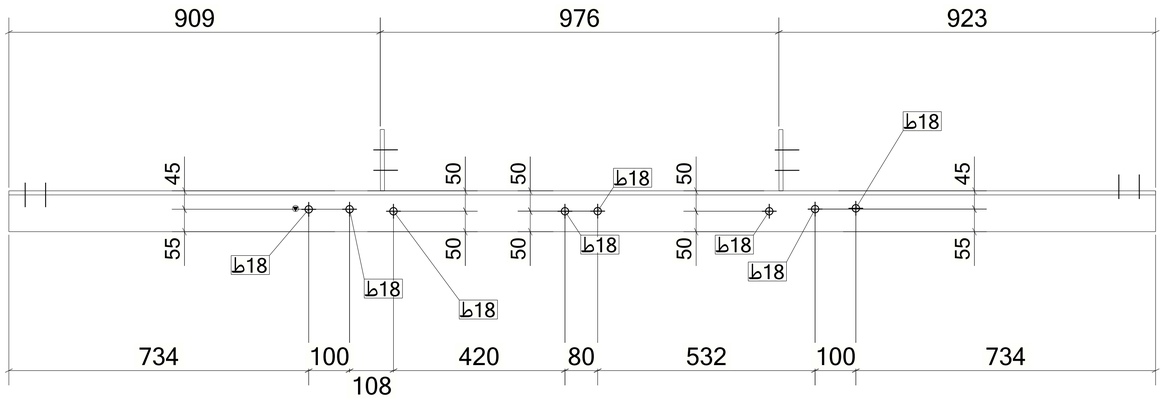

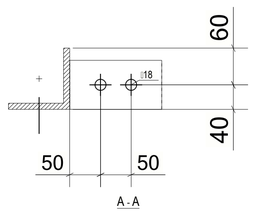

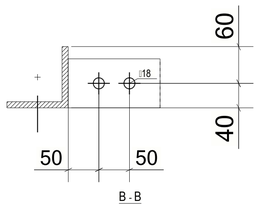

1 *REQUIRED AS DRAWN MARKED* **Z8-B007**

6 October Monorail
Engineering Unit
Valid For Construction

GENERAL NOTES:

1. THE DIMENSIONS SHOWN ARE NOMINAL (IN MILLIMETERS), U.N.O.
2. WELD SIZESHALL BE AISC MINIMUM OF 6 mm UNLESS NOTED OTHERWISE.
3. ALL FIELD WELDS SHALL BE INSPECTED PER QUALITY ASSURANCE AND SPECIAL INSPECTIONS.

REFERENCE DRAWINGS

1	93M-BOA-NAT-LOT-04833
2	93M-BOA-NAT-LOT-09170
3	93M-BOA-NAT-LOT-01976
4	93M-BOA-NAT-LOT-20021
5	
6	
7	
8	
9	

6TH OF OCTOBER CITY RAIL TRANSIT MONORAIL

The Authority — Hill International (Consultant) — Main Contractor — Structural Designer

KEY PLAN:

SCALE	SHOPDRAWING	DATE
AS SHOWN		12/05/2023

REV	DATE	DSG.	CHK.	APP.	AMENDMENTS	STATUS
B	12/05/2023	M.KH	M.KH	DR.M.M	ISSUED FOR INFORMATION	IFI
A	11/20/2022	M.KH	M.KH	DR.M.M	ISSUED FOR INFORMATION	IFI

DRAWING TITLE
6TH OF OCTOBER MONORAIL
SERVICE WALKWAYS
ZONE (1008)
Z8-B007

Project Code	Rubric	Initiator	Lot	Ref	Number	Revision
93M	047	ACC	60	DEP	DWG	0801	8	B

Tekla structures

Same comments as
93M-0476-ACC-6ODEP-DWG-08012-B

REVIEWED WITH COMMENT
MONORAILS PROJECT

MATERIAL LIST FOR ASSEMBLY MK'D **Z8-B006**

Mark	Profile	GRADE	No.	Length	Area	Weight
Z8-B006	IPE270	S355JR	1	3302	3.44	118.98
W361	PL8*107.9	S355JR	3	250	0.05	1.42
				Total	3.59	123.23

BOLT LIST:-

BOLT \ STUD	BOLT DESCRIPTION		QTY	FINISH
BOLT	B1N2W 16 X 50	A325M	6	
BOLT	B1N2W 20 X 50	A325M	6	

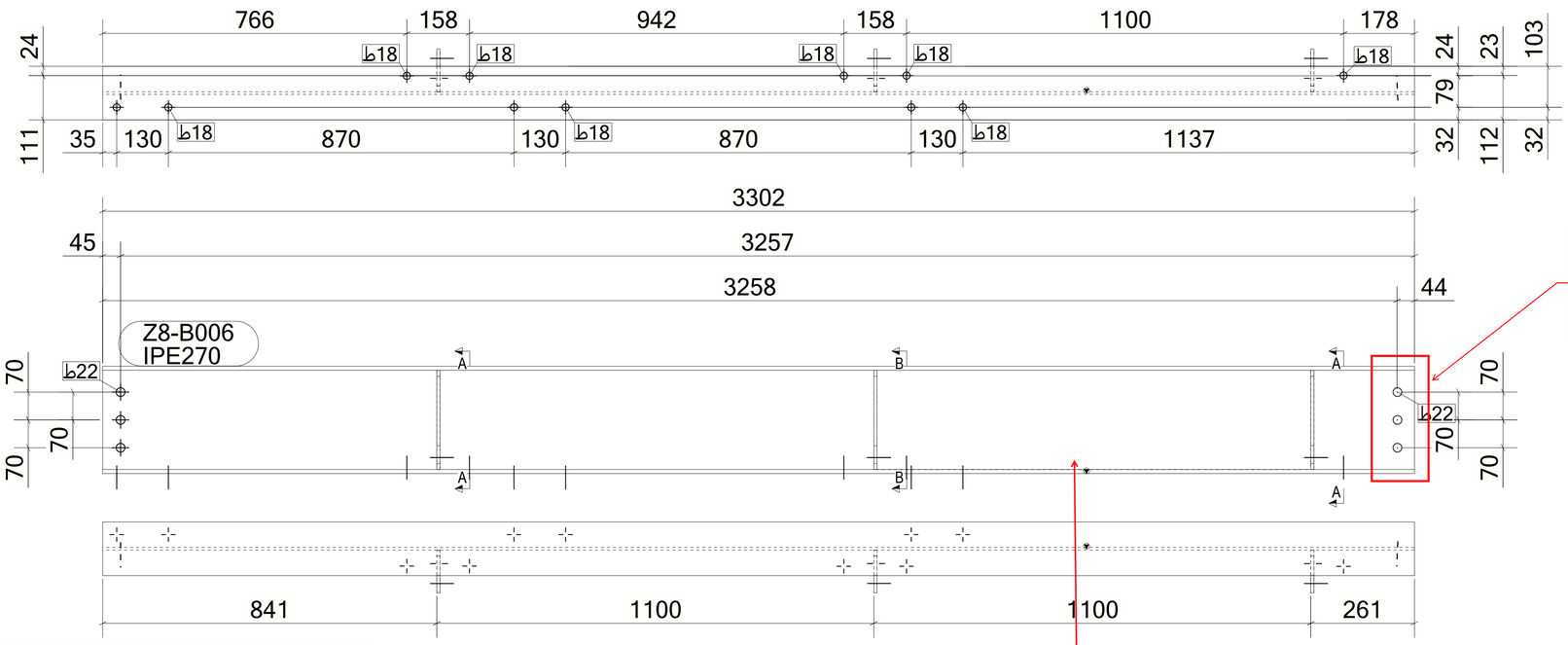

Please check bolt parts

-Please check the orientation of the beam.

1 *REQUIRED AS DRAWN MARKED* **Z8-B006**

6 October: Monorail
Engineering Unit
Valid For Construction

GENERAL NOTES:

1. THE DIMENSIONS SHOWN ARE NOMINAL (IN MILLIMETERS), U.N.O.
2. WELD SIZESHALL BE AISC MINIMUM OF 6 mm UNLESS NOTED OTHERWISE.
3. ALL FIELD WELDS SHALL BE INSPECTED PER QUALITY ASSURANCE AND SPECIAL INSPECTIONS.

REFERENCE DRAWINGS

1	93M-BOA-NAT-LOT-04833
2	93M-BOA-NAT-LOT-09170
3	93M-BOA-NAT-LOT-01976
4	93M-BOA-NAT-LOT-20021
5	
6	
7	
8	
9	

6TH OF OCTOBER CITY RAIL TRANSIT MONORAIL

The Authority — Consultant — Main Contractor — Structural Designer

KEY PLAN:

SCALE: AS SHOWN | SHOPDRAWING | DATE

REV	DATE	DSG.	CHK.	APP.	AMENDMENTS	STATUS

DRAWING TITLE
6TH OF OCTOBER MONORAIL
SERVICE WALKWAYS
ZONE
Z8-B006

Project Code	Rubric	Initiator	Lot	Ref	Number	Revision
93M047	6ACC	60DEP	DWG	08017		B

Tekla structures

Same comments as
93M-0476-ACC-6ODEP-DWG-08012-B

REVIEWED WITH COMMENT
MONORAILS PROJECT

MATERIAL LIST FOR ASSEMBLY MK'D **Z8-B005**

Mark	Profile	GRADE	No.	Length	Area	Weight
Z8-B005	IPE270	S355JR	1	3257	3.39	117.34
W361	PL8*107.9	S355JR	3	250	0.05	1.42
				Total	3.54	121.59

BOLT LIST:-

BOLT \ STUD	BOLT DESCRIPTION		QTY	FINISH
BOLT	B1N2W 16 X 50	A325M	6	
BOLT	B1N2W 20 X 50	A325M	3	
BOLT	B1N2W 20 X 60	A325M	3	

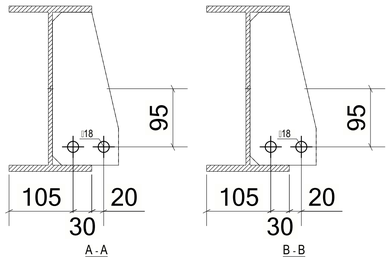

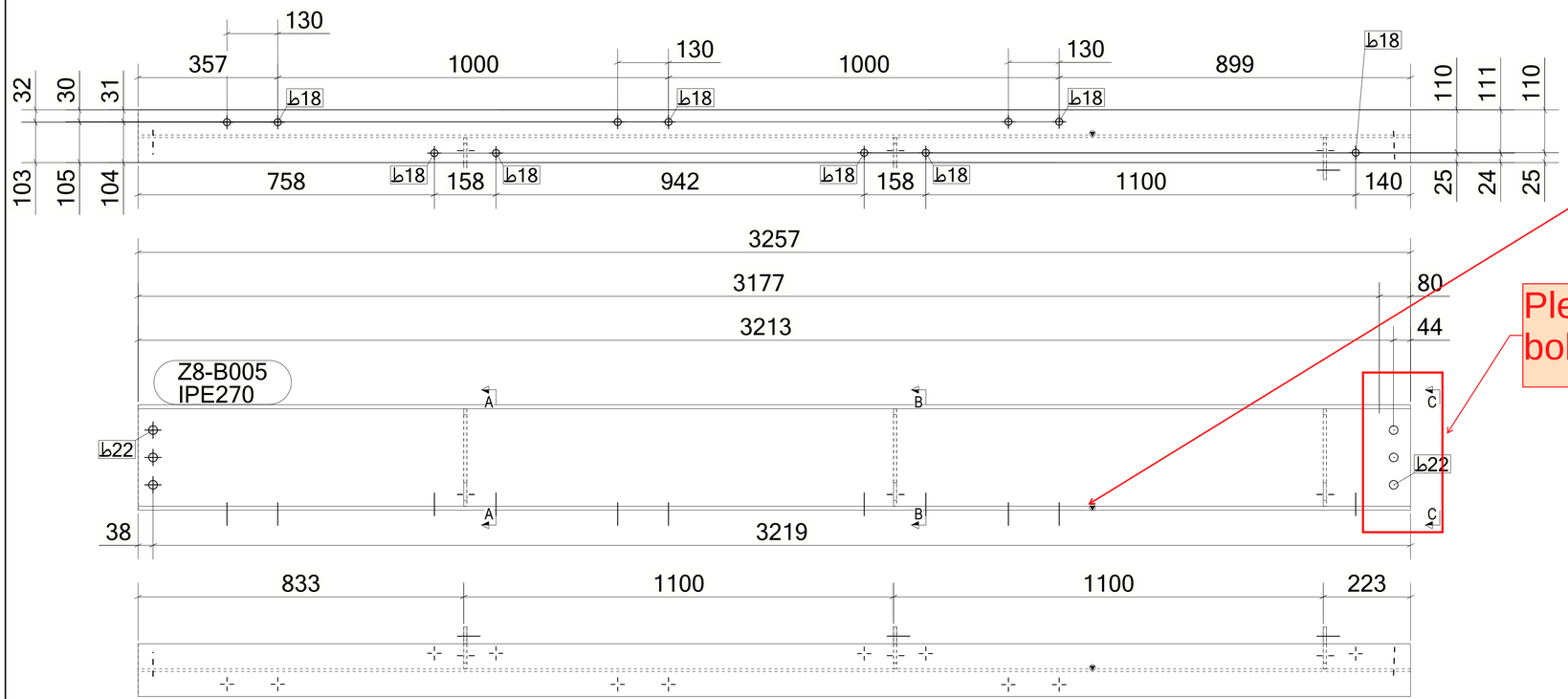

-Please check the orientation of the beam.

Please check bolt parts

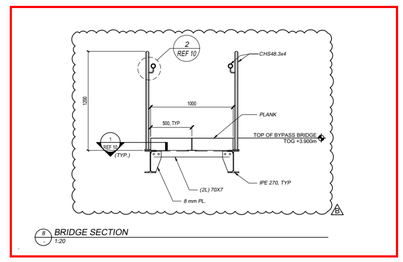

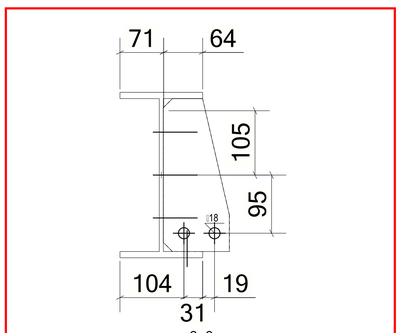

1 *REQUIRED AS DRAWN MARKED* **Z8-B005**

6 October Monorail
Engineering Unit
Valid For Construction

GENERAL NOTES:

1. THE DIMENSIONS SHOWN ARE NOMINAL (IN MILLIMETERS), U.N.O.
2. WELD SIZESHALL BE AISC MINIMUM OF 6 mm UNLESS NOTED OTHERWISE.
3. ALL FIELD WELDS SHALL BE INSPECTED PER QUALITY ASSURANCE AND SPECIAL INSPECTIONS.

REFERENCE DRAWINGS

1	93M-BOA-NAT-LOT-04833
2	93M-BOA-NAT-LOT-09170
3	93M-BOA-NAT-LOT-01976
4	93M-BOA-NAT-LOT-20021
5	
6	
7	
8	
9	

6TH OF OCTOBER CITY RAIL TRANSIT MONORAIL

The Authority | Hill International Consultant | Main Contractor | Structural Designer

KEY PLAN:

SCALE	SHOPDRAWING	DATE
AS SHOWN		

REV	DATE	DSG.	CHK.	APP.	AMENDMENTS	STATUS

DRAWING TITLE
6TH OF OCTOBER MONORAIL
SERVICE WALKWAYS
ZONE
Z8-B005

Project Code	Rubric	Initiator	Lot	Ref	Number	Revision
93M	047	6ACC	60DEP	DWG	08016	B

Tekla structures

Same comments as
93M-0476-ACC-6ODEP-DWG-08012-B

REVIEWED WITH COMMENT
MONORAILS PROJECT

MATERIAL LIST FOR ASSEMBLY MK'D **Z8-B004**

Mark	Profile	GRADE	No.	Length	Area	Weight
Z8-B004	IPE270	S355JR	1	5593	5.82	201.53
W361	PL8*107.9	S355JR	4	250	0.05	1.42
				Total	6.02	207.20

BOLT LIST:-

BOLT \ STUD	BOLT DESCRIPTION		QTY	FINISH
BOLT	B1N2W 16 X 50	A325M	8	
BOLT	B1N2W 20 X 50	A325M	3	
BOLT	B1N2W 20 X 60	A325M	3	

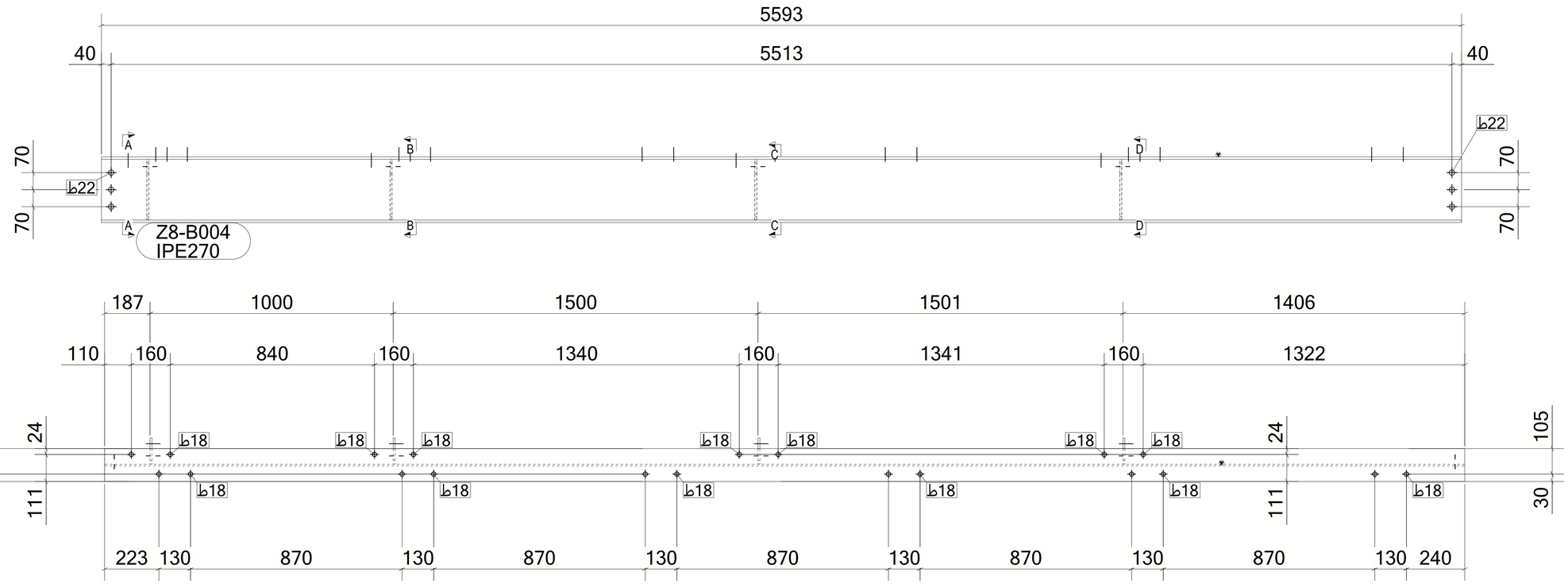

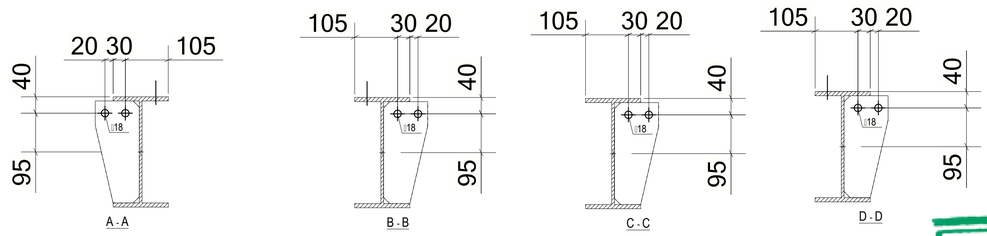

1 *REQUIRED AS DRAWN MARKED* **Z8-B004**

6 October Monorail
Engineering Unit
Valid For Construction

GENERAL NOTES:

1. THE DIMENSIONS SHOWN ARE NOMINAL (IN MILLIMETERS), U.N.O.
2. WELD SIZESHALL BE AISC MINIMUM OF 6 mm UNLESS NOTED OTHERWISE.
3. ALL FIELD WELDS SHALL BE INSPECTED PER QUALITY ASSURANCE AND SPECIAL INSPECTIONS.

REFERENCE DRAWINGS

1	93M-BOA-NAT-LOT-04833
2	93M-BOA-NAT-LOT-09170
3	93M-BOA-NAT-LOT-01976
4	93M-BOA-NAT-LOT-20021
5	
6	
7	
8	
9	

6TH OF OCTOBER CITY RAIL TRANSIT MONORAIL

The Authority | Consultant: Hill International | Main Contractor: ORASCOM CONSTRUCTION / BOMBARDIER | Structural Designer: INNOVA TRANSPORTATION

KEY PLAN:

SCALE	SHOPDRAWING	DATE
AS SHOWN		12/05/2023

REV	DATE	DSG.	CHK.	APP.	AMENDMENTS	STATUS
B	12/05/2023	M.KH	M.KH	DR.M.M	ISSUED FOR INFORMATION	IFI
A	11/20/2022	M.KH	M.KH	DR.M.M	ISSUED FOR INFORMATION	IFI

DRAWING TITLE
6TH OF OCTOBER MONORAIL
SERVICE WALKWAYS
ZONE (1008)
Z8-B004

Project Code	Rubric	Initiator	Lot	Ref	Number	Revision
93M	0476	ACC	60	DEP	DWG-08015	B

Tekla structures

Same comments as
93M-0476-ACC-6ODEP-DWG-08012-B

REVIEWED WITH COMMENT MONORAILS PROJECT

MATERIAL LIST FOR ASSEMBLY MK'D **Z8-B003**

Mark	Profile	GRADE	No.	Length	Area	Weight
Z8-B003	IPE270	S355JR	1	5603	5.83	201.89
W361	PL8*107.9	S355JR	4	250	0.05	1.42
				Total	6.03	207.56

BOLT LIST:-

BOLT \ STUD	BOLT DESCRIPTION		QTY	FINISH
BOLT	B1N2W 16 X 50	A325M	8	
BOLT	B1N2W 20 X 50	A325M	3	
BOLT	B1N2W 20 X 60	A325M	3	

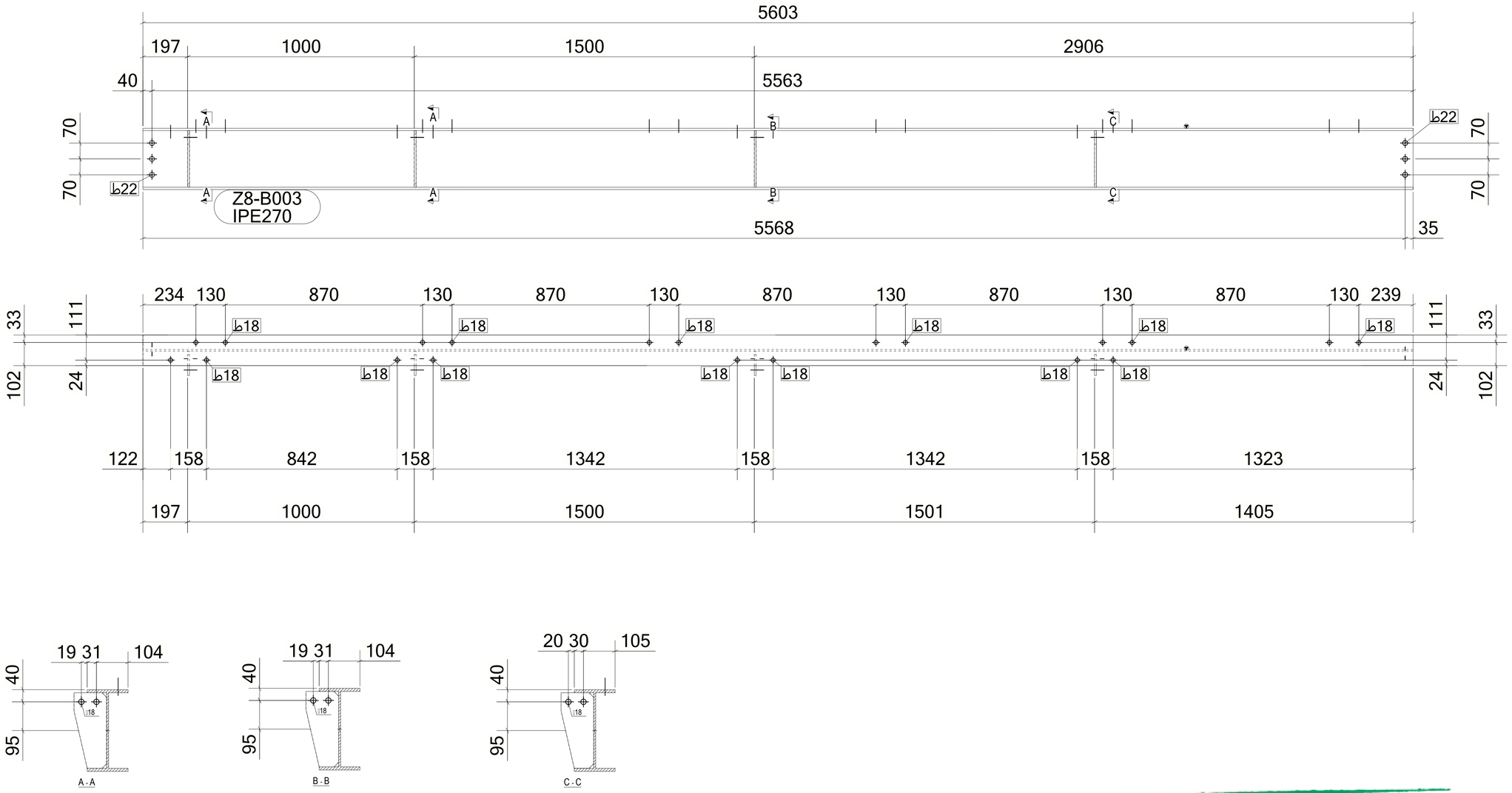

1 *REQUIRED AS DRAWN MARKED* **Z8-B003**

6 October Monorail
Engineering Unit
Valid For Construction

GENERAL NOTES:

1. THE DIMENSIONS SHOWN ARE NOMINAL (IN MILLIMETERS), U.N.O.
2. WELD SIZESHALL BE AISC MINIMUM OF 6 mm UNLESS NOTED OTHERWISE.
3. ALL FIELD WELDS SHALL BE INSPECTED PER QUALITY ASSURANCE AND SPECIAL INSPECTIONS.

REFERENCE DRAWINGS

1	93M-BOA-NAT-LOT-04833
2	93M-BOA-NAT-LOT-09170
3	93M-BOA-NAT-LOT-01976
4	93M-BOA-NAT-LOT-20021
5	
6	
7	
8	
9	

6TH OF OCTOBER CITY RAIL TRANSIT MONORAIL

The Authority | Hill International Consultant | ORASCOM BOMBARDIER Main Contractor | INNOVA Structural Designer

KEY PLAN:

SCALE	SHOPDRAWING	DATE
AS SHOWN		12/05/2023

REV	DATE	DSG.	CHK.	APP.	AMENDMENTS	STATUS
B	12/05/2023	M.KH	M.KH	DR.M.M	ISSUED FOR INFORMATION	IFI
A	11/20/2022	M.KH	M.KH	DR.M.M	ISSUED FOR INFORMATION	IFI

DRAWING TITLE
6TH OF OCTOBER MONORAIL
SERVICE WALKWAYS
ZONE (1008)
Z8-B003

Project Code	Rubric	Initiator	Lot	Ref	Number	Revision
93M	0476	ACC	60DEP	DWG	08014	B

Tekla structures

Same comments as
93M-0476-ACC-6ODEP-DWG-08012-B

REVIEWED WITH COMMENT
MONORAILS PROJECT

MATERIAL LIST FOR ASSEMBLY MK'D **Z8-B002**

Mark	Profile	GRADE	No.	Length	Area	Weight
Z8-B002	IPE270	S355JR	1	5600	5.83	201.79
W361	PL8*107.9	S355JR	3	250	0.05	1.42
				Total	5.98	206.04

BOLT LIST:-

BOLT \ STUD	BOLT DESCRIPTION		QTY	FINISH
BOLT	B1N2W 16 X 50	A325M	7	
BOLT	B1N2W 20 X 50	A325M	3	
BOLT	B1N2W 20 X 60	A325M	3	

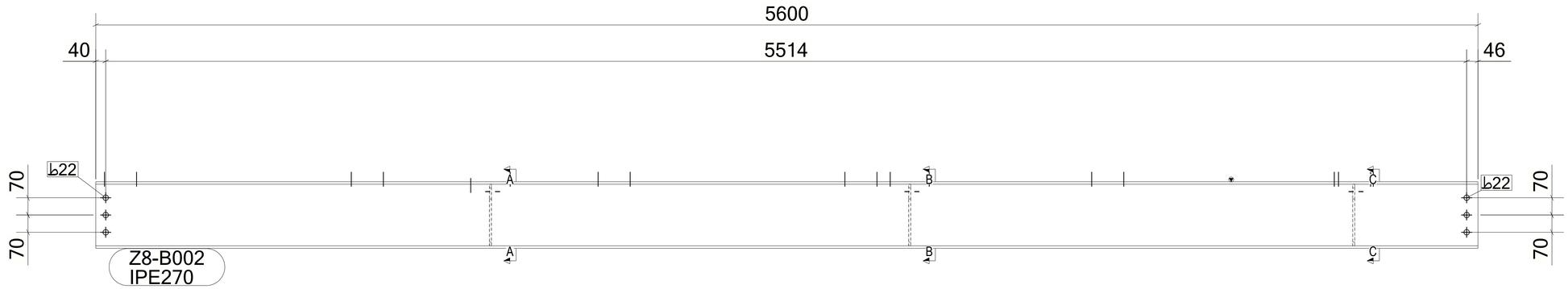

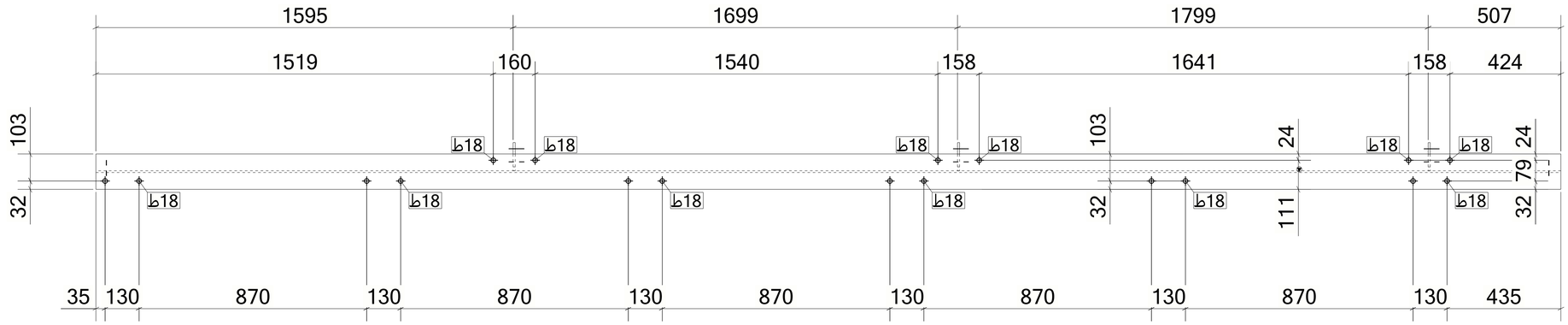

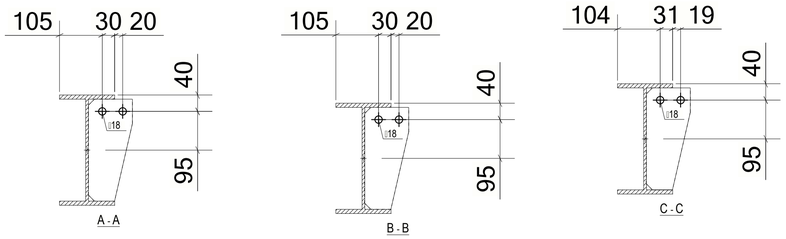

1 *REQUIRED AS DRAWN MARKED* **Z8-B002**

6 October Monorail
Engineering Unit
Valid For Construction

GENERAL NOTES:

1. THE DIMENSIONS SHOWN ARE NOMINAL (IN MILLIMETERS), U.N.O.
2. WELD SIZESHALL BE AISC MINIMUM OF 6 mm UNLESS NOTED OTHERWISE.
3. ALL FIELD WELDS SHALL BE INSPECTED PER QUALITY ASSURANCE AND SPECIAL INSPECTIONS.

REFERENCE DRAWINGS

1	93M-BOA-NAT-LOT-04833
2	93M-BOA-NAT-LOT-09170
3	93M-BOA-NAT-LOT-01976
4	93M-BOA-NAT-LOT-20021
5	
6	
7	
8	
9	

6TH OF OCTOBER CITY RAIL TRANSIT MONORAIL

The Authority | Consultant: Hill International | Main Contractor: ORASCOM CONSTRUCTION, BOMBARDIER | Structural Designer: INNOVA TRANSPORTATION

KEY PLAN:

SCALE: AS SHOWN | SHOPDRAWING | DATE: 12/05/2023

REV	DATE	DSG.	CHK.	APP.	AMENDMENTS	STATUS
B	12/05/2023	M.KH	M.KH	DR.M.M	ISSUED FOR INFORMATION	IFI
A	11/20/2022	M.KH	M.KH	DR.M.M	ISSUED FOR INFORMATION	IFI

DRAWING TITLE
6TH OF OCTOBER MONORAIL
SERVICE WALKWAYS
ZONE (1008)
Z8-B002

Project Code	Rubric	Initiator	Lot	Ref	Number	Revision
93M0476	ACC	60	DEP	DWG	08013	B

Tekla structures

-Check that the end plate of the guardrail bolted to the beam should be completely rested on the beam as shown in the design reference.

MATERIAL LIST FOR ASSEMBLY MK'D **Z8-B001**

Mark	Profile	GRADE	No.	Length	Area	Weight
Z8-B001	IPE270	S355JR	1	5600	5.83	201.79
W361	PL8*107.9	S355JR	3	250	0.05	1.42
				Total	5.98	206.04

BOLT LIST:-

BOLT \ STUD	BOLT DESCRIPTION	QTY	FINISH
BOLT	B1N2W 16 X 50 A325M	7	
BOLT	B1N2W 20 X 50 A325M	6	

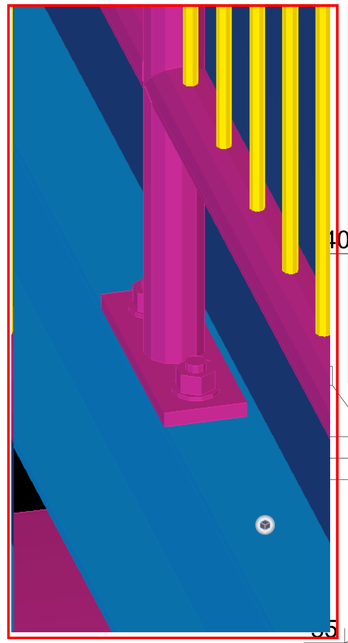

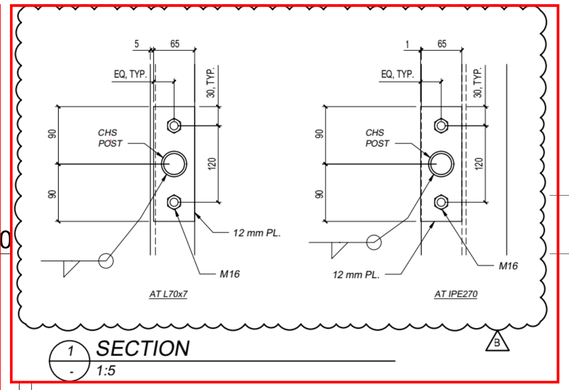

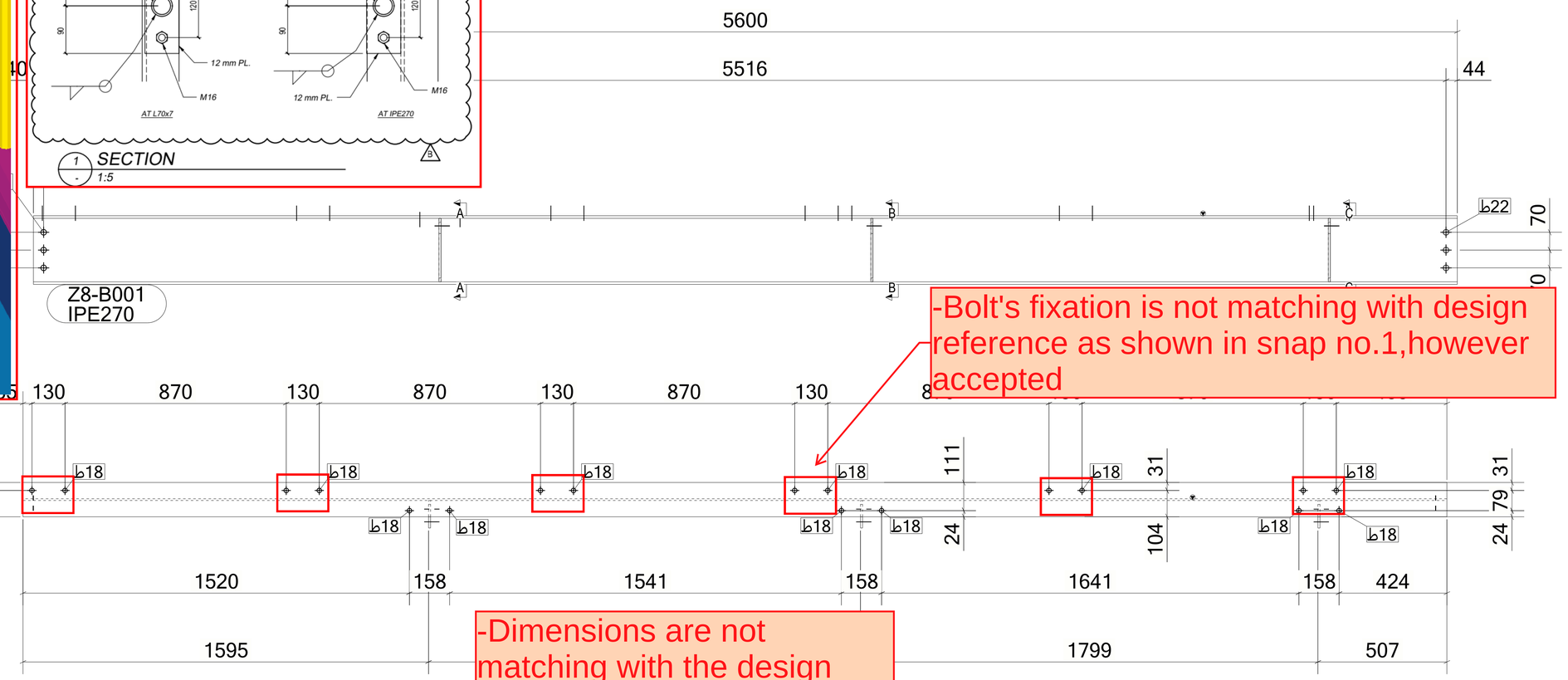

-Bolt's fixation is not matching with design reference as shown in snap no.1,however accepted

-Dimensions are not matching with the design drawings as shown below ,however accepted

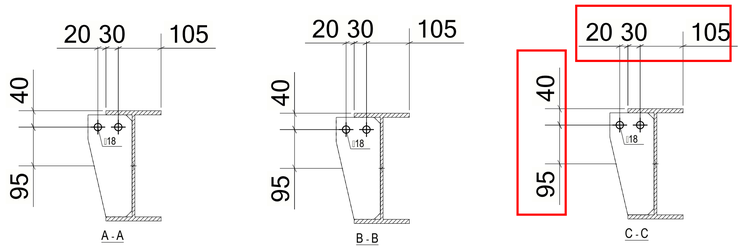

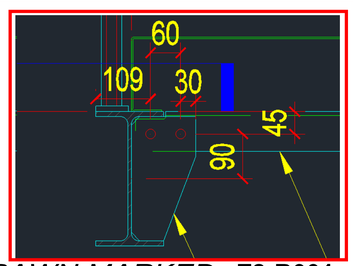

1 *REQUIRED AS DRAWN MARKED* **Z8-B001**

6 October Monorail
Engineering Unit
Valid For Construction

GENERAL NOTES:

1. THE DIMENSIONS SHOWN ARE NOMINAL (IN MILLIMETERS), U.N.O.
2. WELD SIZESHALL BE AISC MINIMUM OF 6 mm UNLESS NOTED OTHERWISE.
3. ALL FIELD WELDS SHALL BE INSPECTED PER QUALITY ASSURANCE AND SPECIAL INSPECTIONS.

REFERENCE DRAWINGS

1	93M-BOA-NAT-LOT-04833
2	93M-BOA-NAT-LOT-09170
3	93M-BOA-NAT-LOT-01976
4	93M-BOA-NAT-LOT-20021
5	
6	
7	
8	
9	

6TH OF OCTOBER CITY RAIL TRANSIT MONORAIL

The Authority | Consultant: Hill International | Main Contractor: ORASCOM / BOMBARDIER | Structural Designer: INNOVA

KEY PLAN:

SCALE: AS SHOWN | SHOPDRAWING | DATE: 12/05/2023

REV	DATE	DSG.	CHK.	APP.	AMENDMENTS	STATUS
B	12/05/2023	M.KH	M.KH	DR.M.M	ISSUED FOR INFORMATION	IFI
A	11/20/2022	M.KH	M.KH	DR.M.M	ISSUED FOR INFORMATION	IFI

DRAWING TITLE
6TH OF OCTOBER MONORAIL
SERVICE WALKWAYS
ZONE (1008)
Z8-B001

Project Code	Rubric	Initiator	Lot	Ref	Number	Revision
93M	047	6ACC	60DEP	DWG	0801	2 B

Tekla structures

Same comments as 93M-0476-ACC-60DEP-DWG-08180-B.

REVIEWED WITH COMMENT
MONORAILS PROJECT

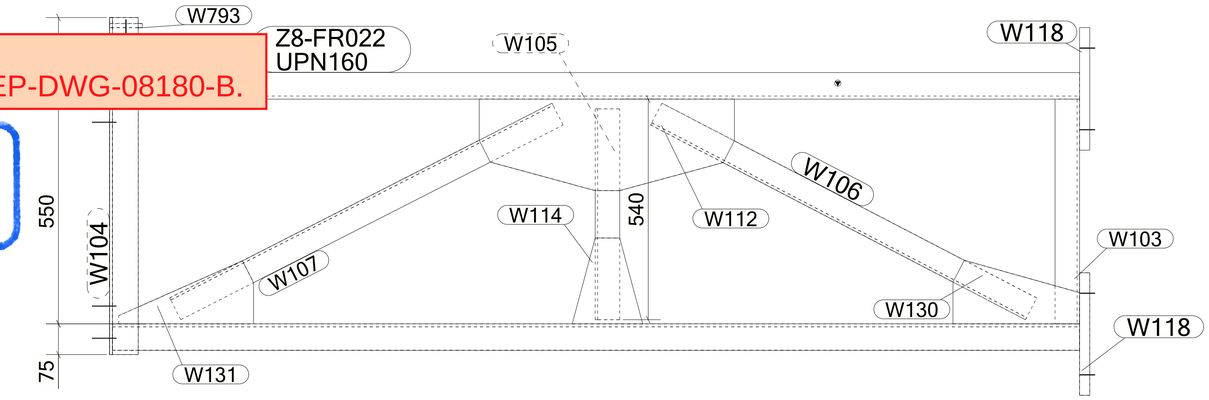

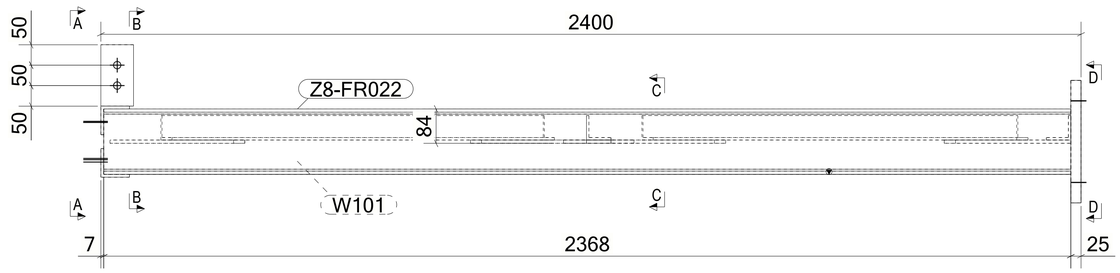

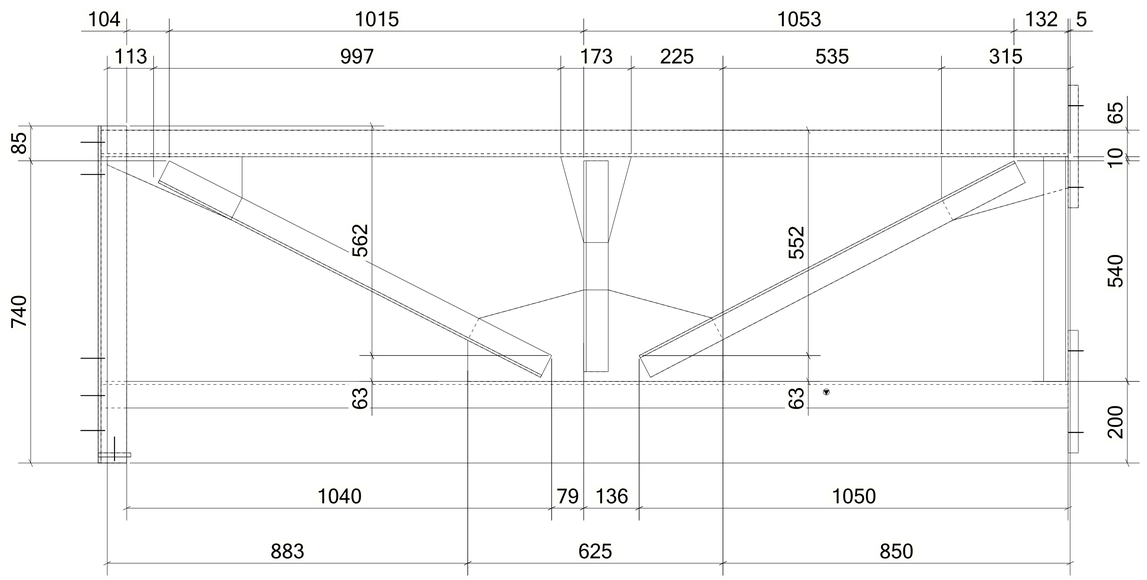

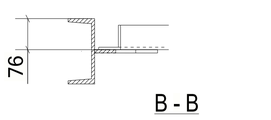

B - B

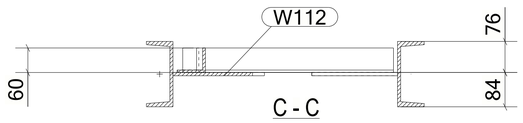

C - C

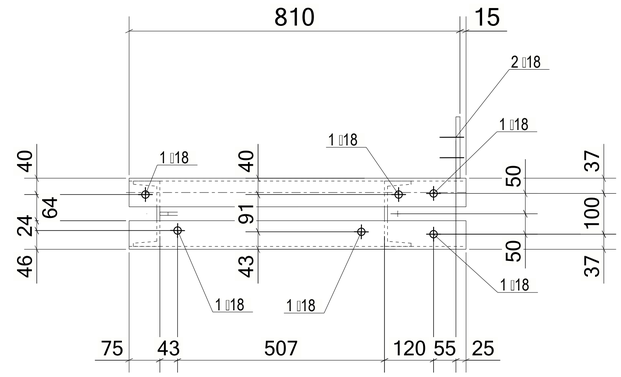

A - A

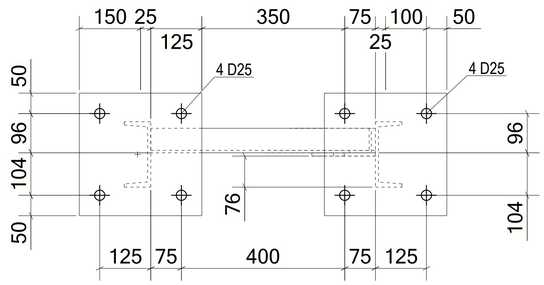

D - D

1 *REQUIRED AS DRAWN MARKED* **Z8-FR022**

MATERIAL LIST FOR ASSEMBLY MK'D **Z8-FR022**

Mark	Profile	GRADE	No.	Length	Area	Weight
Z8-FR022	UPN160	S235JR	1	2368	1.30	44.61
W101	UPN160	S235JR	1	2368	1.30	44.61
W103	L60*6	S235JR	1	550	0.13	2.95
W104	L70*7	S235JR	1	825	0.23	6.03
W105	L60*6	S235JR	1	516	0.13	2.77
W106	L60*6	S235JR	1	1034	0.25	5.55
W107	L60*6	S235JR	1	1051	0.25	5.64
W112	PL8*223.9	S355JR	1	625	0.25	7.35
W114	PL8*166.7	S355JR	1	233	0.05	1.53
W118	PL25*300	S355JR	2	300	0.21	17.66
W130	PL8*155.4	S355JR	1	310	0.08	2.28
W131	PL8*154.2	S355JR	1	330	0.07	1.87
W140	L70*7	S235JR	1	825	0.23	6.03
W793	PL10*80	S355JR	1	150	0.03	0.94
				Total	4.73	167.51

BOLT LIST:-

BOLT \ STUD	BOLT DESCRIPTION	QTY	FINISH

6 October Monorail
Engineering Unit
Valid For Construction

GENERAL NOTES:

1. THE DIMENSIONS SHOWN ARE NOMINAL (IN MILLIMETERS), U.N.O.
2. WELD SIZESHALL BE AISC MINIMUM OF 6 mm UNLESS NOTED OTHERWISE.
3. ALL FIELD WELDS SHALL BE INSPECTED PER QUALITY ASSURANCE AND SPECIAL INSPECTIONS.

REFERENCE DRAWINGS

1	93M-BOA-NAT-LOT-04833
2	93M-BOA-NAT-LOT-09170
3	93M-BOA-NAT-LOT-01976
4	93M-BOA-NAT-LOT-20021
5	
6	
7	
8	
9	

6TH OF OCTOBER CITY RAIL TRANSIT MONORAIL

The Authority | Hill International (Consultant) | ORASCOM CONSTRUCTION / BOMBARDIER (Main Contractor) | INNOVA TRANSPORTATION (Structural Designer)

KEY PLAN:

SCALE: AS SHOWN | SHOPDRAWING | DATE: 12/05/2023

REV	DATE	DSG.	CHK.	APP.	AMENDMENTS	STATUS
B	12/05/2023	M.KH	M.KH	DR.M.M	ISSUED FOR INFORMATION	IFI
A	11/20/2022	M.KH	M.KH	DR.M.M	ISSUED FOR INFORMATION	IFI

DRAWING TITLE
6TH OF OCTOBER MONORAIL
SERVICE WALKWAYS
ZONE (1008)
Z8-FR022

Project Code	Rubric	Initiator	Lot	Ref	Number	Revision
93M	0476	ACC	60DEP	DWG	08201	B

Tekla structures

Same comments as
93M-0476-ACC-60DEP-DWG-08180-B.

REVIEWED WITH COMMENT
MONORAILS PROJECT

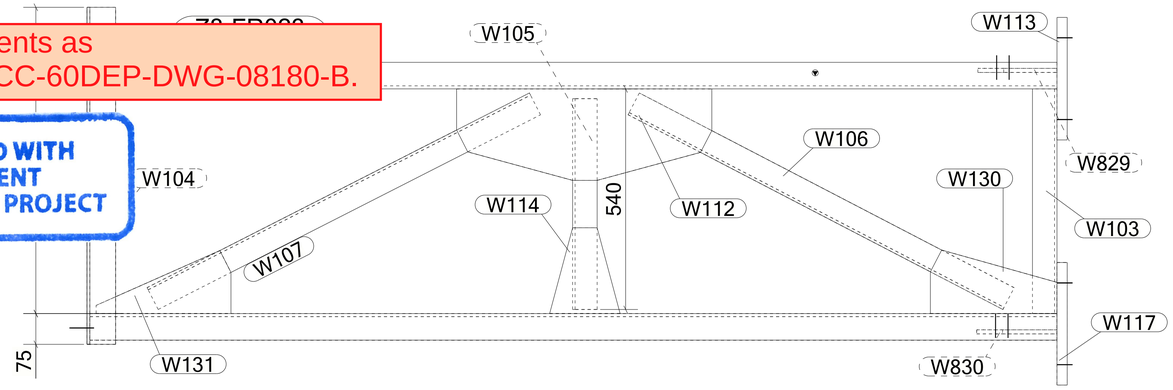

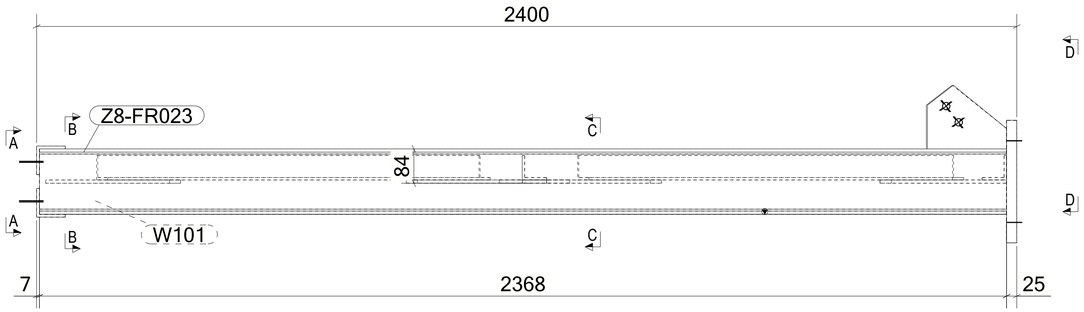

1 *REQUIRED AS DRAWN MARKED* **Z8-FR023**

MATERIAL LIST FOR ASSEMBLY MK'D **Z8-FR023**

Mark	Profile	GRADE	No.	Length	Area	Weight
Z8-FR023	UPN160	S235JR	1	2368	1.30	44.61
W101	UPN160	S235JR	1	2368	1.30	44.61
W103	L60*6	S235JR	1	550	0.13	2.95
W104	L70*7	S235JR	1	825	0.23	6.03
W105	L60*6	S235JR	1	516	0.13	2.77
W106	L60*6	S235JR	1	1034	0.25	5.55
W107	L60*6	S235JR	1	1051	0.25	5.64
W111	L70*7	S235JR	1	825	0.23	6.03
W112	PL8*223.9	S355JR	1	625	0.25	7.35
W113	PL25*300	S355JR	1	300	0.21	17.66
W114	PL8*166.7	S355JR	1	233	0.05	1.53
W117	PL25*300	S355JR	1	300	0.21	17.66
W130	PL8*155.4	S355JR	1	310	0.08	2.28
W131	PL8*154.2	S355JR	1	330	0.07	1.87
W829	PL10*156	S355JR	1	194	0.05	1.71
W830	PL10*156	S355JR	1	196	0.05	1.73
				Total	4.80	170.00

BOLT LIST:-

BOLT \ STUD	BOLT DESCRIPTION	QTY	FINISH

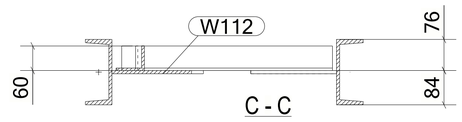

C - C

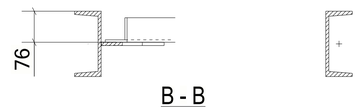

B - B

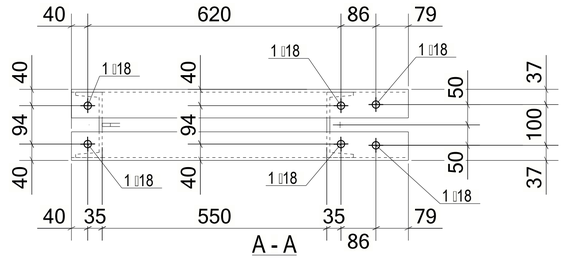

A - A

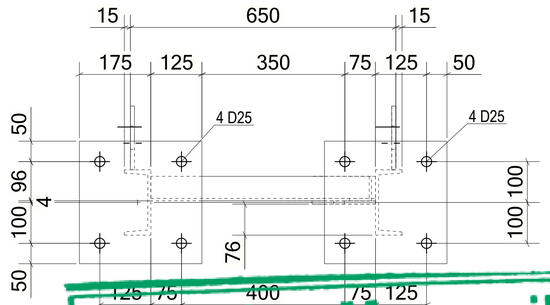

D - D

6 October Monorail
Engineering Unit
Valid For Construction

GENERAL NOTES:

1. THE DIMENSIONS SHOWN ARE NOMINAL (IN MILLIMETERS), U.N.O.
2. WELD SIZESHALL BE AISC MINIMUM OF 6 mm UNLESS NOTED OTHERWISE.
3. ALL FIELD WELDS SHALL BE INSPECTED PER QUALITY ASSURANCE AND SPECIAL INSPECTIONS.

REFERENCE DRAWINGS

1	93M-BOA-NAT-LOT-04833
2	93M-BOA-NAT-LOT-09170
3	93M-BOA-NAT-LOT-01976
4	93M-BOA-NAT-LOT-20021
5	
6	
7	
8	
9	

6TH OF OCTOBER CITY RAIL TRANSIT MONORAIL

The Authority | Consultant: Hill International | Main Contractor: ORASCOM CONSTRUCTION / BOMBARDIER | Structural Designer: INNOVA TRANSPORTATION

KEY PLAN:

SCALE	SHOPDRAWING	DATE
AS SHOWN		12/05/2023

REV	DATE	DSG.	CHK.	APP.	AMENDMENTS	STATUS
B	12/05/2023	M.KH	M.KH	DR.M.M	ISSUED FOR INFORMATION	IFI
A	11/20/2022	M.KH	M.KH	DR.M.M	ISSUED FOR INFORMATION	IFI

DRAWING TITLE
6TH OF OCTOBER MONORAIL
SERVICE WALKWAYS
ZONE (1008)
Z8-FR023

Project Code	Rubric	Initiator	Lot	Ref	Number	Revision
93M	0476	ACC	60DEP	DWG	08202	B

Tekla structures

Same comments as
93M-0476-ACC-60DEP-DWG-08180-B.

REVIEWED WITH COMMENT
MONORAILS PROJECT

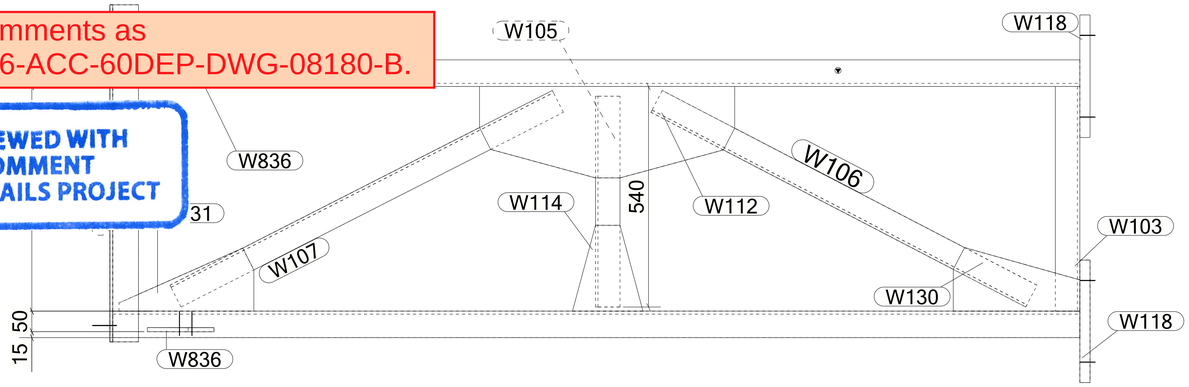

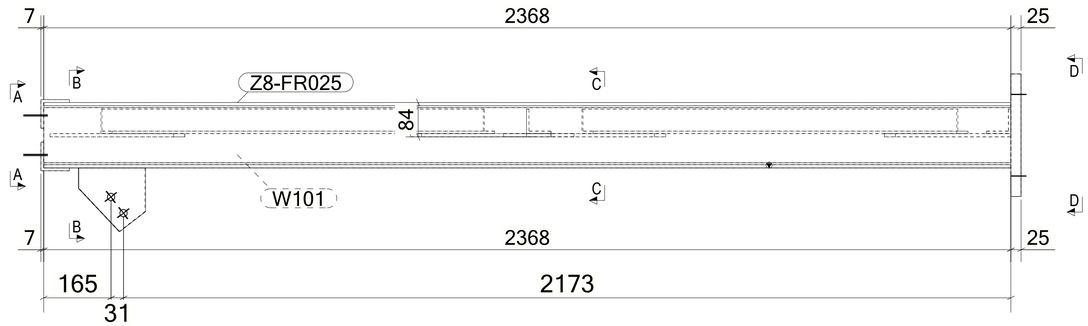

MATERIAL LIST FOR ASSEMBLY MK'D **Z8-FR025**

Mark	Profile	GRADE	No.	Length	Area	Weight
Z8-FR025	UPN160	S235JR	1	2368	1.30	44.61
W101	UPN160	S235JR	1	2368	1.30	44.61
W103	L60*6	S235JR	1	550	0.13	2.95
W105	L60*6	S235JR	1	516	0.13	2.77
W106	L60*6	S235JR	1	1034	0.25	5.55
W107	L60*6	S235JR	1	1051	0.25	5.64
W111	L70*7	S235JR	1	825	0.23	6.03
W112	PL8*223.9	S355JR	1	625	0.25	7.35
W114	PL8*166.7	S355JR	1	233	0.05	1.53
W118	PL25*300	S355JR	2	300	0.21	17.66
W130	PL8*155.4	S355JR	1	310	0.08	2.28
W131	PL8*154.2	S355JR	1	330	0.07	1.87
W135	L70*7	S235JR	1	825	0.23	6.03
W836	PL10*156	S355JR	2	163	0.04	1.46
				Total	4.78	169.49

BOLT LIST:-

BOLT \ STUD	BOLT DESCRIPTION	QTY	FINISH

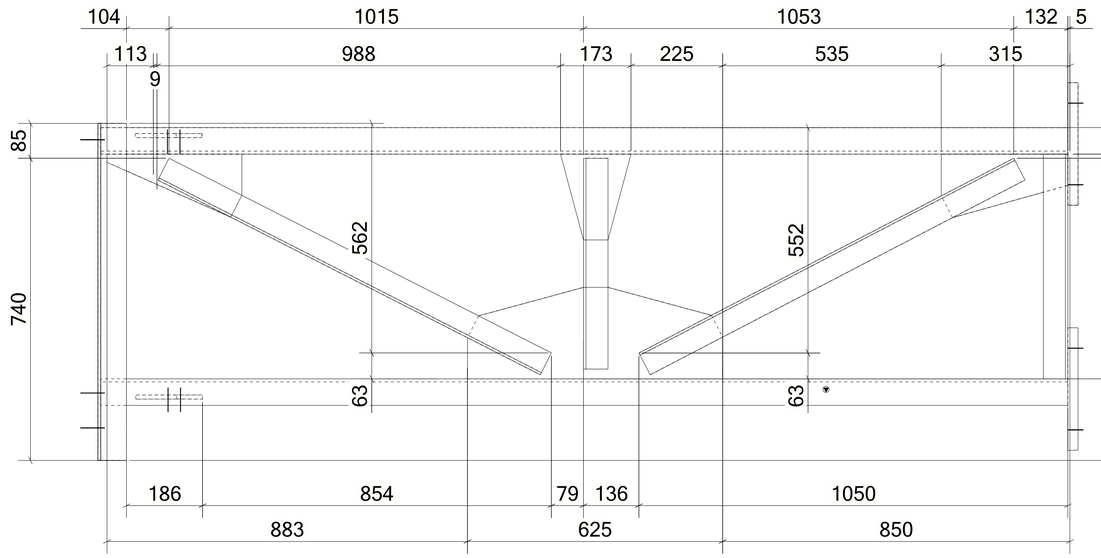

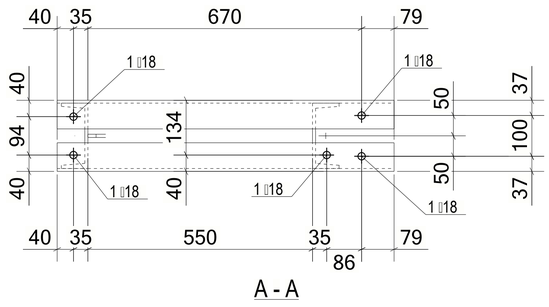

A - A

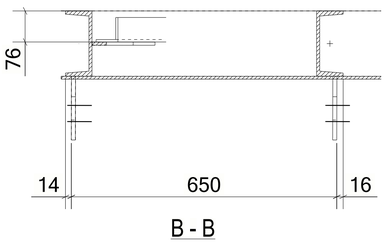

B - B

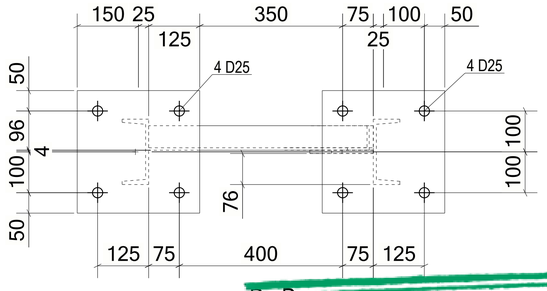

D - D

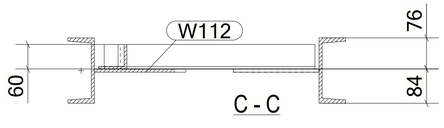

C - C

1 *REQUIRED AS DRAWN MARKED* **Z8-FR025**

6 October Monorail
Engineering Unit
Valid For Construction

GENERAL NOTES:

1. THE DIMENSIONS SHOWN ARE NOMINAL (IN MILLIMETERS), U.N.O.
2. WELD SIZESHALL BE AISC MINIMUM OF 6 mm UNLESS NOTED OTHERWISE.
3. ALL FIELD WELDS SHALL BE INSPECTED PER QUALITY ASSURANCE AND SPECIAL INSPECTIONS.

REFERENCE DRAWINGS

1	93M-BOA-NAT-LOT-04833
2	93M-BOA-NAT-LOT-09170
3	93M-BOA-NAT-LOT-01976
4	93M-BOA-NAT-LOT-20021
5	
6	
7	
8	
9	

6TH OF OCTOBER CITY RAIL TRANSIT MONORAIL

The Authority | Consultant: Hill International | Main Contractor: ORASCOM CONSTRUCTION / BOMBARDIER | Structural Designer: INNOVA TRANSPORTATION

KEY PLAN:

SCALE: AS SHOWN | SHOPDRAWING | DATE: 12/05/2023

REV	DATE	DSG.	CHK.	APP.	AMENDMENTS	STATUS
B	12/05/2023	M.KH	M.KH	DR.M.M	ISSUED FOR INFORMATION	IFI
A	11/20/2022	M.KH	M.KH	DR.M.M	ISSUED FOR INFORMATION	IFI

DRAWING TITLE
6TH OF OCTOBER MONORAIL
SERVICE WALKWAYS
ZONE (1008)
Z8-FR025

Project Code	Rubric	Initiator	Lot	Ref	Number	Revision
9 3 M	0 4 7 6	A C C	6 0 D E P	D W G	0 8 2 0 3	B

Tekla structures

Same comments as
93M-0476-ACC-60DEP-DWG-08180-B.

REVIEWED WITH COMMENT
MONORAILS PROJECT

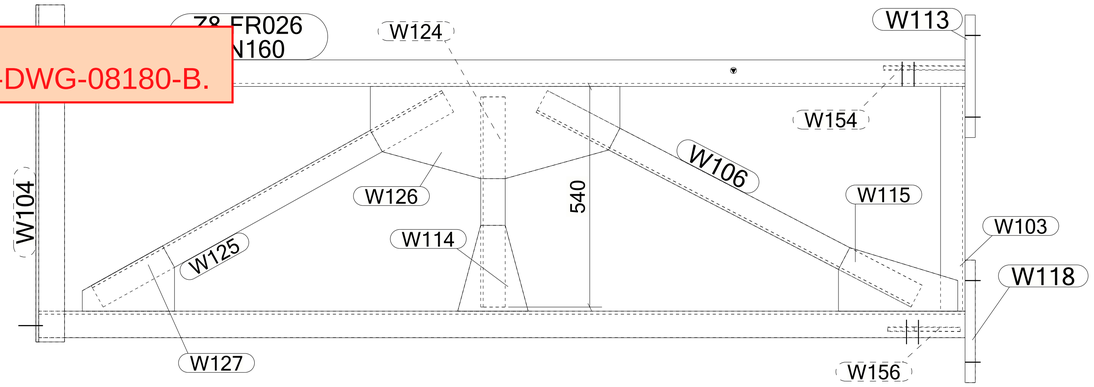

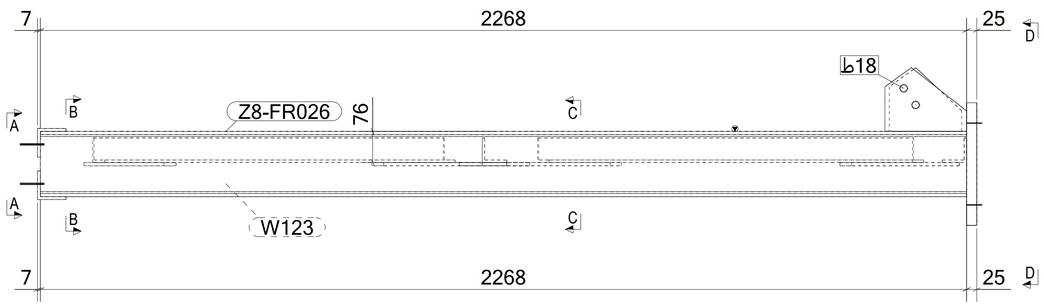

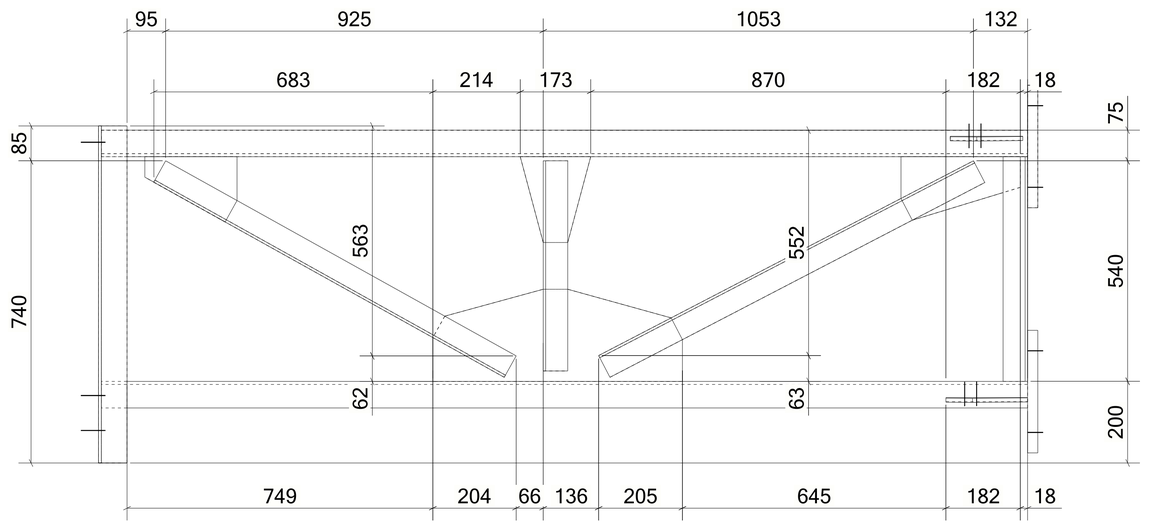

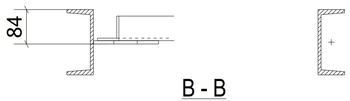

B - B

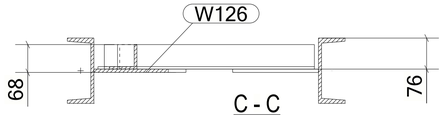

C - C

1 *REQUIRED AS DRAWN MARKED* **Z8-FR026**

MATERIAL LIST FOR ASSEMBLY MK'D **Z8-FR026**

Mark	Profile	GRADE	No.	Length	Area	Weight
Z8-FR026	UPN160	S235JR	1	2268	1.25	42.73
W103	L60*6	S235JR	1	550	0.13	2.95
W104	L70*7	S235JR	1	825	0.23	6.03
W106	L60*6	S235JR	1	1034	0.25	5.55
W111	L70*7	S235JR	1	825	0.23	6.03
W113	PL25*300	S355JR	1	300	0.21	17.66
W114	PL8*166.7	S355JR	1	233	0.05	1.53
W115	PL8*155.4	S355JR	1	292	0.07	2.14
W118	PL25*300	S355JR	1	300	0.21	17.66
W123	UPN160	S235JR	1	2268	1.25	42.73
W124	L60*6	S235JR	1	514	0.12	2.76
W125	L60*6	S235JR	1	982	0.24	5.27
W126	PL8*225.5	S355JR	1	611	0.24	7.26
W127	PL8*159.7	S355JR	1	226	0.05	1.54
W154	PL10*155.7	S355JR	1	200	0.05	1.76
W156	PL10*155.7	S355JR	1	177	0.05	1.58
				Total	4.65	165.20

BOLT LIST:-

BOLT \ STUD	BOLT DESCRIPTION	QTY	FINISH

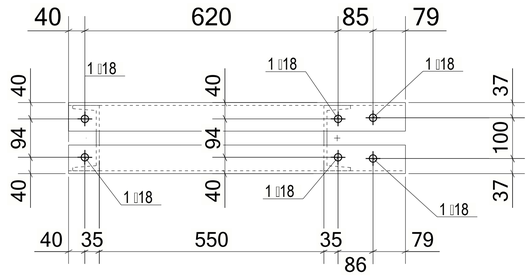

A - A

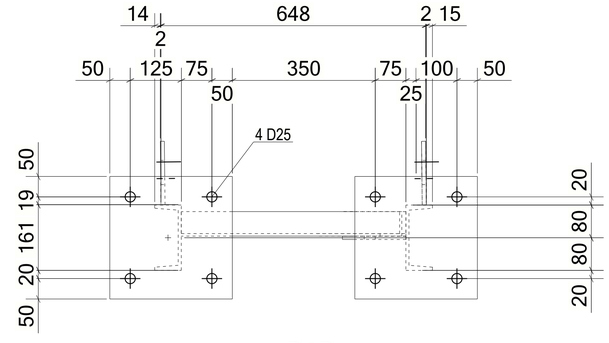

D D

6 October Monorail
Engineering Unit
Valid For Construction

GENERAL NOTES:

1. THE DIMENSIONS SHOWN ARE NOMINAL (IN MILLIMETERS), U.N.O.
2. WELD SIZESHALL BE AISC MINIMUM OF 6 mm UNLESS NOTED OTHERWISE.
3. ALL FIELD WELDS SHALL BE INSPECTED PER QUALITY ASSURANCE AND SPECIAL INSPECTIONS.

REFERENCE DRAWINGS

1	93M-BOA-NAT-LOT-04833
2	93M-BOA-NAT-LOT-09170
3	93M-BOA-NAT-LOT-01976
4	93M-BOA-NAT-LOT-20021
5	
6	
7	
8	
9	

6TH OF OCTOBER CITY RAIL TRANSIT MONORAIL

The Authority | Consultant | Main Contractor | Structural Designer

KEY PLAN:

SCALE	SHOPDRAWING	DATE
AS SHOWN		12/05/2023

REV	DATE	DSG.	CHK.	APP.	AMENDMENTS	STATUS
B	12/05/2023	M.KH	M.KH	DR.M.M	ISSUED FOR INFORMATION	IFI
A	11/20/2022	M.KH	M.KH	DR.M.M	ISSUED FOR INFORMATION	IFI

DRAWING TITLE
6TH OF OCTOBER MONORAIL
SERVICE WALKWAYS
ZONE (1008)
Z8-FR026

Project Code	Rubric	Initiator	Lot	Ref	Number	Revision
93M	047	6ACC	60DE	PDWG	08204	B

Tekla structures

Same comments as
93M-0476-ACC-60DEP-DWG-08180-B.

REVIEWED WITH COMMENT
MONORAILS PROJECT

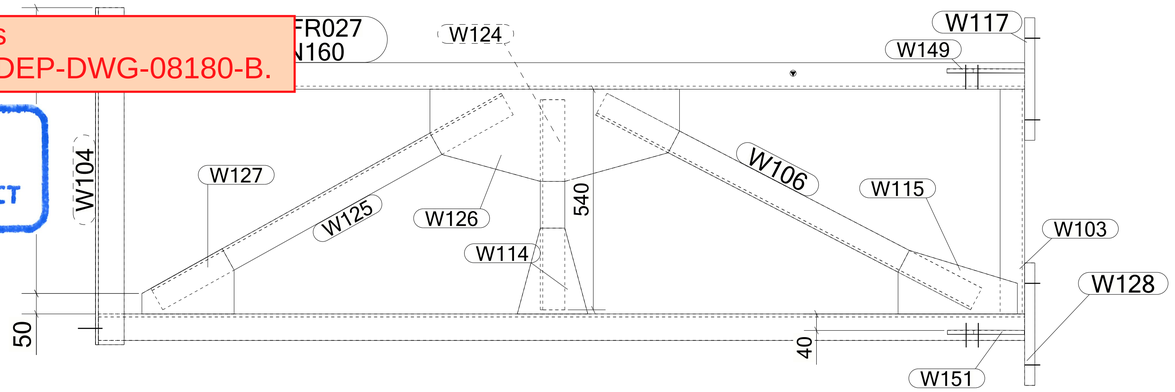

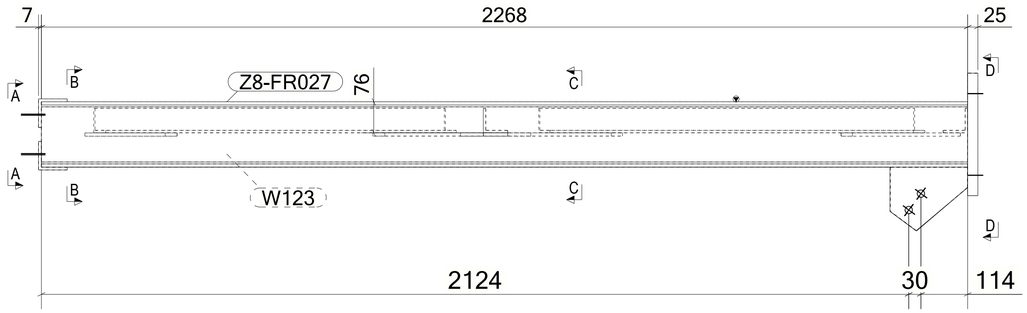

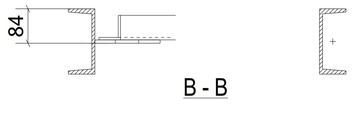

B - B

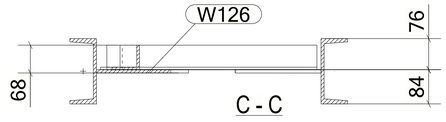

C - C

1 *REQUIRED AS DRAWN MARKED* **Z8-FR027**

MATERIAL LIST FOR ASSEMBLY MK'D **Z8-FR027**

Mark	Profile	GRADE	No.	Length	Area	Weight
Z8-FR027	UPN160	S235JR	1	2268	1.25	42.73
W103	L60*6	S235JR	1	550	0.13	2.95
W104	L70*7	S235JR	1	825	0.23	6.03
W106	L60*6	S235JR	1	1034	0.25	5.55
W111	L70*7	S235JR	1	825	0.23	6.03
W114	PL8*166.7	S355JR	1	233	0.05	1.53
W115	PL8*155.4	S355JR	1	292	0.07	2.14
W117	PL25*300	S355JR	1	300	0.21	17.66
W123	UPN160	S235JR	1	2268	1.25	42.73
W124	L60*6	S235JR	1	514	0.12	2.76
W125	L60*6	S235JR	1	982	0.24	5.27
W126	PL8*225.5	S355JR	1	611	0.24	7.26
W127	PL8*159.7	S355JR	1	226	0.05	1.54
W128	PL25*300	S355JR	1	300	0.21	17.66
W149	PL10*156	S355JR	1	190	0.05	1.69
W151	PL10*156	S355JR	1	188	0.05	1.67
				Total	4.65	165.21

BOLT LIST:-

BOLT \ STUD	BOLT DESCRIPTION	QTY	FINISH

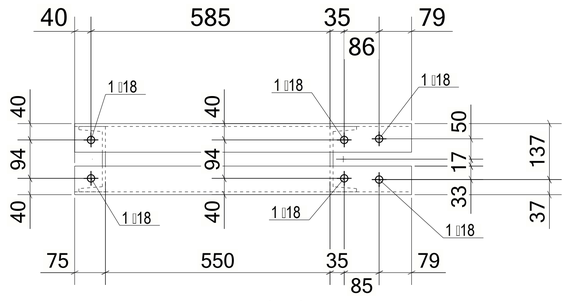

A - A

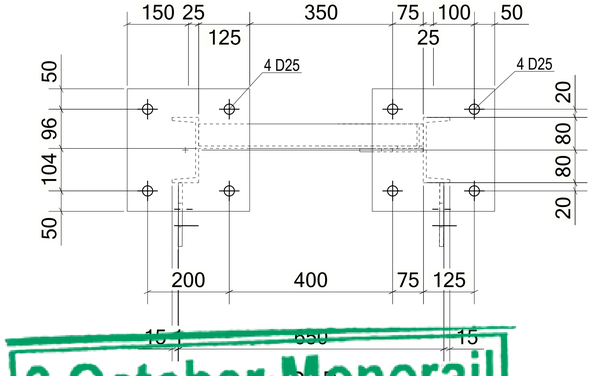

D - D

6 October Monorail
Engineering Unit
Valid For Construction

GENERAL NOTES:

1. THE DIMENSIONS SHOWN ARE NOMINAL (IN MILLIMETERS), U.N.O.
2. WELD SIZESHALL BE AISC MINIMUM OF 6 mm UNLESS NOTED OTHERWISE.
3. ALL FIELD WELDS SHALL BE INSPECTED PER QUALITY ASSURANCE AND SPECIAL INSPECTIONS.

REFERENCE DRAWINGS

1	93M-BOA-NAT-LOT-04833
2	93M-BOA-NAT-LOT-09170
3	93M-BOA-NAT-LOT-01976
4	93M-BOA-NAT-LOT-20021
5	
6	
7	
8	
9	

6TH OF OCTOBER CITY RAIL TRANSIT MONORAIL

The Authority — Consultant — Main Contractor — Structural Designer

KEY PLAN:

SCALE	SHOPDRAWING	DATE
AS SHOWN		12/05/2023

REV	DATE	DSG.	CHK.	APP.	AMENDMENTS	STATUS
B	12/05/2023	M.KH	M.KH	DR.M.M	ISSUED FOR INFORMATION	IFI
A	11/20/2022	M.KH	M.KH	DR.M.M	ISSUED FOR INFORMATION	IFI

DRAWING TITLE
6TH OF OCTOBER MONORAIL
SERVICE WALKWAYS
ZONE (1008)
Z8-FR027

Project Code	Rubric	Initiator	Lot	Ref	Number	Revision
93	M047	6ACC	60DEP	DWG	08205	B

Tekla structures

Same comments as
93M-0476-ACC-60DEP-DWG-08180-B.

REVIEWED WITH COMMENT
MONORAILS PROJECT

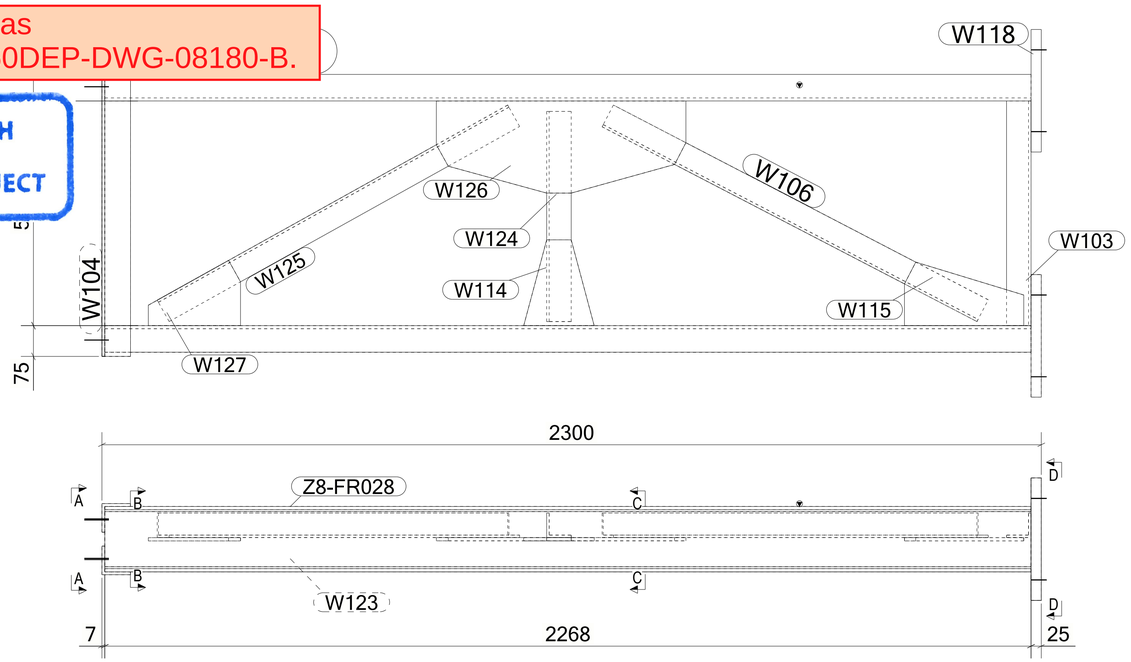

MATERIAL LIST FOR ASSEMBLY MK'D **Z8-FR028**

Mark	Profile	GRADE	No.	Length	Area	Weight
Z8-FR028	UPN160	S235JR	1	2268	1.25	42.73
W103	L60*6	S235JR	1	550	0.13	2.95
W104	L70*7	S235JR	1	825	0.23	6.03
W106	L60*6	S235JR	1	1034	0.25	5.55
W111	L70*7	S235JR	1	825	0.23	6.03
W114	PL8*166.7	S355JR	1	233	0.05	1.53
W115	PL8*155.4	S355JR	1	292	0.07	2.14
W118	PL25*300	S355JR	2	300	0.21	17.66
W123	UPN160	S235JR	1	2268	1.25	42.73
W124	L60*6	S235JR	1	514	0.12	2.76
W125	L60*6	S235JR	1	982	0.24	5.27
W126	PL8*225.5	S355JR	1	611	0.24	7.26
W127	PL8*159.7	S355JR	1	226	0.05	1.54
				Total	4.55	161.86

BOLT LIST:-

BOLT \ STUD	BOLT DESCRIPTION	QTY	FINISH

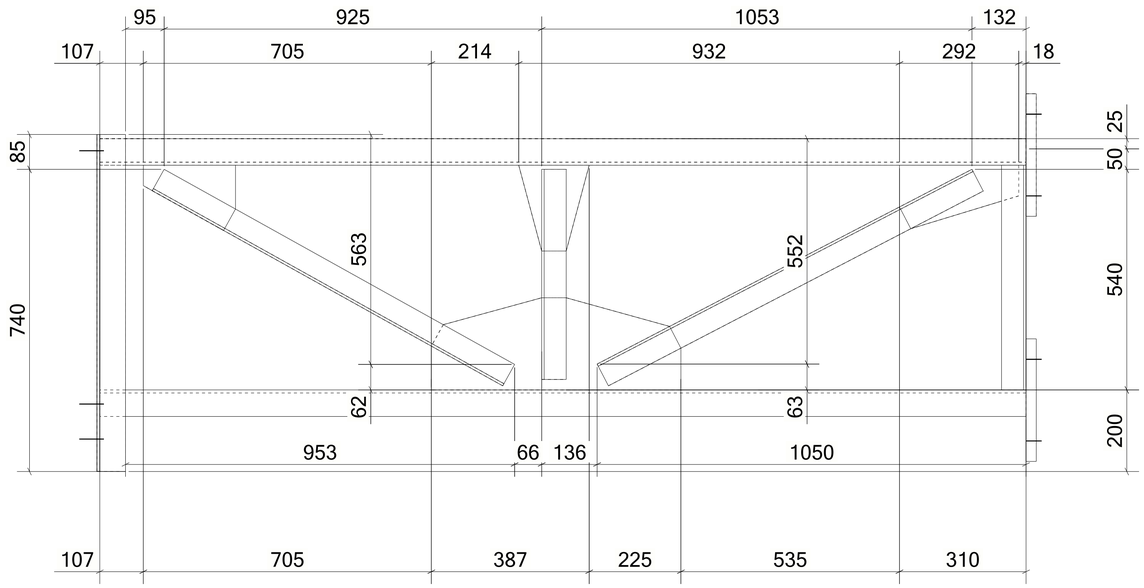

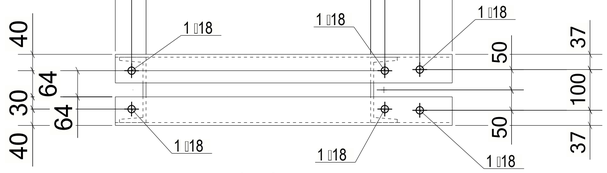

A - A

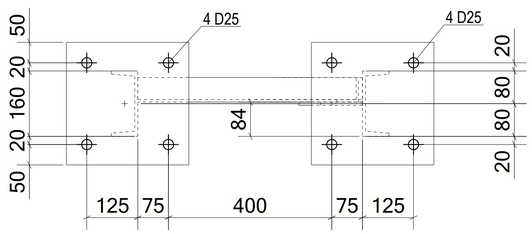

D - D

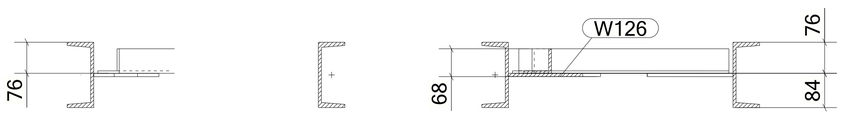

B - B

C - C

10 *REQUIRED AS DRAWN MARKED* **Z8-FR028**

6 October Monorail
Engineering Unit
Valid For Construction

GENERAL NOTES:

1. THE DIMENSIONS SHOWN ARE NOMINAL (IN MILLIMETERS), U.N.O.
2. WELD SIZESHALL BE AISC MINIMUM OF 6 mm UNLESS NOTED OTHERWISE.
3. ALL FIELD WELDS SHALL BE INSPECTED PER QUALITY ASSURANCE AND SPECIAL INSPECTIONS.

REFERENCE DRAWINGS

1	93M-BOA-NAT-LOT-04833
2	93M-BOA-NAT-LOT-09170
3	93M-BOA-NAT-LOT-01976
4	93M-BOA-NAT-LOT-20021
5	
6	
7	
8	
9	

6TH OF OCTOBER CITY RAIL TRANSIT MONORAIL

The Authority | Consultant: Hill International | Main Contractor: Orascom Construction / Bombardier | Structural Designer: Innova Transportation

KEY PLAN:

SCALE	SHOPDRAWING	DATE
AS SHOWN		12/05/2023

REV	DATE	DSG.	CHK.	APP.	AMENDMENTS	STATUS
B	12/05/2023	M.KH	M.KH	DR.M.M	ISSUED FOR INFORMATION	IFI
A	11/20/2022	M.KH	M.KH	DR.M.M	ISSUED FOR INFORMATION	IFI

DRAWING TITLE
6TH OF OCTOBER MONORAIL
SERVICE WALKWAYS
ZONE (1008)
Z8-FR028

Project Code	Rubric	Initiator	Lot	Ref	Number	Revision
93M	0476	ACC	60DEP	DWG	08206	B

Tekla structures

Same comments as
93M-0476-ACC-60DEP-DWG-08180-B.

REVIEWED WITH COMMENT
MONORAILS PROJECT

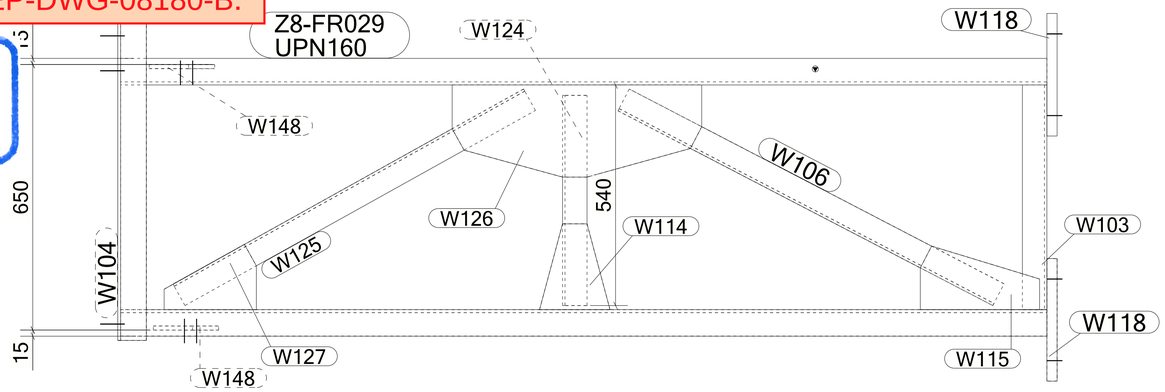

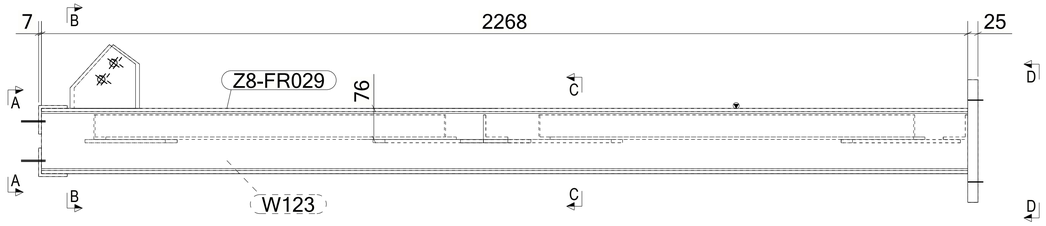

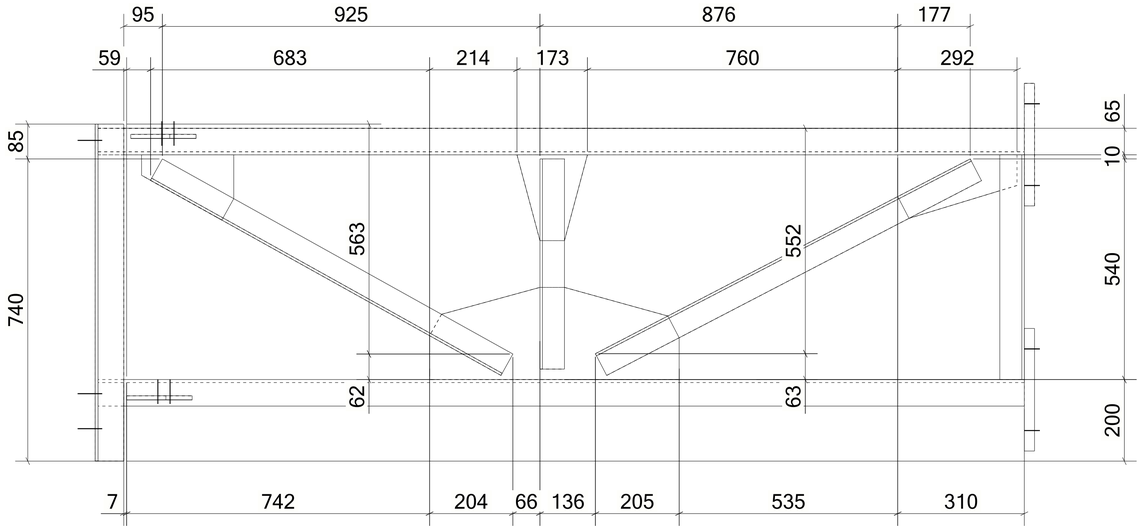

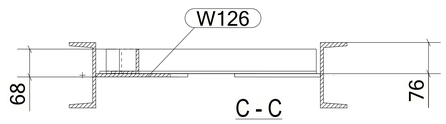

C - C

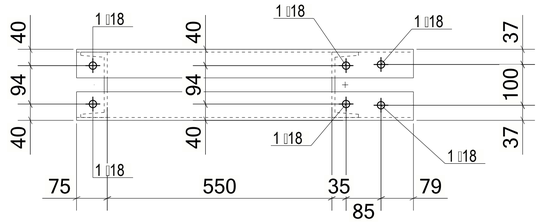

A - A

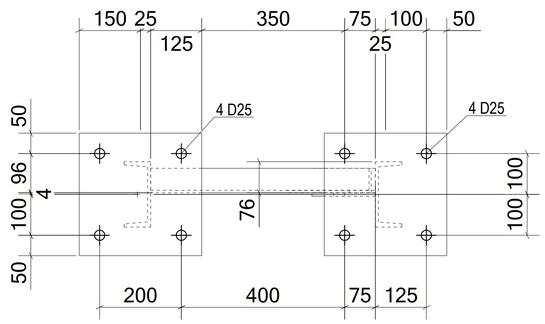

D - D

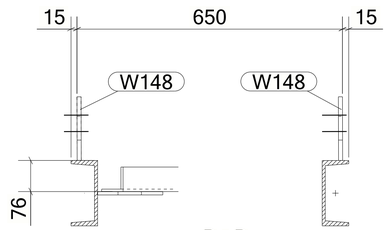

B - B

MATERIAL LIST FOR ASSEMBLY MK'D **Z8-FR029**

Mark	Profile	GRADE	No.	Length	Area	Weight
Z8-FR029	UPN160	S235JR	1	2268	1.25	42.73
W103	L60*6	S235JR	1	550	0.13	2.95
W104	L70*7	S235JR	1	825	0.23	6.03
W106	L60*6	S235JR	1	1034	0.25	5.55
W111	L70*7	S235JR	1	825	0.23	6.03
W114	PL8*166.7	S355JR	1	233	0.05	1.53
W115	PL8*155.4	S355JR	1	292	0.07	2.14
W118	PL25*300	S355JR	2	300	0.21	17.66
W123	UPN160	S235JR	1	2268	1.25	42.73
W124	L60*6	S235JR	1	514	0.12	2.76
W125	L60*6	S235JR	1	982	0.24	5.27
W126	PL8*225.5	S355JR	1	611	0.24	7.26
W127	PL8*159.7	S355JR	1	226	0.05	1.54
W148	PL10*156	S355JR	2	160	0.04	1.44
				Total	4.64	164.74

BOLT LIST:-

BOLT \ STUD	BOLT DESCRIPTION	QTY	FINISH

1 *REQUIRED AS DRAWN MARKED* **Z8-FR029**

6 October Monorail
Engineering Unit
Valid For Construction

GENERAL NOTES:

1. THE DIMENSIONS SHOWN ARE NOMINAL (IN MILLIMETERS), U.N.O.
2. WELD SIZESHALL BE AISC MINIMUM OF 6 mm UNLESS NOTED OTHERWISE.
3. ALL FIELD WELDS SHALL BE INSPECTED PER QUALITY ASSURANCE AND SPECIAL INSPECTIONS.

REFERENCE DRAWINGS

1	93M-BOA-NAT-LOT-04833
2	93M-BOA-NAT-LOT-09170
3	93M-BOA-NAT-LOT-01976
4	93M-BOA-NAT-LOT-20021
5	
6	
7	
8	
9	

6TH OF OCTOBER CITY RAIL TRANSIT MONORAIL

The Authority | Consultant: Hill International | Main Contractor: ORASCOM CONSTRUCTION / BOMBARDIER | Structural Designer: INNOVA TRANSPORTATION

KEY PLAN:

SCALE: AS SHOWN | SHOPDRAWING | DATE: 12/05/2023

REV	DATE	DSG.	CHK.	APP.	AMENDMENTS	STATUS
B	12/05/2023	M.KH	M.KH	DR.M.M	ISSUED FOR INFORMATION	IFI
A	11/20/2022	M.KH	M.KH	DR.M.M	ISSUED FOR INFORMATION	IFI

DRAWING TITLE
6TH OF OCTOBER MONORAIL
SERVICE WALKWAYS
ZONE (1008)
Z8-FR029

Project Code	Rubric	Initiator	Lot	Ref	Number	Revision
93M	047	6ACC	60DEP	DWG	08207	B

Tekla structures

Same comments as
93M-0476-ACC-60DEP-DWG-08180-B.

REVIEWED WITH COMMENT MONORAILS PROJECT

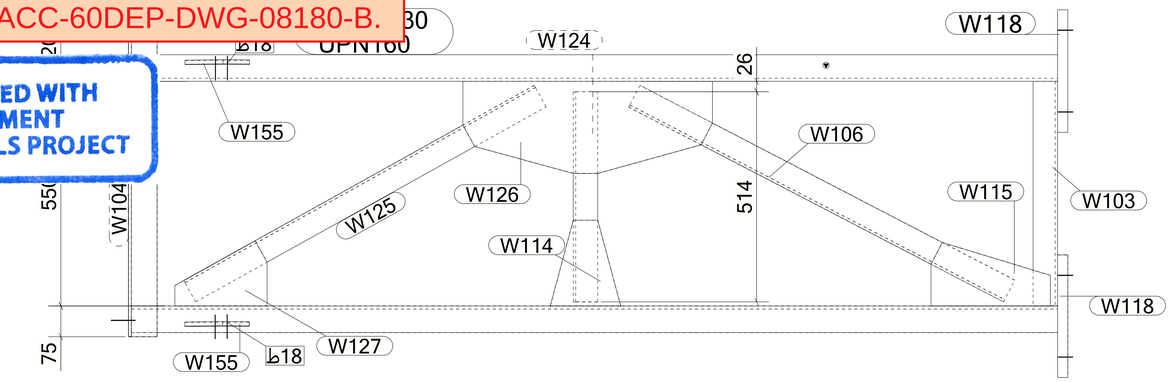

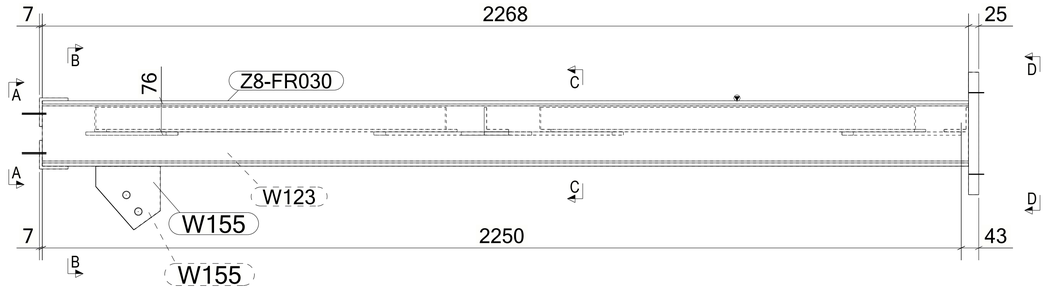

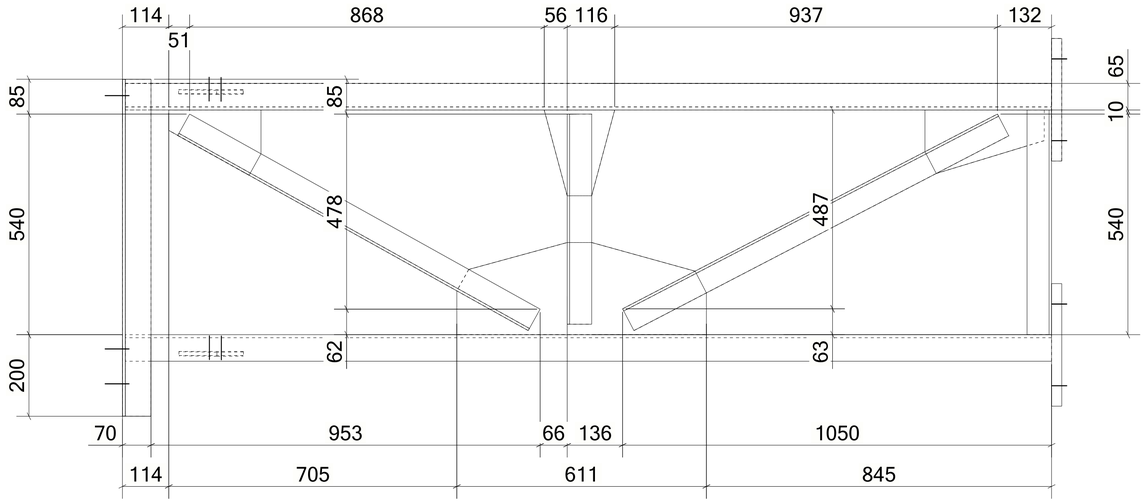

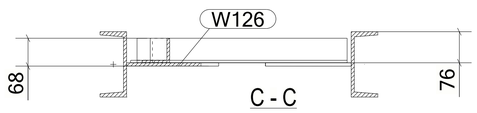

C - C

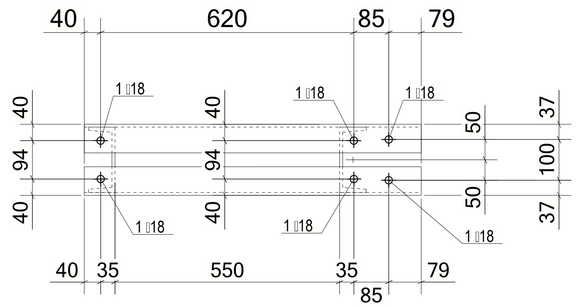

A - A

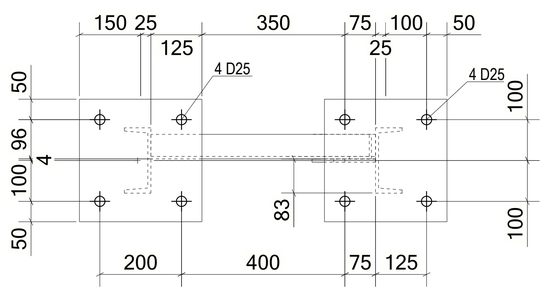

D - D

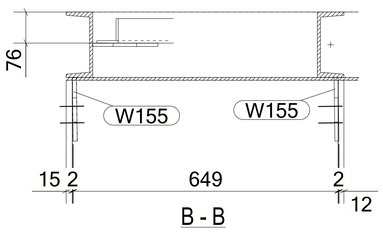

B - B

MATERIAL LIST FOR ASSEMBLY MK'D **Z8-FR030**

Mark	Profile	GRADE	No.	Length	Area	Weight
Z8-FR030	UPN160	S235JR	1	2268	1.25	42.73
W103	L60*6	S235JR	1	550	0.13	2.95
W104	L70*7	S235JR	1	825	0.23	6.03
W106	L60*6	S235JR	1	1034	0.25	5.55
W111	L70*7	S235JR	1	825	0.23	6.03
W114	PL8*166.7	S355JR	1	233	0.05	1.53
W115	PL8*155.4	S355JR	1	292	0.07	2.14
W118	PL25*300	S355JR	2	300	0.21	17.66
W123	UPN160	S235JR	1	2268	1.25	42.73
W124	L60*6	S235JR	1	514	0.12	2.76
W125	L60*6	S235JR	1	982	0.24	5.27
W126	PL8*225.5	S355JR	1	611	0.24	7.26
W127	PL8*159.7	S355JR	1	226	0.05	1.54
W155	PL10*155.9	S355JR	2	158	0.04	1.43
				Total	4.64	164.71

BOLT LIST:-

BOLT \ STUD	BOLT DESCRIPTION	QTY	FINISH

1 *REQUIRED AS DRAWN MARKED* **Z8-FR030**

6 October Monorail
Engineering Unit
Valid For Construction

GENERAL NOTES:

1. THE DIMENSIONS SHOWN ARE NOMINAL (IN MILLIMETERS), U.N.O.
2. WELD SIZESHALL BE AISC MINIMUM OF 6 mm UNLESS NOTED OTHERWISE.
3. ALL FIELD WELDS SHALL BE INSPECTED PER QUALITY ASSURANCE AND SPECIAL INSPECTIONS.

REFERENCE DRAWINGS

1	93M-BOA-NAT-LOT-04833
2	93M-BOA-NAT-LOT-09170
3	93M-BOA-NAT-LOT-01976
4	93M-BOA-NAT-LOT-20021
5	
6	
7	
8	
9	

6TH OF OCTOBER CITY RAIL TRANSIT MONORAIL

The Authority | Hill International Consultant | ORASCOM BOMBARDIER Main Contractor | INNOVA Structural Designer

KEY PLAN:

SCALE	SHOPDRAWING	DATE
AS SHOWN		12/05/2023

REV	DATE	DSG.	CHK.	APP.	AMENDMENTS	STATUS
B	12/05/2023	M.KH	M.KH	DR.M.M	ISSUED FOR INFORMATION	IFI
A	11/20/2022	M.KH	M.KH	DR.M.M	ISSUED FOR INFORMATION	IFI

DRAWING TITLE
6TH OF OCTOBER MONORAIL
SERVICE WALKWAYS
ZONE (1008)
Z8-FR030

Project Code	Rubric	Initiator	Lot	Ref	Number	Revision
93M	0476	ACC	60DEP	DWG	08208	B

Tekla structures

Same comments as 93M-0476-ACC-60DEP-DWG-08180-B.

REVIEWED WITH COMMENT MONORAILS PROJECT

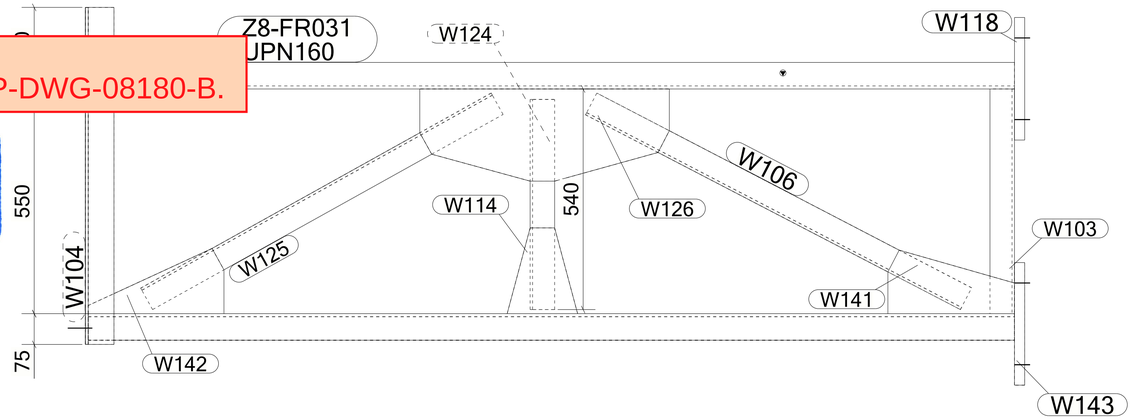

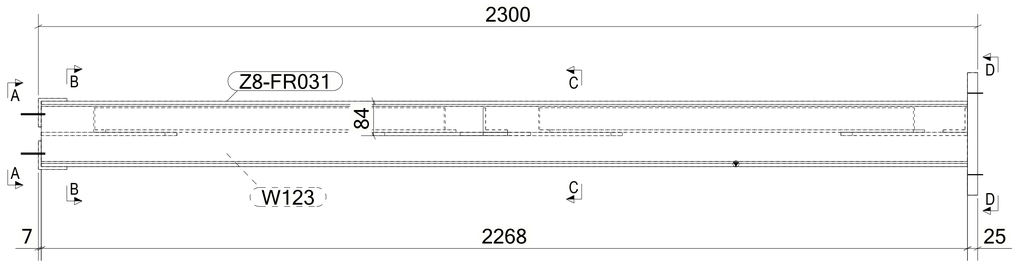

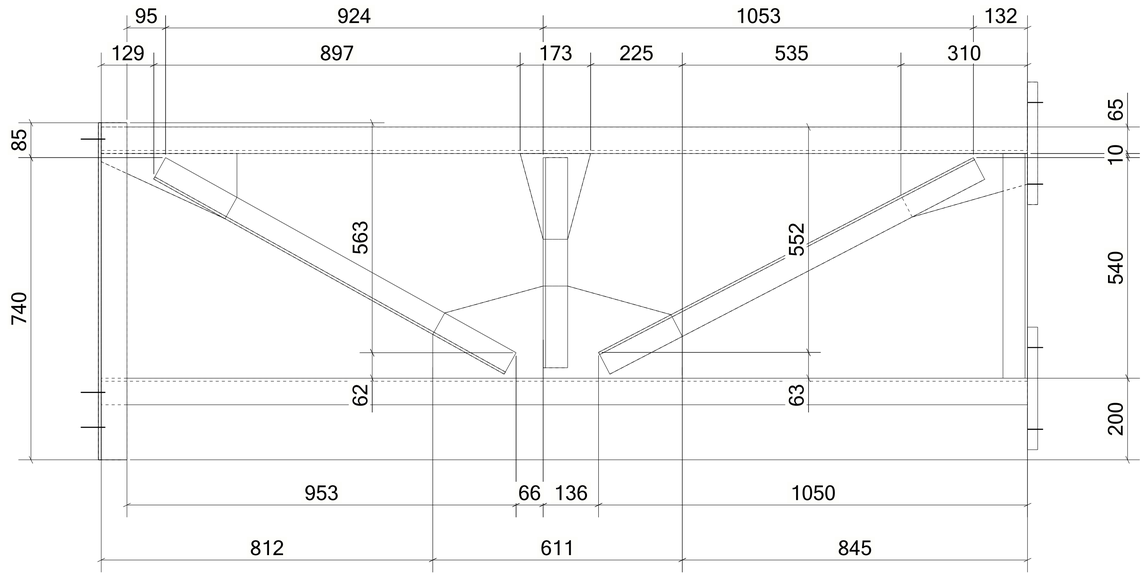

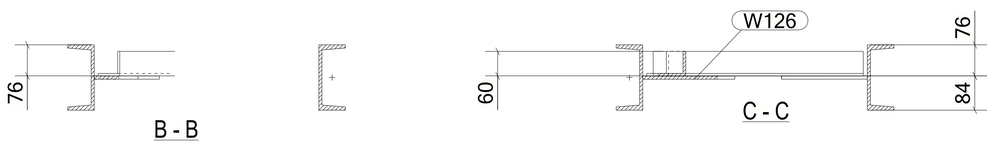

B - B

C - C

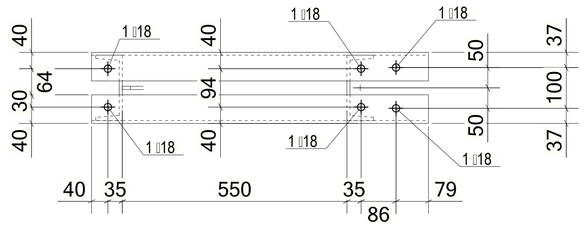

A - A

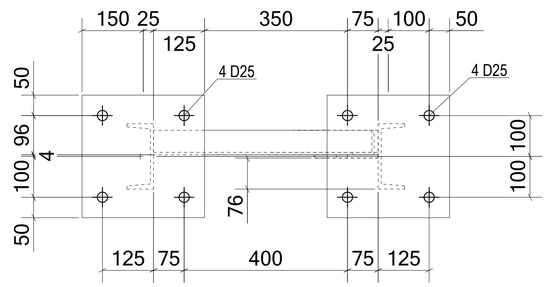

D - D

MATERIAL LIST FOR ASSEMBLY MK'D **Z8-FR031**

Mark	Profile	GRADE	No.	Length	Area	Weight
Z8-FR031	UPN160	S235JR	1	2268	1.25	42.73
W103	L60*6	S235JR	1	550	0.13	2.95
W104	L70*7	S235JR	1	825	0.23	6.03
W106	L60*6	S235JR	1	1034	0.25	5.55
W111	L70*7	S235JR	1	825	0.23	6.03
W114	PL8*166.7	S355JR	1	233	0.05	1.53
W118	PL25*300	S355JR	1	300	0.21	17.66
W123	UPN160	S235JR	1	2268	1.25	42.73
W124	L60*6	S235JR	1	514	0.12	2.76
W125	L60*6	S235JR	1	982	0.24	5.27
W126	PL8*225.6	S355JR	1	611	0.24	7.26
W141	PL8*155.4	S355JR	1	310	0.08	2.27
W142	PL8*159.7	S355JR	1	332	0.07	1.95
W143	PL25*300	S355JR	1	300	0.21	17.66
				Total	4.57	162.40

BOLT LIST:-

BOLT \ STUD	BOLT DESCRIPTION	QTY	FINISH

12 *REQUIRED AS DRAWN MARKED* **Z8-FR031**

GENERAL NOTES:

1. THE DIMENSIONS SHOWN ARE NOMINAL (IN MILLIMETERS), U.N.O.
2. WELD SIZESHALL BE AISC MINIMUM OF 6 mm UNLESS NOTED OTHERWISE.
3. ALL FIELD WELDS SHALL BE INSPECTED PER QUALITY ASSURANCE AND SPECIAL INSPECTIONS.

REFERENCE DRAWINGS

1	93M-BOA-NAT-LOT-04833
2	93M-BOA-NAT-LOT-09170
3	93M-BOA-NAT-LOT-01976
4	93M-BOA-NAT-LOT-20021
5	
6	
7	
8	
9	

6TH OF OCTOBER CITY RAIL TRANSIT MONORAIL

The Authority | Hill International Consultant | Main Contractor | Structural Designer

KEY PLAN:

6 October Monorail Engineering Unit Valid For Construction

SCALE	SHOPDRAWING	DATE
AS SHOWN		12/05/2023

REV	DATE	DSG.	CHK.	APP.	AMENDMENTS	STATUS
B	12/05/2023	M.KH	M.KH	DR.M.M	ISSUED FOR INFORMATION	IFI
A	11/20/2022	M.KH	M.KH	DR.M.M	ISSUED FOR INFORMATION	IFI

DRAWING TITLE
6TH OF OCTOBER MONORAIL
SERVICE WALKWAYS
ZONE (1008)
Z8-FR031

Project Code	Rubric	Initiator	Lot	Ref	Number	Revision
93	M047	6ACC	60DE	PDWG	08209	B

Tekla structures

Same comments as 93M-0476-ACC-60DEP-DWG-08180-B.

REVIEWED WITH COMMENT MONORAILS PROJECT

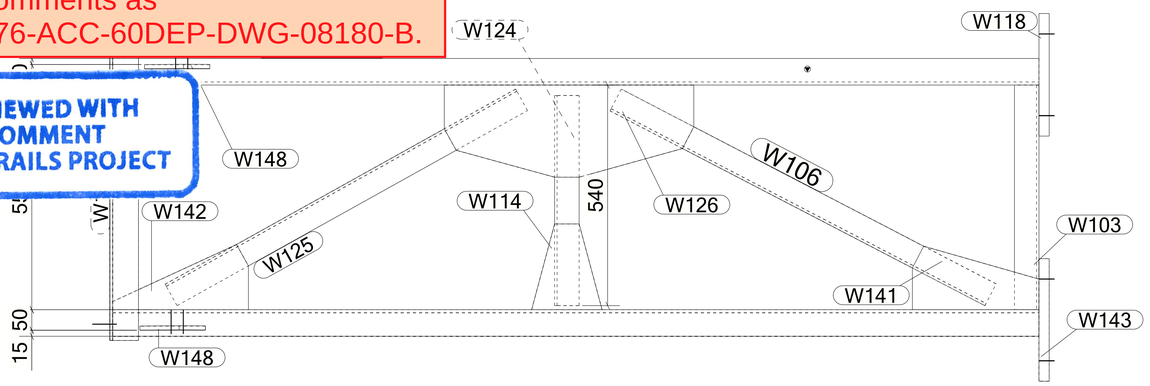

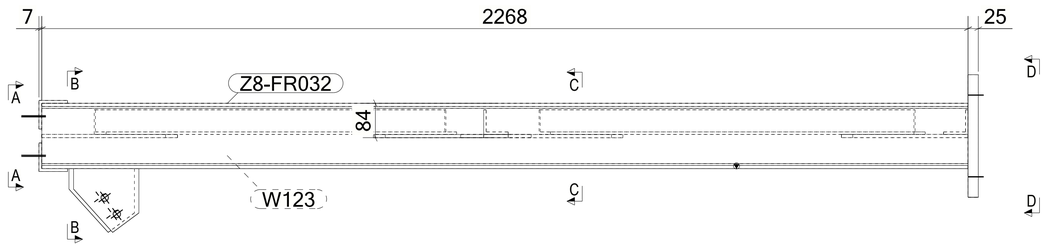

MATERIAL LIST FOR ASSEMBLY MK'D **Z8-FR032**

Mark	Profile	GRADE	No.	Length	Area	Weight
Z8-FR032	UPN160	S235JR	1	2268	1.25	42.73
W103	L60*6	S235JR	1	550	0.13	2.95
W104	L70*7	S235JR	1	825	0.23	6.03
W106	L60*6	S235JR	1	1034	0.25	5.55
W111	L70*7	S235JR	1	825	0.23	6.03
W114	PL8*166.7	S355JR	1	233	0.05	1.53
W118	PL25*300	S355JR	1	300	0.21	17.66
W123	UPN160	S235JR	1	2268	1.25	42.73
W124	L60*6	S235JR	1	514	0.12	2.76
W125	L60*6	S235JR	1	982	0.24	5.27
W126	PL8*225.6	S355JR	1	611	0.24	7.26
W141	PL8*155.4	S355JR	1	310	0.08	2.27
W142	PL8*159.7	S355JR	1	332	0.07	1.95
W143	PL25*300	S355JR	1	300	0.21	17.66
W148	PL10*156	S355JR	2	160	0.04	1.44
				Total	4.66	165.29

BOLT LIST:-

BOLT \ STUD	BOLT DESCRIPTION	QTY	FINISH

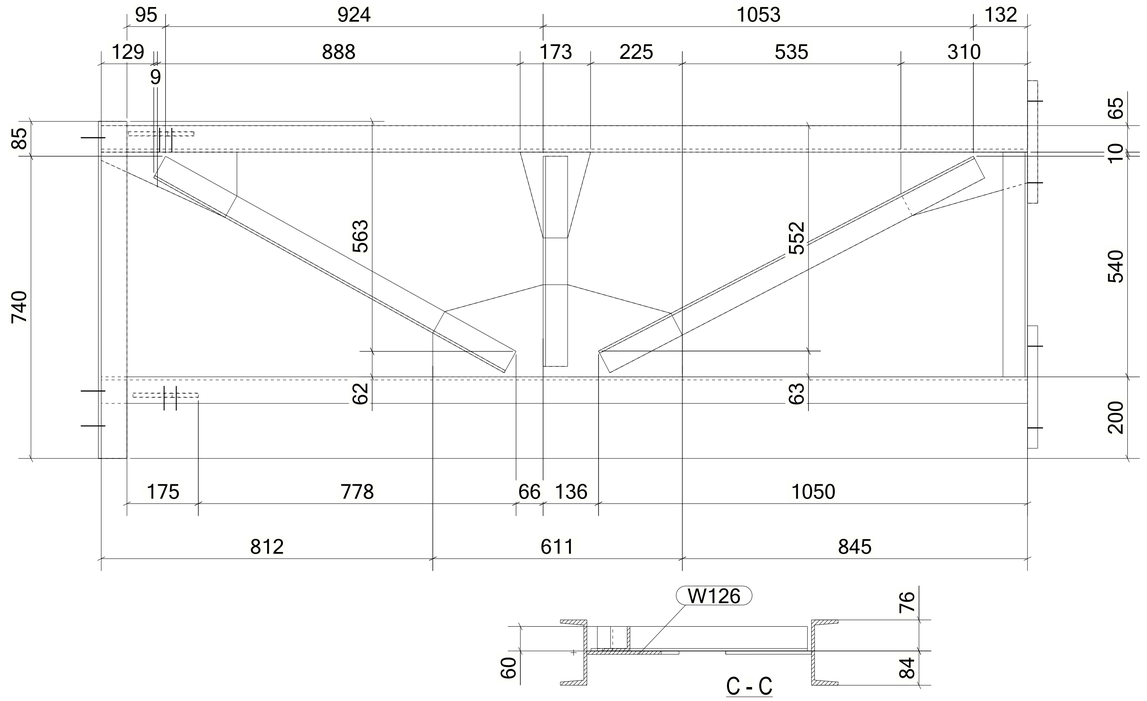

C - C

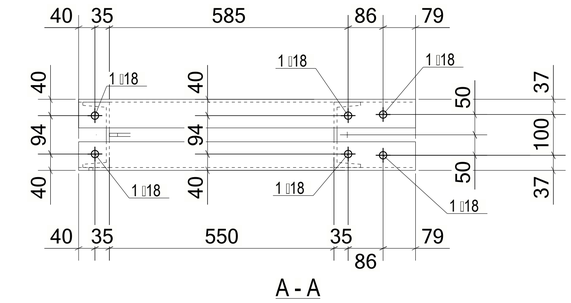

A - A

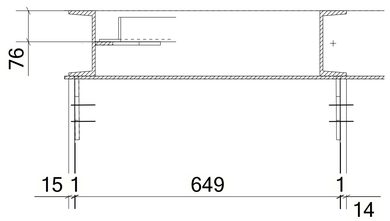

B - B

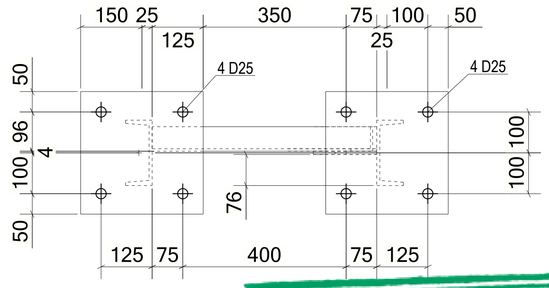

D - D

1 *REQUIRED AS DRAWN MARKED* **Z8-FR032**

6 October Monorail
Engineering Unit
Valid For Construction

GENERAL NOTES:

1. THE DIMENSIONS SHOWN ARE NOMINAL (IN MILLIMETERS), U.N.O.
2. WELD SIZESHALL BE AISC MINIMUM OF 6 mm UNLESS NOTED OTHERWISE.
3. ALL FIELD WELDS SHALL BE INSPECTED PER QUALITY ASSURANCE AND SPECIAL INSPECTIONS.

REFERENCE DRAWINGS

1	93M-BOA-NAT-LOT-04833
2	93M-BOA-NAT-LOT-09170
3	93M-BOA-NAT-LOT-01976
4	93M-BOA-NAT-LOT-20021
5	
6	
7	
8	
9	

6TH OF OCTOBER CITY RAIL TRANSIT MONORAIL

The Authority | Consultant: Hill International | Main Contractor: ORASCOM CONSTRUCTION / BOMBARDIER | Structural Designer: INNOVA TRANSPORTATION

KEY PLAN:

SCALE: AS SHOWN | SHOPDRAWING | DATE: 12/05/2023

REV	DATE	DSG.	CHK.	APP.	AMENDMENTS	STATUS
B	12/05/2023	M.KH	M.KH	DR.M.M	ISSUED FOR INFORMATION	IFI
A	11/20/2022	M.KH	M.KH	DR.M.M	ISSUED FOR INFORMATION	IFI

DRAWING TITLE
6TH OF OCTOBER MONORAIL
SERVICE WALKWAYS
ZONE (1008)
Z8-FR032

Project Code	Rubric	Initiator	Lot	Ref	Number	Revision
93M	0476	ACC	60DEP	DWG	08210	B

Tekla structures

Same comments as
93M-0476-ACC-60DEP-DWG-08180-B.

REVIEWED WITH COMMENT
MONORAILS PROJECT

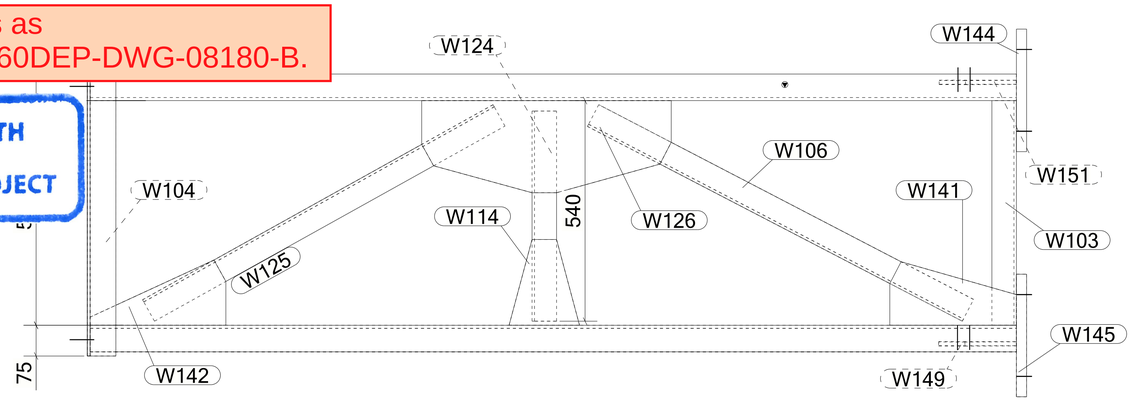

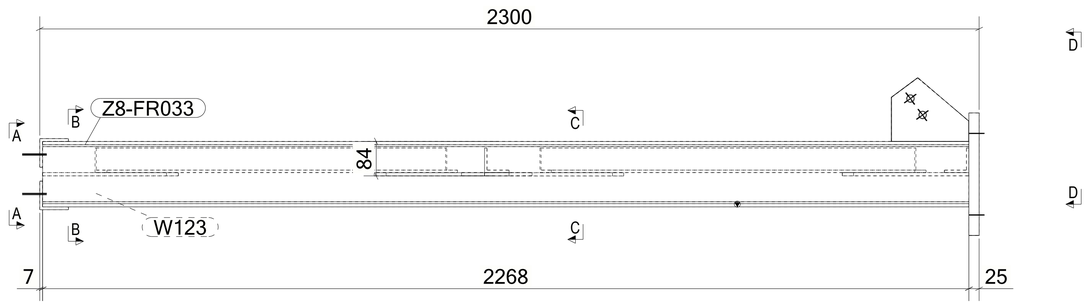

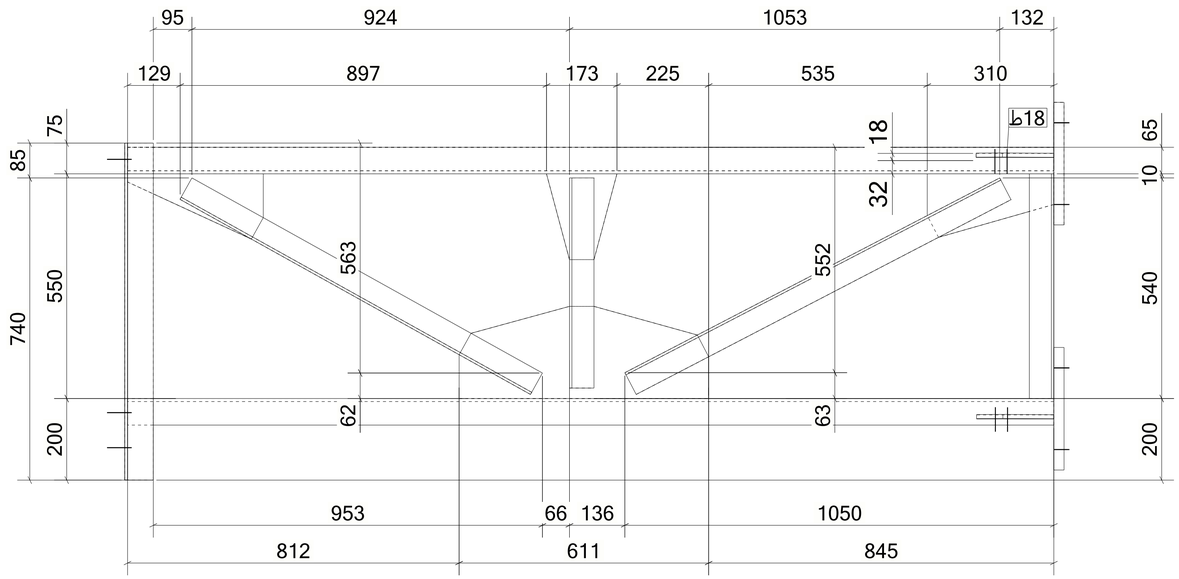

MATERIAL LIST FOR ASSEMBLY MK'D **Z8-FR033**

Mark	Profile	GRADE	No.	Length	Area	Weight
Z8-FR033	UPN160	S235JR	1	2268	1.25	42.73
W103	L60*6	S235JR	1	550	0.13	2.95
W104	L70*7	S235JR	1	825	0.23	6.03
W106	L60*6	S235JR	1	1034	0.25	5.55
W111	L70*7	S235JR	1	825	0.23	6.03
W114	PL8*166.7	S355JR	1	233	0.05	1.53
W123	UPN160	S235JR	1	2268	1.25	42.73
W124	L60*6	S235JR	1	514	0.12	2.76
W125	L60*6	S235JR	1	982	0.24	5.27
W126	PL8*225.6	S355JR	1	611	0.24	7.26
W141	PL8*155.4	S355JR	1	310	0.08	2.27
W142	PL8*159.7	S355JR	1	332	0.07	1.95
W144	PL25*300	S355JR	1	300	0.21	17.66
W145	PL25*300	S355JR	1	300	0.21	17.66
W149	PL10*156	S355JR	1	190	0.05	1.68
W151	PL10*156	S355JR	1	188	0.05	1.67
				Total	4.67	165.76

BOLT LIST:-

BOLT \ STUD	BOLT DESCRIPTION	QTY	FINISH

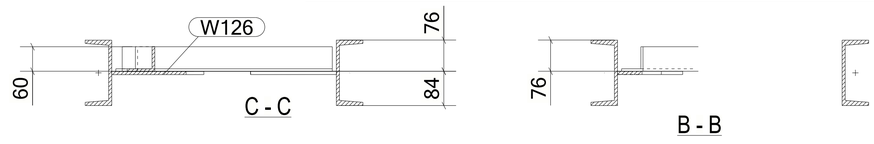

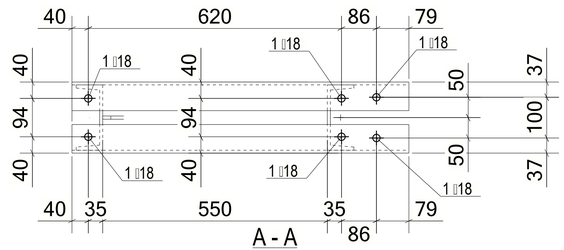

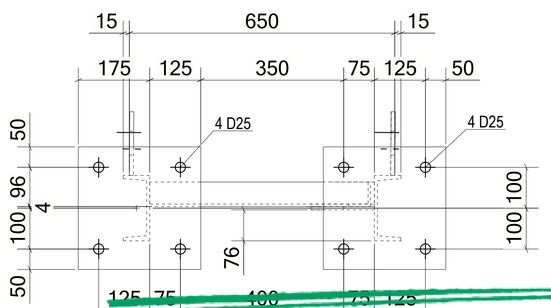

1 *REQUIRED AS DRAWN MARKED* **Z8-FR033**

GENERAL NOTES:

1. THE DIMENSIONS SHOWN ARE NOMINAL (IN MILLIMETERS), U.N.O.
2. WELD SIZESHALL BE AISC MINIMUM OF 6 mm UNLESS NOTED OTHERWISE.
3. ALL FIELD WELDS SHALL BE INSPECTED PER QUALITY ASSURANCE AND SPECIAL INSPECTIONS.

REFERENCE DRAWINGS

1	93M-BOA-NAT-LOT-04833
2	93M-BOA-NAT-LOT-09170
3	93M-BOA-NAT-LOT-01976
4	93M-BOA-NAT-LOT-20021
5	
6	
7	
8	
9	

6TH OF OCTOBER CITY RAIL TRANSIT MONORAIL

The Authority — Hill International (Consultant) — Main Contractor — Structural Designer

KEY PLAN:

6 October Monorail
Engineering Unit
Valid For Construction

SCALE	SHOPDRAWING	DATE
AS SHOWN		12/05/2023

REV	DATE	DSG.	CHK.	APP.	AMENDMENTS	STATUS
B	12/05/2023	M.KH	M.KH	DR.M.M	ISSUED FOR INFORMATION	IFI
A	11/20/2022	M.KH	M.KH	DR.M.M	ISSUED FOR INFORMATION	IFI

DRAWING TITLE
6TH OF OCTOBER MONORAIL
SERVICE WALKWAYS
ZONE (1008)
Z8-FR033

Project Code	Rubric	Initiator	Lot	Ref	Number	Revision
93M	0476	ACC	60	DEP	DWG0821	B

Tekla structures

Same comments as
93M-0476-ACC-60DEP-DWG-08180-B.

REVIEWED WITH COMMENT
MONORAILS PROJECT

MATERIAL LIST FOR ASSEMBLY MK'D **Z8-FR034**

Mark	Profile	GRADE	No.	Length	Area	Weight
Z8-FR034	UPN160	S235JR	1	591	0.33	11.14
W275	UPN160	S235JR	1	591	0.33	11.14
W310	L70*7	S235JR	1	750	0.21	5.48
W311	L60*6	S235JR	1	600	0.15	3.22
W312	L70*7	S235JR	1	750	0.21	5.48
W316	PL25*300	S355JR	2	300	0.21	17.66
W841	L60*6	S235JR	1	686	0.17	3.68
W842	PL8*183.9	S355-JR	1	208	0.06	1.79
W843	PL8*208	S355-JR	1	216	0.07	1.92
				Total	1.93	79.18

BOLT LIST:-

BOLT \ STUD	BOLT DESCRIPTION	QTY	FINISH

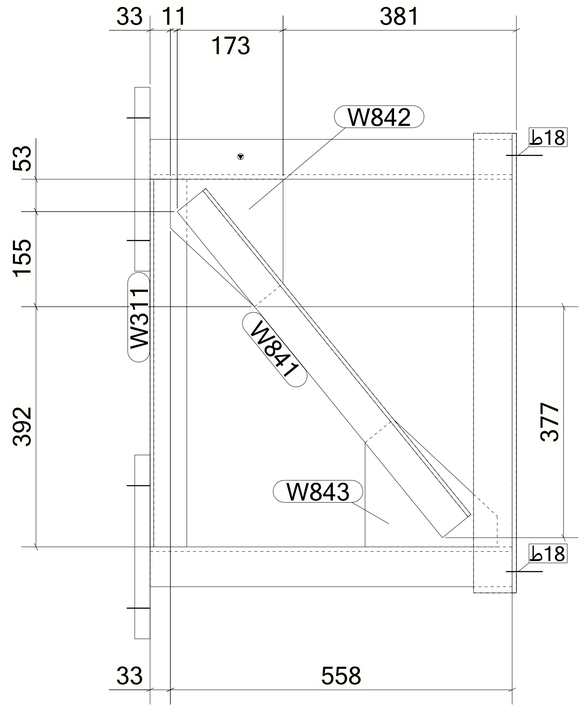

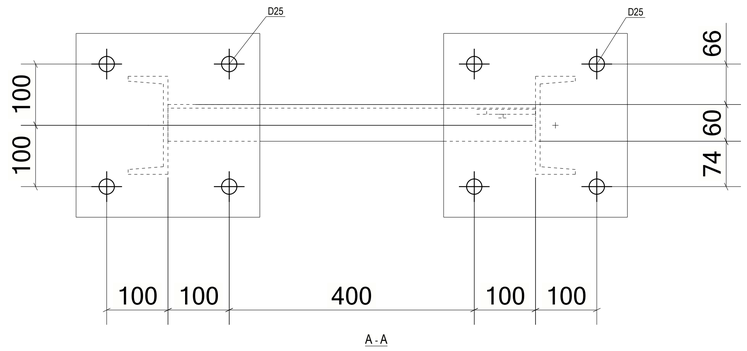

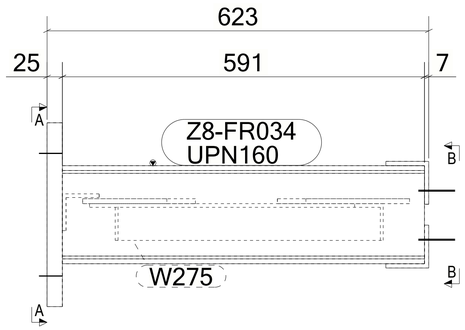

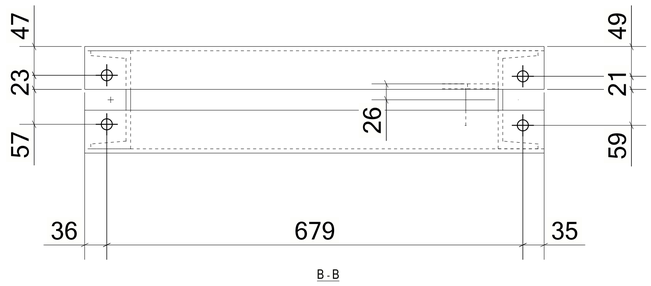

1 *REQUIRED AS DRAWN MARKED* **Z8-FR034**

GENERAL NOTES:

1. THE DIMENSIONS SHOWN ARE NOMINAL (IN MILLIMETERS), U.N.O.
2. WELD SIZESHALL BE AISC MINIMUM OF 6 mm UNLESS NOTED OTHERWISE.
3. ALL FIELD WELDS SHALL BE INSPECTED PER QUALITY ASSURANCE AND SPECIAL INSPECTIONS.

REFERENCE DRAWINGS

1	93M-BOA-NAT-LOT-04833
2	93M-BOA-NAT-LOT-09170
3	93M-BOA-NAT-LOT-01976
4	93M-BOA-NAT-LOT-20021
5	
6	
7	
8	
9	

6TH OF OCTOBER CITY RAIL TRANSIT MONORAIL

The Authority | Consultant: Hill International | Main Contractor: ORASCOM CONSTRUCTION / BOMBARDIER | Structural Designer: INNOVA TRANSPORTATION

KEY PLAN:

6 October Monorail
Engineering Unit
Valid For Construction

SCALE: AS SHOWN | SHOPDRAWING | DATE: 12/05/2023

REV	DATE	DSG.	CHK.	APP.	AMENDMENTS	STATUS
B	12/05/2023	M.KH	M.KH	DR.M.M	ISSUED FOR INFORMATION	IFI
A	11/20/2022	M.KH	M.KH	DR.M.M	ISSUED FOR INFORMATION	IFI

DRAWING TITLE
6TH OF OCTOBER MONORAIL
SERVICE WALKWAYS
ZONE (1008)
Z8-FR034

Project Code	Rubric	Initiator	Lot	Ref	Number	Revision
93M	047	6ACC	60DEP	DWG	08212	B

Tekla structures

Same comments as
93M-0476-ACC-60DEP-DWG-08180-B.

REVIEWED WITH COMMENT MONORAILS PROJECT

MATERIAL LIST FOR ASSEMBLY MK'D **Z8-FR035**

Mark	Profile	GRADE	No.	Length	Area	Weight
Z8-FR035	UPN160	S235JR	1	592	0.33	11.15
W333	UPN160	S235JR	1	592	0.33	11.15
W421	L70*7	S235JR	1	1160	0.33	8.48
W422	L60*6	S235JR	1	1000	0.24	5.37
W423	L70*7	S235JR	1	1160	0.33	8.48
W424	L60*6	S235JR	1	1052	0.25	5.65
W497	PL25*300	S355JR	1	300	0.21	17.66
W498	PL8*188.3	S355JR	1	221	0.06	1.85
W524	PL25*300	S355JR	1	300	0.21	17.66
W525	PL8*169.3	S355JR	1	221	0.06	1.68
				Total	2.34	89.14

BOLT LIST:-

BOLT \ STUD	BOLT DESCRIPTION	QTY	FINISH
BOLT	B1N2W 16 X 50 A325M	4	

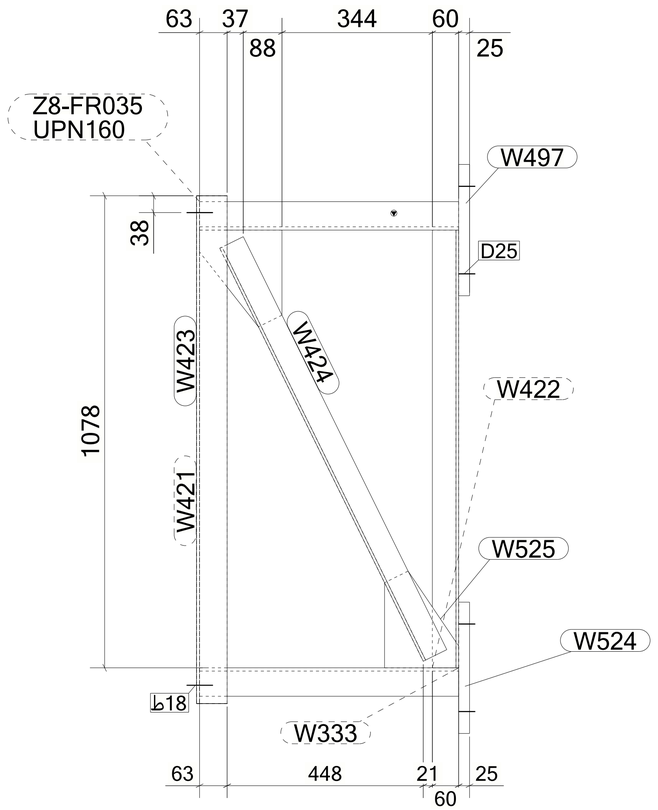

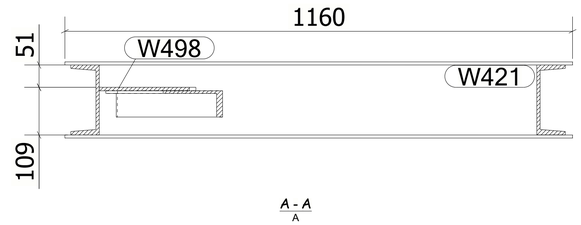

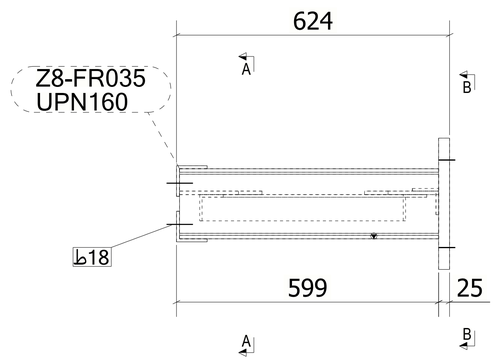

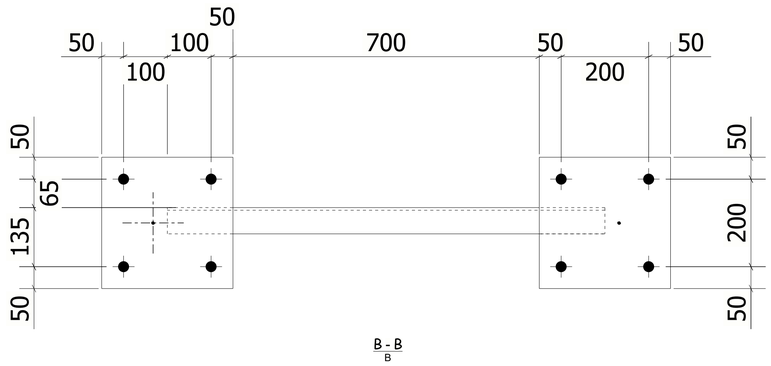

1 *REQUIRED AS DRAWN MARKED* **Z8-FR035**

6 October Monorail
Engineering Unit
Valid For Construction

GENERAL NOTES:

1. THE DIMENSIONS SHOWN ARE NOMINAL (IN MILLIMETERS), U.N.O.
2. WELD SIZESHALL BE AISC MINIMUM OF 6 mm UNLESS NOTED OTHERWISE.
3. ALL FIELD WELDS SHALL BE INSPECTED PER QUALITY ASSURANCE AND SPECIAL INSPECTIONS.

REFERENCE DRAWINGS

1	93M-BOA-NAT-LOT-04833
2	93M-BOA-NAT-LOT-09170
3	93M-BOA-NAT-LOT-01976
4	93M-BOA-NAT-LOT-20021
5	
6	
7	
8	
9	

6TH OF OCTOBER CITY RAIL TRANSIT MONORAIL

The Authority | Hill International Consultant | ORASCOM BOMBARDIER Main Contractor | INNOVA Structural Designer

KEY PLAN:

SCALE	SHOPDRAWING	DATE
AS SHOWN		12/05/2023

REV	DATE	DSG.	CHK.	APP.	AMENDMENTS	STATUS
B	12/05/2023	M.KH	M.KH	DR.M.M	ISSUED FOR INFORMATION	IFI
A	11/20/2022	M.KH	M.KH	DR.M.M	ISSUED FOR INFORMATION	IFI

DRAWING TITLE
6TH OF OCTOBER MONORAIL
SERVICE WALKWAYS
ZONE (1008)
Z8-FR035

Project Code	Rubric	Initiator	Lot	Ref	Number	Revision
93M	0476	ACC	60DEP	DWG	08213	B

Tekla structures

Same comments as
93M-0476-ACC-60DEP-DWG-08180-B.

REVIEWED WITH COMMENT
MONORAILS PROJECT

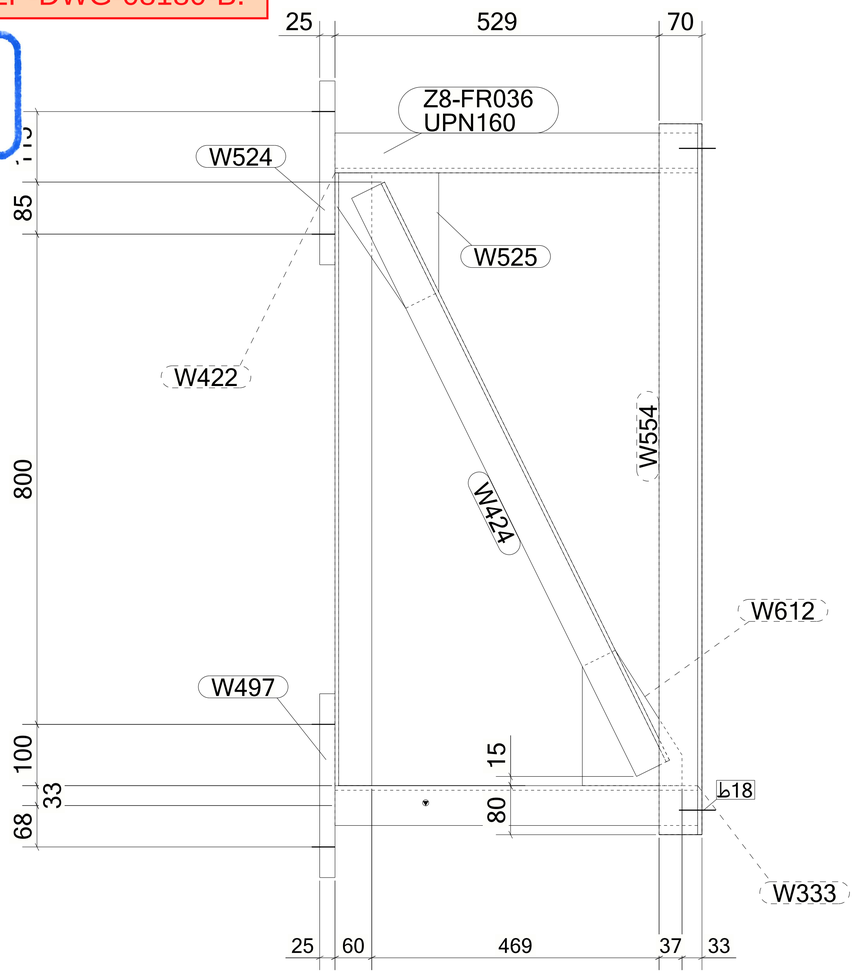

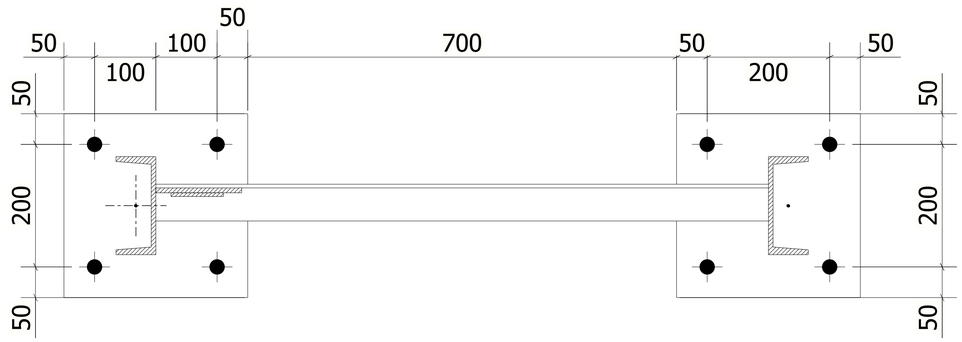

B - B
B

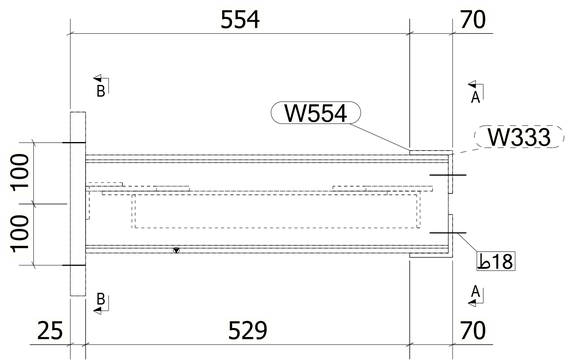

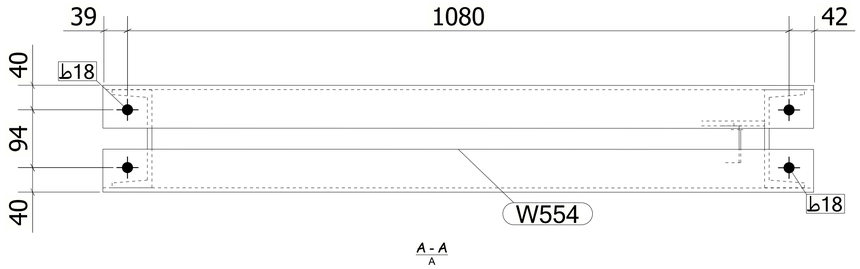

A - A
A

MATERIAL LIST FOR ASSEMBLY MK'D **Z8-FR036**

Mark	Profile	GRADE	No.	Length	Area	Weight
Z8-FR036	UPN160	S235JR	1	592	0.33	11.15
W333	UPN160	S235JR	1	592	0.33	11.15
W422	L60*6	S235JR	1	1000	0.24	5.37
W424	L60*6	S235JR	1	1052	0.25	5.65
W497	PL25*300	S355JR	1	300	0.21	17.66
W524	PL25*300	S355JR	1	300	0.21	17.66
W525	PL8*169.3	S355JR	1	221	0.06	1.68
W554	L70*7	S235JR	2	1160	0.33	8.48
W612	PL8*162.7	S355-JR	1	221	0.06	1.63
				Total	2.34	88.92

BOLT LIST:-

BOLT \ STUD	BOLT DESCRIPTION		QTY	FINISH
BOLT	B1N2W 16 X 50	A325M	4	

1 *REQUIRED AS DRAWN MARKED* **Z8-FR036**

6 October Monorail
Engineering Unit
Valid For Construction

GENERAL NOTES:

1. THE DIMENSIONS SHOWN ARE NOMINAL (IN MILLIMETERS), U.N.O.
2. WELD SIZESHALL BE AISC MINIMUM OF 6 mm UNLESS NOTED OTHERWISE.
3. ALL FIELD WELDS SHALL BE INSPECTED PER QUALITY ASSURANCE AND SPECIAL INSPECTIONS.

REFERENCE DRAWINGS

1	93M-BOA-NAT-LOT-04833
2	93M-BOA-NAT-LOT-09170
3	93M-BOA-NAT-LOT-01976
4	93M-BOA-NAT-LOT-20021
5	
6	
7	
8	
9	

6TH OF OCTOBER CITY RAIL TRANSIT MONORAIL

The Authority | Hill International Consultant | Main Contractor | Structural Designer

KEY PLAN:

SCALE	SHOPDRAWING	DATE
AS SHOWN		12/05/2023

REV	DATE	DSG.	CHK.	APP.	AMENDMENTS	STATUS
B	12/05/2023	MAH	MAH	DR.M.M	ISSUED FOR INFORMATION	IFI
A	11/20/2022	MAH	MAH	DR.M.M	ISSUED FOR INFORMATION	IFI

DRAWING TITLE
6TH OF OCTOBER MONORAIL
SERVICE WALKWAYS
ZONE (1008)
Z8-FR036

Project Code	Rubric	Initiator	Lot	Ref	Number	Revision
93M	0476	ACC	60DEP	DWG	08214	B

Tekla structures

Same comments as
93M-0476-ACC-60DEP-DWG-08180-B.

REVIEWED WITH COMMENT
MONORAILS PROJECT

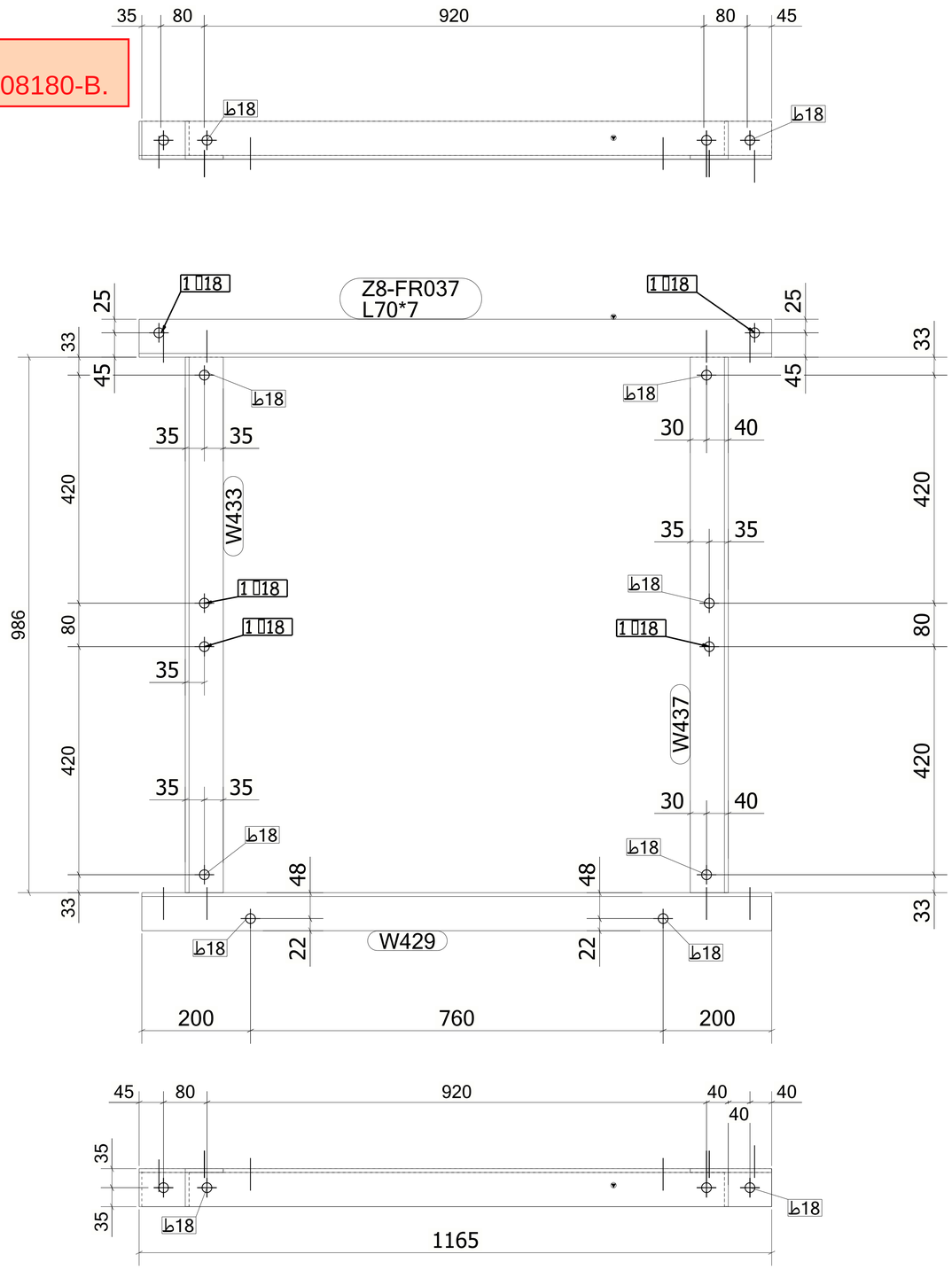

MATERIAL LIST FOR ASSEMBLY MK'D **Z8-FR037**

Mark	Profile	GRADE	No.	Length	Area	Weight
Z8-FR037	L70*7	S235JR	1	1165	0.33	8.51
W429	L70*7	S235JR	1	1160	0.33	8.48
W433	L70*7	S235JR	1	986	0.28	7.21
W437	L70*7	S235JR	1	986	0.28	7.21
				Total	1.21	31.40

BOLT LIST:-

BOLT \ STUD	BOLT DESCRIPTION	QTY	FINISH
BOLT	B1N2W 16 X 50 A325M	10	

1 *REQUIRED AS DRAWN MARKED* **Z8-FR037**

GENERAL NOTES:

1. THE DIMENSIONS SHOWN ARE NOMINAL (IN MILLIMETERS), U.N.O.
2. WELD SIZESHALL BE AISC MINIMUM OF 6 mm UNLESS NOTED OTHERWISE.
3. ALL FIELD WELDS SHALL BE INSPECTED PER QUALITY ASSURANCE AND SPECIAL INSPECTIONS.

REFERENCE DRAWINGS

1	93M-BOA-NAT-LOT-04833
2	93M-BOA-NAT-LOT-09170
3	93M-BOA-NAT-LOT-01976
4	93M-BOA-NAT-LOT-20021
5	
6	
7	
8	
9	

6TH OF OCTOBER CITY RAIL TRANSIT MONORAIL

The Authority | Hill International Consultant | Main Contractor | Structural Designer

KEY PLAN:

6 October Monorail
Engineering Unit
Valid For Construction

SCALE: AS SHOWN | SHOPDRAWING | DATE: 12/05/2023

REV	DATE	DSG.	CHK.	APP.	AMENDMENTS	STATUS
B	12/05/2023	M.KH	M.KH	DR.M.M	ISSUED FOR INFORMATION	IFI
A	11/20/2022	M.KH	M.KH	DR.M.M	ISSUED FOR INFORMATION	IFI

DRAWING TITLE
6TH OF OCTOBER MONORAIL
SERVICE WALKWAYS
ZONE (1008)
Z8-FR037

Project Code	Rubric	Initiator	Lot	Ref	Number	Revision
93M0476	ACC	60DEP	DWG	08215		B

Tekla structures

Same comments as
93M-0476-ACC-60DEP-DWG-08180-B.

REVIEWED WITH COMMENT
MONORAILS PROJECT

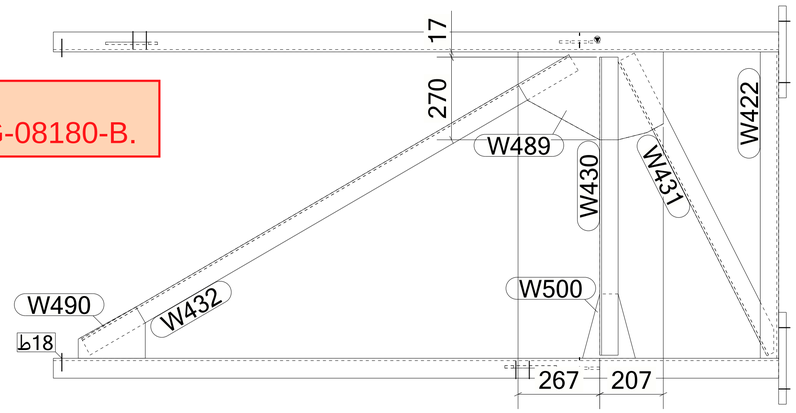

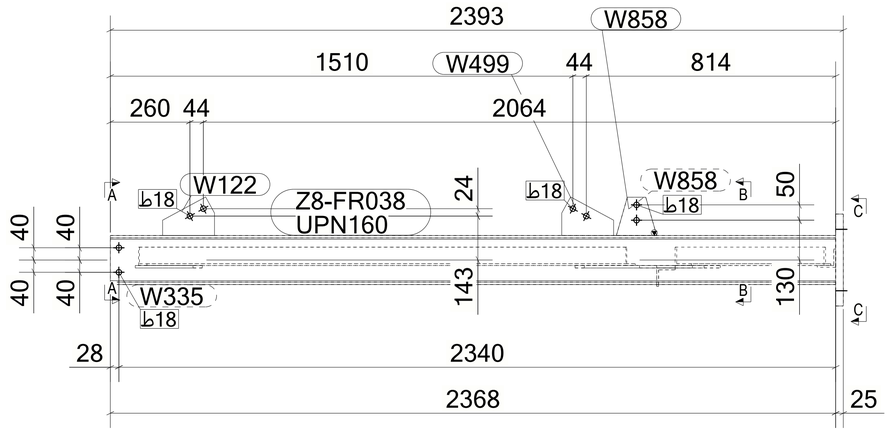

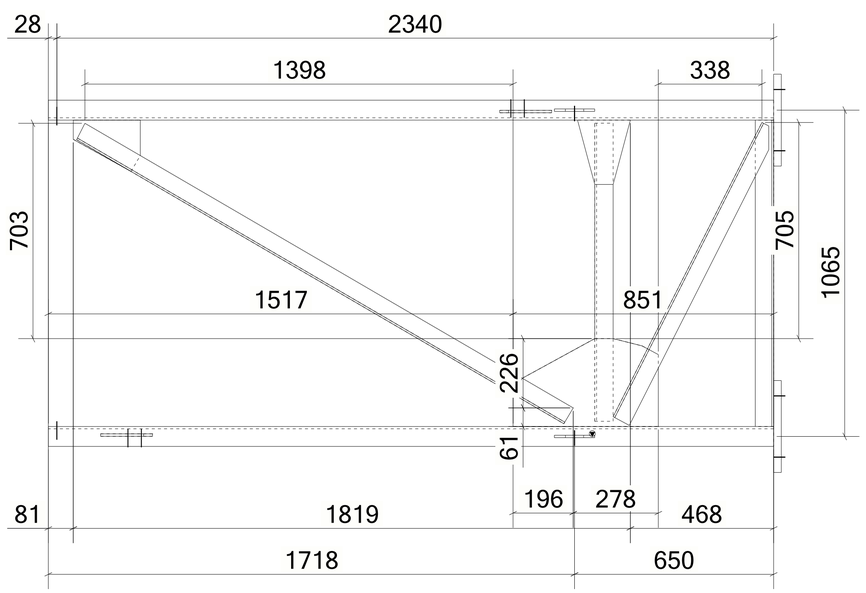

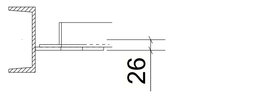

A - A

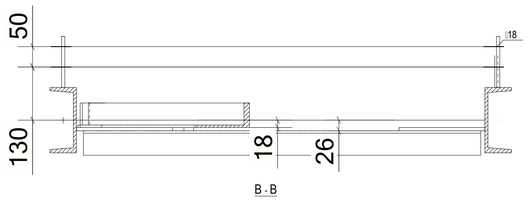

B - B

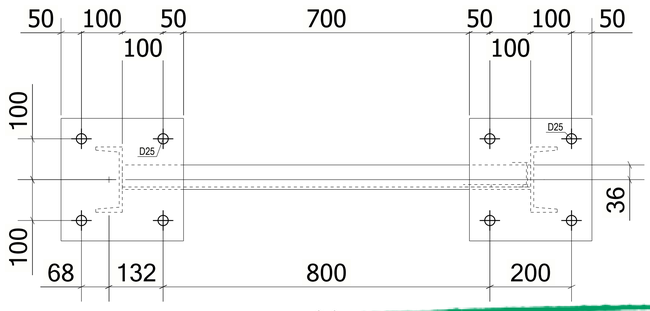

MATERIAL LIST FOR ASSEMBLY MK'D **Z8-FR038**

Mark	Profile	GRADE	No.	Length	Area	Weight
Z8-FR038	UPN160	S235JR	1	2368	1.30	44.61
W122	PL8*125.8	S355-JR	1	169	0.03	0.96
W335	UPN160	S235JR	1	2368	1.30	44.61
W422	L60*6	S235JR	1	1000	0.24	5.37
W430	L60*6	S235JR	1	973	0.23	5.22
W431	L60*6	S235JR	1	1078	0.26	5.72
W432	L60*6	S235JR	1	1845	0.44	9.89
W489	PL8*286.9	S355JR	1	474	0.24	7.09
W490	PL8*167.5	S355JR	1	219	0.06	1.63
W497	PL25*300	S355JR	1	300	0.21	17.66
W499	PL8*125.8	S355JR	1	169	0.03	0.96
W500	PL8*166.7	S355JR	1	233	0.05	1.53
W526	PL25*300	S355JR	1	300	0.21	17.66
W858	PL8*125	S355-JR	2	132	0.03	0.75
				Total	4.67	164.43

BOLT LIST:-

BOLT \ STUD	BOLT DESCRIPTION	QTY	FINISH

1 *REQUIRED AS DRAWN MARKED* **Z8-FR038**

6 October Monorail
Engineering Unit
Valid For Construction

GENERAL NOTES:

1. THE DIMENSIONS SHOWN ARE NOMINAL (IN MILLIMETERS), U.N.O.
2. WELD SIZESHALL BE AISC MINIMUM OF 6 mm UNLESS NOTED OTHERWISE.
3. ALL FIELD WELDS SHALL BE INSPECTED PER QUALITY ASSURANCE AND SPECIAL INSPECTIONS.

REFERENCE DRAWINGS

1	93M-BOA-NAT-LOT-04833
2	93M-BOA-NAT-LOT-09170
3	93M-BOA-NAT-LOT-01976
4	93M-BOA-NAT-LOT-20021
5	
6	
7	
8	
9	

6TH OF OCTOBER CITY RAIL TRANSIT MONORAIL

The Authority | Hill International Consultant | Main Contractor | Structural Designer

KEY PLAN:

SCALE: AS SHOWN | SHOPDRAWING | DATE

REV	DATE	DSG.	CHK.	APP.	AMENDMENTS	STATUS

DRAWING TITLE
6TH OF OCTOBER MONORAIL
SERVICE WALKWAYS
ZONE
Z8-FR038

Project Code	Rubric	Initiator	Lot	Ref	Number	Revision
93M047	6ACC	60DE	P	DWG	08216	B

Tekla structures

Same comments as
93M-0476-ACC-60DEP-DWG-08180-B.

REVIEWED WITH COMMENT
MONORAILS PROJECT

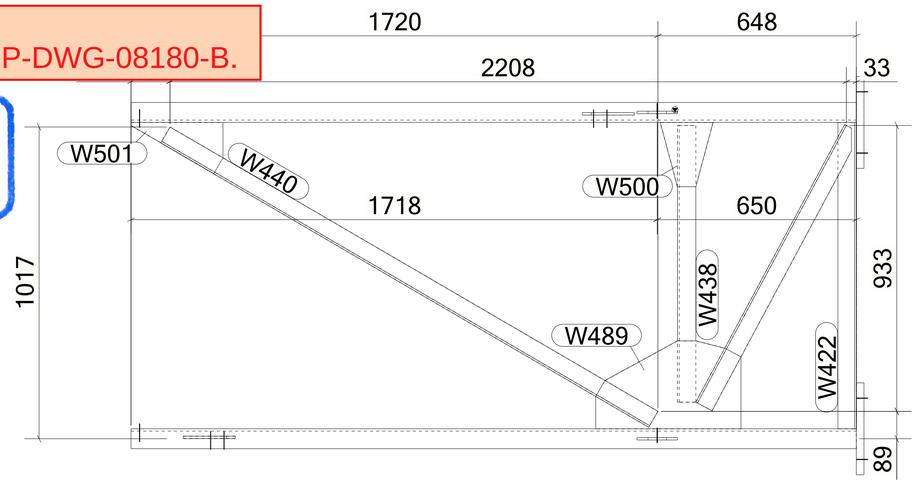

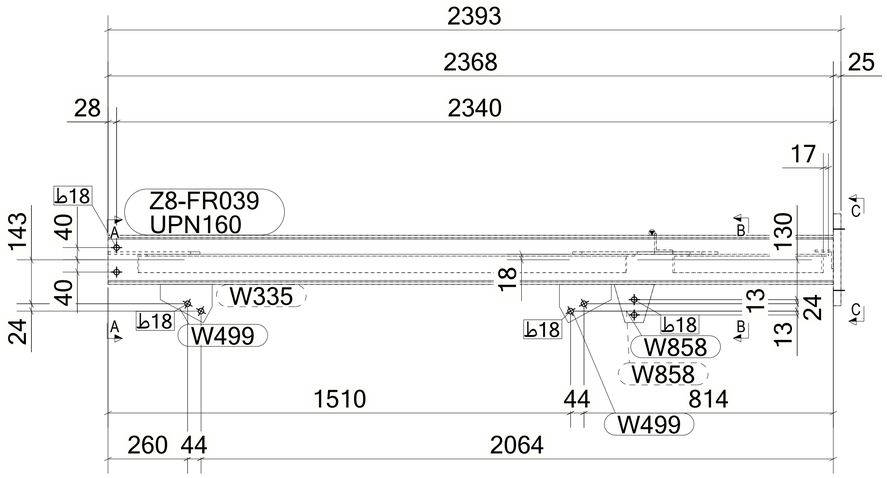

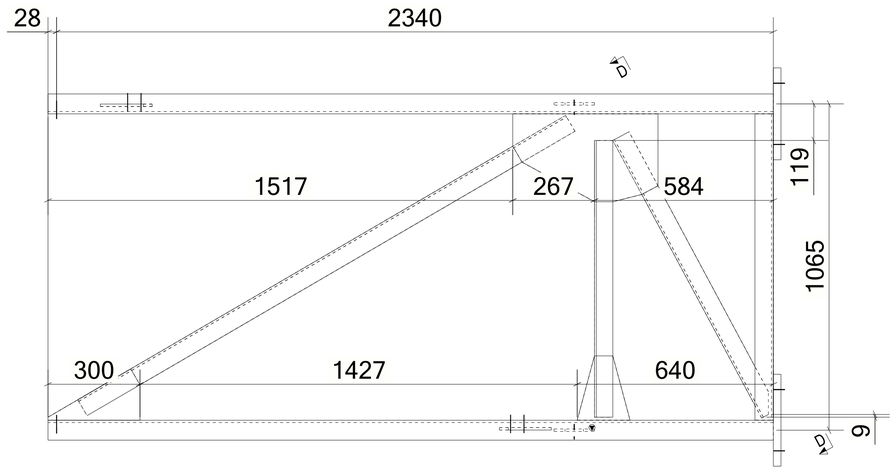

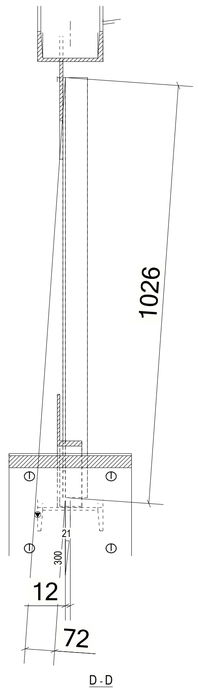

MATERIAL LIST FOR ASSEMBLY MK'D **Z8-FR039**

Mark	Profile	GRADE	No.	Length	Area	Weight
Z8-FR039	UPN160	S235JR	1	2368	1.30	44.61
W335	UPN160	S235JR	1	2368	1.30	44.61
W422	L60*6	S235JR	1	1000	0.24	5.37
W438	L60*6	S235JR	1	903	0.22	4.85
W439	L60*6	S235JR	1	1028	0.25	5.47
W440	L60*6	S235JR	1	1844	0.44	9.90
W489	PL8*286.9	S355JR	1	474	0.24	7.09
W497	PL25*300	S355JR	2	300	0.21	17.66
W499	PL8*125.8	S355JR	2	169	0.03	0.96
W500	PL8*166.7	S355JR	1	233	0.05	1.53
W501	PL8*159.9	S355JR	1	318	0.06	1.77
W858	PL8*125	S355-JR	2	132	0.03	0.75
				Total	4.65	163.95

BOLT LIST:-

BOLT \ STUD	BOLT DESCRIPTION	QTY	FINISH

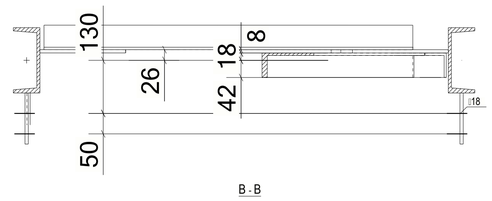

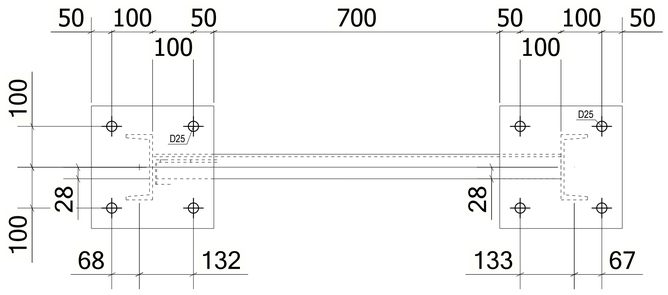

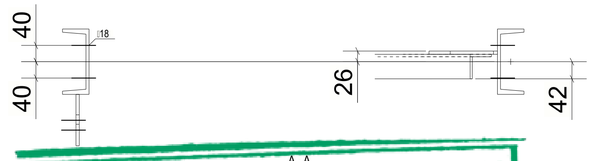

1 *REQUIRED AS DRAWN MARKED* **Z8-FR039**

GENERAL NOTES:

1. THE DIMENSIONS SHOWN ARE NOMINAL (IN MILLIMETERS), U.N.O.
2. WELD SIZESHALL BE AISC MINIMUM OF 6 mm UNLESS NOTED OTHERWISE.
3. ALL FIELD WELDS SHALL BE INSPECTED PER QUALITY ASSURANCE AND SPECIAL INSPECTIONS.

REFERENCE DRAWINGS

1	93M-BOA-NAT-LOT-04833
2	93M-BOA-NAT-LOT-09170
3	93M-BOA-NAT-LOT-01976
4	93M-BOA-NAT-LOT-20021
5	
6	
7	
8	
9	

6TH OF OCTOBER CITY RAIL TRANSIT MONORAIL

The Authority — Hill International Consultant — Main Contractor — Structural Designer

KEY PLAN:

6 October Monorail
Engineering Unit
Valid For Construction

SCALE	SHOPDRAWING	DATE
AS SHOWN		

REV	DATE	DSG.	CHK.	APP.	AMENDMENTS	STATUS

DRAWING TITLE
6TH OF OCTOBER MONORAIL
SERVICE WALKWAYS
ZONE
Z8-FR039

Project Code	Rubric	Initiator	Lot	Ref	Number	Revision
93M	0476	ACC	60DEP	DWG	08217	B

Tekla structures

Same comments as
93M-0476-ACC-60DEP-DWG-08180-B.

REVIEWED WITH COMMENT MONORAILS PROJECT

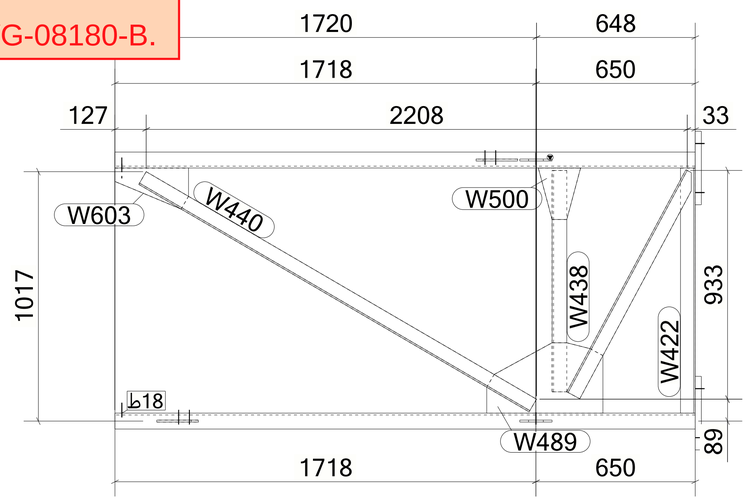

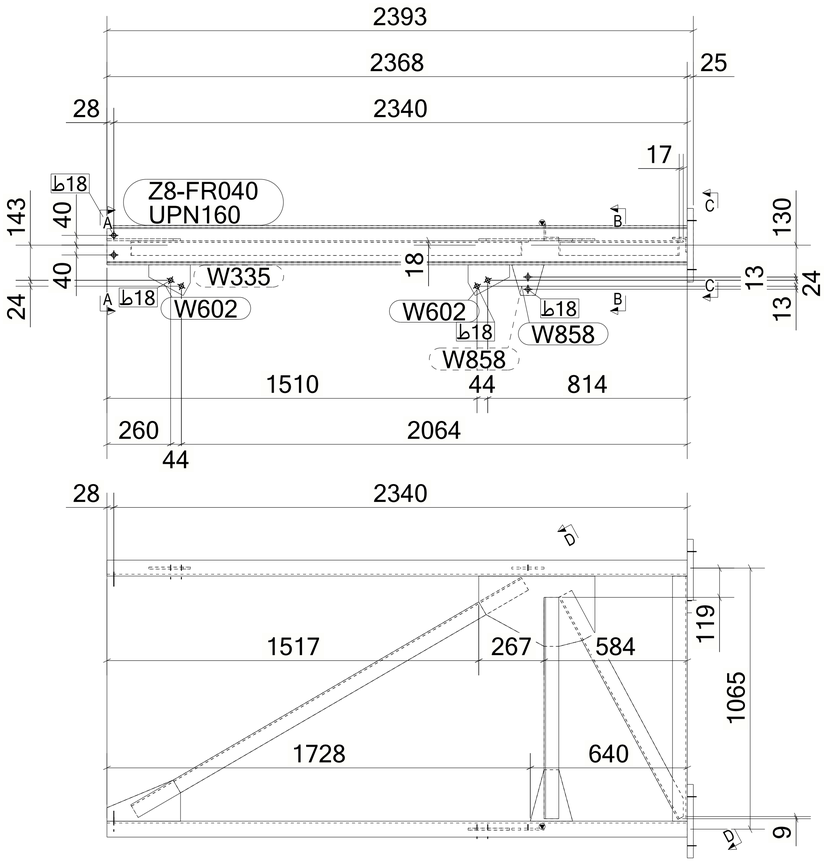

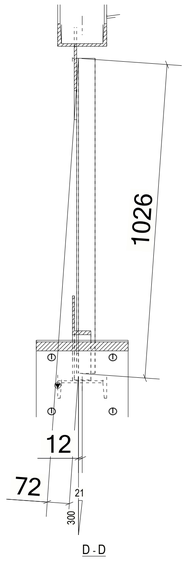

MATERIAL LIST FOR ASSEMBLY MK'D **Z8-FR040**

Mark	Profile	GRADE	No.	Length	Area	Weight
Z8-FR040	UPN160	S235JR	1	2368	1.30	44.61
W335	UPN160	S235JR	1	2368	1.30	44.61
W422	L60*6	S235JR	1	1000	0.24	5.37
W438	L60*6	S235JR	1	903	0.22	4.85
W439	L60*6	S235JR	1	1028	0.25	5.47
W440	L60*6	S235JR	1	1844	0.44	9.90
W489	PL8*286.9	S355JR	1	474	0.24	7.09
W497	PL25*300	S355JR	2	300	0.21	17.66
W500	PL8*166.7	S355JR	1	233	0.05	1.53
W602	PL8*125.8	S355-JR	2	169	0.03	0.96
W603	PL8*167.5	S355JR	1	300	0.08	2.16
W858	PL8*125	S355-JR	2	132	0.03	0.75
				Total	4.66	164.33

BOLT LIST:-

BOLT \ STUD	BOLT DESCRIPTION	QTY	FINISH

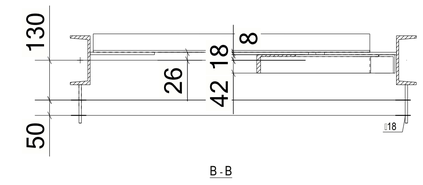

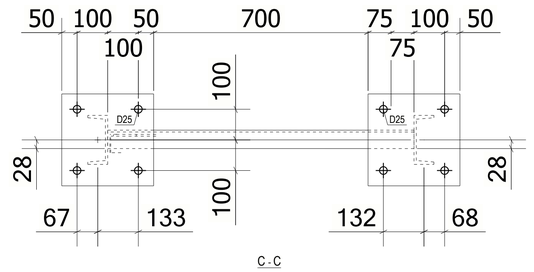

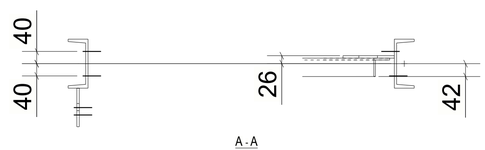

1 *REQUIRED AS DRAWN MARKED* **Z8-FR040**

6 October Monorail
Engineering Unit
Valid For Construction

GENERAL NOTES:

1. THE DIMENSIONS SHOWN ARE NOMINAL (IN MILLIMETERS), U.N.O.
2. WELD SIZESHALL BE AISC MINIMUM OF 6 mm UNLESS NOTED OTHERWISE.
3. ALL FIELD WELDS SHALL BE INSPECTED PER QUALITY ASSURANCE AND SPECIAL INSPECTIONS.

REFERENCE DRAWINGS

1	93M-BOA-NAT-LOT-04833
2	93M-BOA-NAT-LOT-09170
3	93M-BOA-NAT-LOT-01976
4	93M-BOA-NAT-LOT-20021
5	
6	
7	
8	
9	

6TH OF OCTOBER CITY RAIL TRANSIT MONORAIL

The Authority | Hill International Consultant | ORASCOM BOMBARDIER Main Contractor | INNOVA TRANSPORTATION Structural Designer

KEY PLAN:

SCALE	SHOPDRAWING	DATE
AS SHOWN		

REV	DATE	DSG.	CHK.	APP.	AMENDMENTS	STATUS

DRAWING TITLE
6TH OF OCTOBER MONORAIL
SERVICE WALKWAYS
ZONE
Z8-FR040

Project Code	Rubric	Initiator	Lot	Ref	Number	Revision
93M	0476	ACC	60DEP	DWG	08218	B

Tekla structures

Same comments as
93M-0476-ACC-60DEP-DWG-08180-B.

REVIEWED WITH COMMENT
MONORAILS PROJECT

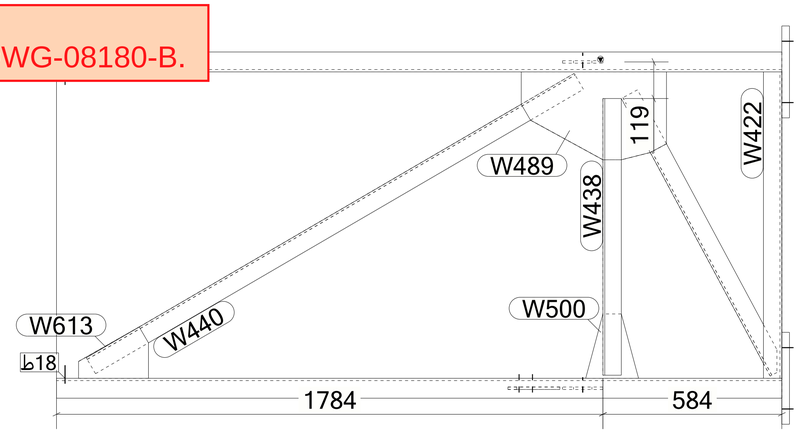

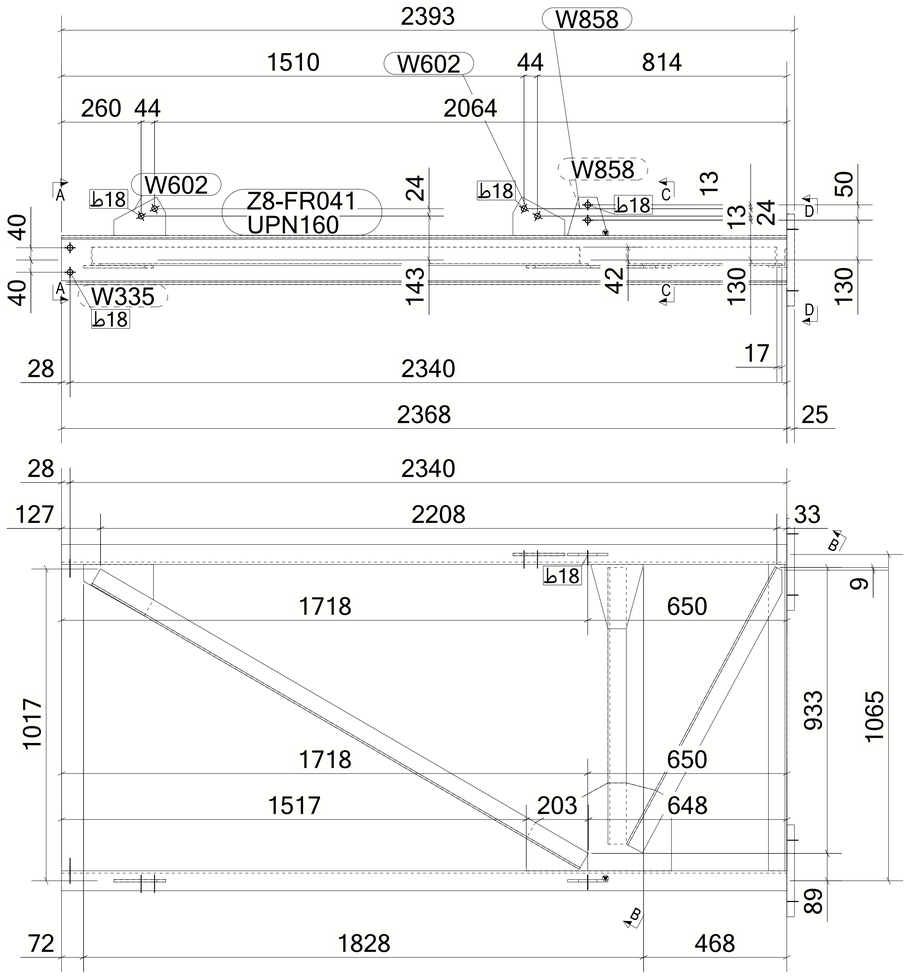

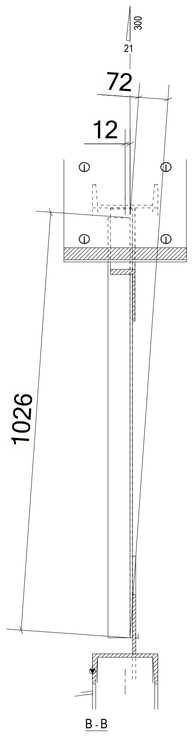

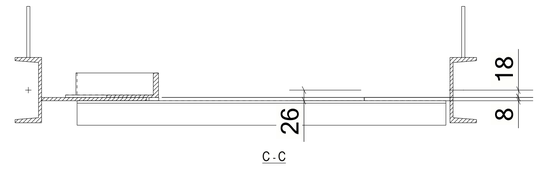

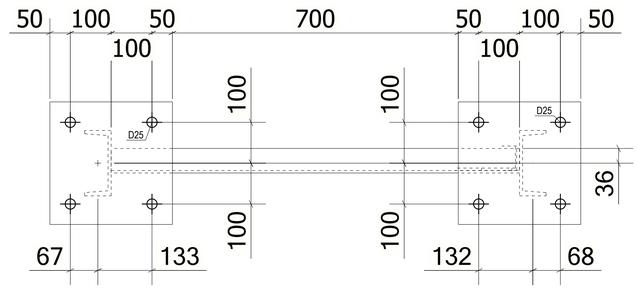

MATERIAL LIST FOR ASSEMBLY MK'D **Z8-FR041**

Mark	Profile	GRADE	No.	Length	Area	Weight
Z8-FR041	UPN160	S235JR	1	2368	1.30	44.61
W335	UPN160	S235JR	1	2368	1.30	44.61
W422	L60*6	S235JR	1	1000	0.24	5.37
W438	L60*6	S235JR	1	903	0.22	4.85
W439	L60*6	S235JR	1	1028	0.25	5.47
W440	L60*6	S235JR	1	1844	0.44	9.90
W489	PL8*286.9	S355JR	1	474	0.24	7.09
W497	PL25*300	S355JR	2	300	0.21	17.66
W500	PL8*166.7	S355JR	1	233	0.05	1.53
W602	PL8*125.8	S355-JR	2	169	0.03	0.96
W613	PL8*167.5	S355JR	1	228	0.06	1.65
W858	PL8*125	S355-JR	2	132	0.03	0.75
				Total	4.65	163.83

BOLT LIST:-

BOLT \ STUD	BOLT DESCRIPTION	QTY	FINISH

1 *REQUIRED AS DRAWN MARKED* **Z8-FR041**

6 October Monorail
Engineering Unit
Valid For Construction

GENERAL NOTES:

1. THE DIMENSIONS SHOWN ARE NOMINAL (IN MILLIMETERS), U.N.O.
2. WELD SIZESHALL BE AISC MINIMUM OF 6 mm UNLESS NOTED OTHERWISE.
3. ALL FIELD WELDS SHALL BE INSPECTED PER QUALITY ASSURANCE AND SPECIAL INSPECTIONS.

REFERENCE DRAWINGS

1	93M-BOA-NAT-LOT-04833
2	93M-BOA-NAT-LOT-09170
3	93M-BOA-NAT-LOT-01976
4	93M-BOA-NAT-LOT-20021
5	
6	
7	
8	
9	

6TH OF OCTOBER CITY RAIL TRANSIT MONORAIL

The Authority — Hill International (Consultant) — Main Contractor — Structural Designer

KEY PLAN:

SCALE	SHOPDRAWING	DATE
AS SHOWN		

REV	DATE	DSG.	CHK.	APP.	AMENDMENTS	STATUS

DRAWING TITLE
6TH OF OCTOBER MONORAIL
SERVICE WALKWAYS
ZONE
Z8-FR041

Project Code	Rubric	Initiator	Lot	Ref	Number	Revision
93M	047	6ACC	60DEP	DWG	08219	B

Tekla structures

Same comments as
93M-0476-ACC-60DEP-DWG-08180-B.

REVIEWED WITH COMMENT
MONORAILS PROJECT

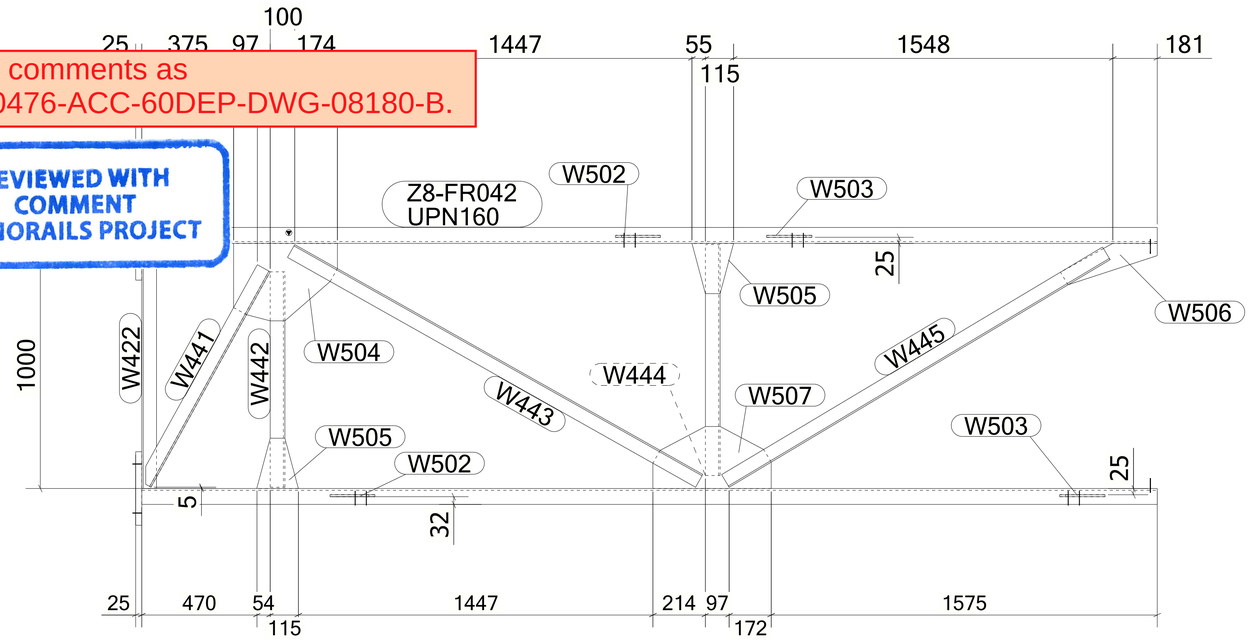

MATERIAL LIST FOR ASSEMBLY MK'D **Z8-FR042**

Mark	Profile	GRADE	No.	Length	Area	Weight
Z8-FR042	UPN160	S235JR	1	4144	2.28	78.07
W336	UPN160	S235JR	1	4144	2.28	78.07
W422	L60*6	S235JR	1	1000	0.24	5.37
W441	L60*6	S235JR	1	1004	0.24	5.34
W442	L60*6	S235JR	1	879	0.21	4.72
W443	L60*6	S235JR	1	1911	0.46	10.26
W444	L60*6	S235JR	1	942	0.23	5.06
W445	L60*6	S235JR	1	1811	0.44	9.72
W497	PL25*300	S355JR	2	300	0.21	17.66
W502	PL8*120.8	S355JR	2	183	0.04	1.00
W503	PL8*120.2	S355JR	2	185	0.04	1.00
W504	PL8*316.1	S355JR	1	424	0.23	6.93
W505	PL8*164.1	S355JR	2	228	0.05	1.48
W506	PL8*103.9	S355JR	1	412	0.07	1.99
W507	PL8*252.9	S355JR	1	483	0.21	6.12
				Total	7.55	253.93

BOLT LIST:-

BOLT \ STUD	BOLT DESCRIPTION	QTY	FINISH

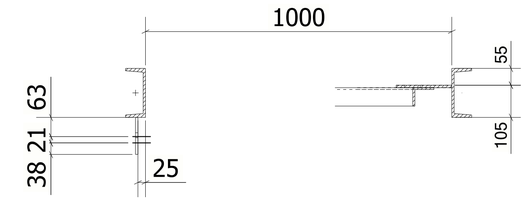

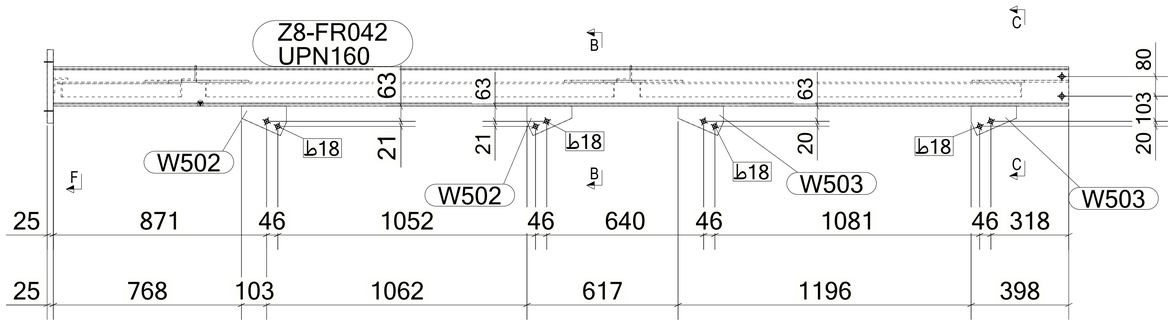

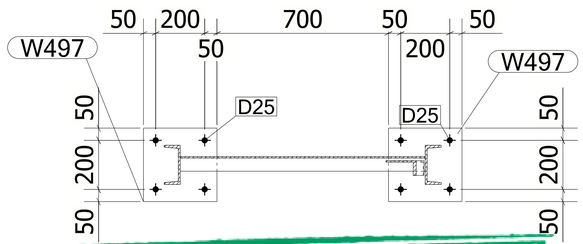

6 October Monorail
Engineering Unit
Valid For Construction

1 *REQUIRED AS DRAWN MARKED* **Z8-FR042**

GENERAL NOTES:

1. THE DIMENSIONS SHOWN ARE NOMINAL (IN MILLIMETERS), U.N.O.
2. WELD SIZESHALL BE AISC MINIMUM OF 6 mm UNLESS NOTED OTHERWISE.
3. ALL FIELD WELDS SHALL BE INSPECTED PER QUALITY ASSURANCE AND SPECIAL INSPECTIONS.

REFERENCE DRAWINGS

1	93M-BOA-NAT-LOT-04833
2	93M-BOA-NAT-LOT-09170
3	93M-BOA-NAT-LOT-01976
4	93M-BOA-NAT-LOT-20021
5	
6	
7	
8	
9	

6TH OF OCTOBER CITY RAIL TRANSIT MONORAIL

The Authority — Consultant — Main Contractor — Structural Designer

KEY PLAN:

SCALE	SHOPDRAWING	DATE
AS SHOWN		12/05/2023

REV	DATE	DSG.	CHK.	APP.	AMENDMENTS	STATUS
B	12/05/2023	M.KH	M.KH	DR.M.M	ISSUED FOR INFORMATION	IFI
A	11/20/2022	M.KH	M.KH	DR.M.M	ISSUED FOR INFORMATION	IFI

DRAWING TITLE
6TH OF OCTOBER MONORAIL
SERVICE WALKWAYS
ZONE (1008)
Z8-FR042

Project Code	Rubric	Initiator	Lot	Ref	Number	Revision
93M	047	6ACC	60DE	PDWG	08220	B

Tekla structures

Same comments as
93M-0476-ACC-60DEP-DWG-08180-B.

REVIEWED WITH COMMENT
MONORAILS PROJECT

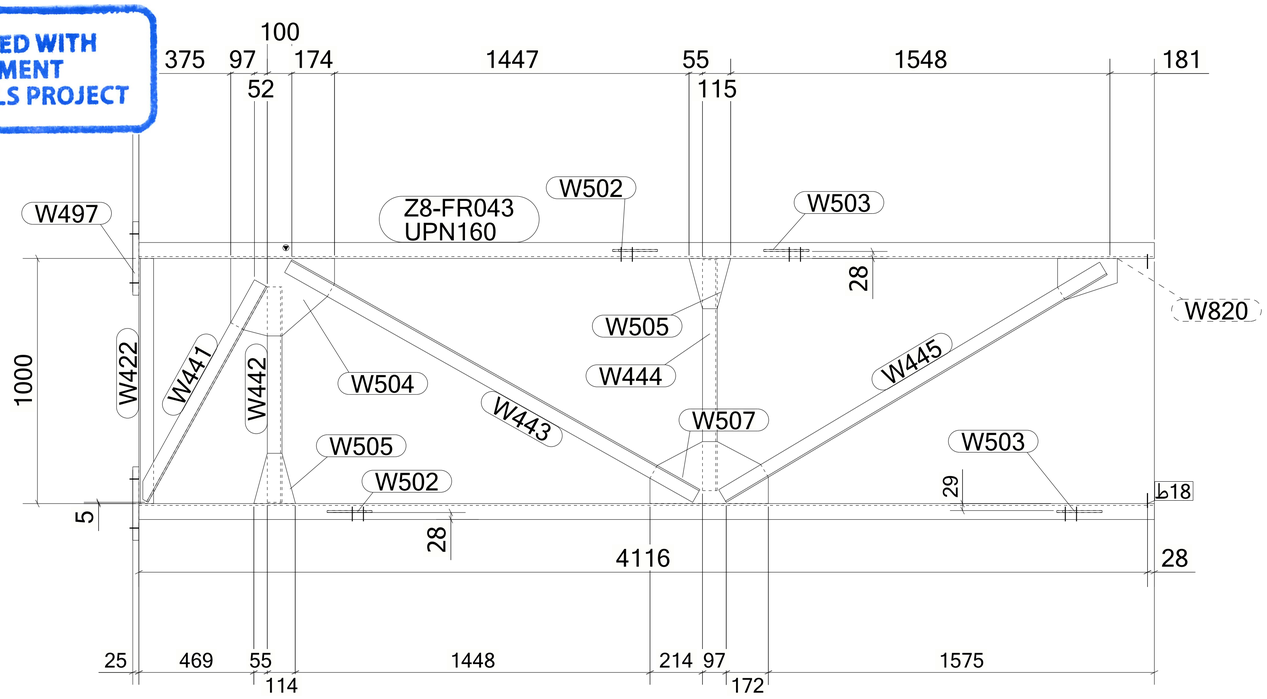

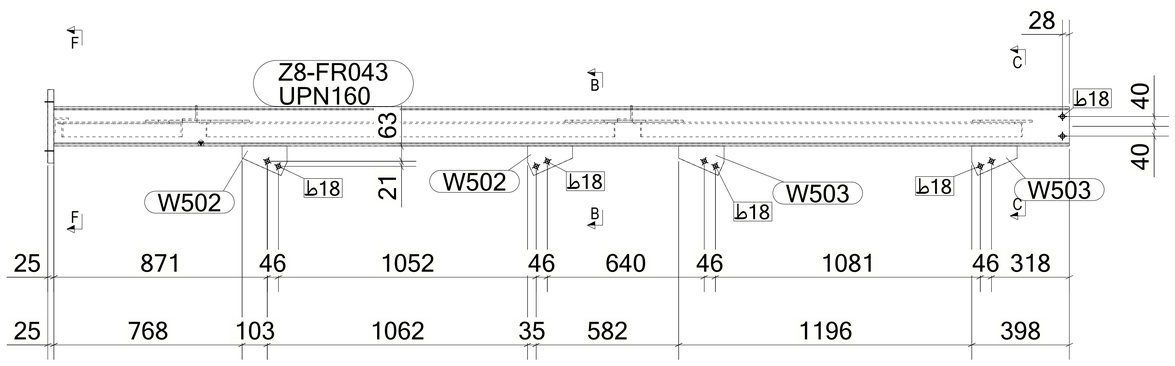

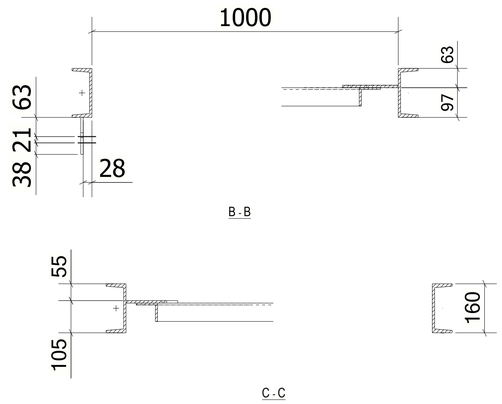

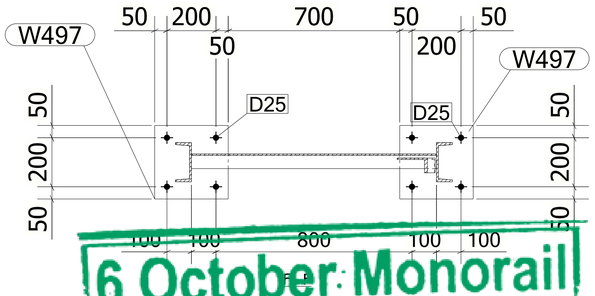

MATERIAL LIST FOR ASSEMBLY MK'D **Z8-FR043**

Mark	Profile	GRADE	No.	Length	Area	Weight
Z8-FR043	UPN160	S235JR	1	4144	2.28	78.07
W336	UPN160	S235JR	1	4144	2.28	78.07
W422	L60*6	S235JR	1	1000	0.24	5.37
W441	L60*6	S235JR	1	1004	0.24	5.34
W442	L60*6	S235JR	1	879	0.21	4.72
W443	L60*6	S235JR	1	1911	0.46	10.26
W444	L60*6	S235JR	1	942	0.23	5.06
W445	L60*6	S235JR	1	1811	0.44	9.72
W497	PL25*300	S355JR	2	300	0.21	17.66
W502	PL8*120.8	S355JR	2	183	0.04	1.00
W503	PL8*120.2	S355JR	2	185	0.04	1.00
W504	PL8*316.1	S355JR	1	424	0.23	6.93
W505	PL8*164.1	S355JR	2	228	0.05	1.48
W507	PL8*252.9	S355JR	1	483	0.21	6.12
W820	PL8*169.1	S355-JR	1	244	0.07	2.07
				Total	7.55	254.01

BOLT LIST:-

BOLT \ STUD	BOLT DESCRIPTION	QTY	FINISH

1 *REQUIRED AS DRAWN MARKED* **Z8-FR043**

GENERAL NOTES:

1. THE DIMENSIONS SHOWN ARE NOMINAL (IN MILLIMETERS), U.N.O.
2. WELD SIZESHALL BE AISC MINIMUM OF 6 mm UNLESS NOTED OTHERWISE.
3. ALL FIELD WELDS SHALL BE INSPECTED PER QUALITY ASSURANCE AND SPECIAL INSPECTIONS.

REFERENCE DRAWINGS

1	93M-BOA-NAT-LOT-04833
2	93M-BOA-NAT-LOT-09170
3	93M-BOA-NAT-LOT-01976
4	93M-BOA-NAT-LOT-20021
5	
6	
7	
8	
9	

6TH OF OCTOBER CITY RAIL TRANSIT MONORAIL

The Authority | Consultant: Hill International | Main Contractor: ORASCOM CONSTRUCTION / BOMBARDIER | Structural Designer: INNOVA TRANSPORTATION

KEY PLAN:

6 October Monorail
Engineering Unit
Valid For Construction

SCALE	SHOPDRAWING	DATE
AS SHOWN		12/05/2023

REV	DATE	DSG.	CHK.	APP.	AMENDMENTS	STATUS
B	12/05/2023	M.KH	M.KH	DR.M.M	ISSUED FOR INFORMATION	IFI
A	11/20/2022	M.KH	M.KH	DR.M.M	ISSUED FOR INFORMATION	IFI

DRAWING TITLE
6TH OF OCTOBER MONORAIL
SERVICE WALKWAYS
ZONE (1008)
Z8-FR043

Project Code	Rubric	Initiator	Lot	Ref	Number	Revision
93M	047	6ACC	60DEP	DWG	08221	B

Tekla structures

Same comments as
93M-0476-ACC-60DEP-DWG-08180-B.

REVIEWED WITH COMMENT
MONORAILS PROJECT

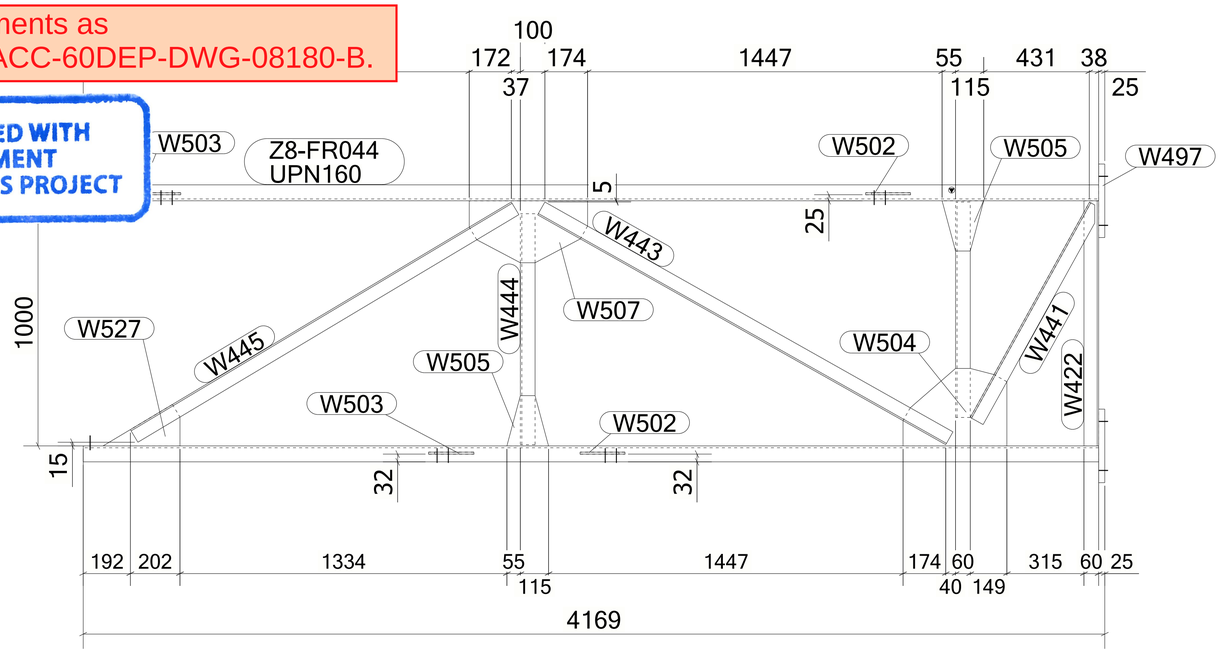

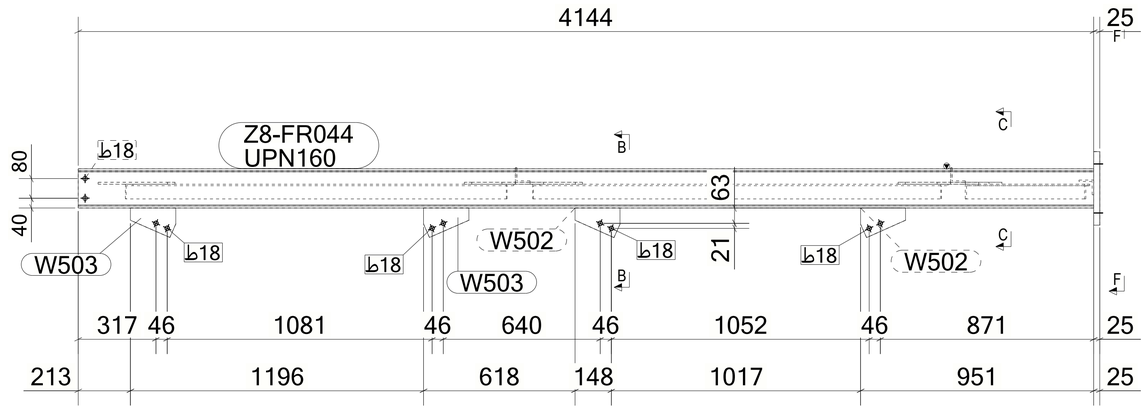

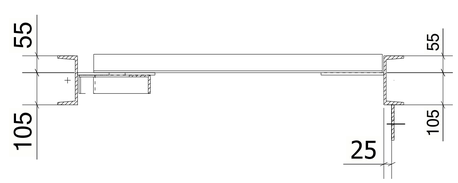

B - B

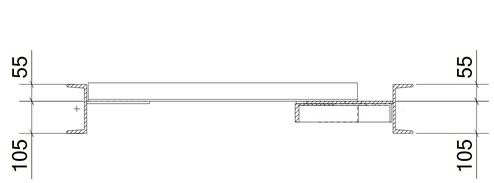

C - C

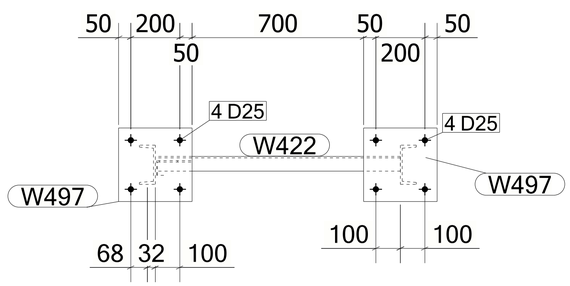

F - F

MATERIAL LIST FOR ASSEMBLY MK'D **Z8-FR044**

Mark	Profile	GRADE	No.	Length	Area	Weight
Z8-FR044	UPN160	S235JR	1	4144	2.28	78.07
W336	UPN160	S235JR	1	4144	2.28	78.07
W422	L60*6	S235JR	1	1000	0.24	5.37
W441	L60*6	S235JR	1	1004	0.24	5.34
W442	L60*6	S235JR	1	879	0.21	4.72
W443	L60*6	S235JR	1	1911	0.46	10.26
W444	L60*6	S235JR	1	942	0.23	5.06
W445	L60*6	S235JR	1	1811	0.44	9.72
W497	PL25*300	S355JR	2	300	0.21	17.66
W502	PL8*120.8	S355JR	2	183	0.04	1.00
W503	PL8*120.2	S355JR	2	185	0.04	1.00
W504	PL8*316.1	S355JR	1	424	0.23	6.93
W505	PL8*164.1	S355JR	2	228	0.05	1.48
W507	PL8*252.9	S355JR	1	483	0.21	6.12
W527	PL8*160.9	S355JR	1	330	0.06	1.78
				Total	7.54	253.72

BOLT LIST:-

BOLT \ STUD	BOLT DESCRIPTION	QTY	FINISH

1 *REQUIRED AS DRAWN MARKED* **Z8-FR044**

GENERAL NOTES:

1. THE DIMENSIONS SHOWN ARE NOMINAL (IN MILLIMETERS), U.N.O.
2. WELD SIZESHALL BE AISC MINIMUM OF 6 mm UNLESS NOTED OTHERWISE.
3. ALL FIELD WELDS SHALL BE INSPECTED PER QUALITY ASSURANCE AND SPECIAL INSPECTIONS.

REFERENCE DRAWINGS

1	93M-BOA-NAT-LOT-04833
2	93M-BOA-NAT-LOT-09170
3	93M-BOA-NAT-LOT-01976
4	93M-BOA-NAT-LOT-20021
5	
6	
7	
8	
9	

6TH OF OCTOBER CITY RAIL TRANSIT MONORAIL

The Authority — Consultant — Main Contractor — Structural Designer

KEY PLAN:

6 October Monorail
Engineering Unit
Valid For Construction

SCALE	SHOPDRAWING	DATE
AS SHOWN		12/05/2023

REV	DATE	DSG.	CHK.	APP.	AMENDMENTS	STATUS
B	12/05/2023	M.KH	M.KH	DR.M.M	ISSUED FOR INFORMATION	IFI
A	11/20/2022	M.KH	M.KH	DR.M.M	ISSUED FOR INFORMATION	IFI

DRAWING TITLE
6TH OF OCTOBER MONORAIL
SERVICE WALKWAYS
ZONE (1008)
Z8-FR044

Project Code	Rubric	Initiator	Lot	Ref	Number	Revision
93	M047	6ACC	60DE	PDWG	0822	B

Tekla structures

Same comments as
93M-0476-ACC-60DEP-DWG-08180-B.

REVIEWED WITH COMMENT
MONORAILS PROJECT

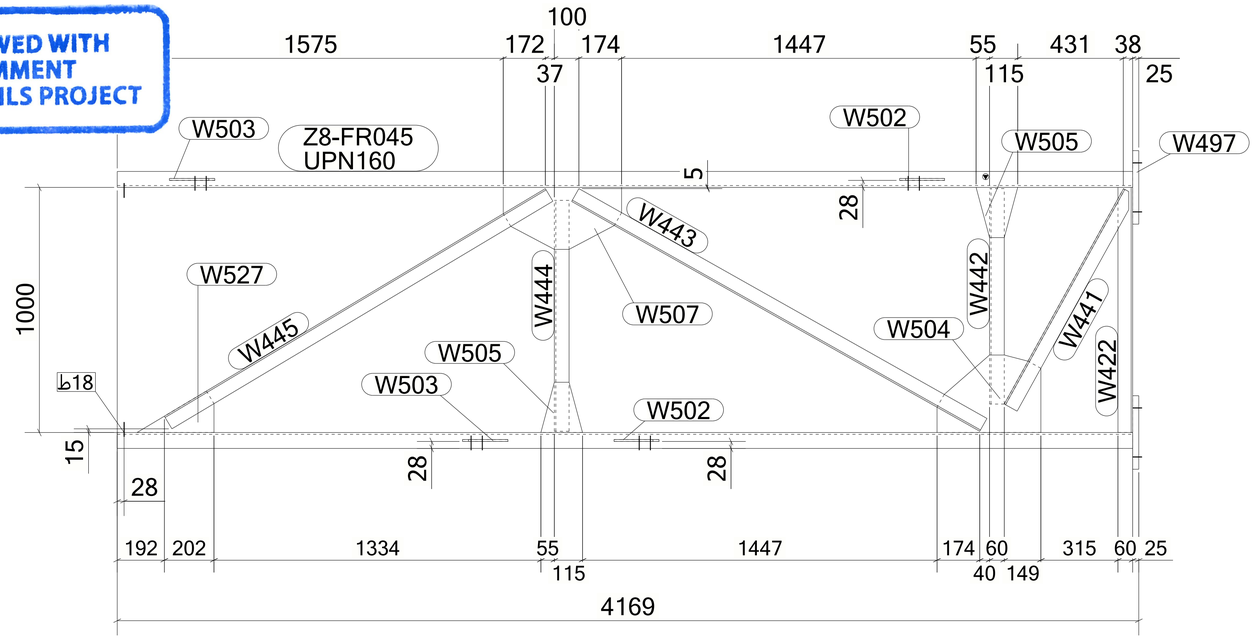

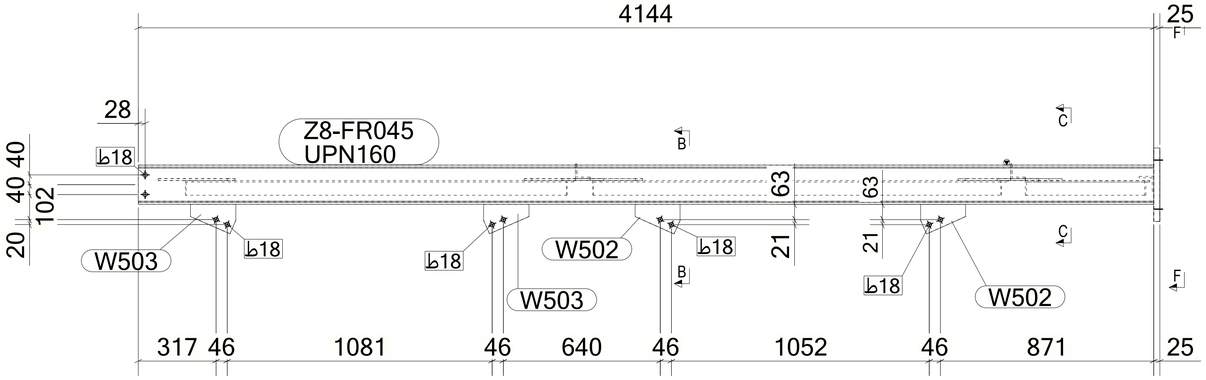

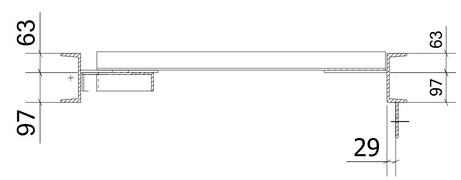

B - B

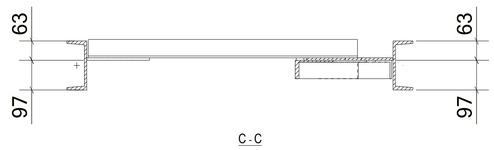

C - C

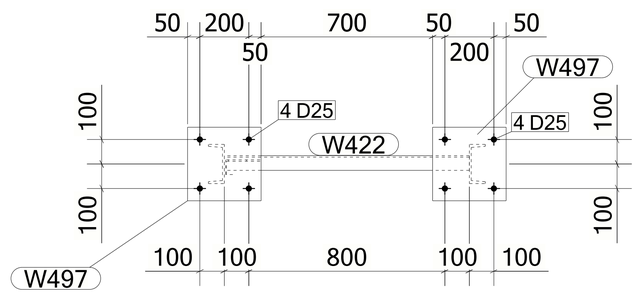

F - F

MATERIAL LIST FOR ASSEMBLY MK'D **Z8-FR045**

Mark	Profile	GRADE	No.	Length	Area	Weight
Z8-FR045	UPN160	S235JR	1	4144	2.28	78.07
W336	UPN160	S235JR	1	4144	2.28	78.07
W422	L60*6	S235JR	1	1000	0.24	5.37
W441	L60*6	S235JR	1	1004	0.24	5.34
W442	L60*6	S235JR	1	879	0.21	4.72
W443	L60*6	S235JR	1	1911	0.46	10.26
W444	L60*6	S235JR	1	942	0.23	5.06
W445	L60*6	S235JR	1	1811	0.44	9.72
W497	PL25*300	S355JR	2	300	0.21	17.66
W502	PL8*120.8	S355JR	2	183	0.04	1.00
W503	PL8*120.2	S355JR	2	185	0.04	1.00
W504	PL8*316.1	S355JR	1	424	0.23	6.93
W505	PL8*164.1	S355JR	2	228	0.05	1.48
W507	PL8*252.9	S355JR	1	483	0.21	6.12
W527	PL8*160.9	S355JR	1	330	0.06	1.78
				Total	7.54	253.72

BOLT LIST:-

BOLT \ STUD	BOLT DESCRIPTION	QTY	FINISH

1 *REQUIRED AS DRAWN MARKED* **Z8-FR045**

GENERAL NOTES:

1. THE DIMENSIONS SHOWN ARE NOMINAL (IN MILLIMETERS), U.N.O.
2. WELD SIZESHALL BE AISC MINIMUM OF 6 mm UNLESS NOTED OTHERWISE.
3. ALL FIELD WELDS SHALL BE INSPECTED PER QUALITY ASSURANCE AND SPECIAL INSPECTIONS.

REFERENCE DRAWINGS

1	93M-BOA-NAT-LOT-04833
2	93M-BOA-NAT-LOT-09170
3	93M-BOA-NAT-LOT-01976
4	93M-BOA-NAT-LOT-20021
5	
6	
7	
8	
9	

6TH OF OCTOBER CITY RAIL TRANSIT MONORAIL

The Authority — Consultant — Main Contractor — Structural Designer

KEY PLAN:

6 October Monorail
Engineering Unit
Valid For Construction

SCALE	SHOPDRAWING	DATE
AS SHOWN		12/05/2023

REV	DATE	DSG.	CHK.	APP.	AMENDMENTS	STATUS
B	12/05/2023	M.KH	M.KH	DR.M.M	ISSUED FOR INFORMATION	IFI
A	11/20/2022	M.KH	M.KH	DR.M.M	ISSUED FOR INFORMATION	IFI

DRAWING TITLE
6TH OF OCTOBER MONORAIL
SERVICE WALKWAYS
ZONE (1008)
Z8-FR045

Project Code	Rubric	Initiator	Lot	Ref	Number	Revision
93M	0476	ACC	60	DEP	DWG 08223	B

Tekla structures

Approval is subject to approval of coordination package between multi-discipline.

REVIEWED WITH COMMENT
MONORAILS PROJECT

MATERIAL LIST FOR ASSEMBLY MK'D **Z8-FR046**

Mark	Profile	GRADE	No.	Length	Area	Weight
Z8-FR046	L70*7	S235JR	1	985	0.28	7.20
W447	L70*7	S235JR	1	966	0.27	7.06
W449	L70*7	S235JR	1	985	0.28	7.20
W450	L70*7	S235JR	1	966	0.27	7.06
				Total	1.10	28.51

BOLT LIST:-

BOLT \ STUD	BOLT DESCRIPTION	QTY	FINISH
BOLT	B1N2W 16 X 50 A325M	10	

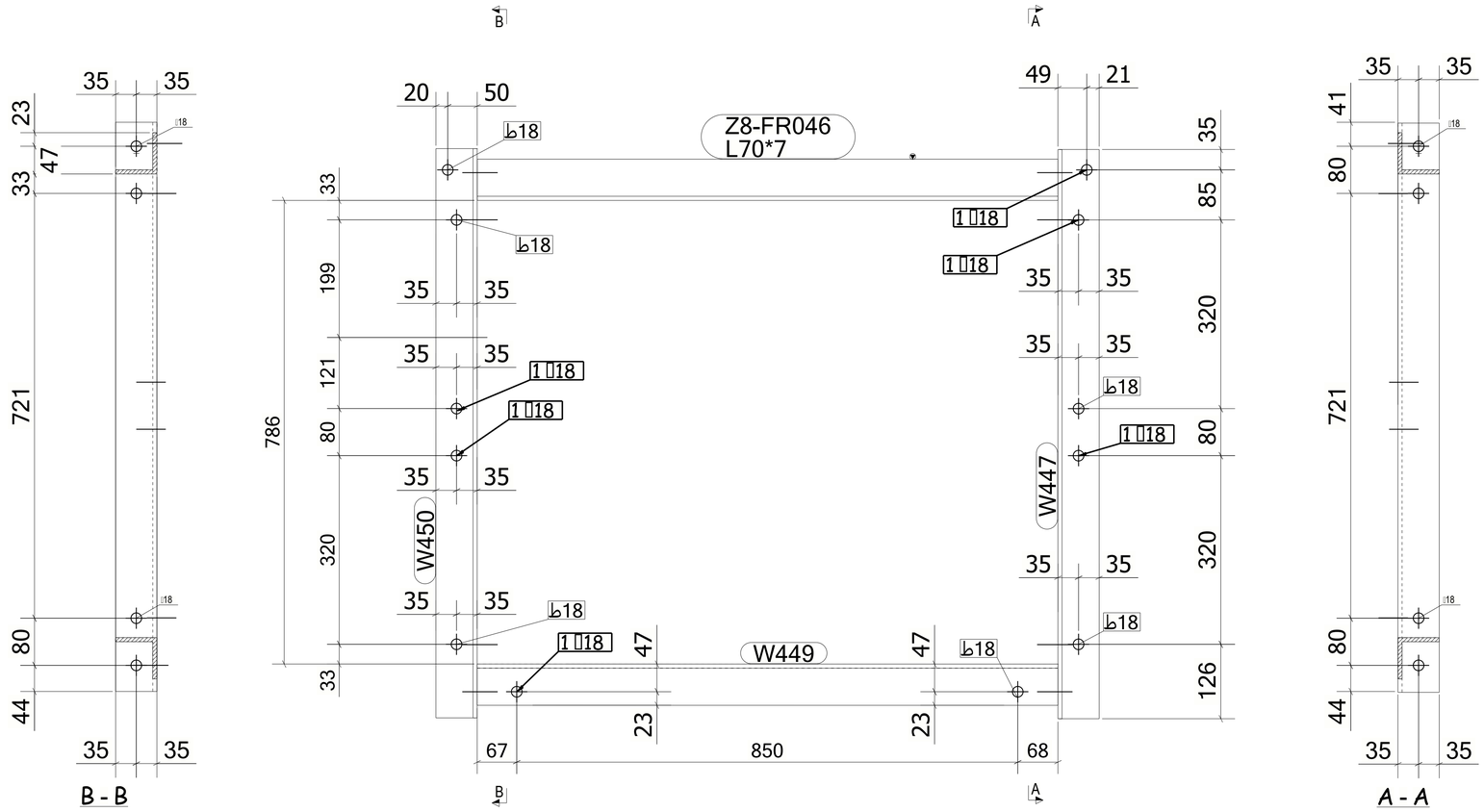

2 *REQUIRED AS DRAWN MARKED* **Z8-FR046**

6 October Monorail
Engineering Unit
Valid For Construction

GENERAL NOTES:

1. THE DIMENSIONS SHOWN ARE NOMINAL (IN MILLIMETERS), U.N.O.
2. WELD SIZESHALL BE AISC MINIMUM OF 6 mm UNLESS NOTED OTHERWISE.
3. ALL FIELD WELDS SHALL BE INSPECTED PER QUALITY ASSURANCE AND SPECIAL INSPECTIONS.

REFERENCE DRAWINGS

1	93M-BOA-NAT-LOT-04833
2	93M-BOA-NAT-LOT-09170
3	93M-BOA-NAT-LOT-01976
4	93M-BOA-NAT-LOT-20021
5	
6	
7	
8	
9	

6TH OF OCTOBER CITY RAIL TRANSIT MONORAIL

The Authority | Consultant: Hill International | Main Contractor: ORASCOM CONSTRUCTION / BOMBARDIER | Structural Designer: INNOVA TRANSPORTATION

KEY PLAN:

SCALE: AS SHOWN | SHOPDRAWING | DATE: 12/05/2023

REV	DATE	DSG.	CHK.	APP.	AMENDMENTS	STATUS
B	12/05/2023	M.KH	M.KH	DR.M.M	ISSUED FOR INFORMATION	IFI
A	11/20/2022	M.KH	M.KH	DR.M.M	ISSUED FOR INFORMATION	IFI

DRAWING TITLE
6TH OF OCTOBER MONORAIL
SERVICE WALKWAYS
ZONE (1008)
Z8-FR046

Project Code	Rubric	Initiator	Lot	Ref	Number	Revision
93M	047	6ACC	60DE	PDWG	08224	B

Tekla structures

Same comments as
93M-0476-ACC-60DEP-DWG-08180-B.

REVIEWED WITH COMMENT
MONORAILS PROJECT

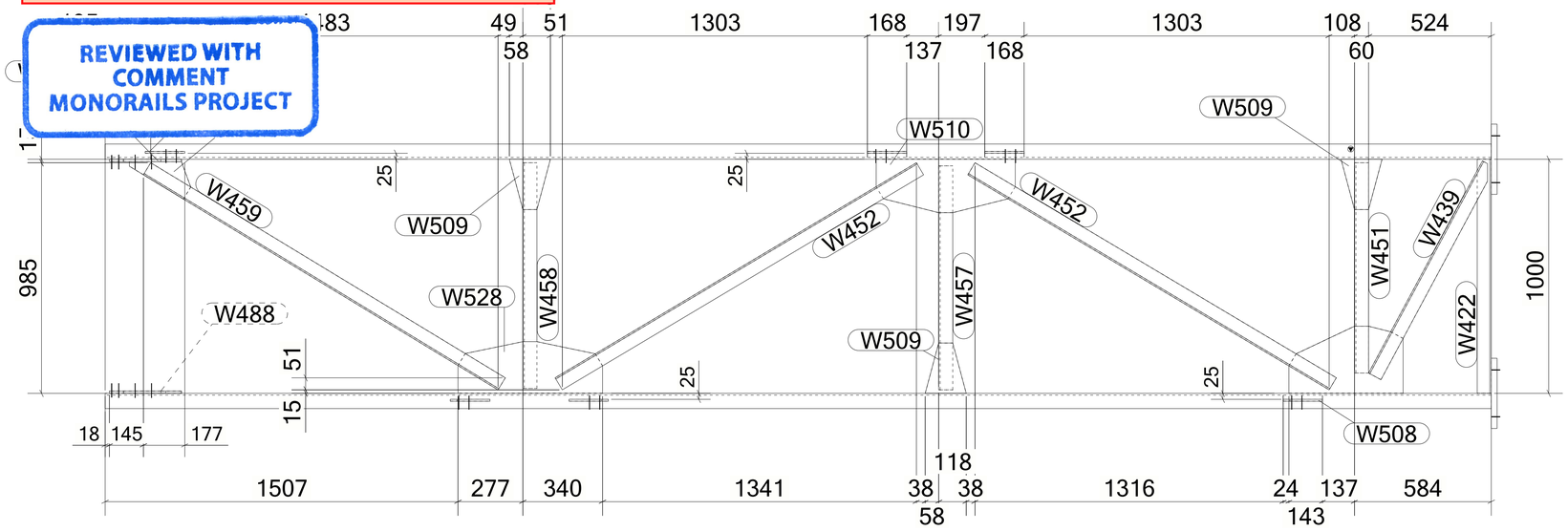

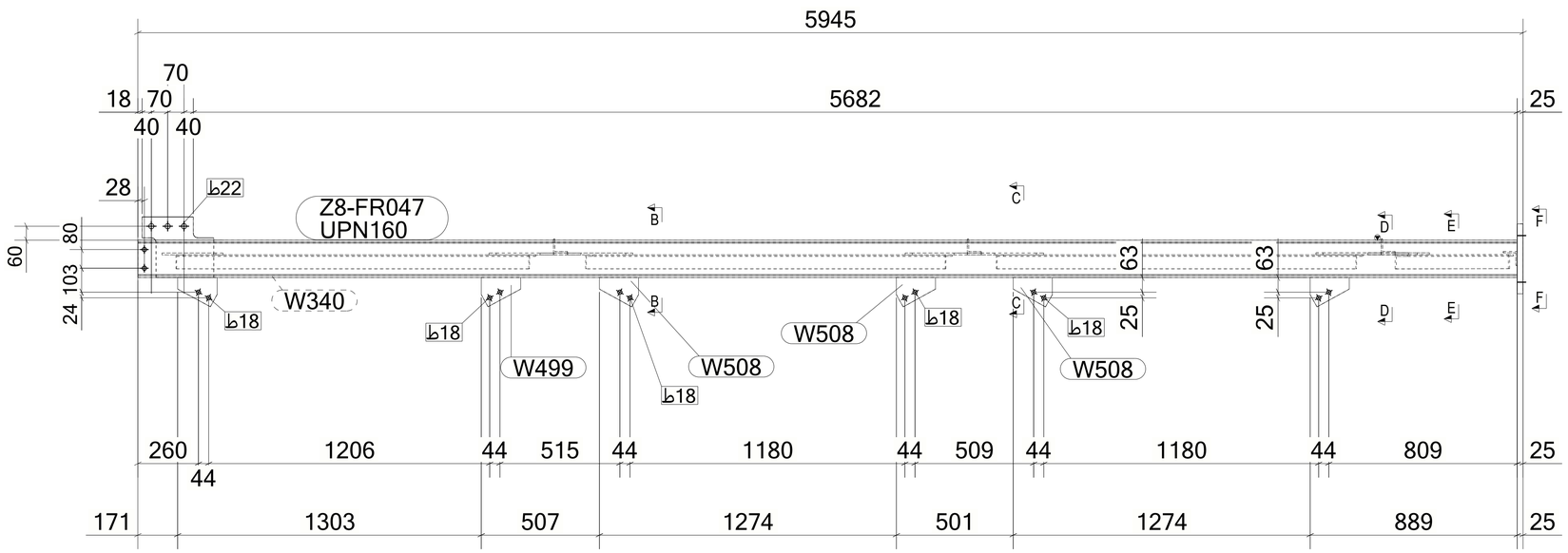

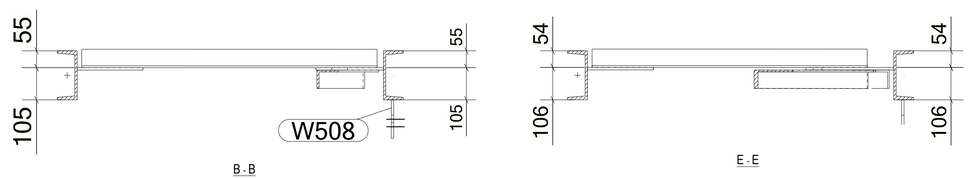

B - B

E - E

C - C

D - D

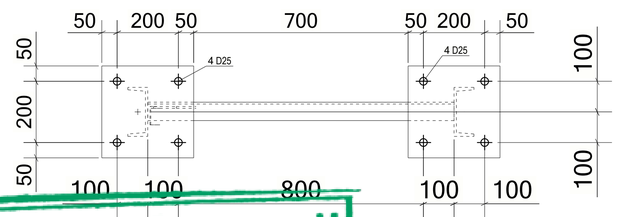

MATERIAL LIST FOR ASSEMBLY MK'D **Z8-FR047**

Mark	Profile	GRADE	No.	Length	Area	Weight
Z8-FR047	UPN160	S235JR	1	5920	3.26	111.53
W340	UPN160	S235JR	1	5920	3.26	111.53
W422	L60*6	S235JR	1	1000	0.24	5.37
W439	L60*6	S235JR	1	1028	0.25	5.47
W451	L60*6	S235JR	1	898	0.22	4.82
W452	L60*6	S235JR	2	1796	0.43	9.64
W457	L60*6	S235JR	1	957	0.23	5.14
W458	L60*6	S235JR	1	964	0.23	5.18
W459	L60*6	S235JR	1	1771	0.43	9.51
W488	PL10*260	S355JR	2	308	0.14	4.87
W497	PL25*300	S355JR	2	300	0.21	17.66
W499	PL8*125.8	S355JR	2	169	0.03	0.96
W508	PL8*126.3	S355JR	4	168	0.03	0.95
W509	PL8*169.2	S355JR	3	238	0.06	1.59
W510	PL8*228.2	S355JR	1	594	0.24	7.30
W511	PL8*132	S355JR	1	280	0.05	1.42
W528	PL8*220.8	S355JR	1	617	0.25	7.46
W529	PL8*286.7	S355JR	1	488	0.25	7.39
				Total	10.83	356.97

BOLT LIST:-

BOLT \ STUD	BOLT DESCRIPTION	QTY	FINISH

1 *REQUIRED AS DRAWN MARKED* **Z8-FR047**

GENERAL NOTES:

1. THE DIMENSIONS SHOWN ARE NOMINAL (IN MILLIMETERS), U.N.O.
2. WELD SIZESHALL BE AISC MINIMUM OF 6 mm UNLESS NOTED OTHERWISE.
3. ALL FIELD WELDS SHALL BE INSPECTED PER QUALITY ASSURANCE AND SPECIAL INSPECTIONS.

REFERENCE DRAWINGS

1	93M-BOA-NAT-LOT-04833
2	93M-BOA-NAT-LOT-09170
3	93M-BOA-NAT-LOT-01976
4	93M-BOA-NAT-LOT-20021
5	
6	
7	
8	
9	

6TH OF OCTOBER CITY RAIL TRANSIT MONORAIL

The Authority | Consultant: Hill International | Main Contractor: ORASCOM CONSTRUCTION / BOMBARDIER | Structural Designer: INNOVA TRANSPORTATION

KEY PLAN:

6 October Monorail
Engineering Unit
Valid For Construction

SCALE	SHOPDRAWING	DATE
AS SHOWN		12/05/2023

REV	DATE	DSG.	CHK.	APP.	AMENDMENTS	STATUS
B	12/05/2023	M.KH	M.KH	DR.M.M	ISSUED FOR INFORMATION	IFI
A	11/20/2022	M.KH	M.KH	DR.M.M	ISSUED FOR INFORMATION	IFI

DRAWING TITLE
6TH OF OCTOBER MONORAIL
SERVICE WALKWAYS
ZONE (1008)
Z8-FR047

Project Code	Rubric	Initiator	Lot	Ref	Number	Revision
93M	047	6ACC	60DEP	DWG	08225	B

Tekla structures

Same comments as
93M-0476-ACC-60DEP-DWG-08180-B.

REVIEWED WITH COMMENT
MONORAILS PROJECT

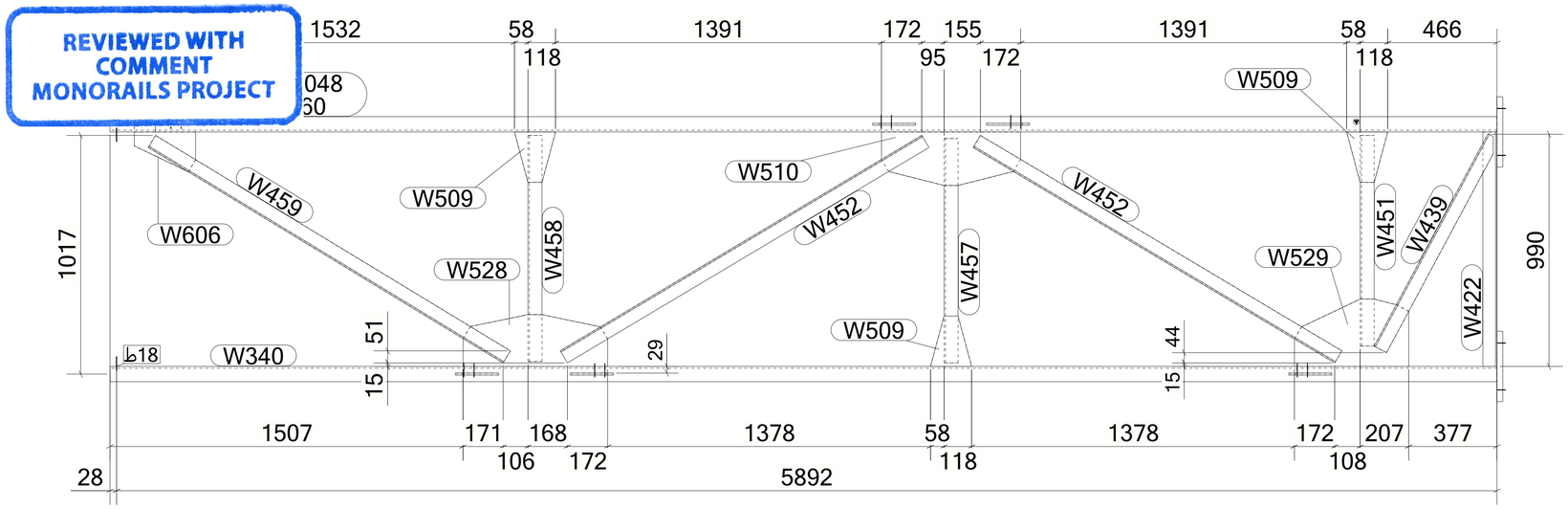

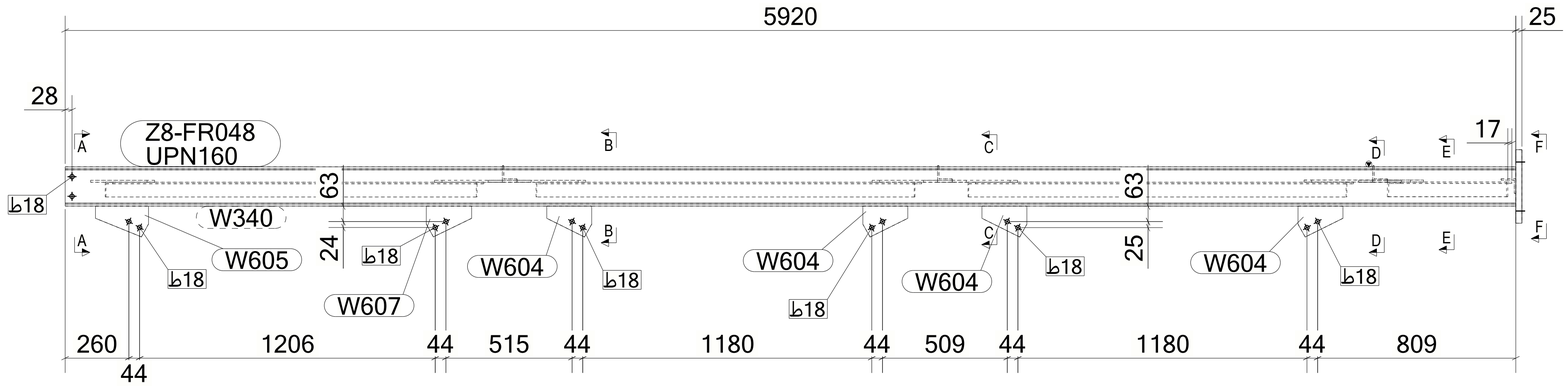

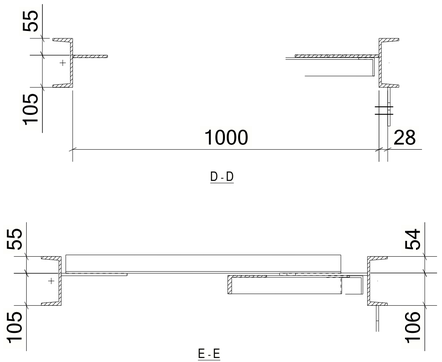

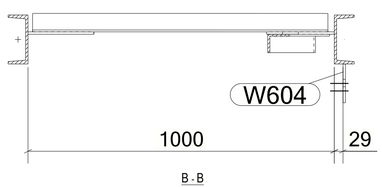

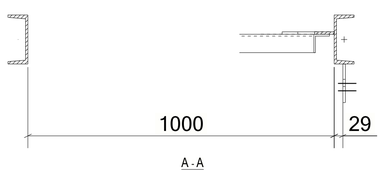

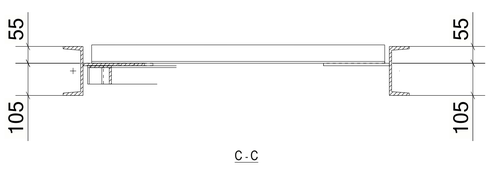

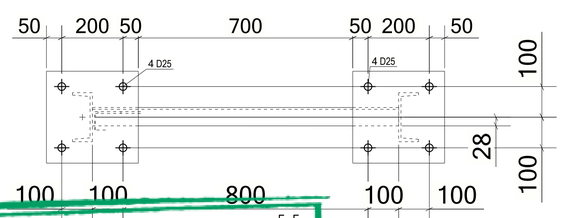

MATERIAL LIST FOR ASSEMBLY MK'D **Z8-FR048**

Mark	Profile	GRADE	No.	Length	Area	Weight
Z8-FR048	UPN160	S235JR	1	5920	3.26	111.53
W340	UPN160	S235JR	1	5920	3.26	111.53
W422	L60*6	S235JR	1	1000	0.24	5.37
W439	L60*6	S235JR	1	1028	0.25	5.47
W451	L60*6	S235JR	1	898	0.22	4.82
W452	L60*6	S235JR	2	1796	0.43	9.64
W457	L60*6	S235JR	1	957	0.23	5.14
W458	L60*6	S235JR	1	964	0.23	5.18
W459	L60*6	S235JR	1	1771	0.43	9.51
W497	PL25*300	S355JR	2	300	0.21	17.66
W509	PL8*169.2	S355JR	3	238	0.06	1.59
W510	PL8*228.2	S355JR	1	594	0.24	7.30
W528	PL8*220.8	S355JR	1	617	0.25	7.46
W529	PL8*286.9	S355JR	1	488	0.25	7.39
W604	PL8*126.3	S355JR	4	183	0.04	1.04
W605	PL8*125.8	S355JR	1	216	0.04	1.22
W606	PL8*170	S355JR	1	262	0.07	1.95
W607	PL8*125.8	S355JR	1	185	0.04	1.04
				Total	10.60	348.43

BOLT LIST:-

BOLT \ STUD	BOLT DESCRIPTION	QTY	FINISH

1 *REQUIRED AS DRAWN MARKED* **Z8-FR048**

GENERAL NOTES:

1. THE DIMENSIONS SHOWN ARE NOMINAL (IN MILLIMETERS), U.N.O.
2. WELD SIZESHALL BE AISC MINIMUM OF 6 mm UNLESS NOTED OTHERWISE.
3. ALL FIELD WELDS SHALL BE INSPECTED PER QUALITY ASSURANCE AND SPECIAL INSPECTIONS.

REFERENCE DRAWINGS

1	93M-BOA-NAT-LOT-04833
2	93M-BOA-NAT-LOT-09170
3	93M-BOA-NAT-LOT-01976
4	93M-BOA-NAT-LOT-20021
5	
6	
7	
8	
9	

6TH OF OCTOBER CITY RAIL TRANSIT MONORAIL

The Authority | Consultant: Hill International | Main Contractor: ORASCOM CONSTRUCTION / BOMBARDIER | Structural Designer: INNOVA TRANSPORTATION

KEY PLAN:

6 October Monorail
Engineering Unit
Valid For Construction

SCALE	SHOPDRAWING	DATE
AS SHOWN		12/05/2023

REV	DATE	DSG.	CHK.	APP.	AMENDMENTS	STATUS
B	12/05/2023	MKH	MKH	DRMM	ISSUED FOR INFORMATION	IFI
A	11/20/2022	MKH	MKH	DRMM	ISSUED FOR INFORMATION	IFI

DRAWING TITLE
6TH OF OCTOBER MONORAIL
SERVICE WALKWAYS
ZONE (1008)
Z8-FR048

Project Code	Rubric	Initiator	Lot	Ref	Number	Revision
93M	047	ACC	60	DEP	DWG 08226	B

Tekla structures

Same comments as
93M-0476-ACC-60DEP-DWG-08180-B.

REVIEWED WITH COMMENT
MONORAILS PROJECT

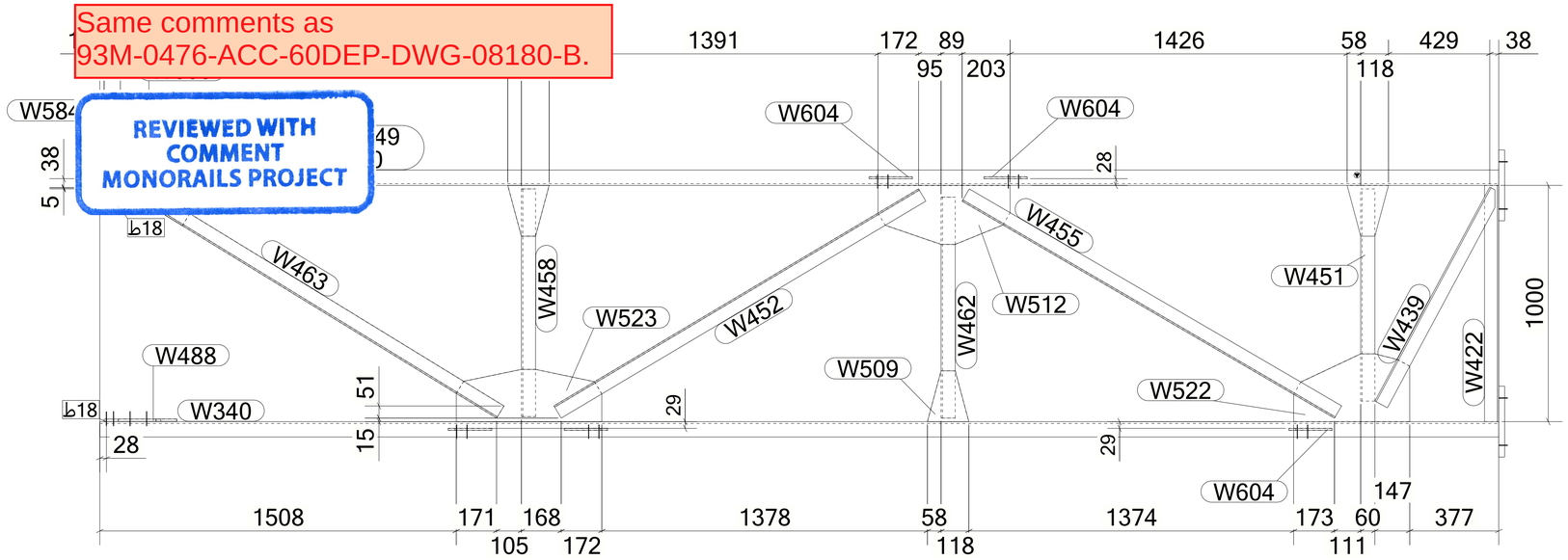

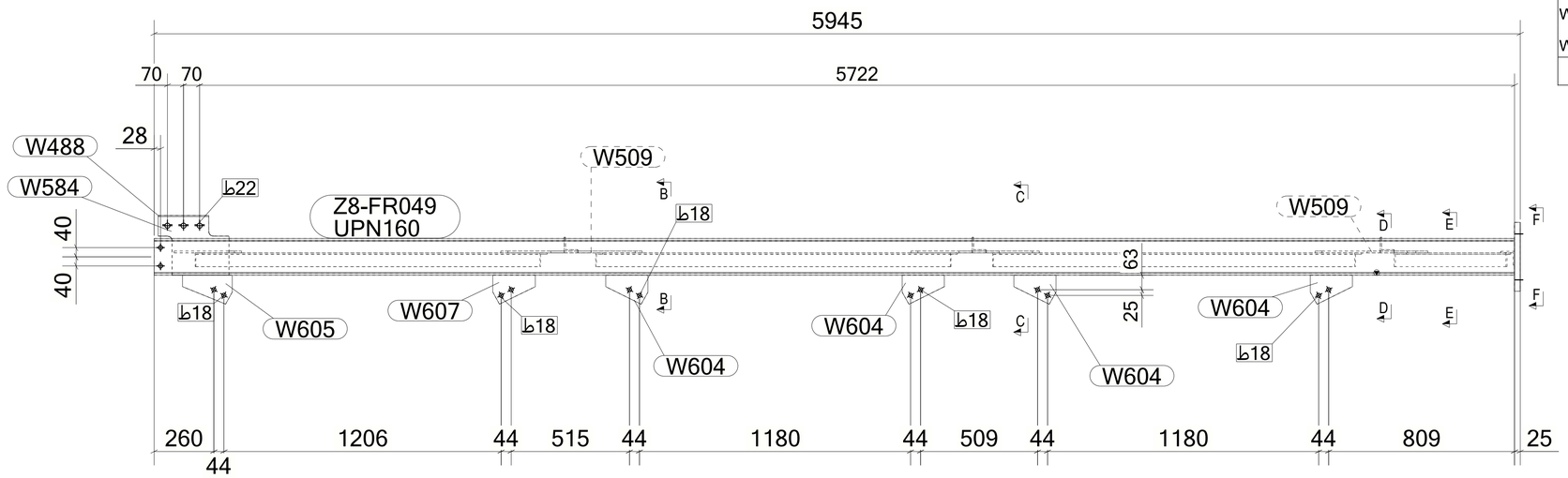

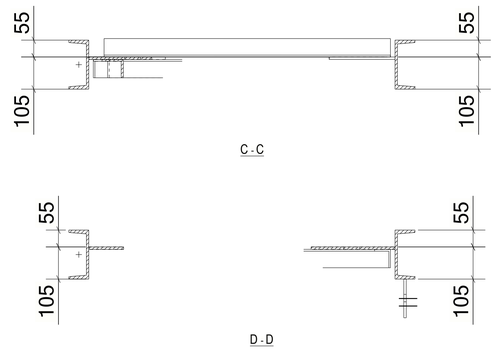

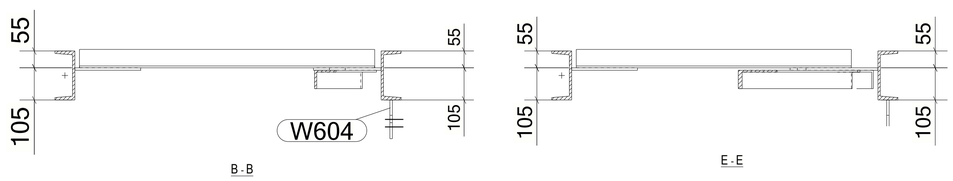

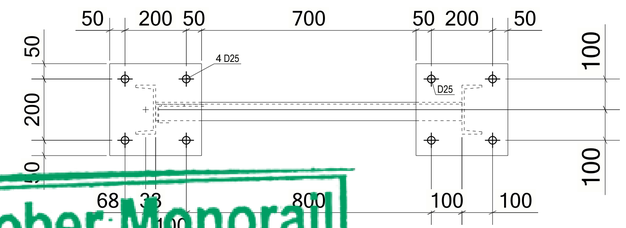

1 *REQUIRED AS DRAWN MARKED* **Z8-FR049**

MATERIAL LIST FOR ASSEMBLY MK'D **Z8-FR049**

Mark	Profile	GRADE	No.	Length	Area	Weight
Z8-FR049	UPN160	S235JR	1	5920	3.26	111.53
W340	UPN160	S235JR	1	5920	3.26	111.53
W422	L60*6	S235JR	1	1000	0.24	5.37
W439	L60*6	S235JR	1	1028	0.25	5.47
W451	L60*6	S235JR	1	898	0.22	4.82
W452	L60*6	S235JR	1	1796	0.43	9.64
W455	L60*6	S235JR	1	1824	0.44	9.79
W458	L60*6	S235JR	1	964	0.23	5.18
W462	L60*6	S235JR	1	935	0.23	5.02
W463	L60*6	S235JR	1	1759	0.42	9.45
W488	PL10*260	S355JR	1	308	0.14	4.87
W497	PL25*300	S355JR	2	300	0.21	17.66
W509	PL8*169.2	S355JR	3	238	0.06	1.59
W512	PL8*250	S355JR	1	559	0.24	7.24
W522	PL8*286.9	S355JR	1	491	0.25	7.43
W523	PL8*221.1	S355JR	1	616	0.25	7.45
W584	PL10*255	S355JR	1	308	0.13	4.79
W604	PL8*126.3	S355JR	4	183	0.04	1.04
W605	PL8*125.8	S355JR	1	216	0.04	1.22
W607	PL8*125.8	S355JR	1	185	0.04	1.04
W610	PL8*124.7	S355JR	1	308	0.05	1.40
				Total	10.85	357.48

BOLT LIST:-

BOLT \ STUD	BOLT DESCRIPTION	QTY	FINISH

GENERAL NOTES:

1. THE DIMENSIONS SHOWN ARE NOMINAL (IN MILLIMETERS), U.N.O.
2. WELD SIZESHALL BE AISC MINIMUM OF 6 mm UNLESS NOTED OTHERWISE.
3. ALL FIELD WELDS SHALL BE INSPECTED PER QUALITY ASSURANCE AND SPECIAL INSPECTIONS.

REFERENCE DRAWINGS

1	93M-BOA-NAT-LOT-04833
2	93M-BOA-NAT-LOT-09170
3	93M-BOA-NAT-LOT-01976
4	93M-BOA-NAT-LOT-20021
5	
6	
7	
8	
9	

6TH OF OCTOBER CITY RAIL TRANSIT MONORAIL

The Authority — Consultant: Hill International — Main Contractor — Structural Designer

KEY PLAN:

6 October Monorail
Engineering Unit
Valid For Construction

SCALE	SHOPDRAWING	DATE
AS SHOWN		12/05/2023

REV	DATE	DSG.	CHK.	APP.	AMENDMENTS	STATUS
B	12/05/2023	M.KH	M.KH	DR.M.M	ISSUED FOR INFORMATION	IFI
A	11/20/2022	M.KH	M.KH	DR.M.M	ISSUED FOR INFORMATION	IFI

DRAWING TITLE
6TH OF OCTOBER MONORAIL
SERVICE WALKWAYS
ZONE (1008)
Z8-FR049

Project Code	Rubric	Initiator	Lot	Ref	Number	Revision
93M	047	6ACC	60DE	PDWG	08227	B

Tekla structures

Same comments as
93M-0476-ACC-60DEP-DWG-08180-B.

REVIEWED WITH COMMENT
MONORAILS PROJECT

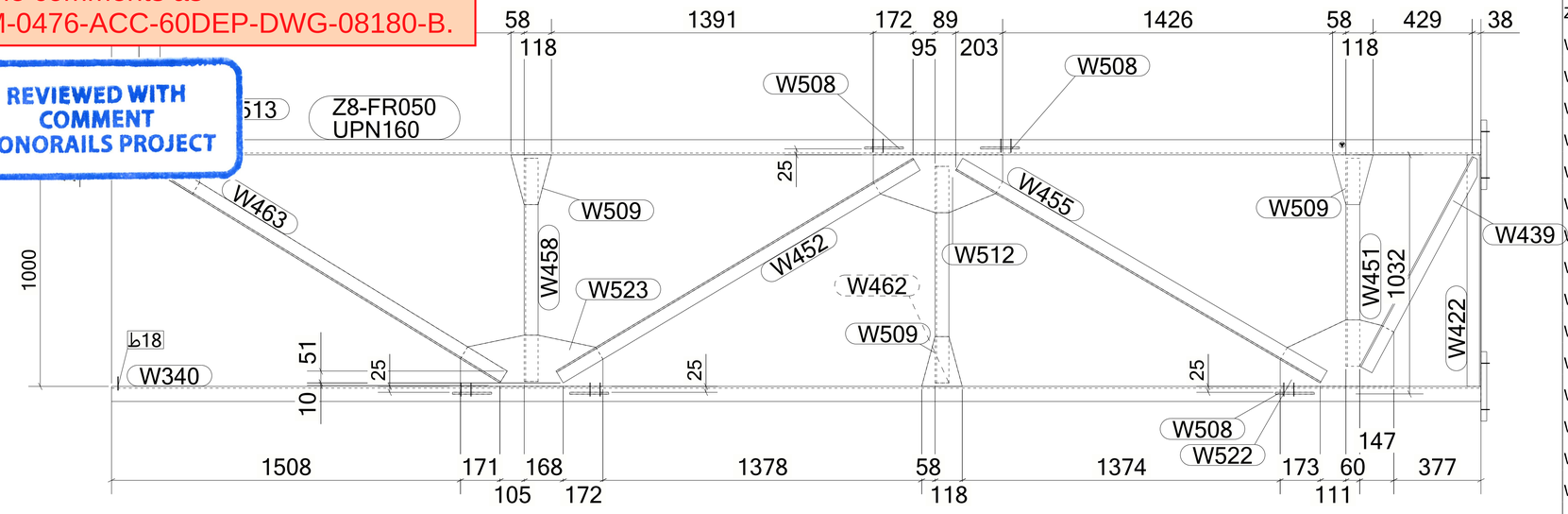

MATERIAL LIST FOR ASSEMBLY MK'D **Z8-FR050**						
Mark	Profile	GRADE	No.	Length	Area	Weight
Z8-FR050	UPN160	S235JR	1	5920	3.26	111.53
W340	UPN160	S235JR	1	5920	3.26	111.53
W422	L60*6	S235JR	1	1000	0.24	5.37
W439	L60*6	S235JR	1	1028	0.25	5.47
W451	L60*6	S235JR	1	898	0.22	4.82
W452	L60*6	S235JR	1	1796	0.43	9.64
W455	L60*6	S235JR	1	1824	0.44	9.79
W458	L60*6	S235JR	1	964	0.23	5.18
W462	L60*6	S235JR	1	935	0.23	5.02
W463	L60*6	S235JR	1	1759	0.42	9.45
W497	PL25*300	S355JR	2	300	0.21	17.66
W499	PL8*125.8	S355JR	2	169	0.03	0.96
W508	PL8*126.3	S355JR	4	168	0.03	0.95
W509	PL8*169.2	S355JR	3	238	0.06	1.59
W512	PL8*250	S355JR	1	559	0.24	7.24
W513	PL8*162	S355JR	1	286	0.06	1.74
W522	PL8*286.9	S355JR	1	491	0.25	7.43
W523	PL8*221.1	S355JR	1	616	0.25	7.45
				Total	10.57	347.47

BOLT LIST:-

BOLT \ STUD	BOLT DESCRIPTION	QTY	FINISH

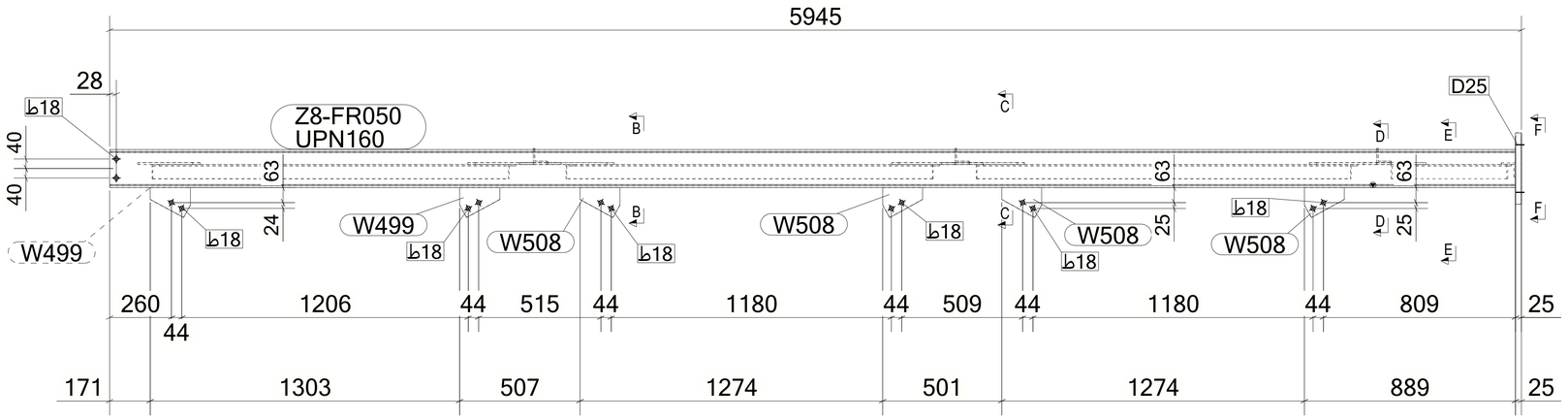

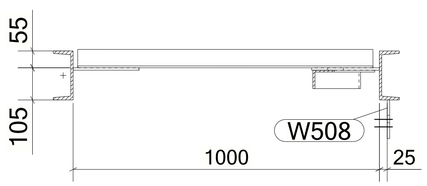

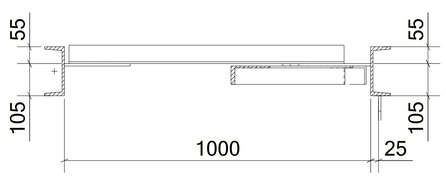

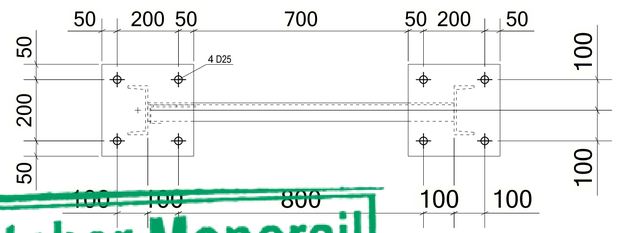

1 *REQUIRED AS DRAWN MARKED* **Z8-FR050**

6 October Monorail
Engineering Unit
Valid For Construction

GENERAL NOTES:

1. THE DIMENSIONS SHOWN ARE NOMINAL (IN MILLIMETERS), U.N.O.
2. WELD SIZESHALL BE AISC MINIMUM OF 6 mm UNLESS NOTED OTHERWISE.
3. ALL FIELD WELDS SHALL BE INSPECTED PER QUALITY ASSURANCE AND SPECIAL INSPECTIONS.

REFERENCE DRAWINGS

1	93M-BOA-NAT-LOT-04833
2	93M-BOA-NAT-LOT-09170
3	93M-BOA-NAT-LOT-01976
4	93M-BOA-NAT-LOT-20021
5	
6	
7	
8	
9	

6TH OF OCTOBER CITY RAIL TRANSIT MONORAIL

The Authority | Consultant: Hill International | Main Contractor: ORASCOM CONSTRUCTION / BOMBARDIER | Structural Designer: INNOVA TRANSPORTATION

KEY PLAN:

SCALE	SHOPDRAWING	DATE
AS SHOWN		12/05/2023

REV	DATE	DSG.	CHK.	APP.	AMENDMENTS	STATUS
B	12/05/2023	M.KH	M.KH	DR.M.M	ISSUED FOR INFORMATION	IFI
A	11/20/2022	M.KH	M.KH	DR.M.M	ISSUED FOR INFORMATION	IFI

DRAWING TITLE
6TH OF OCTOBER MONORAIL
SERVICE WALKWAYS
ZONE (1008)
Z8-FR050

Project Code	Rubric	Initiator	Lot	Ref	Number	Revision
93M	047	6ACC	60DE	PDWG	08228	B

Tekla structures

Approval is subject to approval of coordination package between multi-discipline.

REVIEWED WITH COMMENT
MONORAILS PROJECT

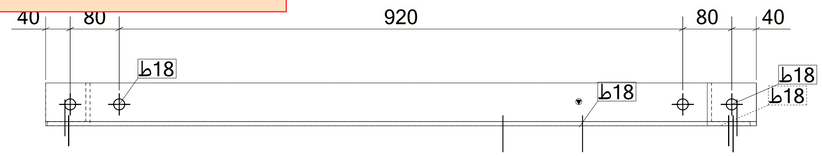

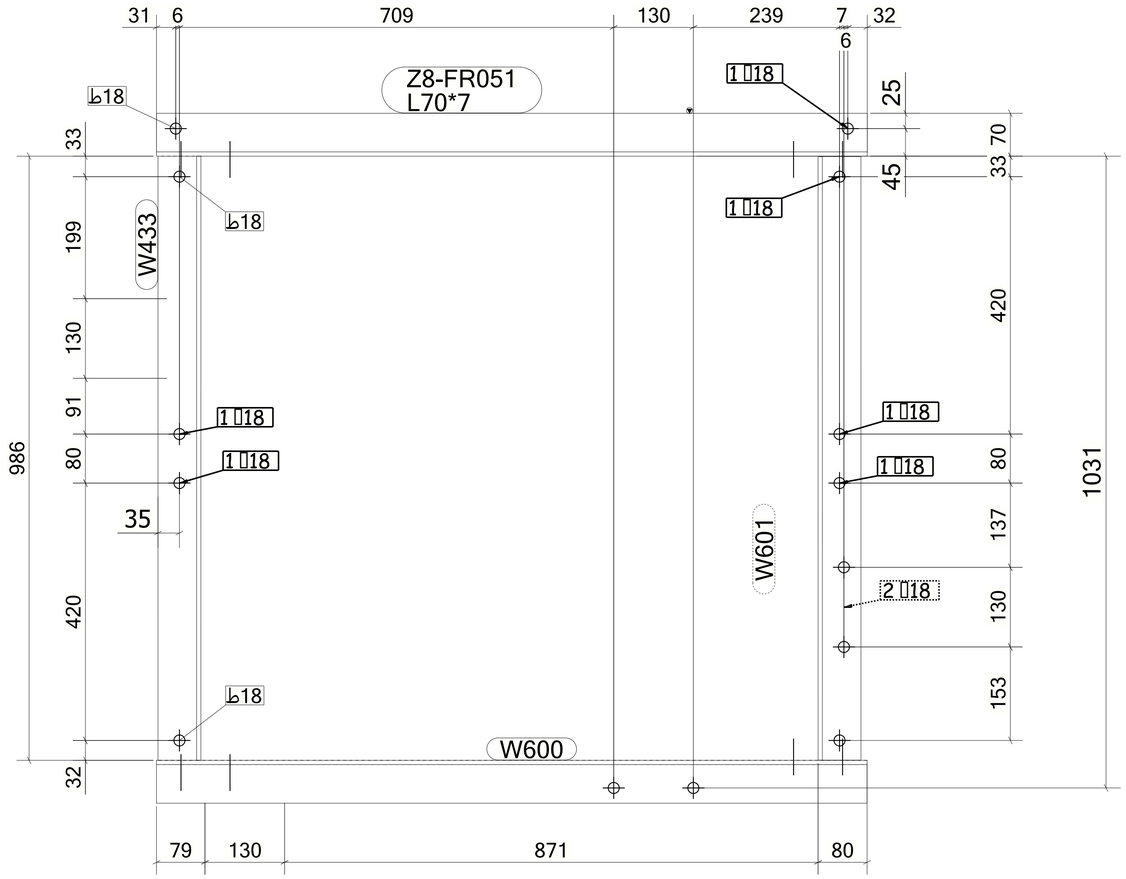

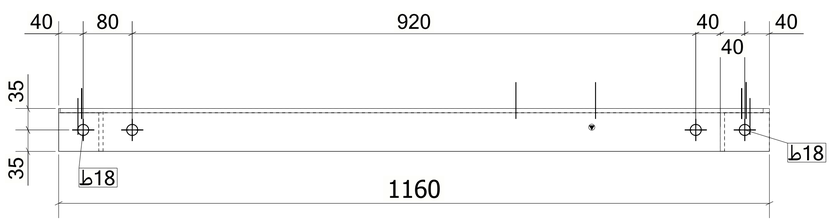

1 *REQUIRED AS DRAWN MARKED* **Z8-FR051**

MATERIAL LIST FOR ASSEMBLY MK'D **Z8-FR051**

Mark	Profile	GRADE	No.	Length	Area	Weight
Z8-FR051	L70*7	S235JR	1	1160	0.33	8.48
W433	L70*7	S235JR	1	986	0.28	7.20
W600	L70*7	S235JR	1	1160	0.33	8.48
W601	L70*7	S235JR	1	985	0.28	7.20
				Total	1.21	31.36

BOLT LIST:-

BOLT \ STUD	BOLT DESCRIPTION		QTY	FINISH
BOLT	B1N2W 16 X 40	A325M	2	
BOLT	B1N2W 16 X 50	A325M	8	

GENERAL NOTES:

1. THE DIMENSIONS SHOWN ARE NOMINAL (IN MILLIMETERS), U.N.O.
2. WELD SIZESHALL BE AISC MINIMUM OF 6 mm UNLESS NOTED OTHERWISE.
3. ALL FIELD WELDS SHALL BE INSPECTED PER QUALITY ASSURANCE AND SPECIAL INSPECTIONS.

REFERENCE DRAWINGS

1	93M-BOA-NAT-LOT-04833
2	93M-BOA-NAT-LOT-09170
3	93M-BOA-NAT-LOT-01976
4	93M-BOA-NAT-LOT-20021
5	
6	
7	
8	
9	

6TH OF OCTOBER CITY RAIL TRANSIT MONORAIL

The Authority | Consultant: Hill International | Main Contractor: ORASCOM CONSTRUCTION / BOMBARDIER | Structural Designer: INNOVA TRANSPORTATION

KEY PLAN:

6 October Monorail
Engineering Unit
Valid For Construction

SCALE	SHOPDRAWING	DATE
AS SHOWN		12/05/2023

REV	DATE	DSG.	CHK.	APP.	AMENDMENTS	STATUS
B	12/05/2023	MKH	MKH	DRMM	ISSUED FOR INFORMATION	IFI
A	11/20/2022	MKH	MKH	DRMM	ISSUED FOR INFORMATION	IFI

DRAWING TITLE
6TH OF OCTOBER MONORAIL
SERVICE WALKWAYS
ZONE (1008)
Z8-FR051

Project Code	Rubric	Initiator	Lot	Ref	Number	Revision
93M	047	6ACC	60DE	PDWG	08229	B

Tekla structures

Approval is subject to approval of coordination package between multi-discipline.

REVIEWED WITH COMMENT MONORAILS PROJECT

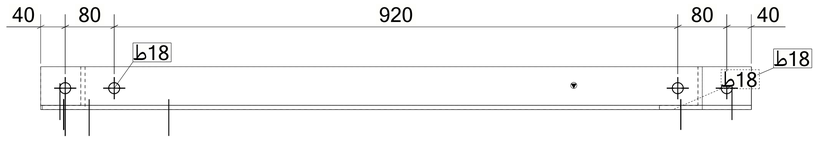

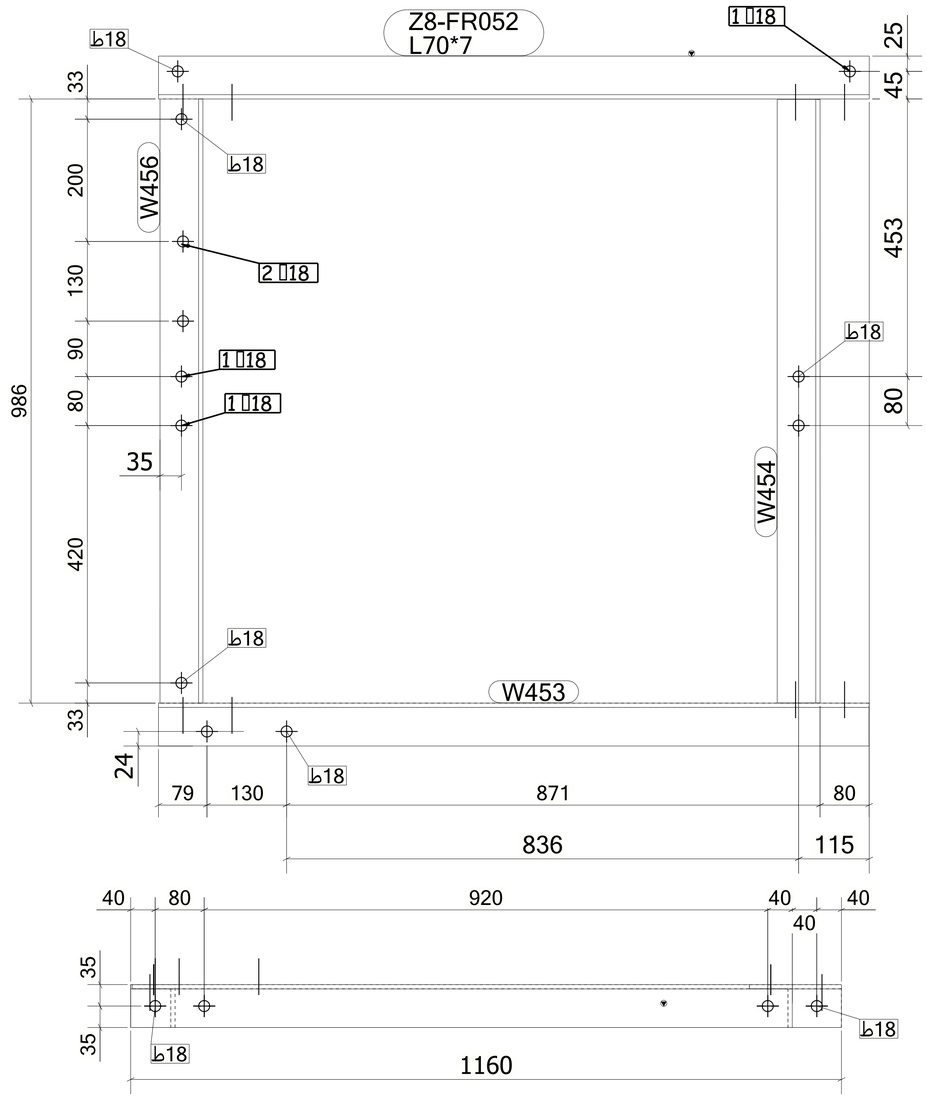

1 *REQUIRED AS DRAWN MARKED* **Z8-FR052**

MATERIAL LIST FOR ASSEMBLY MK'D **Z8-FR052**

Mark	Profile	GRADE	No.	Length	Area	Weight
Z8-FR052	L70*7	S235JR	1	1160	0.33	8.48
W453	L70*7	S235JR	1	1160	0.33	8.48
W454	L70*7	S235JR	1	985	0.28	7.20
W456	L70*7	S235JR	1	986	0.28	7.20
				Total	1.21	31.36

BOLT LIST:-

BOLT \ STUD	BOLT DESCRIPTION		QTY	FINISH
BOLT	B1N2W 16 X 50	A325M	8	

GENERAL NOTES:

1. THE DIMENSIONS SHOWN ARE NOMINAL (IN MILLIMETERS), U.N.O.
2. WELD SIZESHALL BE AISC MINIMUM OF 6 mm UNLESS NOTED OTHERWISE.
3. ALL FIELD WELDS SHALL BE INSPECTED PER QUALITY ASSURANCE AND SPECIAL INSPECTIONS.

REFERENCE DRAWINGS

1	93M-BOA-NAT-LOT-04833
2	93M-BOA-NAT-LOT-09170
3	93M-BOA-NAT-LOT-01976
4	93M-BOA-NAT-LOT-20021
5	
6	
7	
8	
9	

6TH OF OCTOBER CITY RAIL TRANSIT MONORAIL

The Authority | Hill International Consultant | ORASCOM BOMBARDIER Main Contractor | INNOVA Structural Designer

KEY PLAN:

6 October Monorail Engineering Unit Valid For Construction

SCALE	SHOPDRAWING	DATE
AS SHOWN		12/05/2023

REV	DATE	DSG.	CHK.	APP.	AMENDMENTS	STATUS
B	12/05/2023	M.KH	M.KH	DR.M.M	ISSUED FOR INFORMATION	IFI
A	11/20/2022	M.KH	M.KH	DR.M.M	ISSUED FOR INFORMATION	IFI

DRAWING TITLE
6TH OF OCTOBER MONORAIL SERVICE WALKWAYS ZONE (1008)
Z8-FR052

Project Code	Rubric	Initiator	Lot	Ref	Number	Revision
93M	0476	ACC	60DEP	DWG	08230	B

Tekla structures

Same comments as
93M-0476-ACC-60DEP-DWG-08180-B.

REVIEWED WITH COMMENT
MONORAILS PROJECT

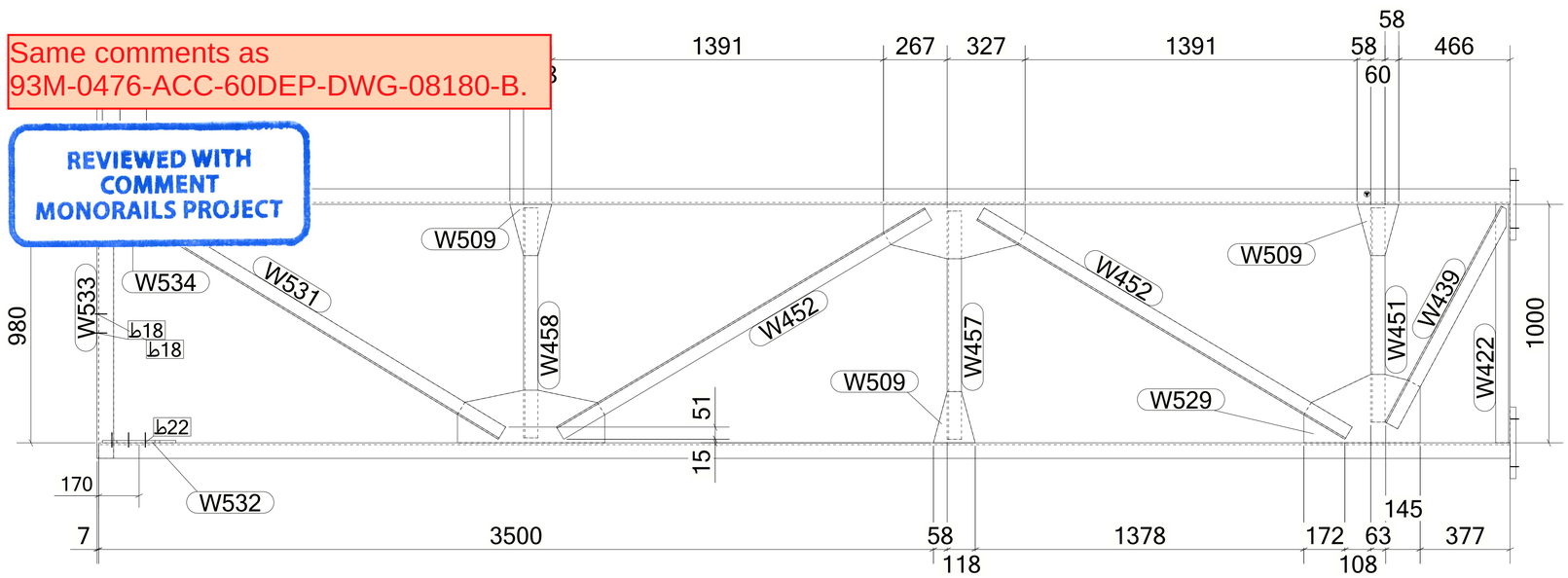

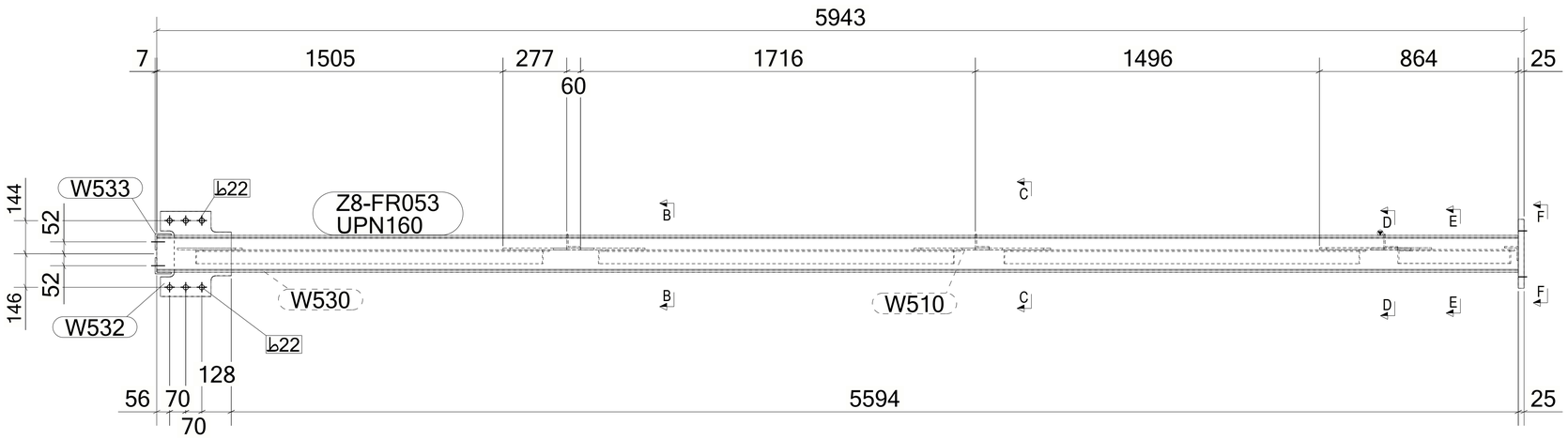

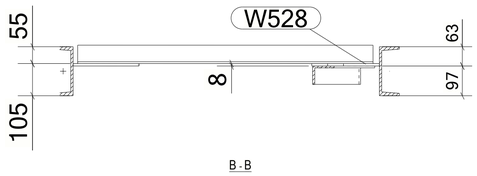

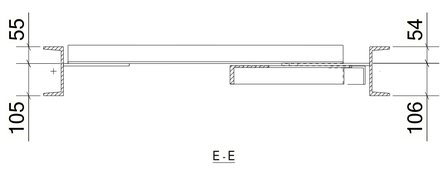

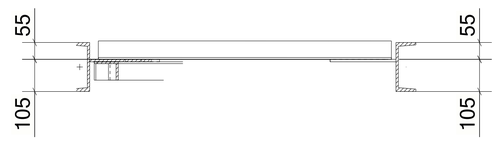

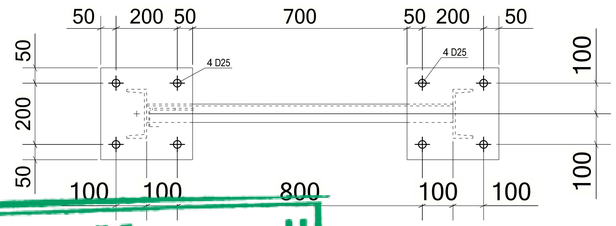

MATERIAL LIST FOR ASSEMBLY MK'D **Z8-FR053**

Mark	Profile	GRADE	No.	Length	Area	Weight
Z8-FR053	UPN160	S235JR	1	5918	3.25	111.50
W422	L60*6	S235JR	1	1000	0.24	5.37
W439	L60*6	S235JR	1	1028	0.25	5.47
W451	L60*6	S235JR	1	898	0.22	4.82
W452	L60*6	S235JR	2	1796	0.43	9.64
W457	L60*6	S235JR	1	957	0.23	5.14
W458	L60*6	S235JR	1	964	0.23	5.18
W497	PL25*300	S355JR	2	300	0.21	17.66
W509	PL8*169.2	S355JR	3	238	0.06	1.59
W510	PL8*228.2	S355JR	1	594	0.24	7.30
W528	PL8*220.8	S355JR	1	617	0.25	7.46
W529	PL8*286.9	S355JR	1	488	0.25	7.39
W530	UPN160	S235JR	1	5918	3.25	111.50
W531	L60*6	S235JR	1	1762	0.42	9.46
W532	PL10*307.8	S355JR	2	370	0.19	6.78
W533	L70*7	S235JR	2	1130	0.32	8.26
W534	PL8*131.9	S355JR	1	300	0.05	1.49
				Total	11.36	371.53

BOLT LIST:-

BOLT \ STUD	BOLT DESCRIPTION	QTY	FINISH
BOLT	B1N2W20 X 50 A325M	3	

1 *REQUIRED AS DRAWN MARKED* **Z8-FR053**

6 October Monorail
Engineering Unit
Valid For Construction

GENERAL NOTES:

1. THE DIMENSIONS SHOWN ARE NOMINAL (IN MILLIMETERS), U.N.O.
2. WELD SIZESHALL BE AISC MINIMUM OF 6 mm UNLESS NOTED OTHERWISE.
3. ALL FIELD WELDS SHALL BE INSPECTED PER QUALITY ASSURANCE AND SPECIAL INSPECTIONS.

REFERENCE DRAWINGS

1	93M-BOA-NAT-LOT-04833
2	93M-BOA-NAT-LOT-09170
3	93M-BOA-NAT-LOT-01976
4	93M-BOA-NAT-LOT-20021
5	
6	
7	
8	
9	

6TH OF OCTOBER CITY RAIL TRANSIT MONORAIL

The Authority | Consultant: Hill International | Main Contractor: ORASCOM CONSTRUCTION, BOMBARDIER | Structural Designer: INNOVA TRANSPORTATION

KEY PLAN:

SCALE	SHOPDRAWING	DATE
AS SHOWN		12/05/2023

REV	DATE	DSG.	CHK.	APP.	AMENDMENTS	STATUS
B	12/05/2023	M.KH	M.KH	DR.M.M	ISSUED FOR INFORMATION	IFI
A	11/20/2022	M.KH	M.KH	DR.M.M	ISSUED FOR INFORMATION	IFI

DRAWING TITLE
6TH OF OCTOBER MONORAIL
SERVICE WALKWAYS
ZONE (1008)
Z8-FR053

Project Code	Rubric	Initiator	Lot	Ref	Number	Revision
93M0476	ACC	60DEP	DWG	08231		B

Tekla structures

Approval is subject to approval of coordination package between multi-discipline.

REVIEWED WITH COMMENT
MONORAILS PROJECT

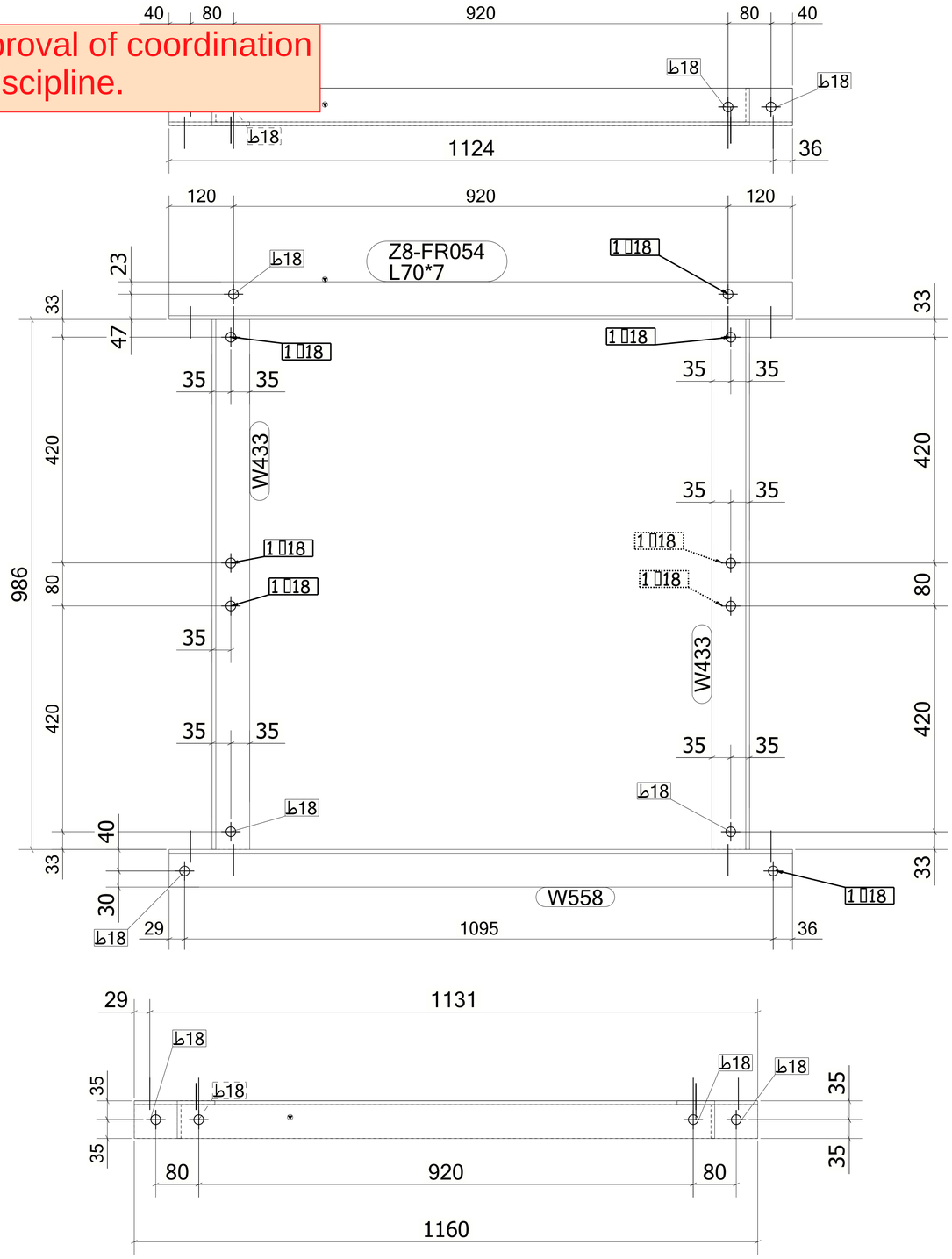

MATERIAL LIST FOR ASSEMBLY MK'D **Z8-FR054**

Mark	Profile	GRADE	No.	Length	Area	Weight
Z8-FR054	L70*7	S235JR	1	1160	0.33	8.48
W433	L70*7	S235JR	2	986	0.28	7.21
W558	L70*7	S235JR	1	1160	0.33	8.48
				Total	1.21	31.37

BOLT LIST:-

BOLT \ STUD	BOLT DESCRIPTION	QTY	FINISH
BOLT	B1N2W 16 X 50 A325M	10	

1 *REQUIRED AS DRAWN MARKED* **Z8-FR054**

GENERAL NOTES:

1. THE DIMENSIONS SHOWN ARE NOMINAL (IN MILLIMETERS), U.N.O.
2. WELD SIZESHALL BE AISC MINIMUM OF 6 mm UNLESS NOTED OTHERWISE.
3. ALL FIELD WELDS SHALL BE INSPECTED PER QUALITY ASSURANCE AND SPECIAL INSPECTIONS.

REFERENCE DRAWINGS

1	93M-BOA-NAT-LOT-04833
2	93M-BOA-NAT-LOT-09170
3	93M-BOA-NAT-LOT-01976
4	93M-BOA-NAT-LOT-20021
5	
6	
7	
8	
9	

6TH OF OCTOBER CITY RAIL TRANSIT MONORAIL

The Authority | Consultant: Hill International | Main Contractor: ORASCOM CONSTRUCTION / BOMBARDIER | Structural Designer: INNOVA TRANSPORTATION

KEY PLAN:

6 October Monorail
Engineering Unit
Valid For Construction

SCALE	SHOPDRAWING	DATE
AS SHOWN		12/05/2023

REV	DATE	DSG.	CHK.	APP.	AMENDMENTS	STATUS
B	12/05/2023	M.KH	M.KH	DR.M.M	ISSUED FOR INFORMATION	IFI
A	11/20/2022	M.KH	M.KH	DR.M.M	ISSUED FOR INFORMATION	IFI

DRAWING TITLE
6TH OF OCTOBER MONORAIL
SERVICE WALKWAYS
ZONE (1008)
Z8-FR054

Project Code	Rubric	Initiator	Lot	Ref	Number	Revision
93	M04	76	ACC60	DEP	DWG0823	2 B

Tekla structures

Approval is subject to approval of coordination package between multi-discipline.

REVIEWED WITH COMMENT
MONORAILS PROJECT

MATERIAL LIST FOR ASSEMBLY MK'D **Z8-FR055**

Mark	Profile	GRADE	No.	Length	Area	Weight
Z8-FR055	L70*7	S235JR	1	986	0.28	7.20
W646	L70*7	S235JR	1	986	0.28	7.20
W665	L70*7	S235JR	1	966	0.27	7.06
W666	L70*7	S235JR	1	966	0.27	7.06
				Total	1.10	28.52

BOLT LIST:-

BOLT \ STUD	BOLT DESCRIPTION	QTY	FINISH
BOLT	B1N2W 16 X 50 A325M	10	

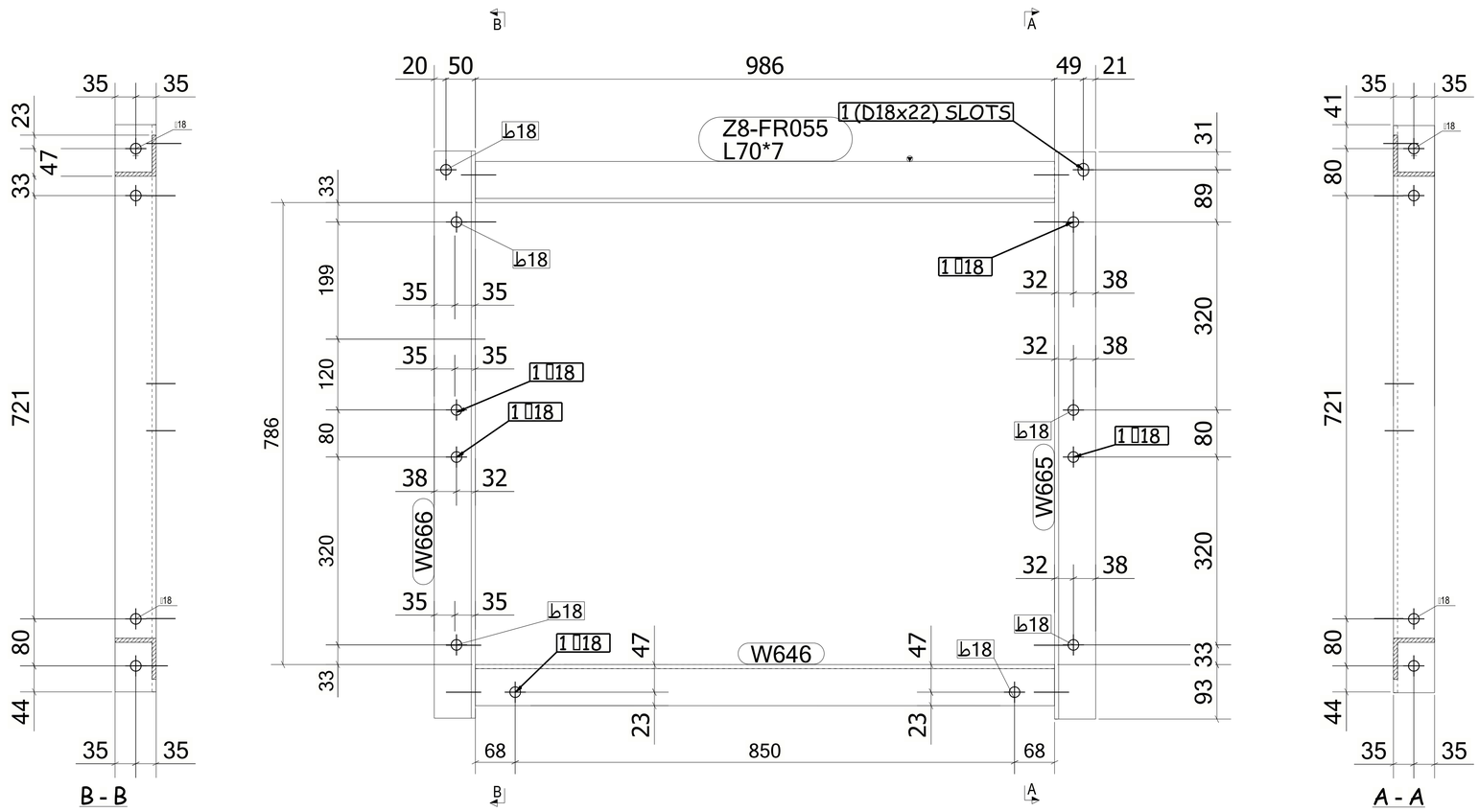

1 *REQUIRED AS DRAWN MARKED* **Z8-FR055**

6 October Monorail
Engineering Unit
Valid For Construction

GENERAL NOTES:

1. THE DIMENSIONS SHOWN ARE NOMINAL (IN MILLIMETERS), U.N.O.
2. WELD SIZESHALL BE AISC MINIMUM OF 6 mm UNLESS NOTED OTHERWISE.
3. ALL FIELD WELDS SHALL BE INSPECTED PER QUALITY ASSURANCE AND SPECIAL INSPECTIONS.

REFERENCE DRAWINGS

1	93M-BOA-NAT-LOT-04833
2	93M-BOA-NAT-LOT-09170
3	93M-BOA-NAT-LOT-01976
4	93M-BOA-NAT-LOT-20021
5	
6	
7	
8	
9	

6TH OF OCTOBER CITY RAIL TRANSIT MONORAIL

The Authority | Consultant: Hill International | Main Contractor: ORASCOM CONSTRUCTION / BOMBARDIER | Structural Designer: INNOVA TRANSPORTATION

KEY PLAN:

SCALE: AS SHOWN | SHOPDRAWING | DATE: 12/05/2023

REV	DATE	DSG.	CHK.	APP.	AMENDMENTS	STATUS
B	12/05/2023	M.KH	M.KH	DR.M.M	ISSUED FOR INFORMATION	IFI
A	11/20/2022	M.KH	M.KH	DR.M.M	ISSUED FOR INFORMATION	IFI

DRAWING TITLE
6TH OF OCTOBER MONORAIL
SERVICE WALKWAYS
ZONE (1008)
Z8-FR055

Project Code	Rubric	Initiator	Lot	Ref	Number	Revision
93M	047	6ACC	60DE	PDWG	08233	B

Tekla structures

Approval is subject to approval of coordination package between multi-discipline.

REVIEWED WITH COMMENT
MONORAILS PROJECT

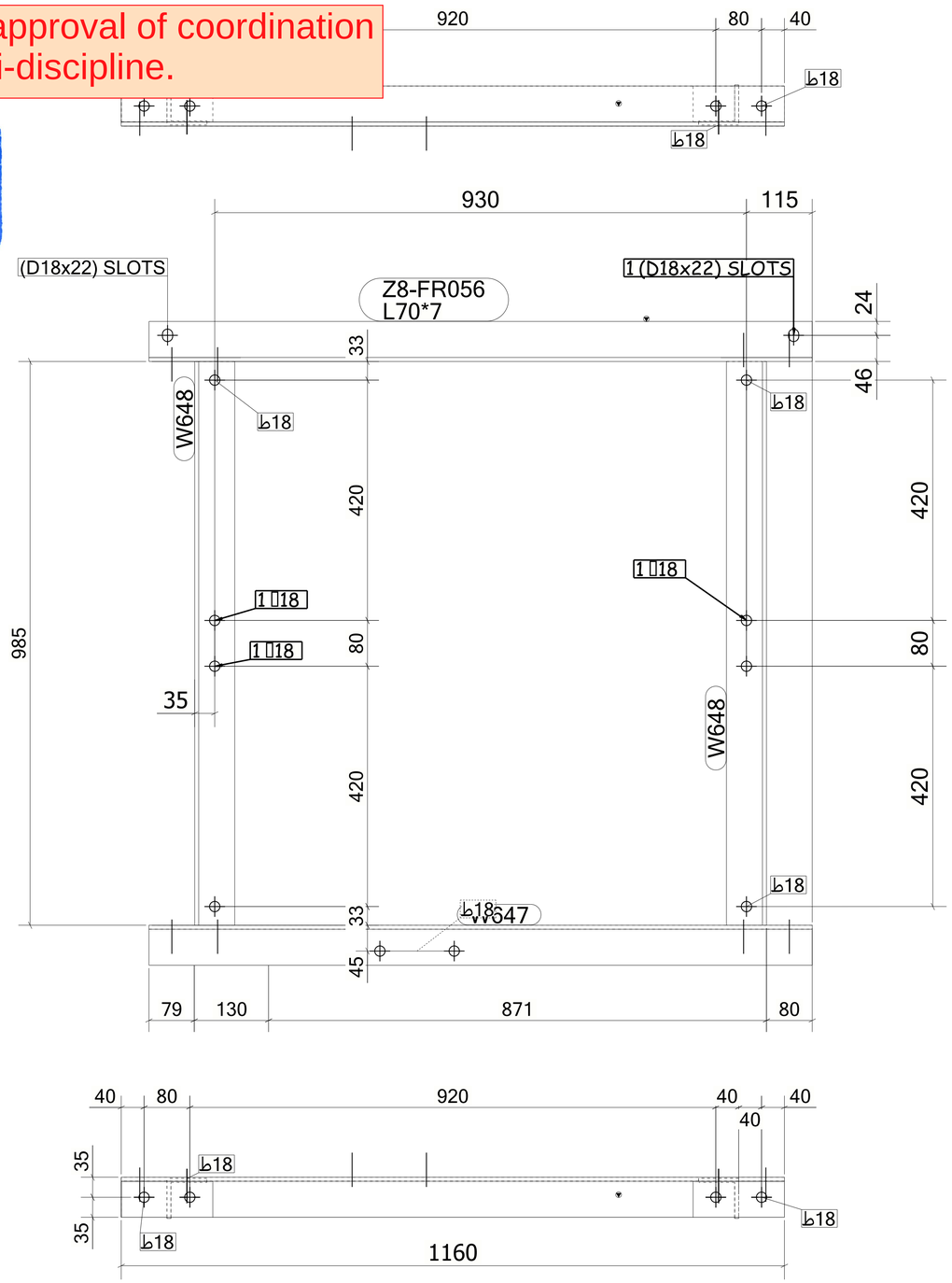

MATERIAL LIST FOR ASSEMBLY MK'D **Z8-FR056**						
Mark	Profile	GRADE	No.	Length	Area	Weight
Z8-FR056	L70*7	S235JR	1	1160	0.33	8.43
W647	L70*7	S235JR	1	1160	0.33	8.48
W648	L70*7	S235JR	2	985	0.28	7.20
				Total	1.21	31.31

BOLT LIST:-

BOLT \ STUD	BOLT DESCRIPTION	QTY	FINISH
BOLT	B1N2W 16 X 50 A325M	10	

1 *REQUIRED AS DRAWN MARKED* **Z8-FR056**

GENERAL NOTES:

1. THE DIMENSIONS SHOWN ARE NOMINAL (IN MILLIMETERS), U.N.O.
2. WELD SIZESHALL BE AISC MINIMUM OF 6 mm UNLESS NOTED OTHERWISE.
3. ALL FIELD WELDS SHALL BE INSPECTED PER QUALITY ASSURANCE AND SPECIAL INSPECTIONS.

REFERENCE DRAWINGS

1	93M-BOA-NAT-LOT-04833
2	93M-BOA-NAT-LOT-09170
3	93M-BOA-NAT-LOT-01976
4	93M-BOA-NAT-LOT-20021
5	
6	
7	
8	
9	

6TH OF OCTOBER CITY RAIL TRANSIT MONORAIL

The Authority | Consultant: Hill International | Main Contractor: ORASCOM CONSTRUCTION, BOMBARDIER | Structural Designer: INNOVA TRANSPORTATION

KEY PLAN:

6 October Monorail
Engineering Unit
Valid For Construction

SCALE	SHOPDRAWING	DATE
AS SHOWN		12/05/2023

REV	DATE	DSG.	CHK.	APP.	AMENDMENTS	STATUS
B	12/05/2023	M.KH	M.KH	DR.M.M	ISSUED FOR INFORMATION	IFI
A	11/20/2022	M.KH	M.KH	DR.M.M	ISSUED FOR INFORMATION	IFI

DRAWING TITLE
6TH OF OCTOBER MONORAIL
SERVICE WALKWAYS
ZONE (1008)
Z8-FR056

Project Code	Rubric	Initiator	Lot	Ref	Number	Revision
93M	047	ACC	60DEP	DWG	0823	4 B

Tekla structures

Same comments as
93M-0476-ACC-60DEP-DWG-08180-B.

REVIEWED WITH COMMENT
MONORAILS PROJECT

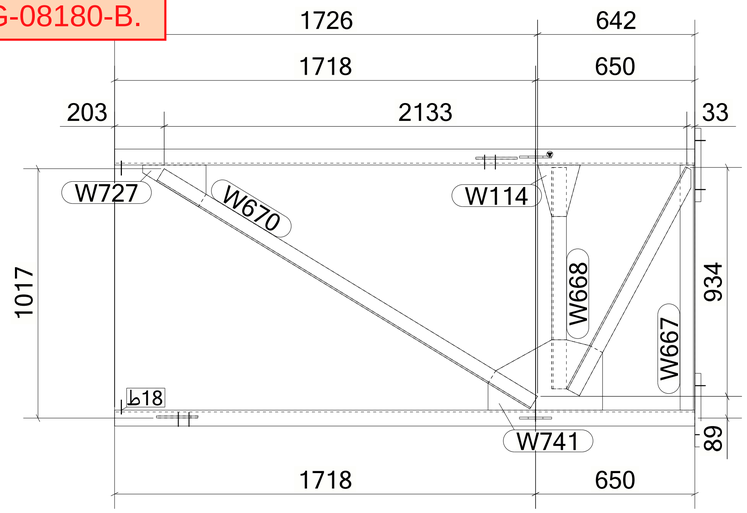

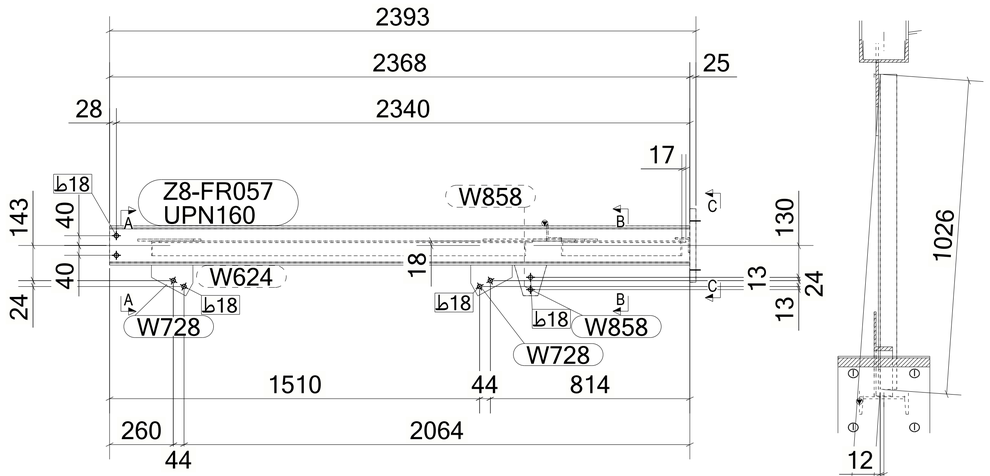

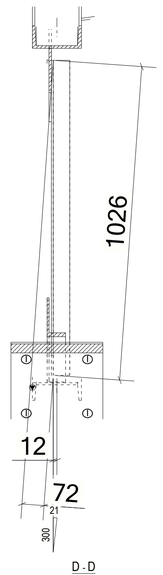

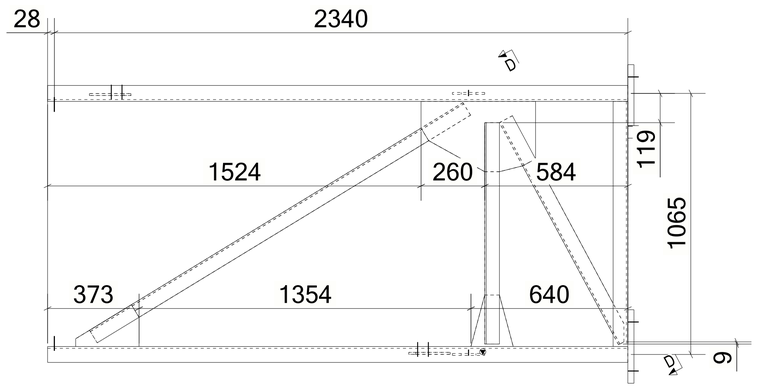

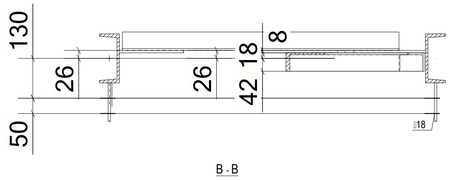

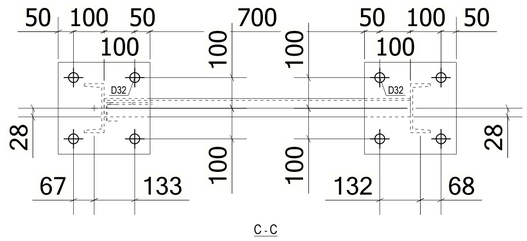

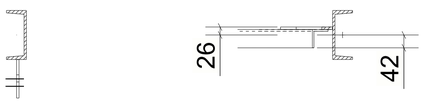

MATERIAL LIST FOR ASSEMBLY MK'D **Z8-FR057**

Mark	Profile	GRADE	No.	Length	Area	Weight
Z8-FR057	UPN160	S235JR	1	2368	1.30	44.61
W114	PL8*166.7	S355JR	1	233	0.05	1.53
W624	UPN160	S235JR	1	2368	1.30	44.61
W667	L60*6	S235JR	1	1000	0.24	5.37
W668	L60*6	S235JR	1	903	0.22	4.85
W669	L60*6	S235JR	1	1028	0.25	5.47
W670	L60*6	S235JR	1	1784	0.43	9.58
W726	PL25*300	S355JR	2	300	0.21	17.66
W727	PL8*161.7	S355JR	1	283	0.06	1.73
W728	PL8*125.8	S355JR	2	169	0.03	0.96
W741	PL8*286.9	S355-JR	1	467	0.23	7.02
W858	PL8*125	S355-JR	2	132	0.03	0.75
				Total	4.63	163.51

BOLT LIST:-

BOLT \ STUD	BOLT DESCRIPTION	QTY	FINISH

1 *REQUIRED AS DRAWN MARKED* **Z8-FR057**

6 October Monorail
Engineering Unit
Valid For Construction

GENERAL NOTES:

1. THE DIMENSIONS SHOWN ARE NOMINAL (IN MILLIMETERS), U.N.O.
2. WELD SIZESHALL BE AISC MINIMUM OF 6 mm UNLESS NOTED OTHERWISE.
3. ALL FIELD WELDS SHALL BE INSPECTED PER QUALITY ASSURANCE AND SPECIAL INSPECTIONS.

REFERENCE DRAWINGS

1	93M-BOA-NAT-LOT-04833
2	93M-BOA-NAT-LOT-09170
3	93M-BOA-NAT-LOT-01976
4	93M-BOA-NAT-LOT-20021
5	
6	
7	
8	
9	

6TH OF OCTOBER CITY RAIL TRANSIT MONORAIL

The Authority | Hill International Consultant | Main Contractor | Structural Designer

KEY PLAN:

SCALE	SHOPDRAWING	DATE
AS SHOWN		

REV	DATE	DSG.	CHK.	APP.	AMENDMENTS	STATUS

DRAWING TITLE
6TH OF OCTOBER MONORAIL
SERVICE WALKWAYS
ZONE
Z8-FR057

Project Code	Rubric	Initiator	Lot	Ref	Number	Revision
93M	0476	ACC	60DEP	DWG	08235	B

Tekla structures

Same comments as
93M-0476-ACC-60DEP-DWG-08180-B.

REVIEWED WITH COMMENT MONORAILS PROJECT

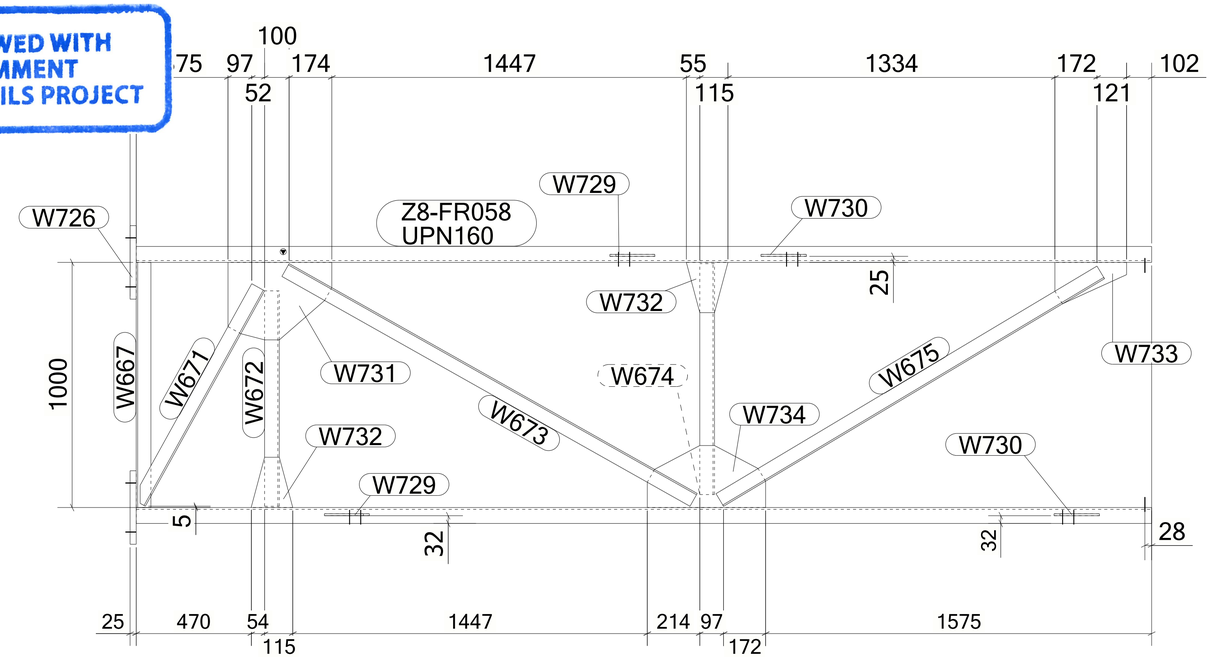

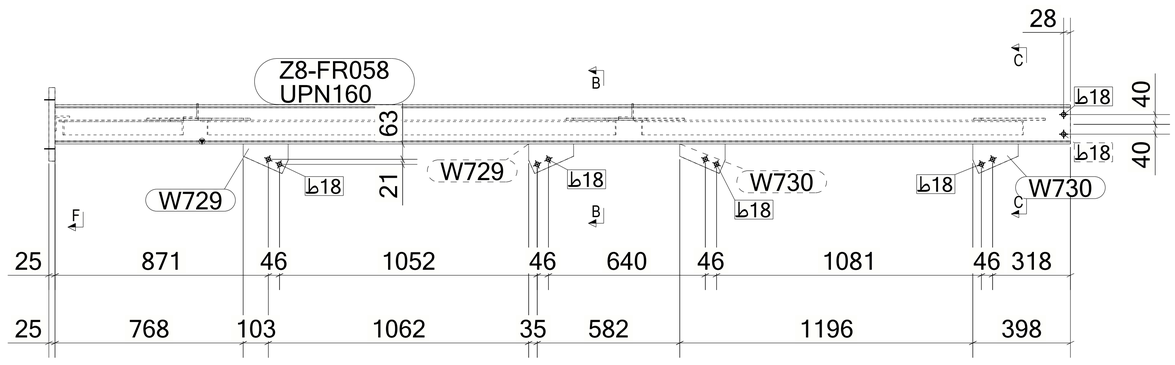

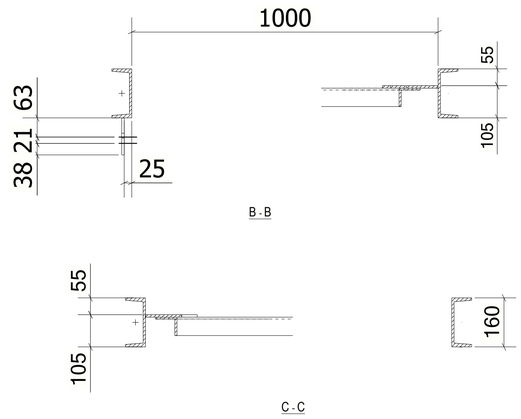

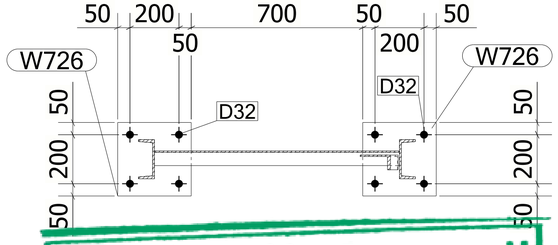

MATERIAL LIST FOR ASSEMBLY MK'D **Z8-FR058**

Mark	Profile	GRADE	No.	Length	Area	Weight
Z8-FR058	UPN160	S235JR	1	4144	2.28	78.07
W625	UPN160	S235JR	1	4144	2.28	78.07
W667	L60*6	S235JR	1	1000	0.24	5.37
W671	L60*6	S235JR	1	1004	0.24	5.34
W672	L60*6	S235JR	1	879	0.21	4.72
W673	L60*6	S235JR	1	1911	0.46	10.26
W674	L60*6	S235JR	1	942	0.23	5.06
W675	L60*6	S235JR	1	1811	0.44	9.72
W726	PL25*300	S355JR	2	300	0.21	17.66
W729	PL8*120.8	S355JR	2	183	0.04	1.00
W730	PL8*120.2	S355JR	2	185	0.04	1.00
W731	PL8*316.1	S355-JR	1	424	0.23	6.93
W732	PL8*164.1	S355JR	2	228	0.05	1.48
W733	PL8*169.1	S355JR	1	293	0.07	2.08
W734	PL8*252.9	S355JR	1	483	0.21	6.12
				Total	7.55	254.02

BOLT LIST:-

BOLT \ STUD	BOLT DESCRIPTION	QTY	FINISH

1 *REQUIRED AS DRAWN MARKED* **Z8-FR058**

6 October Monorail
Engineering Unit
Valid For Construction

GENERAL NOTES:

1. THE DIMENSIONS SHOWN ARE NOMINAL (IN MILLIMETERS), U.N.O.
2. WELD SIZESHALL BE AISC MINIMUM OF 6 mm UNLESS NOTED OTHERWISE.
3. ALL FIELD WELDS SHALL BE INSPECTED PER QUALITY ASSURANCE AND SPECIAL INSPECTIONS.

REFERENCE DRAWINGS

1	93M-BOA-NAT-LOT-04833
2	93M-BOA-NAT-LOT-09170
3	93M-BOA-NAT-LOT-01976
4	93M-BOA-NAT-LOT-20021
5	
6	
7	
8	
9	

6TH OF OCTOBER CITY RAIL TRANSIT MONORAIL

The Authority — Hill International Consultant — ORASCOM BOMBARDIER Main Contractor — INNOVA Structural Designer

KEY PLAN:

SCALE	SHOPDRAWING	DATE
AS SHOWN		12/05/2023

REV	DATE	DSG.	CHK.	APP.	AMENDMENTS	STATUS
B	12/05/2023	M.KH	M.KH	DR.M.M	ISSUED FOR INFORMATION	IFI
A	11/20/2022	M.KH	M.KH	DR.M.M	ISSUED FOR INFORMATION	IFI

DRAWING TITLE
6TH OF OCTOBER MONORAIL
SERVICE WALKWAYS
ZONE (1008)
Z8-FR058

Project Code	Rubric	Initiator	Lot	Ref	Number	Revision
93M	0476	ACC	60DEP	DWG	08236	B

Tekla structures

Same comments as
93M-0476-ACC-60DEP-DWG-08180-B.

REVIEWED WITH COMMENT
MONORAILS PROJECT

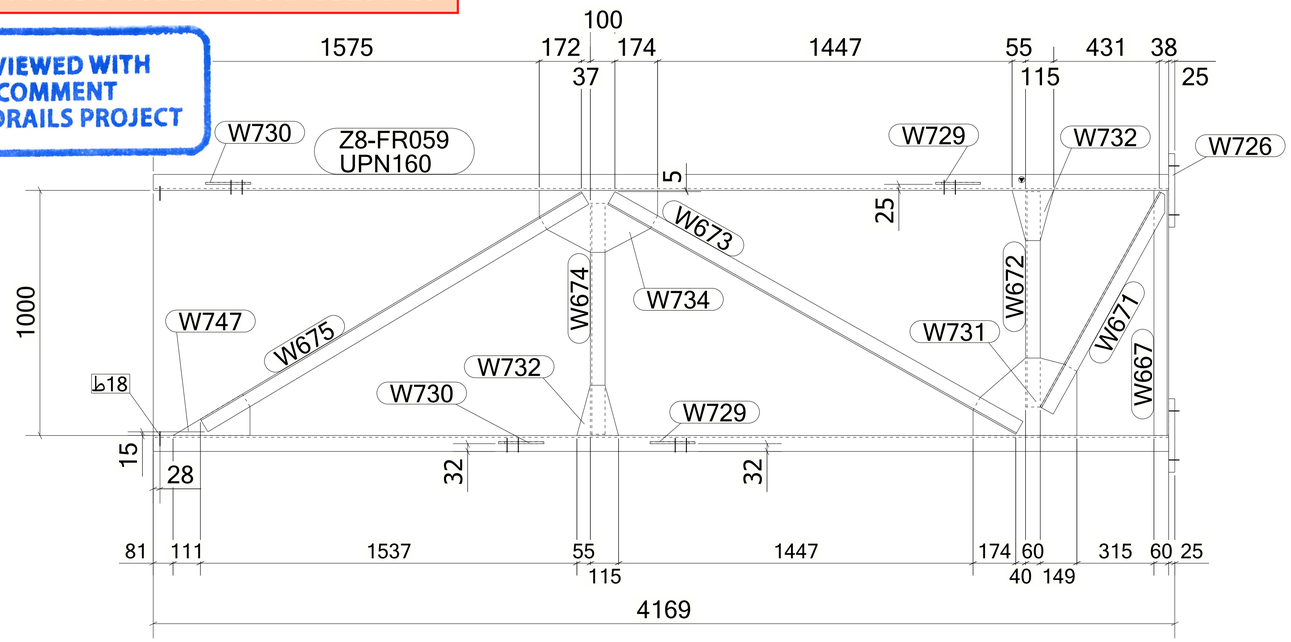

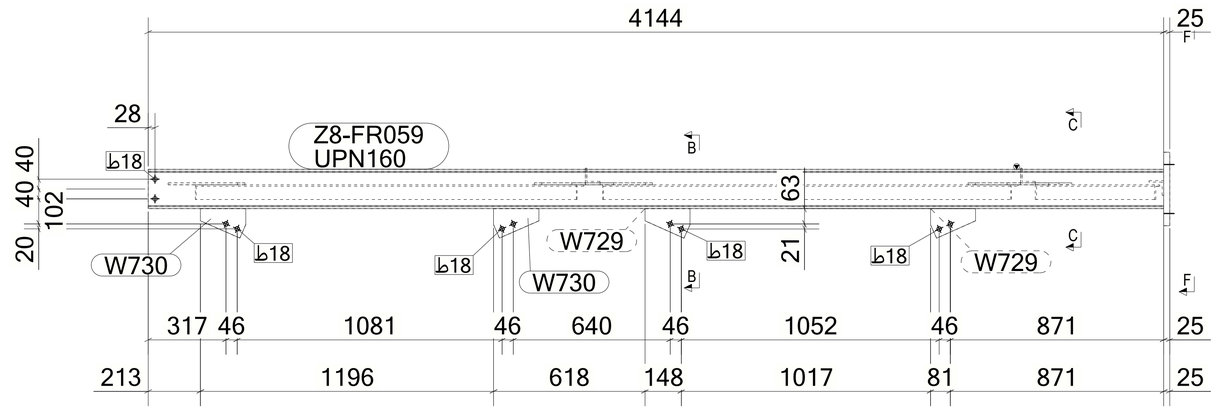

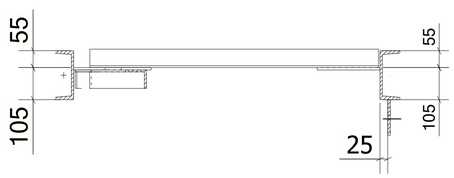

B - B

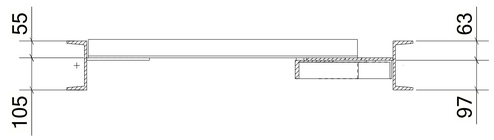

C - C

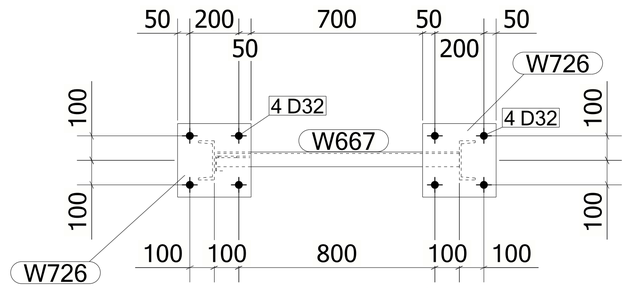

MATERIAL LIST FOR ASSEMBLY MK'D **Z8-FR059**						
Mark	Profile	GRADE	No.	Length	Area	Weight
Z8-FR059	UPN160	S235JR	1	4144	2.28	78.07
W625	UPN160	S235JR	1	4144	2.28	78.07
W667	L60*6	S235JR	1	1000	0.24	5.37
W671	L60*6	S235JR	1	1004	0.24	5.34
W672	L60*6	S235JR	1	879	0.21	4.72
W673	L60*6	S235JR	1	1911	0.46	10.26
W674	L60*6	S235JR	1	942	0.23	5.06
W675	L60*6	S235JR	1	1811	0.44	9.72
W726	PL25*300	S355JR	2	300	0.21	17.66
W729	PL8*120.8	S355JR	2	183	0.04	1.00
W730	PL8*120.2	S355JR	2	185	0.04	1.00
W731	PL8*316.1	S355-JR	1	424	0.23	6.93
W732	PL8*164.1	S355JR	2	228	0.05	1.48
W734	PL8*252.9	S355JR	1	483	0.21	6.12
W747	PL8*160.9	S355JR	1	330	0.06	1.78
				Total	7.54	253.72

BOLT LIST:-

BOLT \ STUD	BOLT DESCRIPTION	QTY	FINISH

1 *REQUIRED AS DRAWN MARKED* **Z8-FR059**

GENERAL NOTES:

1. THE DIMENSIONS SHOWN ARE NOMINAL (IN MILLIMETERS), U.N.O.
2. WELD SIZESHALL BE AISC MINIMUM OF 6 mm UNLESS NOTED OTHERWISE.
3. ALL FIELD WELDS SHALL BE INSPECTED PER QUALITY ASSURANCE AND SPECIAL INSPECTIONS.

REFERENCE DRAWINGS

1	93M-BOA-NAT-LOT-04833
2	93M-BOA-NAT-LOT-09170
3	93M-BOA-NAT-LOT-01976
4	93M-BOA-NAT-LOT-20021
5	
6	
7	
8	
9	

6TH OF OCTOBER CITY RAIL TRANSIT MONORAIL

The Authority — Hill International Consultant — Main Contractor — Structural Designer

KEY PLAN:

6 October Monorail
Engineering Unit
Valid For Construction

SCALE	SHOPDRAWING	DATE
AS SHOWN		12/05/2023

REV	DATE	DSG.	CHK.	APP.	AMENDMENTS	STATUS
B	12/05/2023	M.KH	M.KH	DR.M.M	ISSUED FOR INFORMATION	IFI
A	11/20/2022	M.KH	M.KH	DR.M.M	ISSUED FOR INFORMATION	IFI

DRAWING TITLE
6TH OF OCTOBER MONORAIL
SERVICE WALKWAYS
ZONE (1008)
Z8-FR059

Project Code	Rubric	Initiator	Lot	Ref	Number	Revision
93M	047	6ACC	60DE	PDWG	08237	B

Tekla structures

Same comments as
93M-0476-ACC-60DEP-DWG-08180-B.

REVIEWED WITH COMMENT
MONORAILS PROJECT

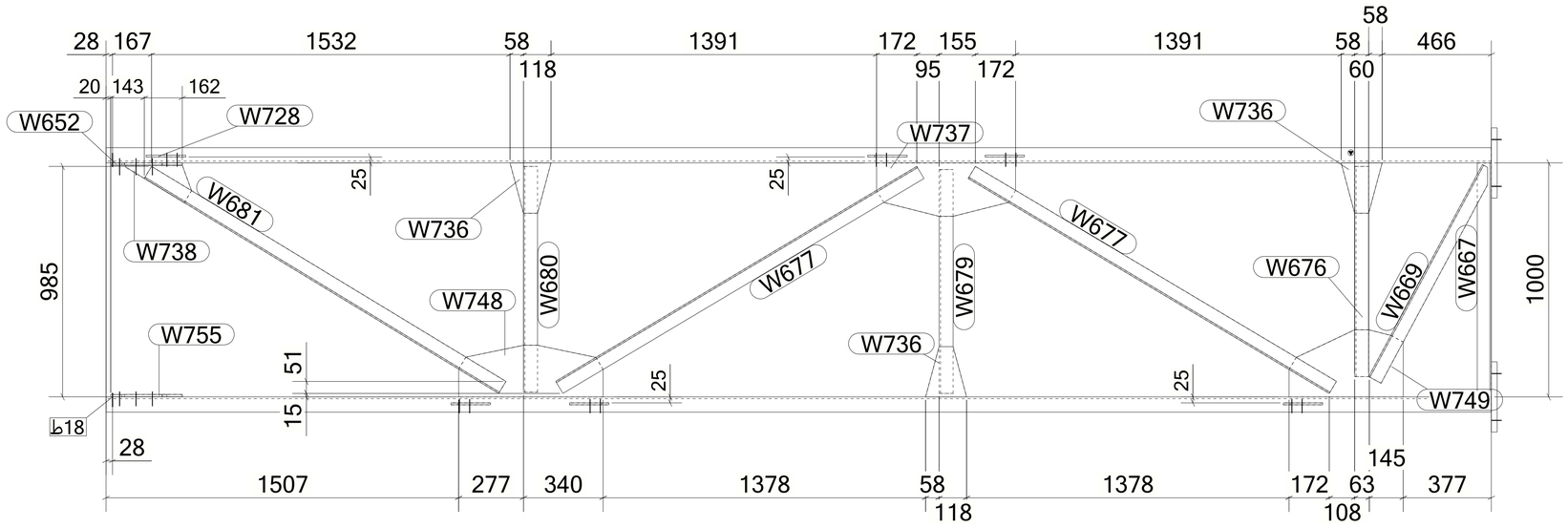

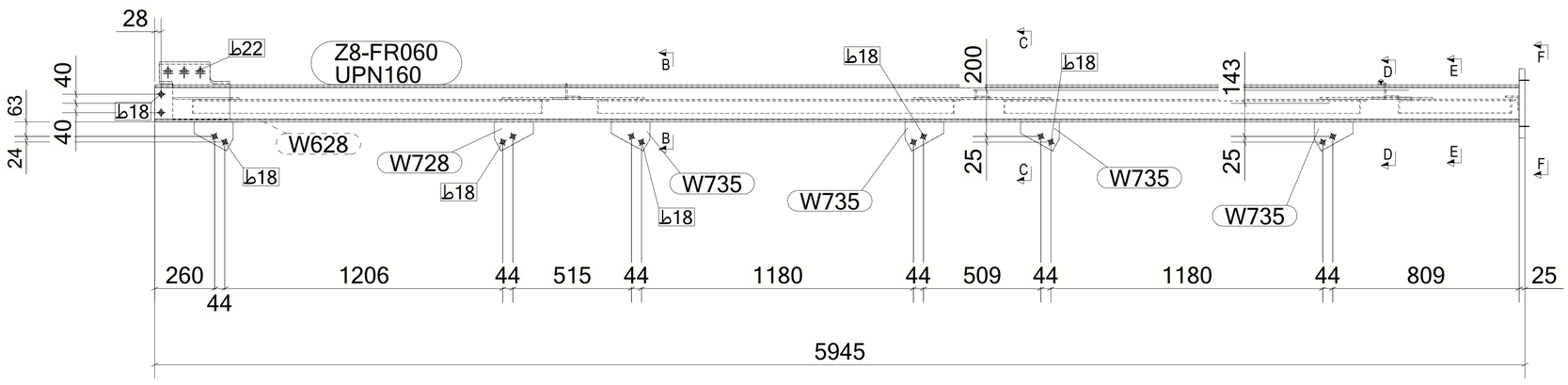

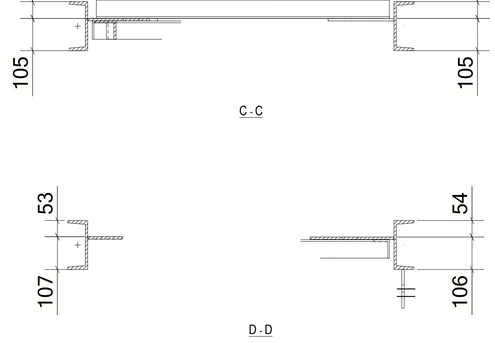

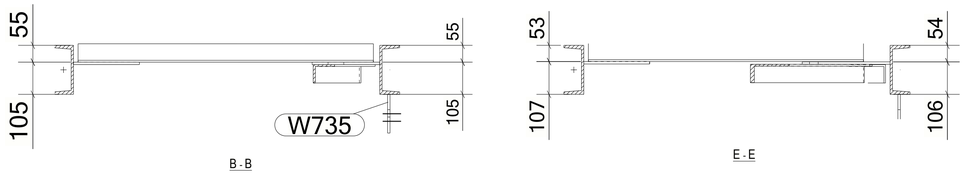

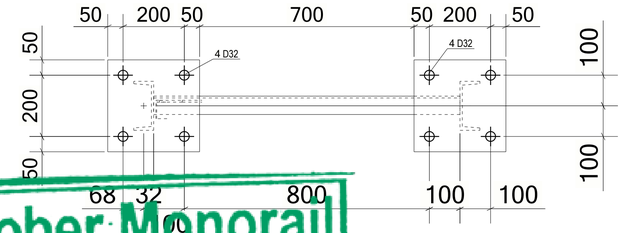

MATERIAL LIST FOR ASSEMBLY MK'D **Z8-FR060**

Mark	Profile	GRADE	No.	Length	Area	Weight
Z8-FR060	UPN160	S235JR	1	5920	3.26	111.53
W628	UPN160	S235JR	1	5920	3.26	111.53
W652	PL10*250	S355JR	1	306	0.13	4.68
W667	L60*6	S235JR	1	1000	0.24	5.37
W669	L60*6	S235JR	1	1028	0.25	5.47
W676	L60*6	S235JR	1	898	0.22	4.82
W677	L60*6	S235JR	2	1796	0.43	9.64
W679	L60*6	S235JR	1	957	0.23	5.14
W680	L60*6	S235JR	1	964	0.23	5.18
W681	L60*6	S235JR	1	1771	0.43	9.51
W726	PL25*300	S355JR	2	300	0.21	17.66
W728	PL8*125.8	S355JR	2	169	0.03	0.96
W735	PL8*126.3	S355JR	4	168	0.03	0.95
W736	PL8*169.2	S355JR	3	238	0.06	1.59
W737	PL8*228.2	S355JR	1	594	0.24	7.30
W738	PL8*132.4	S355JR	1	298	0.05	1.45
W748	PL8*220.8	S355JR	1	617	0.25	7.46
W749	PL8*286.9	S355-JR	1	488	0.25	7.39
W755	PL10*239.9	S355JR	1	306	0.13	4.49
				Total	10.81	356.42

BOLT LIST:-

BOLT \ STUD	BOLT DESCRIPTION	QTY	FINISH

1 *REQUIRED AS DRAWN MARKED* **Z8-FR060**

GENERAL NOTES:

1. THE DIMENSIONS SHOWN ARE NOMINAL (IN MILLIMETERS), U.N.O.
2. WELD SIZESHALL BE AISC MINIMUM OF 6 mm UNLESS NOTED OTHERWISE.
3. ALL FIELD WELDS SHALL BE INSPECTED PER QUALITY ASSURANCE AND SPECIAL INSPECTIONS.

REFERENCE DRAWINGS

1	93M-BOA-NAT-LOT-04833
2	93M-BOA-NAT-LOT-09170
3	93M-BOA-NAT-LOT-01976
4	93M-BOA-NAT-LOT-20021
5	
6	
7	
8	
9	

6TH OF OCTOBER CITY RAIL TRANSIT MONORAIL

The Authority — Hill International (Consultant) — Main Contractor — Structural Designer

KEY PLAN:

6 October Monorail
Engineering Unit
Valid For Construction

SCALE	SHOPDRAWING	DATE
AS SHOWN		12/05/2023

REV	DATE	DSG.	CHK.	APP.	AMENDMENTS	STATUS
B	12/05/2023	M.KH	M.KH	DR.M.M	ISSUED FOR INFORMATION	IFI
A	11/20/2022	M.KH	M.KH	DR.M.M	ISSUED FOR INFORMATION	IFI

DRAWING TITLE
6TH OF OCTOBER MONORAIL
SERVICE WALKWAYS
ZONE (1008)
Z8-FR060

Project Code	Rubric	Initiator	Lot	Ref	Number	Revision
93M	0476	ACC	60	DEP	DWG-08238	B

Tekla structures

Same comments as 93M-0476-ACC-60DEP-DWG-08180-B.

REVIEWED WITH COMMENT MONORAILS PROJECT

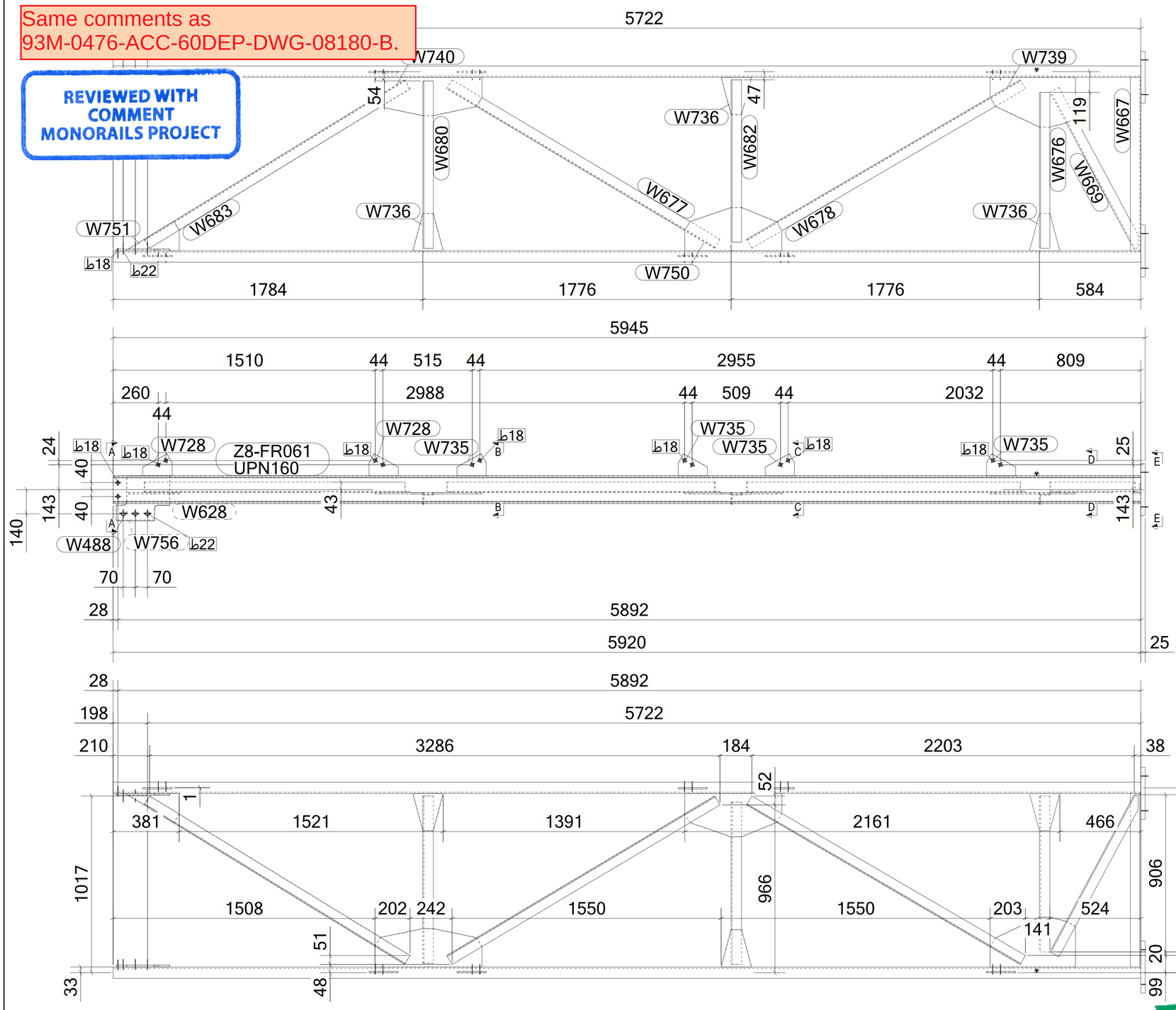

1 *REQUIRED AS DRAWN MARKED* **Z8-FR061**

MATERIAL LIST FOR ASSEMBLY MK'D **Z8-FR061**

Mark	Profile	GRADE	No.	Length	Area	Weight
Z8-FR061	UPN160	S235JR	1	5920	3.26	111.53
W488	PL10*260	S355JR	1	308	0.14	4.87
W628	UPN160	S235JR	1	5920	3.26	111.53
W667	L60*6	S235JR	1	1000	0.24	5.37
W669	L60*6	S235JR	1	1028	0.25	5.47
W676	L60*6	S235JR	1	898	0.22	4.82
W677	L60*6	S235JR	1	1796	0.43	9.64
W678	L60*6	S235JR	1	1824	0.44	9.79
W680	L60*6	S235JR	1	964	0.23	5.18
W682	L60*6	S235JR	1	935	0.23	5.02
W683	L60*6	S235JR	1	1759	0.42	9.45
W726	PL25*300	S355JR	2	300	0.21	17.66
W728	PL8*125.8	S355JR	2	169	0.03	0.96
W735	PL8*126.3	S355JR	4	168	0.03	0.95
W736	PL8*169.2	S355JR	3	238	0.06	1.59
W739	PL8*286.9	S355-JR	1	491	0.25	7.43
W740	PL8*221.1	S355JR	1	616	0.25	7.45
W750	PL8*250	S355JR	1	559	0.24	7.24
W751	PL8*161.9	S355JR	1	308	0.06	1.62
W756	PL10*255	S355JR	1	308	0.13	4.79
				Total	10.83	357.01

BOLT LIST:-

BOLT \ STUD	BOLT DESCRIPTION	QTY	FINISH

6 October Monorail
Engineering Unit
Valid For Construction

GENERAL NOTES:

1. THE DIMENSIONS SHOWN ARE NOMINAL (IN MILLIMETERS), U.N.O.
2. WELD SIZESHALL BE AISC MINIMUM OF 6 mm UNLESS NOTED OTHERWISE.
3. ALL FIELD WELDS SHALL BE INSPECTED PER QUALITY ASSURANCE AND SPECIAL INSPECTIONS.

REFERENCE DRAWINGS

1	93M-BOA-NAT-LOT-04833
2	93M-BOA-NAT-LOT-09170
3	93M-BOA-NAT-LOT-01976
4	93M-BOA-NAT-LOT-20021
5	
6	
7	
8	
9	

6TH OF OCTOBER CITY RAIL TRANSIT MONORAIL

The Authority — Hill International Consultant — Main Contractor — Structural Designer

KEY PLAN:

SCALE	SHOPDRAWING	DATE
AS SHOWN		

REV	DATE	DSG.	CHK.	APP.	AMENDMENTS	STATUS

DRAWING TITLE
6TH OF OCTOBER MONORAIL
SERVICE WALKWAYS
ZONE
Z8-FR061

Project Code	Rubric	Initiator	Lot	Ref	Number	Revision
93M	047	6ACC	60DEP	DWG	08239	B

Tekla structures

Same comments as
93M-0476-ACC-60DEP-DWG-08180-B.

REVIEWED WITH COMMENT
MONORAILS PROJECT

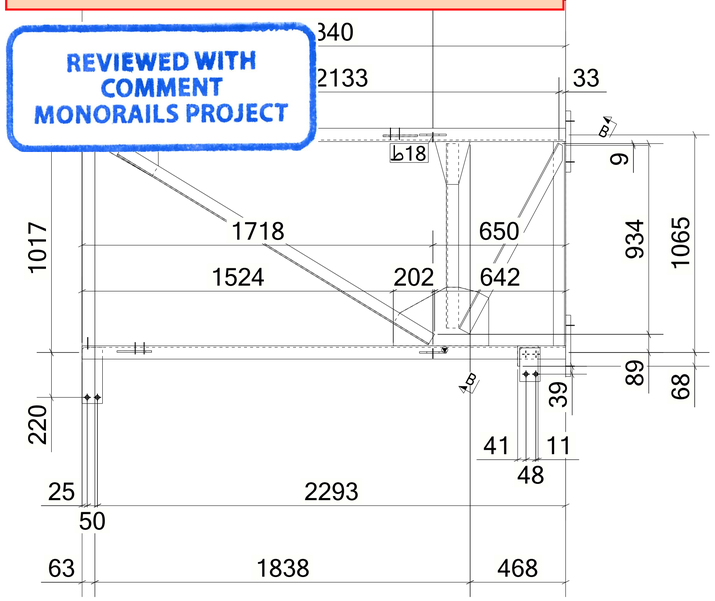

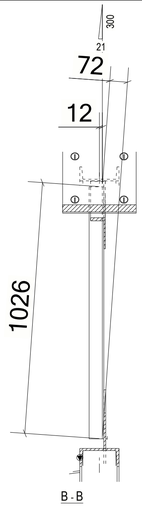

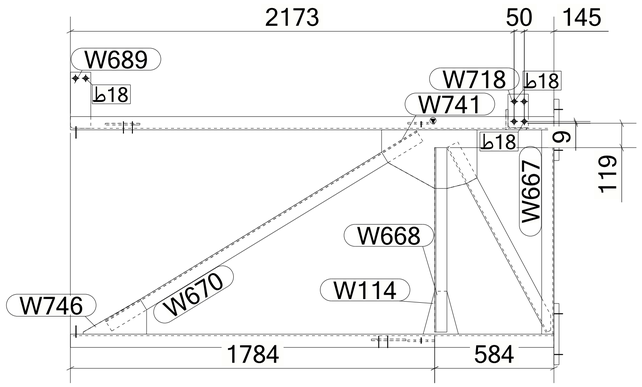

MATERIAL LIST FOR ASSEMBLY MK'D **Z8-FR062**

Mark	Profile	GRADE	No.	Length	Area	Weight
Z8-FR062	UPN160	S235JR	1	2368	1.30	44.61
W114	PL8*166.7	S355JR	1	233	0.05	1.53
W624	UPN160	S235JR	1	2368	1.30	44.61
W667	L60*6	S235JR	1	1000	0.24	5.37
W668	L60*6	S235JR	1	903	0.22	4.85
W669	L60*6	S235JR	1	1028	0.25	5.47
W670	L60*6	S235JR	1	1784	0.43	9.58
W689	PL10*100	S355JR	1	275	0.06	2.15
W717	L100*10	S235JR	1	840	0.34	12.53
W718	PL8*100	S355JR	1	165	0.04	1.03
W726	PL25*300	S355JR	2	300	0.21	17.66
W728	PL8*125.8	S355JR	2	169	0.03	0.96
W741	PL8*286.9	S355-JR	1	467	0.23	7.02
W746	PL8*170.3	S355JR	1	311	0.07	1.87
W858	PL8*125	S355-JR	2	132	0.03	0.75
				Total	5.08	179.37

BOLT LIST:-

BOLT \ STUD	BOLT DESCRIPTION		QTY	FINISH
BOLT	B1N2W16 X 50	A325M	4	

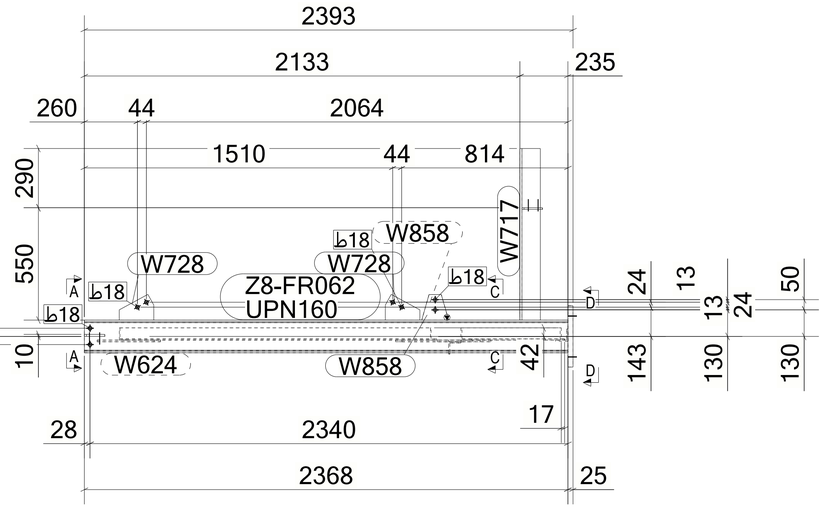

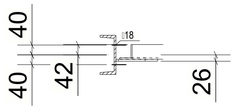

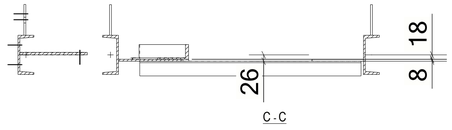

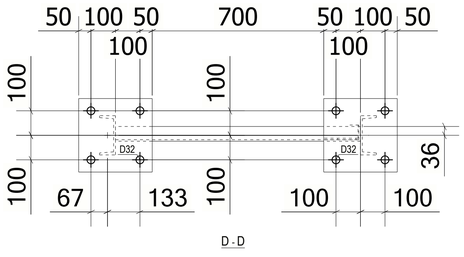

1 *REQUIRED AS DRAWN MARKED* **Z8-FR062**

6 October Monorail
Engineering Unit
Valid For Construction

GENERAL NOTES:

1. THE DIMENSIONS SHOWN ARE NOMINAL (IN MILLIMETERS), U.N.O.
2. WELD SIZESHALL BE AISC MINIMUM OF 6 mm UNLESS NOTED OTHERWISE.
3. ALL FIELD WELDS SHALL BE INSPECTED PER QUALITY ASSURANCE AND SPECIAL INSPECTIONS.

REFERENCE DRAWINGS

1	93M-BOA-NAT-LOT-04833
2	93M-BOA-NAT-LOT-09170
3	93M-BOA-NAT-LOT-01976
4	93M-BOA-NAT-LOT-20021
5	
6	
7	
8	
9	

6TH OF OCTOBER CITY RAIL TRANSIT MONORAIL

The Authority | Consultant: Hill International | Main Contractor: ORASCOM / BOMBARDIER | Structural Designer: INNOVA

KEY PLAN:

SCALE	SHOPDRAWING	DATE
AS SHOWN		

REV	DATE	DSG.	CHK.	APP.	AMENDMENTS	STATUS

DRAWING TITLE
6TH OF OCTOBER MONORAIL
SERVICE WALKWAYS
ZONE
Z8-FR062

Project Code	Rubric	Initiator	Lot	Ref	Number	Revision
93M	047	6ACC	60	DEP	DWG0824	B

Tekla structures

Approval is subject to approval of coordination package between multi-discipline.

REVIEWED WITH COMMENT
MONORAILS PROJECT

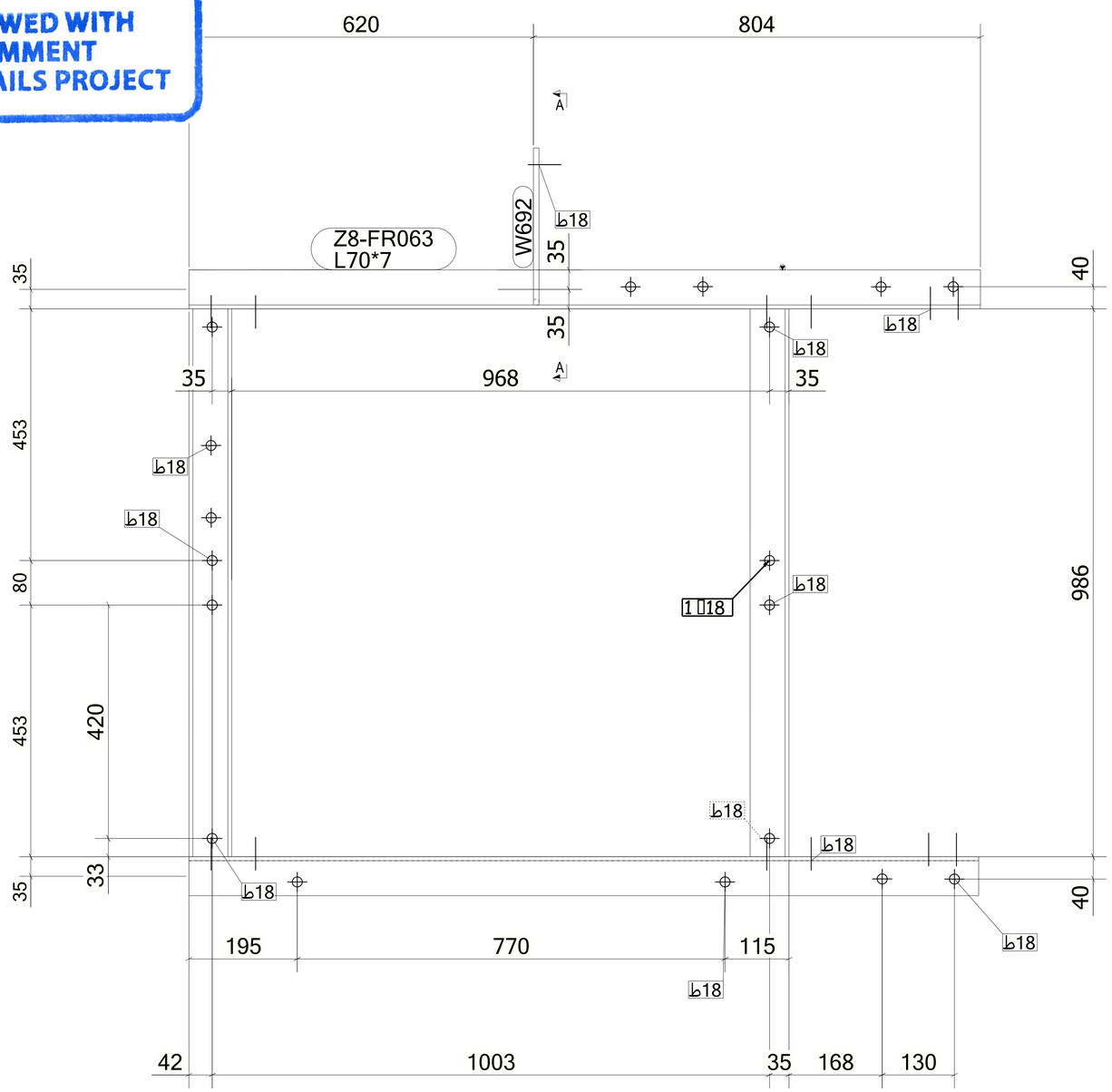

MATERIAL LIST FOR ASSEMBLY MK'D **Z8-FR063**

Mark	Profile	GRADE	No.	Length	Area	Weight
Z8-FR063	L70*7	S235JR	1	1424	0.40	10.41
W643	L70*7	S235JR	1	986	0.28	7.21
W648	L70*7	S235JR	1	986	0.28	7.21
W664	L70*7	S235JR	1	1421	0.40	10.39
W692	PL10*100	S355JR	1	283	0.06	2.21
				Total	1.42	37.42

BOLT LIST:-

BOLT \ STUD	BOLT DESCRIPTION	QTY	FINISH
BOLT	B1N2W16 X 50 A325M	15	

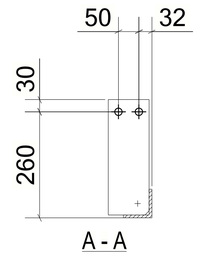

1 *REQUIRED AS DRAWN MARKED* **Z8-FR063**

GENERAL NOTES:

1. THE DIMENSIONS SHOWN ARE NOMINAL (IN MILLIMETERS), U.N.O.
2. WELD SIZESHALL BE AISC MINIMUM OF 6 mm UNLESS NOTED OTHERWISE.
3. ALL FIELD WELDS SHALL BE INSPECTED PER QUALITY ASSURANCE AND SPECIAL INSPECTIONS.

REFERENCE DRAWINGS

1	93M-BOA-NAT-LOT-04833
2	93M-BOA-NAT-LOT-09170
3	93M-BOA-NAT-LOT-01976
4	93M-BOA-NAT-LOT-20021
5	
6	
7	
8	
9	

6TH OF OCTOBER CITY RAIL TRANSIT MONORAIL

The Authority | Consultant: Hill International | Main Contractor: ORASCOM CONSTRUCTION, BOMBARDIER | Structural Designer: INNOVA TRANSPORTATION

KEY PLAN:

6 October Monorail
Engineering Unit
Valid For Construction

SCALE	SHOPDRAWING	DATE
AS SHOWN		12/05/2023

REV	DATE	DSG.	CHK.	APP.	AMENDMENTS	STATUS
B	12/05/2023	M.KH	M.KH	DR.M.M	ISSUED FOR INFORMATION	IFI
A	11/20/2022	M.KH	M.KH	DR.M.M	ISSUED FOR INFORMATION	IFI

DRAWING TITLE
6TH OF OCTOBER MONORAIL
SERVICE WALKWAYS
ZONE (1008)
Z8-FR063

Project Code	Rubric	Initiator	Lot	Ref	Number	Revision
93M0476	ACC60	DEP	DWG	0824	1	B

Tekla structures

Approval is subject to approval of coordination package between multi-discipline.

REVIEWED WITH COMMENT
MONORAILS PROJECT

MATERIAL LIST FOR ASSEMBLY MK'D **Z8-HR001**

Mark	Profile	GRADE	No.	Length	Area	Weight
Z8-HR001	CHS48.3*4.0	S235JR	1	2829	0.42	12.37
W159	ROD32	S235JR	1	100	0.01	0.60
				Total	0.44	12.97

BOLT LIST:-

BOLT \ STUD	BOLT DESCRIPTION	QTY	FINISH

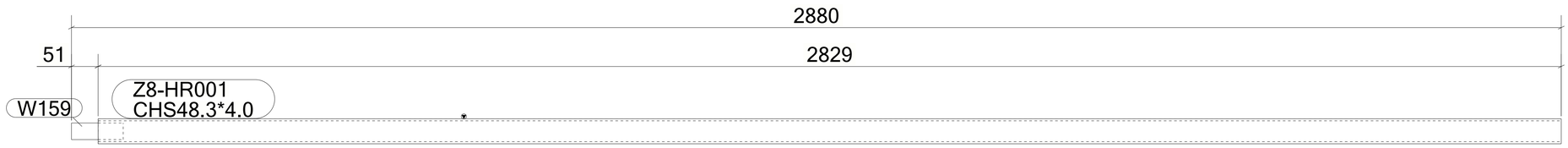

2 *REQUIRED AS DRAWN MARKED* **Z8-HR001**

6 October Monorail
Engineering Unit
Valid For Construction

GENERAL NOTES:

1. THE DIMENSIONS SHOWN ARE NOMINAL (IN MILLIMETERS), U.N.O.
2. WELD SIZESHALL BE AISC MINIMUM OF 6 mm UNLESS NOTED OTHERWISE.
3. ALL FIELD WELDS SHALL BE INSPECTED PER QUALITY ASSURANCE AND SPECIAL INSPECTIONS.

REFERENCE DRAWINGS

1	93M-BOA-NAT-LOT-04833
2	93M-BOA-NAT-LOT-09170
3	93M-BOA-NAT-LOT-01976
4	93M-BOA-NAT-LOT-20021
5	
6	
7	
8	
9	

6TH OF OCTOBER CITY RAIL TRANSIT MONORAIL

The Authority | Consultant: Hill International | Main Contractor: ORASCOM CONSTRUCTION, BOMBARDIER | Structural Designer: INNOVA TRANSPORTATION

KEY PLAN:

SCALE	SHOPDRAWING	DATE
AS SHOWN		12/05/2023

REV	DATE	DSG.	CHK.	APP.	AMENDMENTS	STATUS
B	12/05/2023	M.KH	M.KH	DR.M.M	ISSUED FOR INFORMATION	IFI
A	11/20/2022	M.KH	M.KH	DR.M.M	ISSUED FOR INFORMATION	IFI

DRAWING TITLE
6TH OF OCTOBER MONORAIL
SERVICE WALKWAYS
ZONE (1008)
Z8-HR001

Project Code	Rubric	Initiator	Lot	Ref	Number	Revision
93M	047	6ACC	60DE	PDWG	0824	B

Tekla structures

approval is subject to approval of coordination package between multi-discipline

REVIEWED WITH COMMENT
MONORAILS PROJECT

MATERIAL LIST FOR ASSEMBLY MK'D **Z8-HR002**

Mark	Profile	GRADE	No.	Length	Area	Weight
Z8-HR002	CHS48.3*4.0	S235JR	1	2974	0.45	13.00
W159	ROD32	S235JR	1	100	0.01	0.60
				Total	0.46	13.61

BOLT LIST:-

BOLT \ STUD	BOLT DESCRIPTION	QTY	FINISH

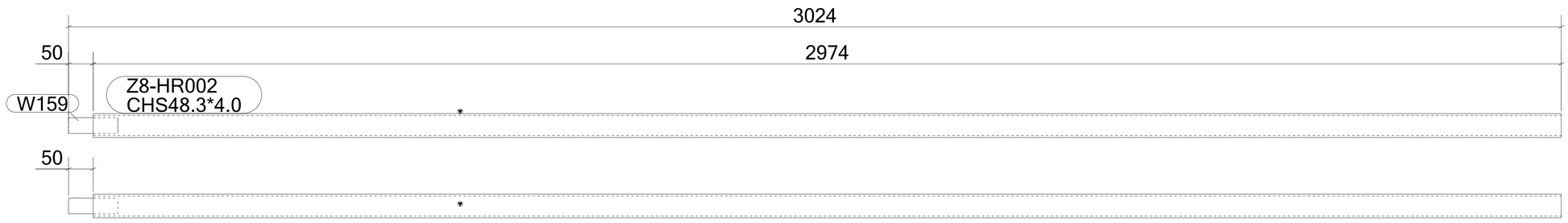

5 *REQUIRED AS DRAWN MARKED* **Z8-HR002**

6 October Monorail
Engineering Unit
Valid For Construction

GENERAL NOTES:

1. THE DIMENSIONS SHOWN ARE NOMINAL (IN MILLIMETERS), U.N.O.
2. WELD SIZESHALL BE AISC MINIMUM OF 6 mm UNLESS NOTED OTHERWISE.
3. ALL FIELD WELDS SHALL BE INSPECTED PER QUALITY ASSURANCE AND SPECIAL INSPECTIONS.

REFERENCE DRAWINGS

1	93M-BOA-NAT-LOT-04833
2	93M-BOA-NAT-LOT-09170
3	93M-BOA-NAT-LOT-01976
4	93M-BOA-NAT-LOT-20021
5	
6	
7	
8	
9	

6TH OF OCTOBER CITY RAIL TRANSIT MONORAIL

The Authority — Consultant — Main Contractor — Structural Designer

KEY PLAN:

REV	DATE	DSG.	CHK.	APP.	AMENDMENTS	STATUS
B	12/05/2023	M.KH	M.KH	DR.M.M	ISSUED FOR INFORMATION	IFI
A	11/20/2022	M.KH	M.KH	DR.M.M	ISSUED FOR INFORMATION	IFI

SCALE: AS SHOWN | SHOPDRAWING | DATE: 12/05/2023

DRAWING TITLE
6TH OF OCTOBER MONORAIL SERVICE WALKWAYS ZONE (1008)
Z8-HR002

Project Code	Rubric	Initiator	Lot	Ref	Number	Revision
93	M047	6ACC	60DE	PDWG	0824	3 B

Tekla structures

approval is subject to approval of coordination package between multi-discipline

REVIEWED WITH COMMENT
MONORAILS PROJECT

MATERIAL LIST FOR ASSEMBLY MK'D **Z8-HR003**

Mark	Profile	GRADE	No.	Length	Area	Weight
Z8-HR003	CHS48.3*4.0	S235JR	1	2112	0.32	9.24
W159	ROD32	S235JR	1	100	0.01	0.60
				Total	0.33	9.84

BOLT LIST:-

BOLT \ STUD	BOLT DESCRIPTION	QTY	FINISH

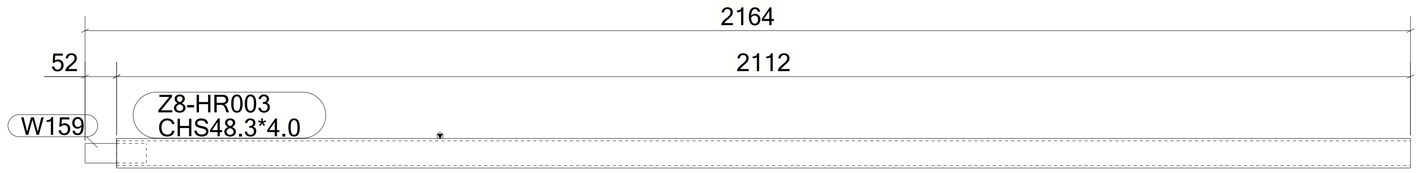

1 *REQUIRED AS DRAWN MARKED* **Z8-HR003**

6 October Monorail
Engineering Unit
Valid For Construction

GENERAL NOTES:

1. THE DIMENSIONS SHOWN ARE NOMINAL (IN MILLIMETERS), U.N.O.
2. WELD SIZESHALL BE AISC MINIMUM OF 6 mm UNLESS NOTED OTHERWISE.
3. ALL FIELD WELDS SHALL BE INSPECTED PER QUALITY ASSURANCE AND SPECIAL INSPECTIONS.

REFERENCE DRAWINGS

1	93M-BOA-NAT-LOT-04833
2	93M-BOA-NAT-LOT-09170
3	93M-BOA-NAT-LOT-01976
4	93M-BOA-NAT-LOT-20021
5	
6	
7	
8	
9	

6TH OF OCTOBER CITY RAIL TRANSIT MONORAIL

The Authority | Consultant: Hill International | Main Contractor: ORASCOM CONSTRUCTION, BOMBARDIER | Structural Designer: INNOVA TRANSPORTATION

KEY PLAN:

SCALE	SHOPDRAWING	DATE
AS SHOWN		12/05/2023

REV	DATE	DSG.	CHK.	APP.	AMENDMENTS	STATUS
B	12/05/2023	M.KH	M.KH	DR.M.M	ISSUED FOR INFORMATION	IFI
A	11/20/2022	M.KH	M.KH	DR.M.M	ISSUED FOR INFORMATION	IFI

DRAWING TITLE
6TH OF OCTOBER MONORAIL
SERVICE WALKWAYS
ZONE (1008)
Z8-HR003

Project Code	Rubric	Initiator	Lot	Ref	Number	Revision
93M0476	ACC60	DEP	DWG	0824	4	B

Tekla structures

approval is subject to approval of coordination package between multi-discipline

REVIEWED WITH COMMENT
MONORAILS PROJECT

MATERIAL LIST FOR ASSEMBLY MK'D **Z8-HR004**

Mark	Profile	GRADE	No.	Length	Area	Weight
Z8-HR004	CHS48.3*4.0	S235JR	1	5998	0.90	26.23
W159	ROD32	S235JR	1	100	0.01	0.60
				Total	0.91	26.83

BOLT LIST:-

BOLT \ STUD	BOLT DESCRIPTION	QTY	FINISH

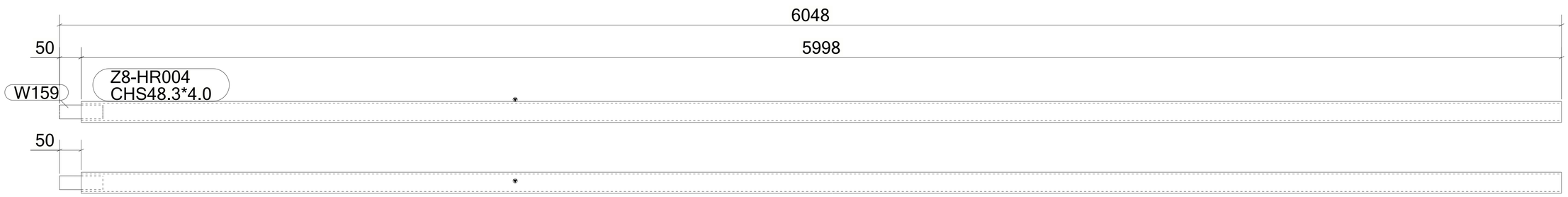

5 *REQUIRED AS DRAWN MARKED* **Z8-HR004**

6 October Monorail
Engineering Unit
Valid For Construction

GENERAL NOTES:

1. THE DIMENSIONS SHOWN ARE NOMINAL (IN MILLIMETERS), U.N.O.
2. WELD SIZESHALL BE AISC MINIMUM OF 6 mm UNLESS NOTED OTHERWISE.
3. ALL FIELD WELDS SHALL BE INSPECTED PER QUALITY ASSURANCE AND SPECIAL INSPECTIONS.

REFERENCE DRAWINGS

1	93M-BOA-NAT-LOT-04833
2	93M-BOA-NAT-LOT-09170
3	93M-BOA-NAT-LOT-01976
4	93M-BOA-NAT-LOT-20021
5	
6	
7	
8	
9	

6TH OF OCTOBER CITY RAIL TRANSIT MONORAIL

The Authority | Consultant: Hill International | Main Contractor: ORASCOM CONSTRUCTION, BOMBARDIER | Structural Designer: INNOVA TRANSPORTATION

KEY PLAN:

SCALE: AS SHOWN | SHOPDRAWING | DATE: 12/05/2023

REV	DATE	DSG.	CHK.	APP.	AMENDMENTS	STATUS
B	12/05/2023	M.KH	M.KH	DR.M.M	ISSUED FOR INFORMATION	IFI
A	11/20/2022	M.KH	M.KH	DR.M.M	ISSUED FOR INFORMATION	IFI

DRAWING TITLE
6TH OF OCTOBER MONORAIL
SERVICE WALKWAYS
ZONE (1008)
Z8-HR004

Project Code	Rubric	Initiator	Lot	Ref	Number	Revision
93	M047	6ACC	60DE	PDWG	08245	B

Tekla structures

approval is subject to approval of coordination package between multi-discipline

REVIEWED WITH COMMENT
MONORAILS PROJECT

MATERIAL LIST FOR ASSEMBLY MK'D **Z8-HR005**

Mark	Profile	GRADE	No.	Length	Area	Weight
Z8-HR005	CHS48.3*4.0	S235JR	1	5997	0.90	26.22
W159	ROD32	S235JR	1	100	0.01	0.60
				Total	0.91	26.82

BOLT LIST:-

BOLT \ STUD	BOLT DESCRIPTION	QTY	FINISH

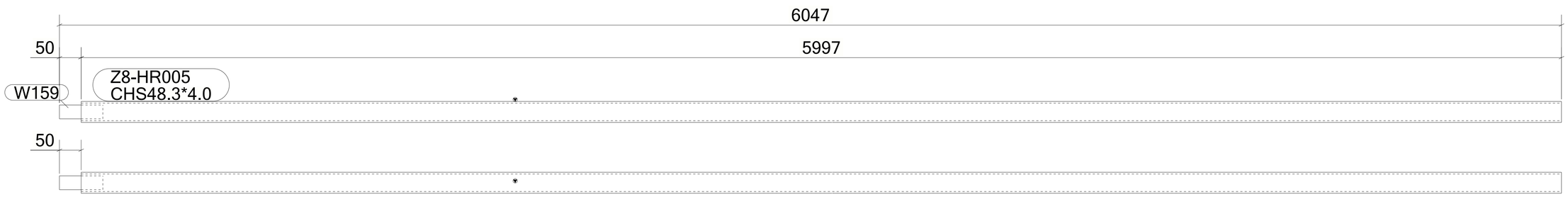

11 *REQUIRED AS DRAWN MARKED* **Z8-HR005**

GENERAL NOTES:

1. THE DIMENSIONS SHOWN ARE NOMINAL (IN MILLIMETERS), U.N.O.
2. WELD SIZESHALL BE AISC MINIMUM OF 6 mm UNLESS NOTED OTHERWISE.
3. ALL FIELD WELDS SHALL BE INSPECTED PER QUALITY ASSURANCE AND SPECIAL INSPECTIONS.

REFERENCE DRAWINGS

1	93M-BOA-NAT-LOT-04833
2	93M-BOA-NAT-LOT-09170
3	93M-BOA-NAT-LOT-01976
4	93M-BOA-NAT-LOT-20021
5	
6	
7	
8	
9	

6TH OF OCTOBER CITY RAIL TRANSIT MONORAIL

The Authority — Hill International Consultant — Main Contractor — Structural Designer

KEY PLAN:

6 October Monorail
Engineering Unit
Valid For Construction

SCALE: AS SHOWN | SHOPDRAWING | DATE: 12/05/2023

REV	DATE	DSG.	CHK.	APP.	AMENDMENTS	STATUS
B	12/05/2023	M.KH	M.KH	DR.M.M	ISSUED FOR INFORMATION	IFI
A	11/20/2022	M.KH	M.KH	DR.M.M	ISSUED FOR INFORMATION	IFI

DRAWING TITLE
6TH OF OCTOBER MONORAIL
SERVICE WALKWAYS
ZONE (1008)
Z8-HR005

Project Code	Rubric	Initiator	Lot	Ref	Number	Revision
9 3 M	0 4 7 6	A C C	6 0 D E P	D W G	0 8 2 4 6	B

Tekla structures

approval is subject to approval of coordination package between multi-discipline

REVIEWED WITH COMMENT
MONORAILS PROJECT

MATERIAL LIST FOR ASSEMBLY MK'D **Z8-HR006**

Mark	Profile	GRADE	No.	Length	Area	Weight
Z8-HR006	CHS48.3*4.0	S235JR	1	2844	0.43	12.44
W159	ROD32	S235JR	1	100	0.01	0.60
				Total	0.44	13.04

BOLT LIST:-

BOLT \ STUD	BOLT DESCRIPTION	QTY	FINISH

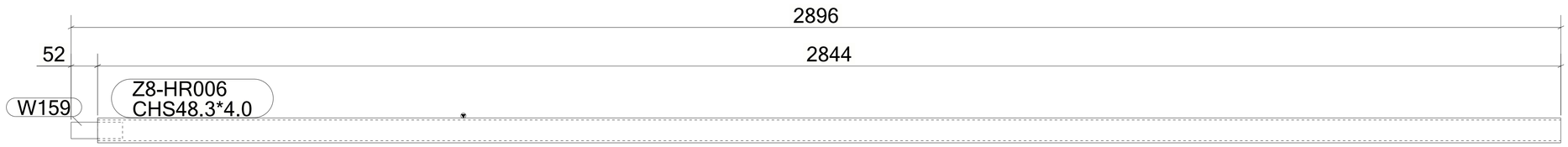

2 *REQUIRED AS DRAWN MARKED* **Z8-HR006**

6 October Monorail
Engineering Unit
Valid For Construction

GENERAL NOTES:

1. THE DIMENSIONS SHOWN ARE NOMINAL (IN MILLIMETERS), U.N.O.
2. WELD SIZESHALL BE AISC MINIMUM OF 6 mm UNLESS NOTED OTHERWISE.
3. ALL FIELD WELDS SHALL BE INSPECTED PER QUALITY ASSURANCE AND SPECIAL INSPECTIONS.

REFERENCE DRAWINGS

1	93M-BOA-NAT-LOT-04833
2	93M-BOA-NAT-LOT-09170
3	93M-BOA-NAT-LOT-01976
4	93M-BOA-NAT-LOT-20021
5	
6	
7	
8	
9	

6TH OF OCTOBER CITY RAIL TRANSIT MONORAIL

The Authority | Hill International Consultant | Main Contractor | Structural Designer

KEY PLAN:

SCALE	SHOPDRAWING	DATE
AS SHOWN		12/05/2023

REV	DATE	DSG.	CHK.	APP.	AMENDMENTS	STATUS
B	12/05/2023	M.KH	M.KH	DR.M.M	ISSUED FOR INFORMATION	IFI
A	11/20/2022	M.KH	M.KH	DR.M.M	ISSUED FOR INFORMATION	IFI

DRAWING TITLE
6TH OF OCTOBER MONORAIL
SERVICE WALKWAYS
ZONE (1008)
Z8-HR006

Project Code	Rubric	Initiator	Lot	Ref	Number	Revision
93M	047	6ACC	60DE	PDWG	08247	B

Tekla structures

approval is subject to approval of coordination package between multi-discipline

REVIEWED WITH COMMENT
MONORAILS PROJECT

MATERIAL LIST FOR ASSEMBLY MK'D **Z8-HR007**

Mark	Profile	GRADE	No.	Length	Area	Weight
Z8-HR007	CHS48.3*4.0	S235JR	1	4501	0.68	19.68
W159	ROD32	S235JR	1	100	0.01	0.60
				Total	0.69	20.29

BOLT LIST:-

BOLT \ STUD	BOLT DESCRIPTION	QTY	FINISH

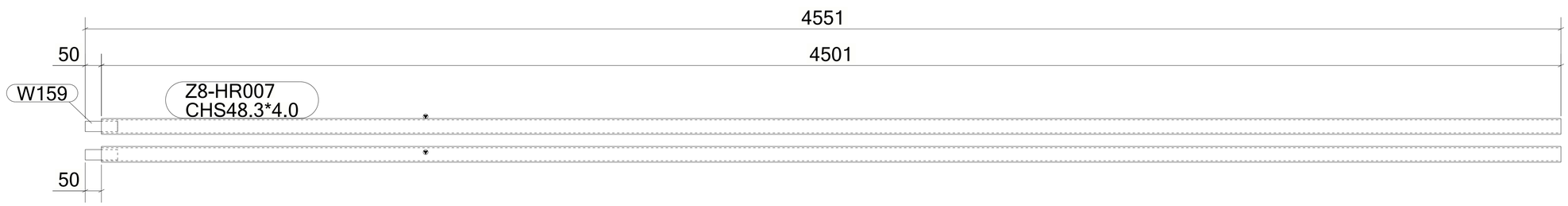

1 *REQUIRED AS DRAWN MARKED* **Z8-HR007**

GENERAL NOTES:

1. THE DIMENSIONS SHOWN ARE NOMINAL (IN MILLIMETERS), U.N.O.
2. WELD SIZESHALL BE AISC MINIMUM OF 6 mm UNLESS NOTED OTHERWISE.
3. ALL FIELD WELDS SHALL BE INSPECTED PER QUALITY ASSURANCE AND SPECIAL INSPECTIONS.

REFERENCE DRAWINGS

1	93M-BOA-NAT-LOT-04833
2	93M-BOA-NAT-LOT-09170
3	93M-BOA-NAT-LOT-01976
4	93M-BOA-NAT-LOT-20021
5	
6	
7	
8	
9	

6TH OF OCTOBER CITY RAIL TRANSIT MONORAIL

The Authority | Consultant: Hill International | Main Contractor: ORASCOM CONSTRUCTION, BOMBARDIER | Structural Designer: INNOVA TRANSPORTATION

KEY PLAN:

6 October Monorail
Engineering Unit
Valid For Construction

SCALE: AS SHOWN | SHOPDRAWING | DATE: 12/05/2023

REV	DATE	DSG.	CHK.	APP.	AMENDMENTS	STATUS
B	12/05/2023	M.KH	M.KH	DR.M.M	ISSUED FOR INFORMATION	IFI
A	11/20/2022	M.KH	M.KH	DR.M.M	ISSUED FOR INFORMATION	IFI

DRAWING TITLE
6TH OF OCTOBER MONORAIL
SERVICE WALKWAYS
ZONE (1008)
Z8-HR007

Project Code	Rubric	Initiator	Lot	Ref	Number	Revision
93	M047	6ACC	60DE	PDWG	08248	B

Tekla structures

approval is subject to approval of coordination package between multi-discipline

REVIEWED WITH COMMENT
MONORAILS PROJECT

MATERIAL LIST FOR ASSEMBLY MK'D **Z8-HR008**

Mark	Profile	GRADE	No.	Length	Area	Weight
Z8-HR008	CHS48.3*4.0	S235JR	1	4503	0.68	19.69
W159	ROD32	S235JR	1	100	0.01	0.60
				Total	0.69	20.29

BOLT LIST:-

BOLT \ STUD	BOLT DESCRIPTION	QTY	FINISH

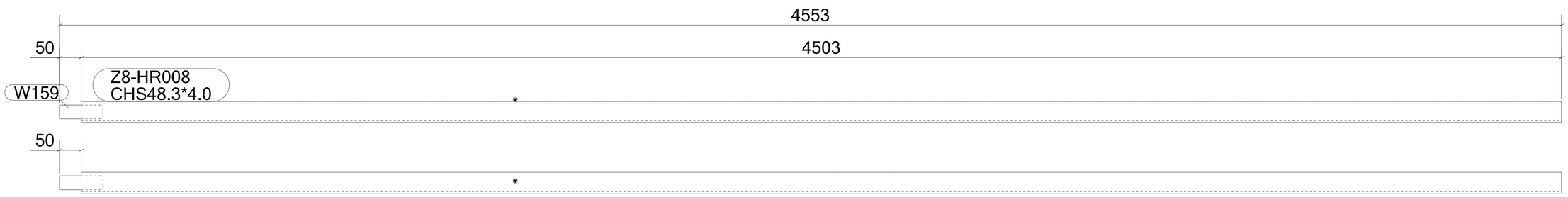

1 *REQUIRED AS DRAWN MARKED* **Z8-HR008**

6 October Monorail
Engineering Unit
Valid For Construction

GENERAL NOTES:

1. THE DIMENSIONS SHOWN ARE NOMINAL (IN MILLIMETERS), U.N.O.
2. WELD SIZESHALL BE AISC MINIMUM OF 6 mm UNLESS NOTED OTHERWISE.
3. ALL FIELD WELDS SHALL BE INSPECTED PER QUALITY ASSURANCE AND SPECIAL INSPECTIONS.

REFERENCE DRAWINGS

1	93M-BOA-NAT-LOT-04833
2	93M-BOA-NAT-LOT-09170
3	93M-BOA-NAT-LOT-01976
4	93M-BOA-NAT-LOT-20021
5	
6	
7	
8	
9	

6TH OF OCTOBER CITY RAIL TRANSIT MONORAIL

The Authority | Consultant: Hill International | Main Contractor: ORASCOM CONSTRUCTION, BOMBARDIER | Structural Designer: INNOVA TRANSPORTATION

KEY PLAN:

SCALE: AS SHOWN | SHOPDRAWING | DATE: 12/05/2023

REV	DATE	DSG.	CHK.	APP.	AMENDMENTS	STATUS
B	12/05/2023	M.KH	M.KH	DR.M.M	ISSUED FOR INFORMATION	IFI
A	11/20/2022	M.KH	M.KH	DR.M.M	ISSUED FOR INFORMATION	IFI

DRAWING TITLE
6TH OF OCTOBER MONORAIL
SERVICE WALKWAYS
ZONE (1008)
Z8-HR008

Project Code	Rubric	Initiator	Lot	Ref	Number	Revision
93M	047	6ACC	60DE	PDWG	08249	B

Tekla structures

approval is subject to approval of coordination package between multi-discipline

REVIEWED WITH COMMENT
MONORAILS PROJECT

MATERIAL LIST FOR ASSEMBLY MK'D **Z8-HR009**

Mark	Profile	GRADE	No.	Length	Area	Weight
Z8-HR009	CHS48.3*4.0	S235JR	1	2444	0.37	10.69
W159	ROD32	S235JR	1	100	0.01	0.60
W315	PL3*45	S355JR	1	45	0.00	0.03
				Total	0.38	11.32

BOLT LIST:-

BOLT \ STUD	BOLT DESCRIPTION	QTY	FINISH

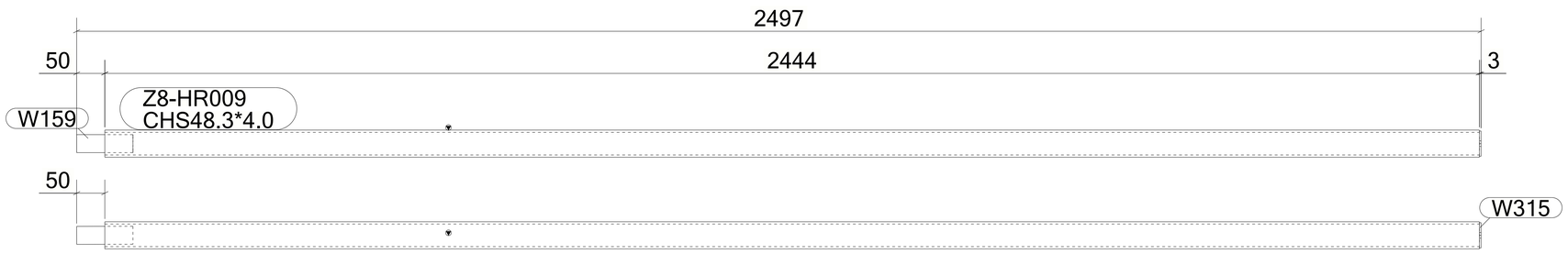

1 *REQUIRED AS DRAWN MARKED* **Z8-HR009**

6 October Monorail
Engineering Unit
Valid For Construction

GENERAL NOTES:

1. THE DIMENSIONS SHOWN ARE NOMINAL (IN MILLIMETERS), U.N.O.
2. WELD SIZESHALL BE AISC MINIMUM OF 6 mm UNLESS NOTED OTHERWISE.
3. ALL FIELD WELDS SHALL BE INSPECTED PER QUALITY ASSURANCE AND SPECIAL INSPECTIONS.

REFERENCE DRAWINGS

1	93M-BOA-NAT-LOT-04833
2	93M-BOA-NAT-LOT-09170
3	93M-BOA-NAT-LOT-01976
4	93M-BOA-NAT-LOT-20021
5	
6	
7	
8	
9	

6TH OF OCTOBER CITY RAIL TRANSIT MONORAIL

The Authority | Consultant: Hill International | Main Contractor: ORASCOM CONSTRUCTION, BOMBARDIER | Structural Designer: INNOVA TRANSPORTATION

KEY PLAN:

SCALE: AS SHOWN | SHOPDRAWING | DATE: 12/05/2023

REV	DATE	DSG.	CHK.	APP.	AMENDMENTS	STATUS
B	12/05/2023	M.KH	M.KH	DR.M.M	ISSUED FOR INFORMATION	IFI
A	11/20/2022	M.KH	M.KH	DR.M.M	ISSUED FOR INFORMATION	IFI

DRAWING TITLE
6TH OF OCTOBER MONORAIL
SERVICE WALKWAYS
ZONE (1008)
Z8-HR009

Project Code	Rubric	Initiator	Lot	Ref	Number	Revision
9 3 M	0 4 7 6	A C C	6 0 D E P	D W G	0 8 2 5 0	B

Tekla structures

approval is subject to approval of coordination package between multi-discipline

REVIEWED WITH COMMENT
MONORAILS PROJECT

MATERIAL LIST FOR ASSEMBLY MK'D **Z8-HR010**

Mark	Profile	GRADE	No.	Length	Area	Weight
Z8-HR010	CHS48.3*4.0	S235JR	1	999	0.15	4.37
W315	PL3*45	S355JR	2	45	0.00	0.03
				Total	0.16	4.44

BOLT LIST:-

BOLT \ STUD	BOLT DESCRIPTION	QTY	FINISH

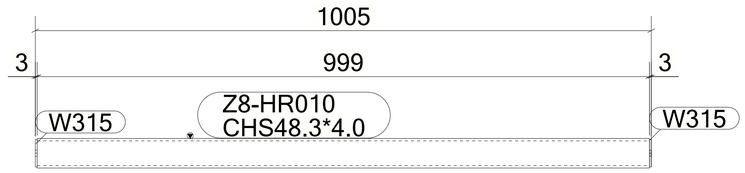

1 *REQUIRED AS DRAWN MARKED* **Z8-HR010**

6 October Monorail
Engineering Unit
Valid For Construction

GENERAL NOTES:

1. THE DIMENSIONS SHOWN ARE NOMINAL (IN MILLIMETERS), U.N.O.
2. WELD SIZESHALL BE AISC MINIMUM OF 6 mm UNLESS NOTED OTHERWISE.
3. ALL FIELD WELDS SHALL BE INSPECTED PER QUALITY ASSURANCE AND SPECIAL INSPECTIONS.

REFERENCE DRAWINGS

1	93M-BOA-NAT-LOT-04833
2	93M-BOA-NAT-LOT-09170
3	93M-BOA-NAT-LOT-01976
4	93M-BOA-NAT-LOT-20021
5	
6	
7	
8	
9	

6TH OF OCTOBER CITY RAIL TRANSIT MONORAIL

The Authority | Consultant: Hill International | Main Contractor: ORASCOM CONSTRUCTION, BOMBARDIER | Structural Designer: INNOVA TRANSPORTATION

KEY PLAN:

SCALE	SHOPDRAWING	DATE
AS SHOWN		12/05/2023

REV	DATE	DSG.	CHK.	APP.	AMENDMENTS	STATUS
B	12/05/2023	M.KH	M.KH	DR.M.M	ISSUED FOR INFORMATION	IFI
A	11/20/2022	M.KH	M.KH	DR.M.M	ISSUED FOR INFORMATION	IFI

DRAWING TITLE
6TH OF OCTOBER MONORAIL
SERVICE WALKWAYS
ZONE (1008)
Z8-HR010

Project Code	Rubric	Initiator	Lot	Ref	Number	Revision
9 3 M 0 4 7 6	A C C	6 0 D E P	D W G	0 8 2 5 1		B

Tekla structures

approval is subject to approval of coordination package between multi-discipline

REVIEWED WITH COMMENT
MONORAILS PROJECT

MATERIAL LIST FOR ASSEMBLY MK'D **Z8-HR011**

Mark	Profile	GRADE	No.	Length	Area	Weight
Z8-HR011	CHS48.3*4.0	S235JR	1	1799	0.27	7.86
W159	ROD32	S235JR	1	100	0.01	0.60
				Total	0.28	8.47

BOLT LIST:-

BOLT \ STUD	BOLT DESCRIPTION	QTY	FINISH

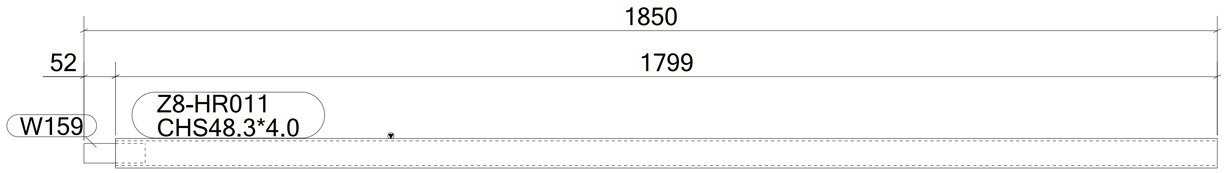

1 *REQUIRED AS DRAWN MARKED* **Z8-HR011**

6 October Monorail
Engineering Unit
Valid For Construction

GENERAL NOTES:

1. THE DIMENSIONS SHOWN ARE NOMINAL (IN MILLIMETERS), U.N.O.
2. WELD SIZESHALL BE AISC MINIMUM OF 6 mm UNLESS NOTED OTHERWISE.
3. ALL FIELD WELDS SHALL BE INSPECTED PER QUALITY ASSURANCE AND SPECIAL INSPECTIONS.

REFERENCE DRAWINGS

1	93M-BOA-NAT-LOT-04833
2	93M-BOA-NAT-LOT-09170
3	93M-BOA-NAT-LOT-01976
4	93M-BOA-NAT-LOT-20021
5	
6	
7	
8	
9	

6TH OF OCTOBER CITY RAIL TRANSIT MONORAIL

The Authority | Consultant: Hill International | Main Contractor: ORASCOM CONSTRUCTION, BOMBARDIER | Structural Designer: INNOVA TRANSPORTATION

KEY PLAN:

SCALE	SHOPDRAWING	DATE
AS SHOWN		12/05/2023

REV	DATE	DSG.	CHK.	APP.	AMENDMENTS	STATUS
B	12/05/2023	M.KH	M.KH	DR.M.M	ISSUED FOR INFORMATION	IFI
A	11/20/2022	M.KH	M.KH	DR.M.M	ISSUED FOR INFORMATION	IFI

DRAWING TITLE
6TH OF OCTOBER MONORAIL
SERVICE WALKWAYS
ZONE (1008)
Z8-HR011

Project Code	Rubric	Initiator	Lot	Ref	Number	Revision
9 3 M 0 4 7 6	A C C	6 0 D E P	D W G	0 8 2 5 2		B

Tekla structures

approval is subject to approval of coordination package between multi-discipline

REVIEWED WITH COMMENT MONORAILS PROJECT

MATERIAL LIST FOR ASSEMBLY MK'D **Z8-HR012**

Mark	Profile	GRADE	No.	Length	Area	Weight
Z8-HR012	CHS48.3*4.0	S235JR	1	1975	0.30	8.63
W159	ROD32	S235JR	1	100	0.01	0.60
				Total	0.31	9.24

BOLT LIST:-

BOLT \ STUD	BOLT DESCRIPTION	QTY	FINISH

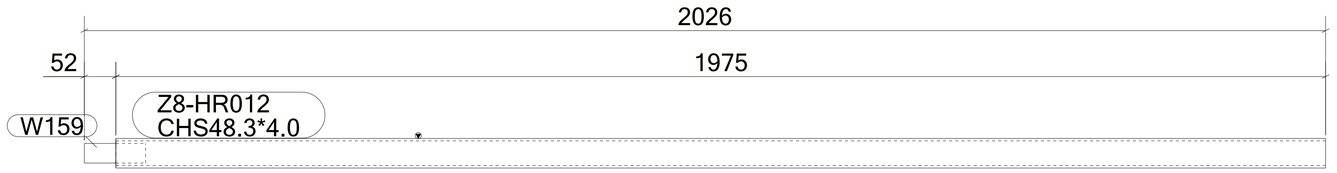

1 *REQUIRED AS DRAWN MARKED* **Z8-HR012**

6 October Monorail Engineering Unit
Valid For Construction

GENERAL NOTES:

1. THE DIMENSIONS SHOWN ARE NOMINAL (IN MILLIMETERS), U.N.O.
2. WELD SIZESHALL BE AISC MINIMUM OF 6 mm UNLESS NOTED OTHERWISE.
3. ALL FIELD WELDS SHALL BE INSPECTED PER QUALITY ASSURANCE AND SPECIAL INSPECTIONS.

REFERENCE DRAWINGS

1	93M-BOA-NAT-LOT-04833
2	93M-BOA-NAT-LOT-09170
3	93M-BOA-NAT-LOT-01976
4	93M-BOA-NAT-LOT-20021
5	
6	
7	
8	
9	

6TH OF OCTOBER CITY RAIL TRANSIT MONORAIL

The Authority | Hill International Consultant | ORASCOM BOMBARDIER Main Contractor | INNOVA Structural Designer

KEY PLAN:

SCALE	SHOPDRAWING	DATE
AS SHOWN		12/05/2023

REV	DATE	DSG.	CHK.	APP.	AMENDMENTS	STATUS
B	12/05/2023	M.KH	M.KH	DR.M.M	ISSUED FOR INFORMATION	IFI
A	11/20/2022	M.KH	M.KH	DR.M.M	ISSUED FOR INFORMATION	IFI

DRAWING TITLE
6TH OF OCTOBER MONORAIL SERVICE WALKWAYS ZONE (1008)
Z8-HR012

Project Code	Rubric	Initiator	Lot	Ref	Number	Revision
93M	0476	ACC	60DEP	DWG	08253	B

Tekla structures

approval is subject to approval of coordination package between multi-discipline

REVIEWED WITH COMMENT
MONORAILS PROJECT

MATERIAL LIST FOR ASSEMBLY MK'D **Z8-HR013**

Mark	Profile	GRADE	No.	Length	Area	Weight
Z8-HR013	CHS48.3*4.0	S235JR	1	2842	0.43	12.43
W159	ROD32	S235JR	1	100	0.01	0.60
				Total	0.44	13.03

BOLT LIST:-

BOLT \ STUD	BOLT DESCRIPTION	QTY	FINISH

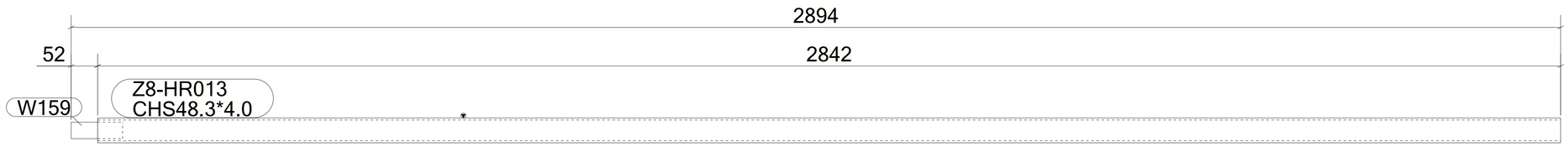

1 *REQUIRED AS DRAWN MARKED* **Z8-HR013**

6 October Monorail
Engineering Unit
Valid For Construction

GENERAL NOTES:

1. THE DIMENSIONS SHOWN ARE NOMINAL (IN MILLIMETERS), U.N.O.
2. WELD SIZESHALL BE AISC MINIMUM OF 6 mm UNLESS NOTED OTHERWISE.
3. ALL FIELD WELDS SHALL BE INSPECTED PER QUALITY ASSURANCE AND SPECIAL INSPECTIONS.

REFERENCE DRAWINGS

1	93M-BOA-NAT-LOT-04833
2	93M-BOA-NAT-LOT-09170
3	93M-BOA-NAT-LOT-01976
4	93M-BOA-NAT-LOT-20021
5	
6	
7	
8	
9	

6TH OF OCTOBER CITY RAIL TRANSIT MONORAIL

The Authority | Consultant: Hill International | Main Contractor: ORASCOM CONSTRUCTION, BOMBARDIER | Structural Designer: INNOVA TRANSPORTATION

KEY PLAN:

SCALE	SHOPDRAWING	DATE
AS SHOWN		12/05/2023

REV	DATE	DSG.	CHK.	APP.	AMENDMENTS	STATUS
B	12/05/2023	M.KH	M.KH	DR.M.M	ISSUED FOR INFORMATION	IFI
A	11/20/2022	M.KH	M.KH	DR.M.M	ISSUED FOR INFORMATION	IFI

DRAWING TITLE
6TH OF OCTOBER MONORAIL
SERVICE WALKWAYS
ZONE (1008)
Z8-HR013

Project Code	Rubric	Initiator	Lot	Ref	Number	Revision
9 3 M	0 4 7 6	A C C	6 0 D E P	D W G	0 8 2 5 4	B

Tekla structures

approval is subject to approval of coordination package between multi-discipline

REVIEWED WITH COMMENT
MONORAILS PROJECT

MATERIAL LIST FOR ASSEMBLY MK'D **Z8-HR014**

Mark	Profile	GRADE	No.	Length	Area	Weight
Z8-HR014	CHS48.3*4.0	S235JR	1	5722	0.86	25.02
W159	ROD32	S235JR	1	100	0.01	0.60
				Total	0.87	25.62

BOLT LIST:-

BOLT \ STUD	BOLT DESCRIPTION	QTY	FINISH

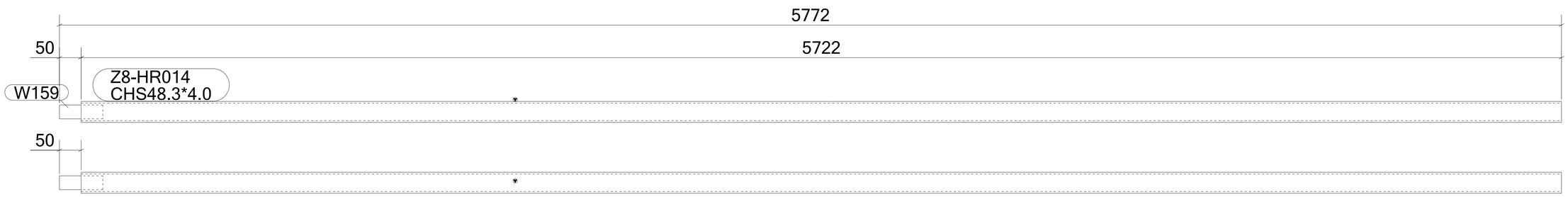

1 *REQUIRED AS DRAWN MARKED* **Z8-HR014**

6 October Monorail
Engineering Unit
Valid For Construction

GENERAL NOTES:

1. THE DIMENSIONS SHOWN ARE NOMINAL (IN MILLIMETERS), U.N.O.
2. WELD SIZESHALL BE AISC MINIMUM OF 6 mm UNLESS NOTED OTHERWISE.
3. ALL FIELD WELDS SHALL BE INSPECTED PER QUALITY ASSURANCE AND SPECIAL INSPECTIONS.

REFERENCE DRAWINGS

1	93M-BOA-NAT-LOT-04833
2	93M-BOA-NAT-LOT-09170
3	93M-BOA-NAT-LOT-01976
4	93M-BOA-NAT-LOT-20021
5	
6	
7	
8	
9	

6TH OF OCTOBER CITY RAIL TRANSIT MONORAIL

The Authority | Hill International Consultant | Main Contractor | Structural Designer

KEY PLAN:

SCALE	SHOPDRAWING	DATE
AS SHOWN		12/05/2023

REV	DATE	DSG.	CHK.	APP.	AMENDMENTS	STATUS
B	12/05/2023	M.KH	M.KH	DR.M.M	ISSUED FOR INFORMATION	IFI
A	11/20/2022	M.KH	M.KH	DR.M.M	ISSUED FOR INFORMATION	IFI

DRAWING TITLE
6TH OF OCTOBER MONORAIL
SERVICE WALKWAYS
ZONE (1008)
Z8-HR014

Project Code	Rubric	Initiator	Lot	Ref	Number	Revision
93M	047	6ACC	60DE	PDWG	08255	B

Tekla structures

approval is subject to approval of coordination package between multi-discipline

REVIEWED WITH COMMENT
MONORAILS PROJECT

MATERIAL LIST FOR ASSEMBLY MK'D **Z8-HR015**

Mark	Profile	GRADE	No.	Length	Area	Weight
Z8-HR015	CHS48.3*4.0	S235JR	1	3003	0.45	13.13
W159	ROD32	S235JR	1	100	0.01	0.60
				Total	0.46	13.73

BOLT LIST:-

BOLT \ STUD	BOLT DESCRIPTION	QTY	FINISH

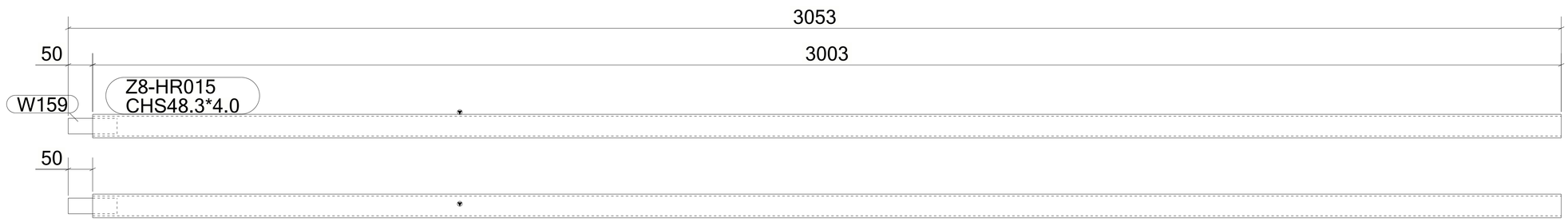

1 *REQUIRED AS DRAWN MARKED* **Z8-HR015**

6 October Monorail
Engineering Unit
Valid For Construction

GENERAL NOTES:

1. THE DIMENSIONS SHOWN ARE NOMINAL (IN MILLIMETERS), U.N.O.
2. WELD SIZESHALL BE AISC MINIMUM OF 6 mm UNLESS NOTED OTHERWISE.
3. ALL FIELD WELDS SHALL BE INSPECTED PER QUALITY ASSURANCE AND SPECIAL INSPECTIONS.

REFERENCE DRAWINGS

1	93M-BOA-NAT-LOT-04833
2	93M-BOA-NAT-LOT-09170
3	93M-BOA-NAT-LOT-01976
4	93M-BOA-NAT-LOT-20021
5	
6	
7	
8	
9	

6TH OF OCTOBER CITY RAIL TRANSIT MONORAIL

The Authority — Hill International Consultant — Main Contractor — Structural Designer

KEY PLAN:

SCALE: AS SHOWN | SHOPDRAWING | DATE: 12/05/2023

REV	DATE	DSG.	CHK.	APP.	AMENDMENTS	STATUS
B	12/05/2023	M.KH	M.KH	DR.M.M	ISSUED FOR INFORMATION	IFI
A	11/20/2022	M.KH	M.KH	DR.M.M	ISSUED FOR INFORMATION	IFI

DRAWING TITLE
6TH OF OCTOBER MONORAIL
SERVICE WALKWAYS
ZONE (1008)
Z8-HR015

Project Code	Rubric	Initiator	Lot	Ref	Number	Revision
93M	476	ACC	60DEP	DWG	08256	B

Tekla structures

approval is subject to approval of coordination package between multi-discipline

REVIEWED WITH COMMENT
MONORAILS PROJECT

MATERIAL LIST FOR ASSEMBLY MK'D **Z8-HR016**

Mark	Profile	GRADE	No.	Length	Area	Weight
Z8-HR016	CHS48.3*4.0	S235JR	1	3990	0.60	17.44
W159	ROD32	S235JR	1	100	0.01	0.60
				Total	0.61	18.05

BOLT LIST:-

BOLT \ STUD	BOLT DESCRIPTION	QTY	FINISH

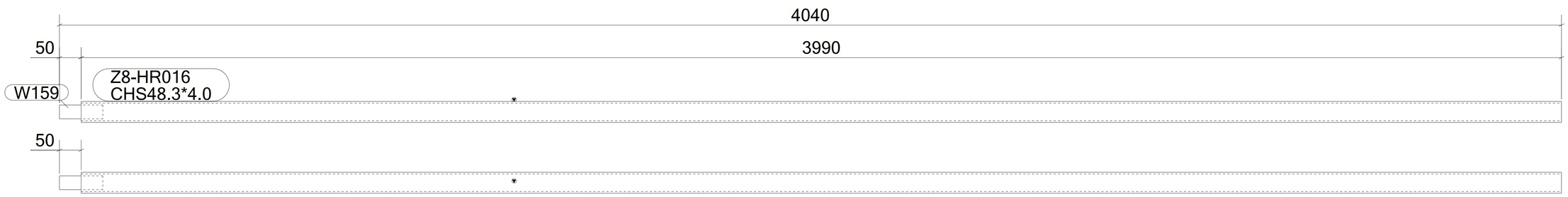

1 *REQUIRED AS DRAWN MARKED* **Z8-HR016**

6 October Monorail
Engineering Unit
Valid For Construction

GENERAL NOTES:

1. THE DIMENSIONS SHOWN ARE NOMINAL (IN MILLIMETERS), U.N.O.
2. WELD SIZESHALL BE AISC MINIMUM OF 6 mm UNLESS NOTED OTHERWISE.
3. ALL FIELD WELDS SHALL BE INSPECTED PER QUALITY ASSURANCE AND SPECIAL INSPECTIONS.

REFERENCE DRAWINGS

1	93M-BOA-NAT-LOT-04833
2	93M-BOA-NAT-LOT-09170
3	93M-BOA-NAT-LOT-01976
4	93M-BOA-NAT-LOT-20021
5	
6	
7	
8	
9	

6TH OF OCTOBER CITY RAIL TRANSIT MONORAIL

The Authority | Consultant: Hill International | Main Contractor: ORASCOM CONSTRUCTION, BOMBARDIER | Structural Designer: INNOVA TRANSPORTATION

KEY PLAN:

SCALE	SHOPDRAWING	DATE
AS SHOWN		12/05/2023

REV	DATE	DSG.	CHK.	APP.	AMENDMENTS	STATUS
B	12/05/2023	M.KH	M.KH	DR.M.M	ISSUED FOR INFORMATION	IFI
A	11/20/2022	M.KH	M.KH	DR.M.M	ISSUED FOR INFORMATION	IFI

DRAWING TITLE
6TH OF OCTOBER MONORAIL
SERVICE WALKWAYS
ZONE (1008)
Z8-HR016

Project Code	Rubric	Initiator	Lot	Ref	Number	Revision
93M	476	ACC	60DEP	DWG	08257	B

Tekla structures

approval is subject to approval of coordination package between multi-discipline

REVIEWED WITH COMMENT
MONORAILS PROJECT

MATERIAL LIST FOR ASSEMBLY MK'D **Z8-HR017**

Mark	Profile	GRADE	No.	Length	Area	Weight
Z8-HR017	CHS48.3*4.0	S235JR	1	5000	0.75	21.86
W159	ROD32	S235JR	1	100	0.01	0.60
				Total	0.76	22.47

BOLT LIST:-

BOLT \ STUD	BOLT DESCRIPTION	QTY	FINISH

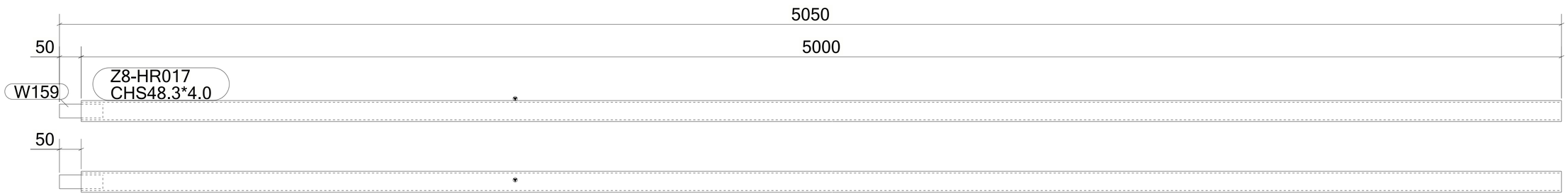

1 *REQUIRED AS DRAWN MARKED* **Z8-HR017**

6 October Monorail
Engineering Unit
Valid For Construction

GENERAL NOTES:

1. THE DIMENSIONS SHOWN ARE NOMINAL (IN MILLIMETERS), U.N.O.
2. WELD SIZESHALL BE AISC MINIMUM OF 6 mm UNLESS NOTED OTHERWISE.
3. ALL FIELD WELDS SHALL BE INSPECTED PER QUALITY ASSURANCE AND SPECIAL INSPECTIONS.

REFERENCE DRAWINGS

1	93M-BOA-NAT-LOT-04833
2	93M-BOA-NAT-LOT-09170
3	93M-BOA-NAT-LOT-01976
4	93M-BOA-NAT-LOT-20021
5	
6	
7	
8	
9	

6TH OF OCTOBER CITY RAIL TRANSIT MONORAIL

The Authority | Hill International Consultant | Main Contractor | Structural Designer

KEY PLAN:

SCALE: AS SHOWN | SHOPDRAWING | DATE: 12/05/2023

REV	DATE	DSG.	CHK.	APP.	AMENDMENTS	STATUS
B	12/05/2023	M.KH	M.KH	DR.M.M	ISSUED FOR INFORMATION	IFI
A	11/20/2022	M.KH	M.KH	DR.M.M	ISSUED FOR INFORMATION	IFI

DRAWING TITLE
6TH OF OCTOBER MONORAIL
SERVICE WALKWAYS
ZONE (1008)
Z8-HR017

Project Code	Rubric	Initiator	Lot	Ref	Number	Revision
9 3	M 0 4 7 6	A C C	6 0 D E P	D W G	0 8 2 5 8	B

Tekla structures

approval is subject to approval of coordination package between multi-discipline

REVIEWED WITH COMMENT
MONORAILS PROJECT

MATERIAL LIST FOR ASSEMBLY MK'D **Z8-HR018**

Mark	Profile	GRADE	No.	Length	Area	Weight
Z8-HR018	CHS48.3*4.0	S235JR	1	5994	0.90	26.21
W159	ROD32	S235JR	1	100	0.01	0.60
				Total	0.91	26.81

BOLT LIST:-

BOLT \ STUD	BOLT DESCRIPTION	QTY	FINISH

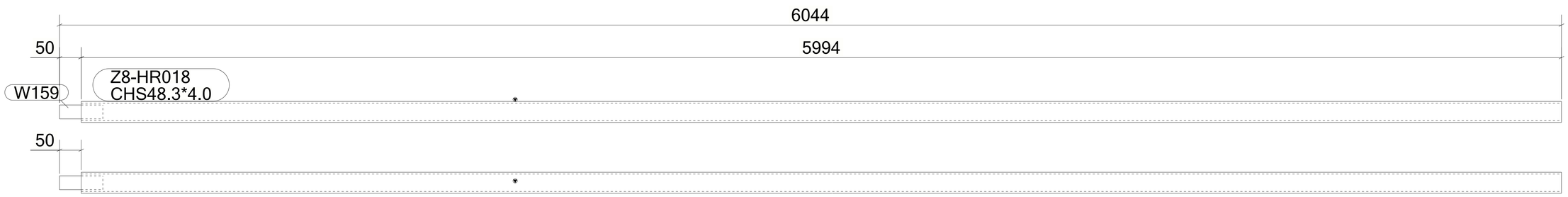

1 *REQUIRED AS DRAWN MARKED* **Z8-HR018**

6 October Monorail
Engineering Unit
Valid For Construction

GENERAL NOTES:

1. THE DIMENSIONS SHOWN ARE NOMINAL (IN MILLIMETERS), U.N.O.
2. WELD SIZESHALL BE AISC MINIMUM OF 6 mm UNLESS NOTED OTHERWISE.
3. ALL FIELD WELDS SHALL BE INSPECTED PER QUALITY ASSURANCE AND SPECIAL INSPECTIONS.

REFERENCE DRAWINGS

1	93M-BOA-NAT-LOT-04833
2	93M-BOA-NAT-LOT-09170
3	93M-BOA-NAT-LOT-01976
4	93M-BOA-NAT-LOT-20021
5	
6	
7	
8	
9	

6TH OF OCTOBER CITY RAIL TRANSIT MONORAIL

The Authority | Hill International Consultant | Main Contractor | Structural Designer

KEY PLAN:

SCALE: AS SHOWN | SHOPDRAWING | DATE: 12/05/2023

REV	DATE	DSG.	CHK.	APP.	AMENDMENTS	STATUS
B	12/05/2023	M.KH	M.KH	DR.M.M	ISSUED FOR INFORMATION	IFI
A	11/20/2022	M.KH	M.KH	DR.M.M	ISSUED FOR INFORMATION	IFI

DRAWING TITLE
6TH OF OCTOBER MONORAIL
SERVICE WALKWAYS
ZONE (1008)
Z8-HR018

Project Code	Rubric	Initiator	Lot	Ref	Number	Revision
93M	476	ACC	60DEP	DWG	08259	B

Tekla structures

approval is subject to approval of coordination package between multi-discipline

REVIEWED WITH COMMENT
MONORAILS PROJECT

MATERIAL LIST FOR ASSEMBLY MK'D **Z8-HR019**

Mark	Profile	GRADE	No.	Length	Area	Weight
Z8-HR019	CHS48.3*4.0	S235JR	1	2846	0.43	12.44
W159	ROD32	S235JR	1	100	0.01	0.60
				Total	0.44	13.05

BOLT LIST:-

BOLT \ STUD	BOLT DESCRIPTION	QTY	FINISH

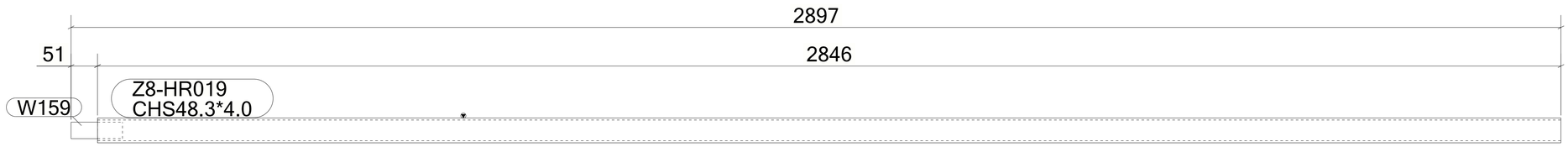

1 *REQUIRED AS DRAWN MARKED* **Z8-HR019**

6 October Monorail
Engineering Unit
Valid For Construction

GENERAL NOTES:

1. THE DIMENSIONS SHOWN ARE NOMINAL (IN MILLIMETERS), U.N.O.
2. WELD SIZESHALL BE AISC MINIMUM OF 6 mm UNLESS NOTED OTHERWISE.
3. ALL FIELD WELDS SHALL BE INSPECTED PER QUALITY ASSURANCE AND SPECIAL INSPECTIONS.

REFERENCE DRAWINGS

1	93M-BOA-NAT-LOT-04833
2	93M-BOA-NAT-LOT-09170
3	93M-BOA-NAT-LOT-01976
4	93M-BOA-NAT-LOT-20021
5	
6	
7	
8	
9	

6TH OF OCTOBER CITY RAIL TRANSIT MONORAIL

The Authority | Hill International Consultant | Main Contractor | Structural Designer

KEY PLAN:

SCALE: AS SHOWN | SHOPDRAWING | DATE: 12/05/2023

REV	DATE	DSG.	CHK.	APP.	AMENDMENTS	STATUS
B	12/05/2023	M.KH	M.KH	DR.M.M	ISSUED FOR INFORMATION	IFI
A	11/20/2022	M.KH	M.KH	DR.M.M	ISSUED FOR INFORMATION	IFI

DRAWING TITLE
6TH OF OCTOBER MONORAIL
SERVICE WALKWAYS
ZONE (1008)
Z8-HR019

Project Code	Rubric	Initiator	Lot	Ref	Number	Revision
93M047	6ACC	60DE	P	DWG	0826	B

Tekla structures

approval is subject to approval of coordination package between multi-discipline

REVIEWED WITH COMMENT
MONORAILS PROJECT

MATERIAL LIST FOR ASSEMBLY MK'D **Z8-HR020**

Mark	Profile	GRADE	No.	Length	Area	Weight
Z8-HR020	CHS48.3*4.0	S235JR	1	4636	0.70	20.27
W159	ROD32	S235JR	1	100	0.01	0.60
				Total	0.71	20.87

BOLT LIST:-

BOLT \ STUD	BOLT DESCRIPTION	QTY	FINISH

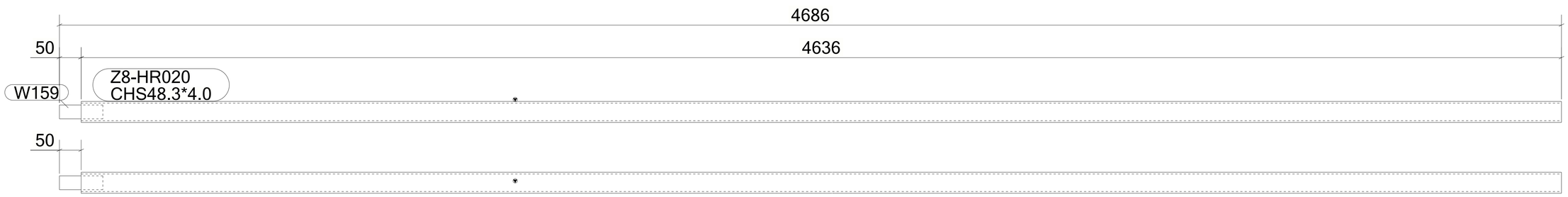

1 *REQUIRED AS DRAWN MARKED* **Z8-HR020**

6 October Monorail
Engineering Unit
Valid For Construction

GENERAL NOTES:

1. THE DIMENSIONS SHOWN ARE NOMINAL (IN MILLIMETERS), U.N.O.
2. WELD SIZESHALL BE AISC MINIMUM OF 6 mm UNLESS NOTED OTHERWISE.
3. ALL FIELD WELDS SHALL BE INSPECTED PER QUALITY ASSURANCE AND SPECIAL INSPECTIONS.

REFERENCE DRAWINGS

1	93M-BOA-NAT-LOT-04833
2	93M-BOA-NAT-LOT-09170
3	93M-BOA-NAT-LOT-01976
4	93M-BOA-NAT-LOT-20021
5	
6	
7	
8	
9	

6TH OF OCTOBER CITY RAIL TRANSIT MONORAIL

The Authority | Consultant: Hill International | Main Contractor: ORASCOM CONSTRUCTION, BOMBARDIER | Structural Designer: INNOVA TRANSPORTATION

KEY PLAN:

SCALE	SHOPDRAWING	DATE
AS SHOWN		12/05/2023

REV	DATE	DSG.	CHK.	APP.	AMENDMENTS	STATUS
B	12/05/2023	M.KH	M.KH	DR.M.M	ISSUED FOR INFORMATION	IFI
A	11/20/2022	M.KH	M.KH	DR.M.M	ISSUED FOR INFORMATION	IFI

DRAWING TITLE
6TH OF OCTOBER MONORAIL
SERVICE WALKWAYS
ZONE (1008)
Z8-HR020

Project Code	Rubric	Initiator	Lot	Ref	Number	Revision
93M	047	6ACC	60DE	PDWG	0826	1 B

Tekla structures

approval is subject to approval of coordination package between multi-discipline

REVIEWED WITH COMMENT
MONORAILS PROJECT

MATERIAL LIST FOR ASSEMBLY MK'D **Z8-HR021**

Mark	Profile	GRADE	No.	Length	Area	Weight
Z8-HR021	CHS48.3*4.0	S235JR	1	4496	0.67	19.66
W159	ROD32	S235JR	1	100	0.01	0.60
				Total	0.69	20.26

BOLT LIST:-

BOLT \ STUD	BOLT DESCRIPTION	QTY	FINISH

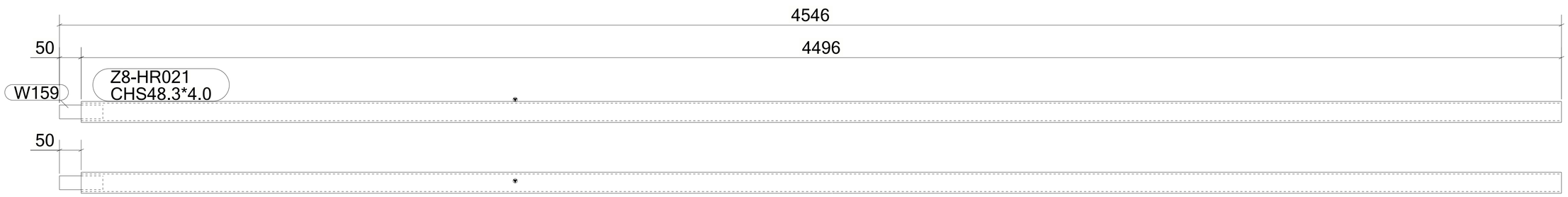

1 *REQUIRED AS DRAWN MARKED* **Z8-HR021**

6 October Monorail
Engineering Unit
Valid For Construction

GENERAL NOTES:

1. THE DIMENSIONS SHOWN ARE NOMINAL (IN MILLIMETERS), U.N.O.
2. WELD SIZESHALL BE AISC MINIMUM OF 6 mm UNLESS NOTED OTHERWISE.
3. ALL FIELD WELDS SHALL BE INSPECTED PER QUALITY ASSURANCE AND SPECIAL INSPECTIONS.

REFERENCE DRAWINGS

1	93M-BOA-NAT-LOT-04833
2	93M-BOA-NAT-LOT-09170
3	93M-BOA-NAT-LOT-01976
4	93M-BOA-NAT-LOT-20021
5	
6	
7	
8	
9	

6TH OF OCTOBER CITY RAIL TRANSIT MONORAIL

The Authority — Consultant — Main Contractor — Structural Designer

KEY PLAN:

REV	DATE	DSG.	CHK.	APP.	AMENDMENTS	STATUS
B	12/05/2023	M.KH	M.KH	DR.M.M	ISSUED FOR INFORMATION	IFI
A	11/20/2022	M.KH	M.KH	DR.M.M	ISSUED FOR INFORMATION	IFI

SCALE: AS SHOWN | SHOPDRAWING | DATE: 12/05/2023

DRAWING TITLE
6TH OF OCTOBER MONORAIL
SERVICE WALKWAYS
ZONE (1008)
Z8-HR021

Project Code	Rubric	Initiator	Lot	Ref	Number	Revision
93M	047	6ACC	60DE	PDWG	08262	B

Tekla structures

approval is subject to approval of coordination package between multi-discipline

REVIEWED WITH COMMENT
MONORAILS PROJECT

MATERIAL LIST FOR ASSEMBLY MK'D **Z8-HR022**

Mark	Profile	GRADE	No.	Length	Area	Weight
Z8-HR022	CHS48.3*4.0	S235JR	1	2752	0.41	12.03
W159	ROD32	S235JR	1	100	0.01	0.60
				Total	0.42	12.64

BOLT LIST:-

BOLT \ STUD	BOLT DESCRIPTION	QTY	FINISH

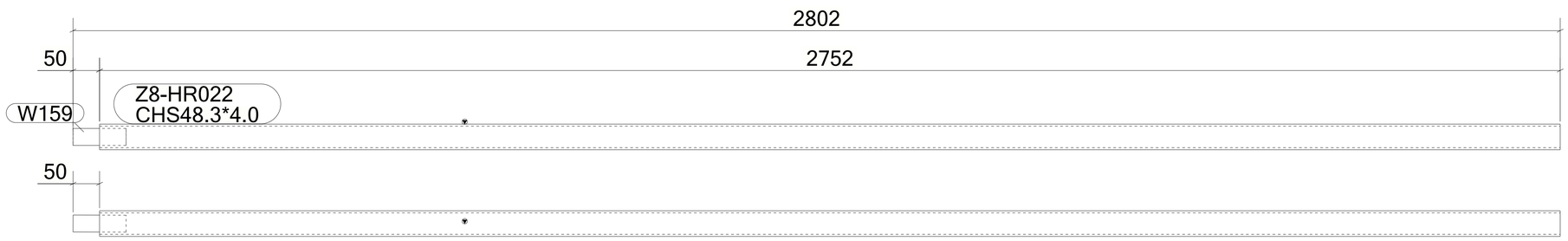

1 *REQUIRED AS DRAWN MARKED* **Z8-HR022**

6 October Monorail
Engineering Unit
Valid For Construction

GENERAL NOTES:

1. THE DIMENSIONS SHOWN ARE NOMINAL (IN MILLIMETERS), U.N.O.
2. WELD SIZESHALL BE AISC MINIMUM OF 6 mm UNLESS NOTED OTHERWISE.
3. ALL FIELD WELDS SHALL BE INSPECTED PER QUALITY ASSURANCE AND SPECIAL INSPECTIONS.

REFERENCE DRAWINGS

1	93M-BOA-NAT-LOT-04833
2	93M-BOA-NAT-LOT-09170
3	93M-BOA-NAT-LOT-01976
4	93M-BOA-NAT-LOT-20021
5	
6	
7	
8	
9	

6TH OF OCTOBER CITY RAIL TRANSIT MONORAIL

The Authority | Consultant: Hill International | Main Contractor: ORASCOM CONSTRUCTION, BOMBARDIER | Structural Designer: INNOVA TRANSPORTATION

KEY PLAN:

SCALE: AS SHOWN | SHOPDRAWING | DATE: 12/05/2023

REV	DATE	DSG.	CHK.	APP.	AMENDMENTS	STATUS
B	12/05/2023	M.KH	M.KH	DR.M.M	ISSUED FOR INFORMATION	IFI
A	11/20/2022	M.KH	M.KH	DR.M.M	ISSUED FOR INFORMATION	IFI

DRAWING TITLE
6TH OF OCTOBER MONORAIL
SERVICE WALKWAYS
ZONE (1008)
Z8-HR022

Project Code	Rubric	Initiator	Lot	Ref	Number	Revision
93	M047	6ACC	60DE	PDWG	08263	B

Tekla structures

approval is subject to approval of coordination package between multi-discipline

REVIEWED WITH COMMENT
MONORAILS PROJECT

MATERIAL LIST FOR ASSEMBLY MK'D **Z8-HR023**

Mark	Profile	GRADE	No.	Length	Area	Weight
Z8-HR023	CHS48.3*4.0	S235JR	1	1803	0.27	7.88
W159	ROD32	S235JR	1	100	0.01	0.60
				Total	0.28	8.49

BOLT LIST:-

BOLT \ STUD	BOLT DESCRIPTION	QTY	FINISH

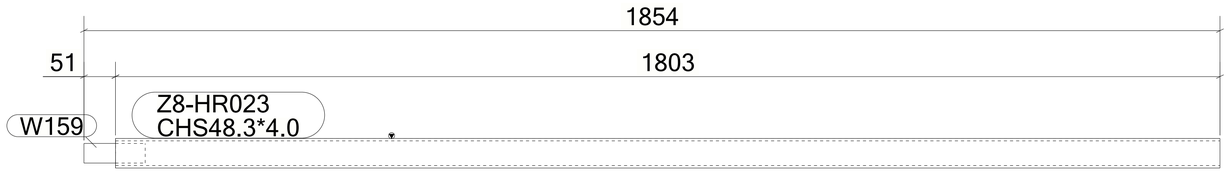

1 *REQUIRED AS DRAWN MARKED* **Z8-HR023**

6 October Monorail
Engineering Unit
Valid For Construction

GENERAL NOTES:

1. THE DIMENSIONS SHOWN ARE NOMINAL (IN MILLIMETERS), U.N.O.
2. WELD SIZESHALL BE AISC MINIMUM OF 6 mm UNLESS NOTED OTHERWISE.
3. ALL FIELD WELDS SHALL BE INSPECTED PER QUALITY ASSURANCE AND SPECIAL INSPECTIONS.

REFERENCE DRAWINGS

1	93M-BOA-NAT-LOT-04833
2	93M-BOA-NAT-LOT-09170
3	93M-BOA-NAT-LOT-01976
4	93M-BOA-NAT-LOT-20021
5	
6	
7	
8	
9	

6TH OF OCTOBER CITY RAIL TRANSIT MONORAIL

The Authority | Consultant: Hill International | Main Contractor: ORASCOM CONSTRUCTION, BOMBARDIER | Structural Designer: INNOVA TRANSPORTATION

KEY PLAN:

SCALE	SHOPDRAWING	DATE
AS SHOWN		12/05/2023

REV	DATE	DSG.	CHK.	APP.	AMENDMENTS	STATUS
B	12/05/2023	M.KH	M.KH	DR.M.M	ISSUED FOR INFORMATION	IFI
A	11/20/2022	M.KH	M.KH	DR.M.M	ISSUED FOR INFORMATION	IFI

DRAWING TITLE
6TH OF OCTOBER MONORAIL
SERVICE WALKWAYS
ZONE (1008)
Z8-HR023

Project Code	Rubric	Initiator	Lot	Ref	Number	Revision
9 3 M 0 4 7 6	A C C	6 0 D E P	D W G	0 8 2 6 4		B

Tekla structures

approval is subject to approval of coordination package between multi-discipline

REVIEWED WITH COMMENT
MONORAILS PROJECT

MATERIAL LIST FOR ASSEMBLY MK'D **Z8-HR024**

Mark	Profile	GRADE	No.	Length	Area	Weight
Z8-HR024	CHS48.3*4.0	S235JR	1	2827	0.42	12.36
W159	ROD32	S235JR	1	100	0.01	0.60
				Total	0.44	12.96

BOLT LIST:-

BOLT \ STUD	BOLT DESCRIPTION	QTY	FINISH

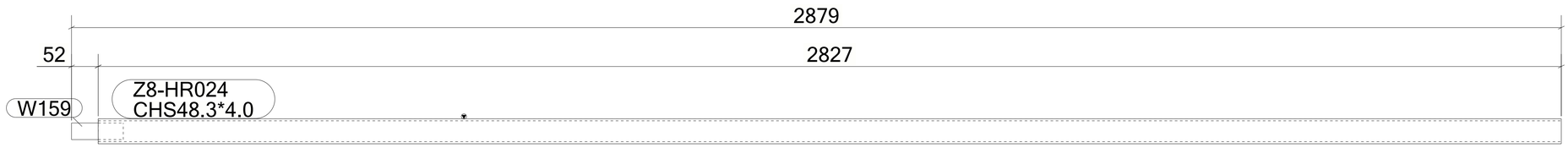

1 *REQUIRED AS DRAWN MARKED* **Z8-HR024**

6 October Monorail
Engineering Unit
Valid For Construction

GENERAL NOTES:

1. THE DIMENSIONS SHOWN ARE NOMINAL (IN MILLIMETERS), U.N.O.
2. WELD SIZESHALL BE AISC MINIMUM OF 6 mm UNLESS NOTED OTHERWISE.
3. ALL FIELD WELDS SHALL BE INSPECTED PER QUALITY ASSURANCE AND SPECIAL INSPECTIONS.

REFERENCE DRAWINGS

1	93M-BOA-NAT-LOT-04833
2	93M-BOA-NAT-LOT-09170
3	93M-BOA-NAT-LOT-01976
4	93M-BOA-NAT-LOT-20021
5	
6	
7	
8	
9	

6TH OF OCTOBER CITY RAIL TRANSIT MONORAIL

The Authority | Consultant: Hill International | Main Contractor: ORASCOM CONSTRUCTION, BOMBARDIER | Structural Designer: INNOVA TRANSPORTATION

KEY PLAN:

SCALE: AS SHOWN | SHOPDRAWING | DATE: 12/05/2023

REV	DATE	DSG.	CHK.	APP.	AMENDMENTS	STATUS
B	12/05/2023	M.KH	M.KH	DR.M.M	ISSUED FOR INFORMATION	IFI
A	11/20/2022	M.KH	M.KH	DR.M.M	ISSUED FOR INFORMATION	IFI

DRAWING TITLE
6TH OF OCTOBER MONORAIL
SERVICE WALKWAYS
ZONE (1008)
Z8-HR024

Project Code	Rubric	Initiator	Lot	Ref	Number	Revision
93M047	6ACC	60DE	P	DWG	08265	B

Tekla structures

approval is subject to approval of coordination package between multi-discipline

REVIEWED WITH COMMENT
MONORAILS PROJECT

MATERIAL LIST FOR ASSEMBLY MK'D **Z8-HR025**

Mark	Profile	GRADE	No.	Length	Area	Weight
Z8-HR025	CHS48.3*4.0	S235JR	1	1973	0.30	8.63
W159	ROD32	S235JR	1	100	0.01	0.60
				Total	0.31	9.23

BOLT LIST:-

BOLT \ STUD	BOLT DESCRIPTION	QTY	FINISH

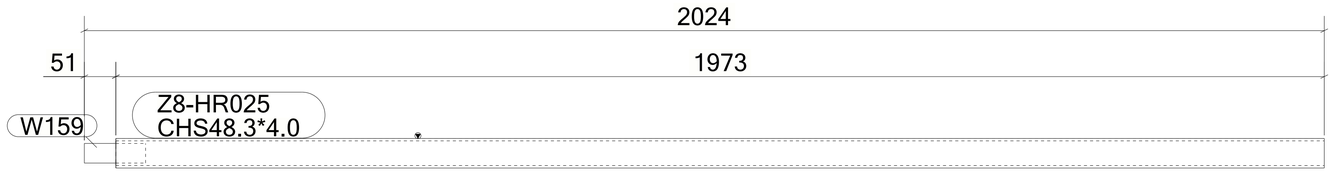

1 *REQUIRED AS DRAWN MARKED* **Z8-HR025**

6 October Monorail
Engineering Unit
Valid For Construction

GENERAL NOTES:

1. THE DIMENSIONS SHOWN ARE NOMINAL (IN MILLIMETERS), U.N.O.
2. WELD SIZESHALL BE AISC MINIMUM OF 6 mm UNLESS NOTED OTHERWISE.
3. ALL FIELD WELDS SHALL BE INSPECTED PER QUALITY ASSURANCE AND SPECIAL INSPECTIONS.

REFERENCE DRAWINGS

1	93M-BOA-NAT-LOT-04833
2	93M-BOA-NAT-LOT-09170
3	93M-BOA-NAT-LOT-01976
4	93M-BOA-NAT-LOT-20021
5	
6	
7	
8	
9	

6TH OF OCTOBER CITY RAIL TRANSIT MONORAIL

The Authority | Consultant: Hill International | Main Contractor: ORASCOM CONSTRUCTION, BOMBARDIER | Structural Designer: INNOVA TRANSPORTATION

KEY PLAN:

SCALE: AS SHOWN | SHOPDRAWING | DATE: 12/05/2023

REV	DATE	DSG.	CHK.	APP.	AMENDMENTS	STATUS
B	12/05/2023	M.KH	M.KH	DR.M.M	ISSUED FOR INFORMATION	IFI
A	11/20/2022	M.KH	M.KH	DR.M.M	ISSUED FOR INFORMATION	IFI

DRAWING TITLE
6TH OF OCTOBER MONORAIL
SERVICE WALKWAYS
ZONE (1008)
Z8-HR025

Project Code	Rubric	Initiator	Lot	Ref	Number	Revision
93M047	6ACC	60DE	P	DWG	08266	B

Tekla structures

approval is subject to approval of coordination package between multi-discipline

REVIEWED WITH COMMENT
MONORAILS PROJECT

MATERIAL LIST FOR ASSEMBLY MK'D **Z8-HR026**

Mark	Profile	GRADE	No.	Length	Area	Weight
Z8-HR026	CHS48.3*4.0	S235JR	1	2977	0.45	13.02
W159	ROD32	S235JR	1	100	0.01	0.60
				Total	0.46	13.62

BOLT LIST:-

BOLT \ STUD	BOLT DESCRIPTION	QTY	FINISH

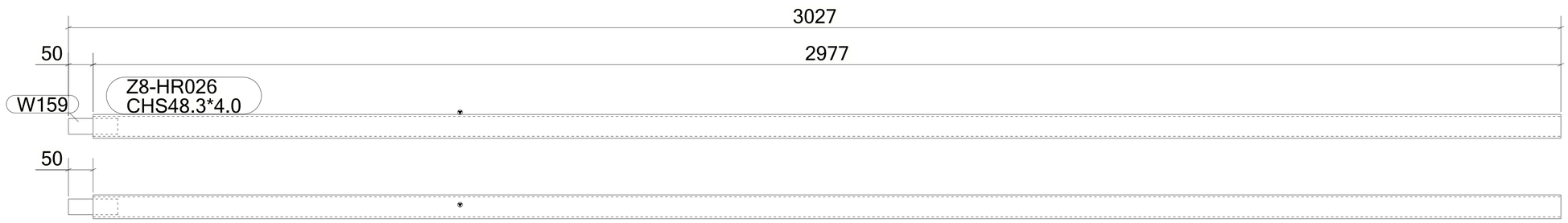

1 *REQUIRED AS DRAWN MARKED* **Z8-HR026**

6 October Monorail
Engineering Unit
Valid For Construction

GENERAL NOTES:

1. THE DIMENSIONS SHOWN ARE NOMINAL (IN MILLIMETERS), U.N.O.
2. WELD SIZESHALL BE AISC MINIMUM OF 6 mm UNLESS NOTED OTHERWISE.
3. ALL FIELD WELDS SHALL BE INSPECTED PER QUALITY ASSURANCE AND SPECIAL INSPECTIONS.

REFERENCE DRAWINGS

1	93M-BOA-NAT-LOT-04833
2	93M-BOA-NAT-LOT-09170
3	93M-BOA-NAT-LOT-01976
4	93M-BOA-NAT-LOT-20021
5	
6	
7	
8	
9	

6TH OF OCTOBER CITY RAIL TRANSIT MONORAIL

The Authority — Hill International Consultant — Main Contractor — Structural Designer

KEY PLAN:

SCALE: AS SHOWN | SHOPDRAWING | DATE: 12/05/2023

REV	DATE	DSG.	CHK.	APP.	AMENDMENTS	STATUS
B	12/05/2023	M.KH	M.KH	DR.M.M	ISSUED FOR INFORMATION	IFI
A	11/20/2022	M.KH	M.KH	DR.M.M	ISSUED FOR INFORMATION	IFI

DRAWING TITLE
6TH OF OCTOBER MONORAIL SERVICE WALKWAYS ZONE (1008)
Z8-HR026

Project Code	Rubric	Initiator	Lot	Ref	Number	Revision
93M	047	6ACC	60DE	PDWG	08267	B

Tekla structures

approval is subject to approval of coordination package between multi-discipline

REVIEWED WITH COMMENT
MONORAILS PROJECT

MATERIAL LIST FOR ASSEMBLY MK'D **Z8-HR027**

Mark	Profile	GRADE	No.	Length	Area	Weight
Z8-HR027	CHS48.3*4.0	S235JR	1	2849	0.43	12.46
W159	ROD32	S235JR	1	100	0.01	0.60
				Total	0.44	13.06

BOLT LIST:-

BOLT \ STUD	BOLT DESCRIPTION	QTY	FINISH

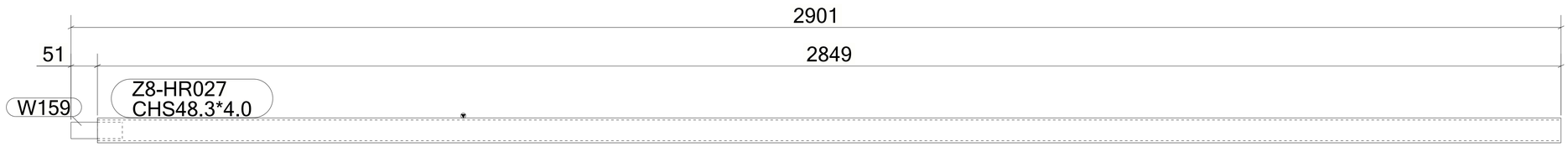

1 *REQUIRED AS DRAWN MARKED* **Z8-HR027**

6 October Monorail
Engineering Unit
Valid For Construction

GENERAL NOTES:

1. THE DIMENSIONS SHOWN ARE NOMINAL (IN MILLIMETERS), U.N.O.
2. WELD SIZESHALL BE AISC MINIMUM OF 6 mm UNLESS NOTED OTHERWISE.
3. ALL FIELD WELDS SHALL BE INSPECTED PER QUALITY ASSURANCE AND SPECIAL INSPECTIONS.

REFERENCE DRAWINGS

1	93M-BOA-NAT-LOT-04833
2	93M-BOA-NAT-LOT-09170
3	93M-BOA-NAT-LOT-01976
4	93M-BOA-NAT-LOT-20021
5	
6	
7	
8	
9	

6TH OF OCTOBER CITY RAIL TRANSIT MONORAIL

The Authority | Consultant: Hill International | Main Contractor: ORASCOM CONSTRUCTION, BOMBARDIER | Structural Designer: INNOVA TRANSPORTATION

KEY PLAN:

SCALE: AS SHOWN | SHOPDRAWING | DATE: 12/05/2023

REV	DATE	DSG.	CHK.	APP.	AMENDMENTS	STATUS
B	12/05/2023	M.KH	M.KH	DR.M.M	ISSUED FOR INFORMATION	IFI
A	11/20/2022	M.KH	M.KH	DR.M.M	ISSUED FOR INFORMATION	IFI

DRAWING TITLE
6TH OF OCTOBER MONORAIL
SERVICE WALKWAYS
ZONE (1008)
Z8-HR027

Project Code	Rubric	Initiator	Lot	Ref	Number	Revision
93M047	6ACC	60DE	P	DWG	0826	8 B

Tekla structures

approval is subject to approval of coordination package between multi-discipline

REVIEWED WITH COMMENT
MONORAILS PROJECT

MATERIAL LIST FOR ASSEMBLY MK'D **Z8-HR028**

Mark	Profile	GRADE	No.	Length	Area	Weight
Z8-HR028	CHS48.3*4.0	S235JR	1	5987	0.90	26.18
W159	ROD32	S235JR	1	100	0.01	0.60
				Total	0.91	26.78

BOLT LIST:-

BOLT \ STUD	BOLT DESCRIPTION	QTY	FINISH

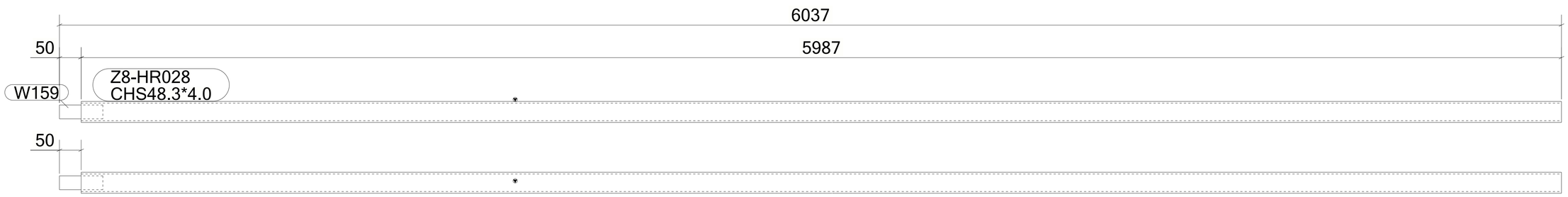

1 *REQUIRED AS DRAWN MARKED* **Z8-HR028**

6 October Monorail
Engineering Unit
Valid For Construction

GENERAL NOTES:

1. THE DIMENSIONS SHOWN ARE NOMINAL (IN MILLIMETERS), U.N.O.
2. WELD SIZESHALL BE AISC MINIMUM OF 6 mm UNLESS NOTED OTHERWISE.
3. ALL FIELD WELDS SHALL BE INSPECTED PER QUALITY ASSURANCE AND SPECIAL INSPECTIONS.

REFERENCE DRAWINGS

1	93M-BOA-NAT-LOT-04833
2	93M-BOA-NAT-LOT-09170
3	93M-BOA-NAT-LOT-01976
4	93M-BOA-NAT-LOT-20021
5	
6	
7	
8	
9	

6TH OF OCTOBER CITY RAIL TRANSIT MONORAIL

The Authority | Hill International Consultant | Main Contractor | Structural Designer

KEY PLAN:

SCALE	SHOPDRAWING	DATE
AS SHOWN		12/05/2023

REV	DATE	DSG.	CHK.	APP.	AMENDMENTS	STATUS
B	12/05/2023	M.KH	M.KH	DR.M.M	ISSUED FOR INFORMATION	IFI
A	11/20/2022	M.KH	M.KH	DR.M.M	ISSUED FOR INFORMATION	IFI

DRAWING TITLE
6TH OF OCTOBER MONORAIL
SERVICE WALKWAYS
ZONE (1008)
Z8-HR028

Project Code	Rubric	Initiator	Lot	Ref	Number	Revision
93M	047	6ACC	60DE	PDWG	08269	B

Tekla structures

approval is subject to approval of coordination package between multi-discipline

REVIEWED WITH COMMENT
MONORAILS PROJECT

MATERIAL LIST FOR ASSEMBLY MK'D **Z8-HR029**

Mark	Profile	GRADE	No.	Length	Area	Weight
Z8-HR029	CHS48.3*4.0	S235JR	1	4999	0.75	21.86
W159	ROD32	S235JR	1	100	0.01	0.60
				Total	0.76	22.46

BOLT LIST:-

BOLT \ STUD	BOLT DESCRIPTION	QTY	FINISH

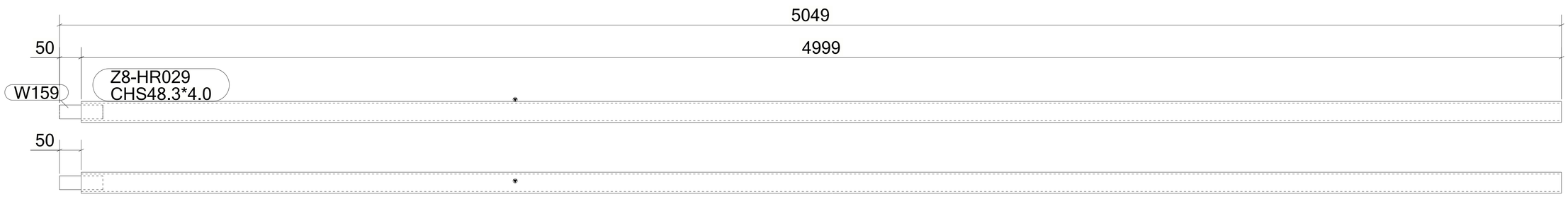

1 *REQUIRED AS DRAWN MARKED* **Z8-HR029**

6 October Monorail
Engineering Unit
Valid For Construction

GENERAL NOTES:

1. THE DIMENSIONS SHOWN ARE NOMINAL (IN MILLIMETERS), U.N.O.
2. WELD SIZESHALL BE AISC MINIMUM OF 6 mm UNLESS NOTED OTHERWISE.
3. ALL FIELD WELDS SHALL BE INSPECTED PER QUALITY ASSURANCE AND SPECIAL INSPECTIONS.

REFERENCE DRAWINGS

1	93M-BOA-NAT-LOT-04833
2	93M-BOA-NAT-LOT-09170
3	93M-BOA-NAT-LOT-01976
4	93M-BOA-NAT-LOT-20021
5	
6	
7	
8	
9	

6TH OF OCTOBER CITY RAIL TRANSIT MONORAIL

The Authority | Consultant: Hill International | Main Contractor: ORASCOM CONSTRUCTION, BOMBARDIER | Structural Designer: INNOVA TRANSPORTATION

KEY PLAN:

SCALE: AS SHOWN | SHOPDRAWING | DATE: 12/05/2023

REV	DATE	DSG.	CHK.	APP.	AMENDMENTS	STATUS
B	12/05/2023	M.KH	M.KH	DR.M.M	ISSUED FOR INFORMATION	IFI
A	11/20/2022	M.KH	M.KH	DR.M.M	ISSUED FOR INFORMATION	IFI

DRAWING TITLE
6TH OF OCTOBER MONORAIL
SERVICE WALKWAYS
ZONE (1008)
Z8-HR029

Project Code	Rubric	Initiator	Lot	Ref	Number	Revision
93M	476	ACC	60	DEP	DWG	08270	B

Tekla structures

approval is subject to approval of coordination package between multi-discipline

REVIEWED WITH COMMENT
MONORAILS PROJECT

MATERIAL LIST FOR ASSEMBLY MK'D **Z8-HR030**

Mark	Profile	GRADE	No.	Length	Area	Weight
Z8-HR030	CHS48.3*4.0	S235JR	1	3996	0.60	17.47
W159	ROD32	S235JR	1	100	0.01	0.60
				Total	0.61	18.08

BOLT LIST:-

BOLT \ STUD	BOLT DESCRIPTION	QTY	FINISH

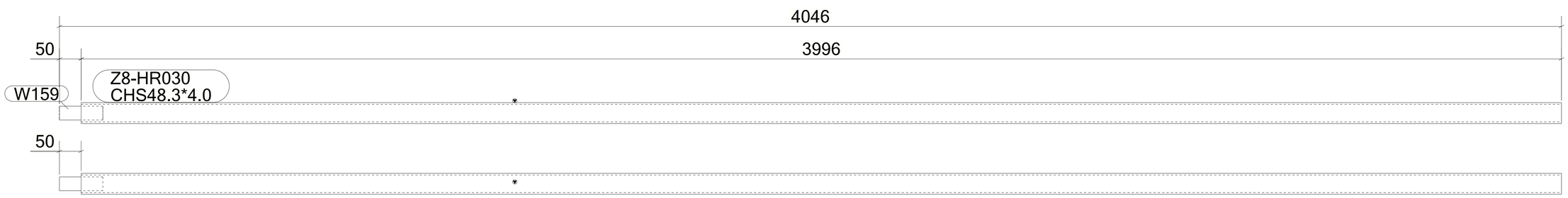

1 *REQUIRED AS DRAWN MARKED* **Z8-HR030**

6 October Monorail
Engineering Unit
Valid For Construction

GENERAL NOTES:

1. THE DIMENSIONS SHOWN ARE NOMINAL (IN MILLIMETERS), U.N.O.
2. WELD SIZESHALL BE AISC MINIMUM OF 6 mm UNLESS NOTED OTHERWISE.
3. ALL FIELD WELDS SHALL BE INSPECTED PER QUALITY ASSURANCE AND SPECIAL INSPECTIONS.

REFERENCE DRAWINGS

1	93M-BOA-NAT-LOT-04833
2	93M-BOA-NAT-LOT-09170
3	93M-BOA-NAT-LOT-01976
4	93M-BOA-NAT-LOT-20021
5	
6	
7	
8	
9	

6TH OF OCTOBER CITY RAIL TRANSIT MONORAIL

The Authority — Hill International Consultant — Main Contractor — Structural Designer

KEY PLAN:

SCALE	SHOPDRAWING	DATE
AS SHOWN		12/05/2023

REV	DATE	DSG.	CHK.	APP.	AMENDMENTS	STATUS
B	12/05/2023	M.KH	M.KH	DR.M.M	ISSUED FOR INFORMATION	IFI
A	11/20/2022	M.KH	M.KH	DR.M.M	ISSUED FOR INFORMATION	IFI

DRAWING TITLE
6TH OF OCTOBER MONORAIL
SERVICE WALKWAYS
ZONE (1008)
Z8-HR030

Project Code	Rubric	Initiator	Lot	Ref	Number	Revision
93M	047	6ACC	60DE	PDWG	0827	1 B

Tekla structures

approval is subject to approval of coordination package between multi-discipline

REVIEWED WITH COMMENT
MONORAILS PROJECT

MATERIAL LIST FOR ASSEMBLY MK'D **Z8-HR031**

Mark	Profile	GRADE	No.	Length	Area	Weight
Z8-HR031	CHS48.3*4.0	S235JR	1	5995	0.90	26.21
W159	ROD32	S235JR	1	100	0.01	0.60
				Total	0.91	26.82

BOLT LIST:-

BOLT \ STUD	BOLT DESCRIPTION	QTY	FINISH

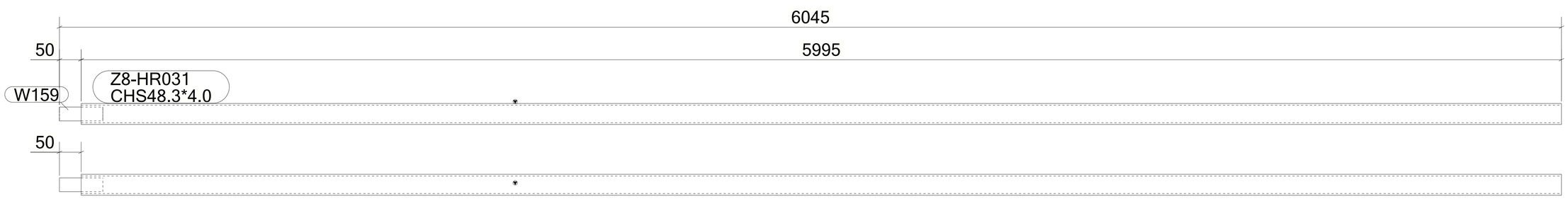

1 *REQUIRED AS DRAWN MARKED* **Z8-HR031**

6 October Monorail
Engineering Unit
Valid For Construction

GENERAL NOTES:

1. THE DIMENSIONS SHOWN ARE NOMINAL (IN MILLIMETERS), U.N.O.
2. WELD SIZESHALL BE AISC MINIMUM OF 6 mm UNLESS NOTED OTHERWISE.
3. ALL FIELD WELDS SHALL BE INSPECTED PER QUALITY ASSURANCE AND SPECIAL INSPECTIONS.

REFERENCE DRAWINGS

1	93M-BOA-NAT-LOT-04833
2	93M-BOA-NAT-LOT-09170
3	93M-BOA-NAT-LOT-01976
4	93M-BOA-NAT-LOT-20021
5	
6	
7	
8	
9	

6TH OF OCTOBER CITY RAIL TRANSIT MONORAIL

The Authority | Consultant: Hill International | Main Contractor: ORASCOM CONSTRUCTION, BOMBARDIER | Structural Designer: INNOVA TRANSPORTATION

KEY PLAN:

SCALE: AS SHOWN | SHOPDRAWING | DATE: 12/05/2023

REV	DATE	DSG.	CHK.	APP.	AMENDMENTS	STATUS
B	12/05/2023	M.KH	M.KH	DR.M.M	ISSUED FOR INFORMATION	IFI
A	11/20/2022	M.KH	M.KH	DR.M.M	ISSUED FOR INFORMATION	IFI

DRAWING TITLE
6TH OF OCTOBER MONORAIL
SERVICE WALKWAYS
ZONE (1008)
Z8-HR031

Project Code	Rubric	Initiator	Lot	Ref	Number	Revision
9 3 M	0 4 7 6	A C C	6 0 D E P	D W G	0 8 2 7 2	B

Tekla structures

approval is subject to approval of coordination package between multi-discipline

REVIEWED WITH COMMENT
MONORAILS PROJECT

MATERIAL LIST FOR ASSEMBLY MK'D **Z8-HR032**

Mark	Profile	GRADE	No.	Length	Area	Weight
Z8-HR032	CHS48.3*4.0	S235JR	1	2852	0.43	12.47
W159	ROD32	S235JR	1	100	0.01	0.60
				Total	0.44	13.07

BOLT LIST:-

BOLT \ STUD	BOLT DESCRIPTION	QTY	FINISH

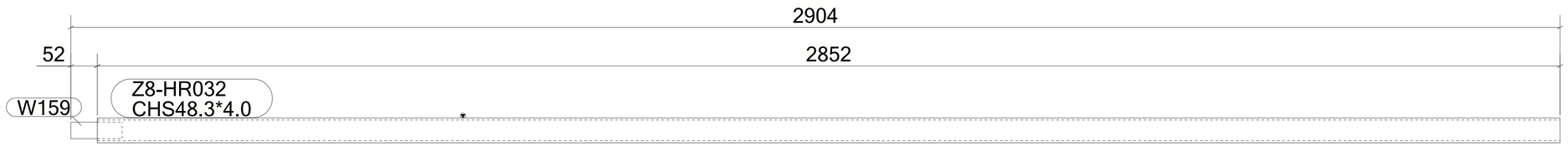

1 *REQUIRED AS DRAWN MARKED* **Z8-HR032**

6 October Monorail
Engineering Unit
Valid For Construction

GENERAL NOTES:

1. THE DIMENSIONS SHOWN ARE NOMINAL (IN MILLIMETERS), U.N.O.
2. WELD SIZESHALL BE AISC MINIMUM OF 6 mm UNLESS NOTED OTHERWISE.
3. ALL FIELD WELDS SHALL BE INSPECTED PER QUALITY ASSURANCE AND SPECIAL INSPECTIONS.

REFERENCE DRAWINGS

1	93M-BOA-NAT-LOT-04833
2	93M-BOA-NAT-LOT-09170
3	93M-BOA-NAT-LOT-01976
4	93M-BOA-NAT-LOT-20021
5	
6	
7	
8	
9	

6TH OF OCTOBER CITY RAIL TRANSIT MONORAIL

The Authority | Consultant: Hill International | Main Contractor: ORASCOM CONSTRUCTION, BOMBARDIER | Structural Designer: INNOVA TRANSPORTATION

KEY PLAN:

SCALE	SHOPDRAWING	DATE
AS SHOWN		12/05/2023

REV	DATE	DSG.	CHK.	APP.	AMENDMENTS	STATUS
B	12/05/2023	M.KH	M.KH	DR.M.M	ISSUED FOR INFORMATION	IFI
A	11/20/2022	M.KH	M.KH	DR.M.M	ISSUED FOR INFORMATION	IFI

DRAWING TITLE
6TH OF OCTOBER MONORAIL
SERVICE WALKWAYS
ZONE (1008)
Z8-HR032

Project Code	Rubric	Initiator	Lot	Ref	Number	Revision
9 3 M 0 4 7 6	A C C	6 0 D E P	D W G	0 8 2 7 3		B

Tekla structures

approval is subject to approval of coordination package between multi-discipline

REVIEWED WITH COMMENT
MONORAILS PROJECT

MATERIAL LIST FOR ASSEMBLY MK'D **Z8-HR033**

Mark	Profile	GRADE	No.	Length	Area	Weight
Z8-HR033	CHS48.3*4.0	S235JR	1	2995	0.45	13.09
W159	ROD32	S235JR	1	100	0.01	0.60
				Total	0.46	13.70

BOLT LIST:-

BOLT \ STUD	BOLT DESCRIPTION	QTY	FINISH

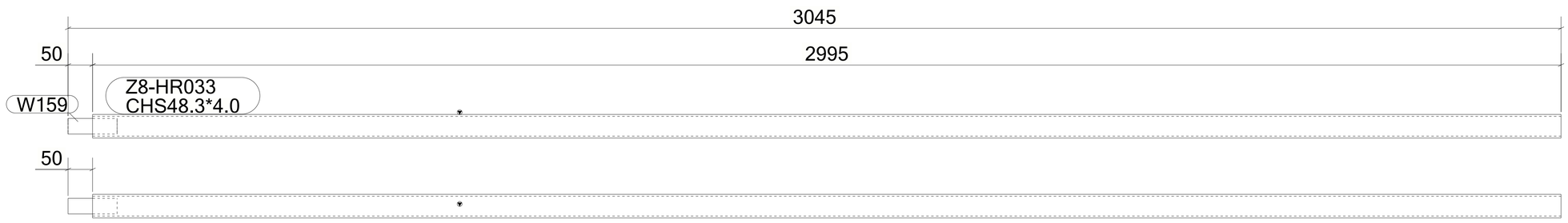

1 *REQUIRED AS DRAWN MARKED* **Z8-HR033**

6 October Monorail
Engineering Unit
Valid For Construction

GENERAL NOTES:

1. THE DIMENSIONS SHOWN ARE NOMINAL (IN MILLIMETERS), U.N.O.
2. WELD SIZESHALL BE AISC MINIMUM OF 6 mm UNLESS NOTED OTHERWISE.
3. ALL FIELD WELDS SHALL BE INSPECTED PER QUALITY ASSURANCE AND SPECIAL INSPECTIONS.

REFERENCE DRAWINGS

1	93M-BOA-NAT-LOT-04833
2	93M-BOA-NAT-LOT-09170
3	93M-BOA-NAT-LOT-01976
4	93M-BOA-NAT-LOT-20021
5	
6	
7	
8	
9	

6TH OF OCTOBER CITY RAIL TRANSIT MONORAIL

The Authority — Hill International Consultant — Main Contractor — Structural Designer

KEY PLAN:

SCALE: AS SHOWN | SHOPDRAWING | DATE: 12/05/2023

REV	DATE	DSG.	CHK.	APP.	AMENDMENTS	STATUS
B	12/05/2023	M.KH	M.KH	DR.M.M	ISSUED FOR INFORMATION	IFI
A	11/20/2022	M.KH	M.KH	DR.M.M	ISSUED FOR INFORMATION	IFI

DRAWING TITLE
6TH OF OCTOBER MONORAIL SERVICE WALKWAYS ZONE (1008)
Z8-HR033

Project Code	Rubric	Initiator	Lot	Ref	Number	Revision
93M	047	6ACC	60DE	PDWG	08274	B

Tekla structures

approval is subject to approval of coordination package between multi-discipline

REVIEWED WITH COMMENT
MONORAILS PROJECT

MATERIAL LIST FOR ASSEMBLY MK'D **Z8-HR034**

Mark	Profile	GRADE	No.	Length	Area	Weight
Z8-HR034	CHS48.3*4.0	S235JR	1	2999	0.45	13.11
				Total	0.45	13.11

BOLT LIST:-

BOLT \ STUD	BOLT DESCRIPTION	QTY	FINISH

1 *REQUIRED AS DRAWN MARKED* **Z8-HR034**

6 October Monorail
Engineering Unit
Valid For Construction

GENERAL NOTES:

1. THE DIMENSIONS SHOWN ARE NOMINAL (IN MILLIMETERS), U.N.O.
2. WELD SIZESHALL BE AISC MINIMUM OF 6 mm UNLESS NOTED OTHERWISE.
3. ALL FIELD WELDS SHALL BE INSPECTED PER QUALITY ASSURANCE AND SPECIAL INSPECTIONS.

REFERENCE DRAWINGS

1	93M-BOA-NAT-LOT-04833
2	93M-BOA-NAT-LOT-09170
3	93M-BOA-NAT-LOT-01976
4	93M-BOA-NAT-LOT-20021
5	
6	
7	
8	
9	

6TH OF OCTOBER CITY RAIL TRANSIT MONORAIL

The Authority | Hill International Consultant | Main Contractor | Structural Designer

KEY PLAN:

SCALE: AS SHOWN | SHOPDRAWING | DATE: 12/05/2023

REV	DATE	DSG.	CHK.	APP.	AMENDMENTS	STATUS
B	12/05/2023	M.KH	M.KH	DR.M.M	ISSUED FOR INFORMATION	IFI
A	11/20/2022	M.KH	M.KH	DR.M.M	ISSUED FOR INFORMATION	IFI

DRAWING TITLE
6TH OF OCTOBER MONORAIL
SERVICE WALKWAYS
ZONE (1008)
Z8-HR034

Project Code	Rubric	Initiator	Lot	Ref	Number	Revision
93M047	6ACC	60DEP	DWG	0827	5	B

Tekla structures

approval is subject to approval of coordination package between multi-discipline

REVIEWED WITH COMMENT
MONORAILS PROJECT

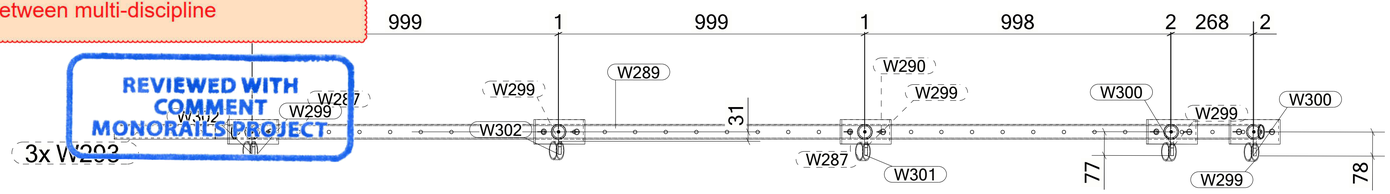

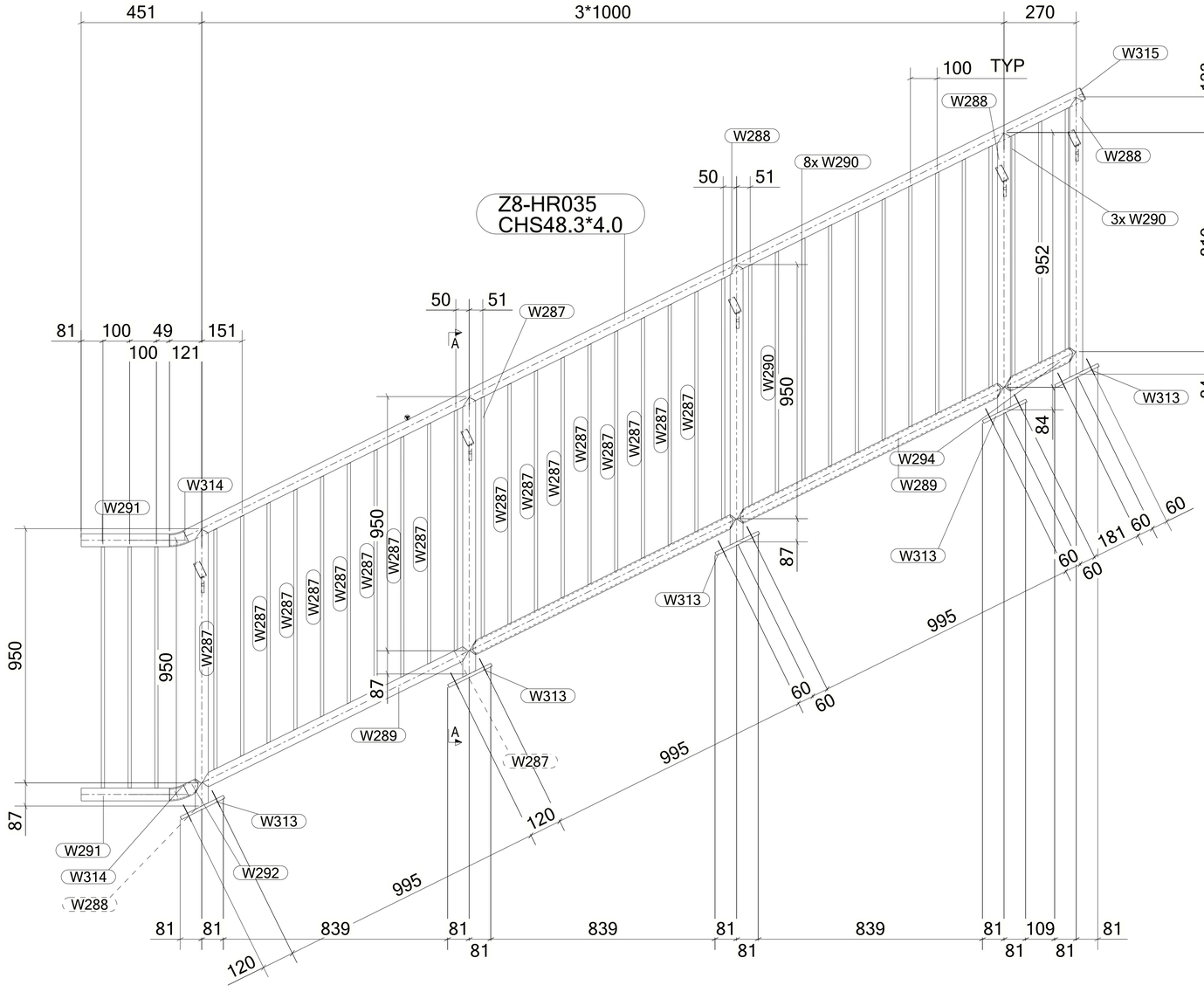
451
3*1000
270
100 TYP
W315
W288
W288
W288
3x W290
8x W290
50
51
Z8-HR035
CHS48.3*4.0
133
819
952
950
84
84
87
87
W313
W313
W313
W294
W289
W289
W287
W290
W287
W287
W287

approval is subject to approval of coordination package between multi-discipline

REVIEWED WITH COMMENT
MONORAILS PROJECT

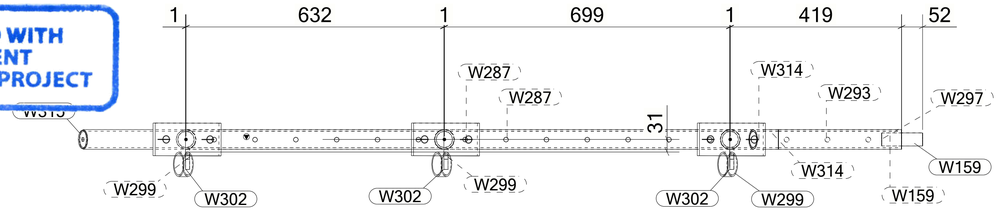

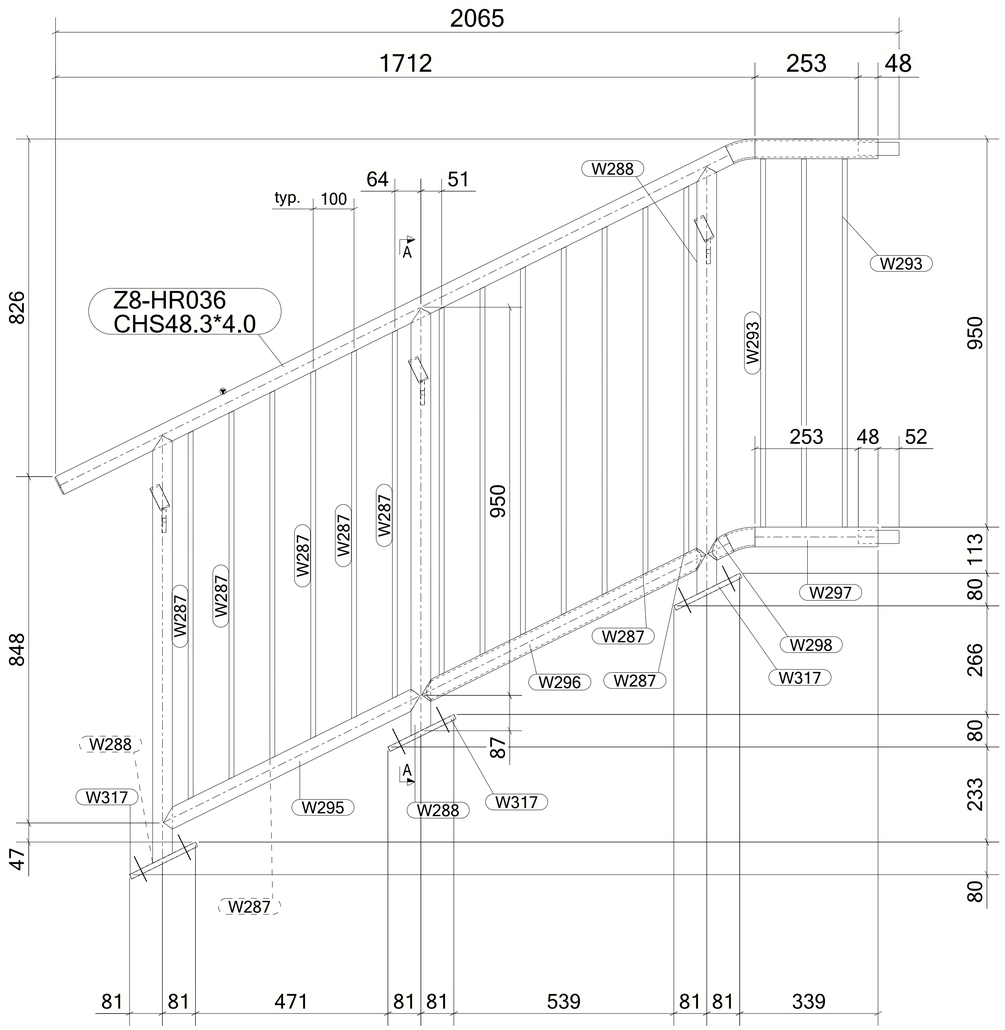

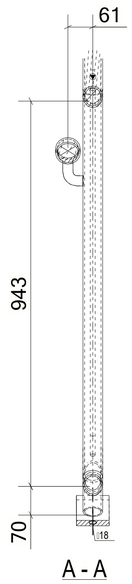

A - A

MATERIAL LIST FOR ASSEMBLY MK'D **Z8-HR036**

Mark	Profile	GRADE	No.	Length	Area	Weight
Z8-HR036	CHS48.3*4.0	S235JR	1	1829	0.27	8.00
W159	ROD32	S235JR	2	100	0.01	0.60
W287	ROD12	S355JR	13	902	0.03	0.72
W288	CHS48.3*4.0	S235JR	3	1047	0.16	4.58
W293	ROD12	S355JR	3	901	0.03	0.72
W295	CHS48.3*4.0	S235JR	1	701	0.11	3.07
W296	CHS48.3*4.0	S235JR	1	777	0.12	3.40
W297	CHS48.3*4.0	S235JR	2	301	0.05	1.32
W298	CHS48.3*4.0	S235JR	1	60	0.01	0.26
W299	PIPE2SCH40	S235JR	3	25	0.01	0.14
W302	PL10*25	S355JR	3	79	0.01	0.14
W314	CHS48.3*4.0	S235JR	2	64	0.01	0.28
W315	PL3*45	S355JR	1	45	0.00	0.03
W317	PL12*80	S355JR	3	180	0.04	1.36
				Total	1.78	49.26

BOLT LIST:-

BOLT \ STUD	BOLT DESCRIPTION		QTY	FINISH
BOLT	B1N2W 16 X 60	A325M	6	

1 *REQUIRED AS DRAWN MARKED* **Z8-HR036**

GENERAL NOTES:

1. THE DIMENSIONS SHOWN ARE NOMINAL (IN MILLIMETERS), U.N.O.
2. WELD SIZESHALL BE AISC MINIMUM OF 6 mm UNLESS NOTED OTHERWISE.
3. ALL FIELD WELDS SHALL BE INSPECTED PER QUALITY ASSURANCE AND SPECIAL INSPECTIONS.

REFERENCE DRAWINGS

1	93M-BOA-NAT-LOT-04833
2	93M-BOA-NAT-LOT-09170
3	93M-BOA-NAT-LOT-01976
4	93M-BOA-NAT-LOT-20021
5	
6	
7	
8	
9	

6TH OF OCTOBER CITY RAIL TRANSIT MONORAIL

The Authority | Consultant: Hill International | Main Contractor: ORASCOM CONSTRUCTION / BOMBARDIER | Structural Designer: INNOVA TRANSPORTATION

KEY PLAN:

6 October Monorail
Engineering Unit
Valid For Construction

SCALE	SHOPDRAWING	DATE
AS SHOWN		12/05/2023

REV	DATE	DSG.	CHK.	APP.	AMENDMENTS	STATUS
B	12/05/2023	M.KH	M.KH	DR.M.M	ISSUED FOR INFORMATION	IFI
A	11/20/2022	M.KH	M.KH	DR.M.M	ISSUED FOR INFORMATION	IFI

DRAWING TITLE
6TH OF OCTOBER MONORAIL
SERVICE WALKWAYS
ZONE (1008)
Z8-HR036

Project Code	Rubric	Initiator	Lot	Ref	Number	Revision
93M	047	6ACC	60DE	PDWG	0827	B

Tekla structures

approval is subject to approval of coordination package between multi-discipline

REVIEWED WITH COMMENT
MONORAILS PROJECT

MATERIAL LIST FOR ASSEMBLY MK'D **Z8-HR037**

Mark	Profile	GRADE	No.	Length	Area	Weight
Z8-HR037	CHS48.3*4.0	S235JR	1	1829	0.27	8.00
W159	ROD32	S235JR	1	100	0.01	0.60
W297	CHS48.3*4.0	S235JR	1	301	0.05	1.32
W314	CHS48.3*4.0	S235JR	1	64	0.01	0.28
W315	PL3*45	S355JR	1	45	0.00	0.03
				Total	0.34	10.23

BOLT LIST:-

BOLT \ STUD	BOLT DESCRIPTION	QTY	FINISH

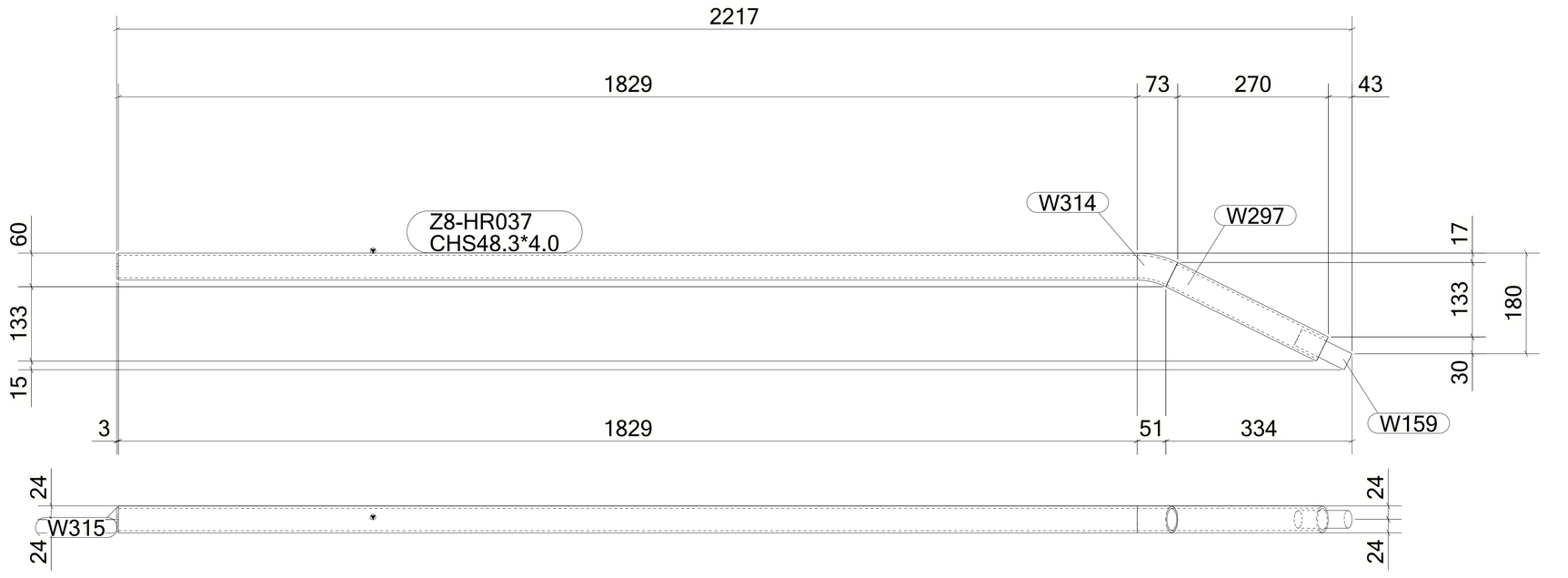

1 *REQUIRED AS DRAWN MARKED* **Z8-HR037**

6 October Monorail
Engineering Unit
Valid For Construction

GENERAL NOTES:

1. THE DIMENSIONS SHOWN ARE NOMINAL (IN MILLIMETERS), U.N.O.
2. WELD SIZESHALL BE AISC MINIMUM OF 6 mm UNLESS NOTED OTHERWISE.
3. ALL FIELD WELDS SHALL BE INSPECTED PER QUALITY ASSURANCE AND SPECIAL INSPECTIONS.

REFERENCE DRAWINGS

1	93M-BOA-NAT-LOT-04833
2	93M-BOA-NAT-LOT-09170
3	93M-BOA-NAT-LOT-01976
4	93M-BOA-NAT-LOT-20021
5	
6	
7	
8	
9	

6TH OF OCTOBER CITY RAIL TRANSIT MONORAIL

The Authority — Hill International Consultant — Main Contractor — Structural Designer

KEY PLAN:

SCALE: AS SHOWN | SHOPDRAWING | DATE: 12/05/2023

REV	DATE	DSG.	CHK.	APP.	AMENDMENTS	STATUS
B	12/05/2023	M.KH	M.KH	DR.M.M	ISSUED FOR INFORMATION	IFI
A	11/20/2022	M.KH	M.KH	DR.M.M	ISSUED FOR INFORMATION	IFI

DRAWING TITLE
6TH OF OCTOBER MONORAIL
SERVICE WALKWAYS
ZONE (1008)
Z8-HR037

Project Code	Rubric	Initiator	Lot	Ref	Number	Revision
93	M047	6ACC	60DEP	DWG	0827	B

Tekla structures

approval is subject to approval of coordination package between multi-discipline

REVIEWED WITH COMMENT
MONORAILS PROJECT

MATERIAL LIST FOR ASSEMBLY MK'D **Z8-HR038**

Mark	Profile	GRADE	No.	Length	Area	Weight
Z8-HR038	CHS48.3*4.0	S235JR	1	3790	0.57	16.57
W291	CHS48.3*4.0	S235JR	1	330	0.05	1.44
W303	CHS48.3*4.0	S235JR	1	297	0.04	1.30
W314	CHS48.3*4.0	S235JR	2	64	0.01	0.28
W315	PL3*45	S355JR	1	45	0.00	0.03
				Total	0.69	19.91

BOLT LIST:-

BOLT \ STUD	BOLT DESCRIPTION	QTY	FINISH

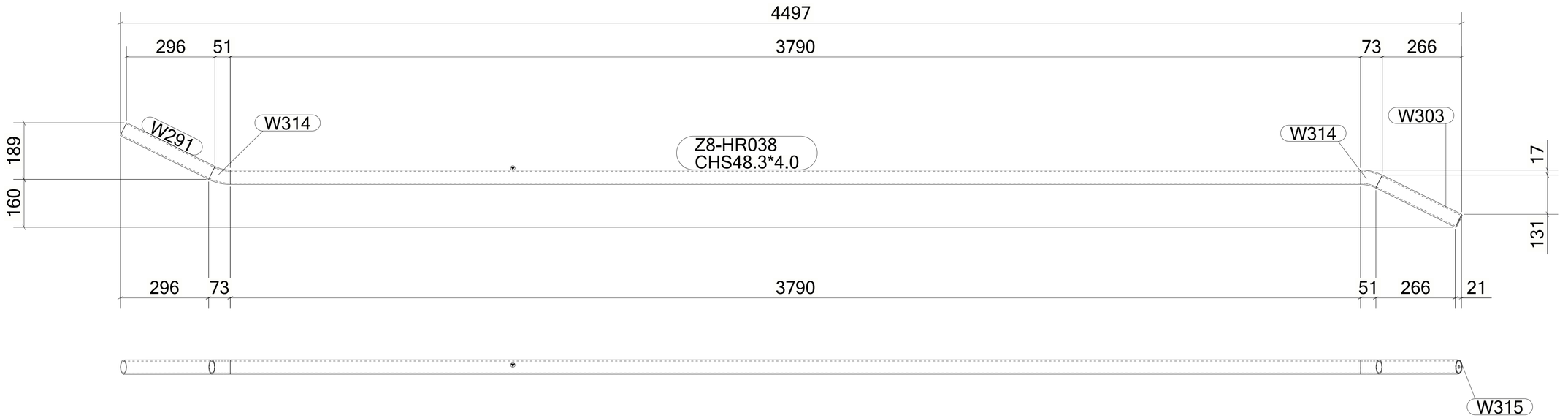

1 *REQUIRED AS DRAWN MARKED* **Z8-HR038**

6 October Monorail
Engineering Unit
Valid For Construction

GENERAL NOTES:

1. THE DIMENSIONS SHOWN ARE NOMINAL (IN MILLIMETERS), U.N.O.
2. WELD SIZESHALL BE AISC MINIMUM OF 6 mm UNLESS NOTED OTHERWISE.
3. ALL FIELD WELDS SHALL BE INSPECTED PER QUALITY ASSURANCE AND SPECIAL INSPECTIONS.

REFERENCE DRAWINGS

1	93M-BOA-NAT-LOT-04833
2	93M-BOA-NAT-LOT-09170
3	93M-BOA-NAT-LOT-01976
4	93M-BOA-NAT-LOT-20021
5	
6	
7	
8	
9	

6TH OF OCTOBER CITY RAIL TRANSIT MONORAIL

The Authority — Hill International (Consultant) — Main Contractor — Structural Designer

KEY PLAN:

SCALE: AS SHOWN | SHOPDRAWING | DATE: 12/05/2023

REV	DATE	DSG.	CHK.	APP.	AMENDMENTS	STATUS
B	12/05/2023	M.KH	M.KH	DR.M.M	ISSUED FOR INFORMATION	IFI
A	11/20/2022	M.KH	M.KH	DR.M.M	ISSUED FOR INFORMATION	IFI

DRAWING TITLE
6TH OF OCTOBER MONORAIL
SERVICE WALKWAYS
ZONE (1008)
Z8-HR038

Project Code	Rubric	Initiator	Lot	Ref	Number	Revision
93M	047	6ACC	60DE	PDWG	08279	B

Tekla structures

approval is subject to approval of coordination package between multi-discipline

REVIEWED WITH COMMENT
MONORAILS PROJECT

MATERIAL LIST FOR ASSEMBLY MK'D **Z8-HR039**

Mark	Profile	GRADE	No.	Length	Area	Weight
Z8-HR039	CHS48.3*4.0	S235JR	1	5756	0.86	25.17
W376	ROD32	S235JR	1	100	0.01	0.60
W491	CHS48.3*4.0	S235JR	1	75	0.01	0.33
				Total	0.89	26.10

BOLT LIST:-

BOLT \ STUD	BOLT DESCRIPTION	QTY	FINISH

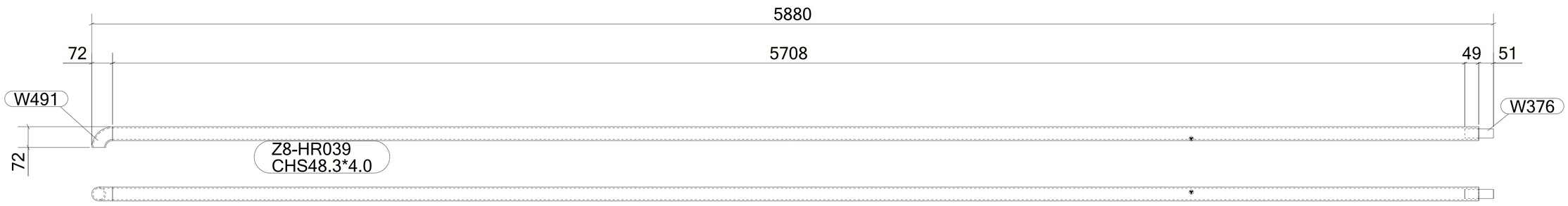

1 *REQUIRED AS DRAWN MARKED* **Z8-HR039**

6 October Monorail
Engineering Unit
Valid For Construction

GENERAL NOTES:

1. THE DIMENSIONS SHOWN ARE NOMINAL (IN MILLIMETERS), U.N.O.
2. WELD SIZESHALL BE AISC MINIMUM OF 6 mm UNLESS NOTED OTHERWISE.
3. ALL FIELD WELDS SHALL BE INSPECTED PER QUALITY ASSURANCE AND SPECIAL INSPECTIONS.

REFERENCE DRAWINGS

1	93M-BOA-NAT-LOT-04833
2	93M-BOA-NAT-LOT-09170
3	93M-BOA-NAT-LOT-01976
4	93M-BOA-NAT-LOT-20021
5	
6	
7	
8	
9	

6TH OF OCTOBER CITY RAIL TRANSIT MONORAIL

The Authority | Consultant: Hill International | Main Contractor: ORASCOM CONSTRUCTION, BOMBARDIER | Structural Designer: INNOVA TRANSPORTATION

KEY PLAN:

SCALE: AS SHOWN | SHOPDRAWING | DATE: 12/05/2023

REV	DATE	DSG.	CHK.	APP.	AMENDMENTS	STATUS
B	12/05/2023	M.KH	M.KH	DR.M.M	ISSUED FOR INFORMATION	IFI
A	11/20/2022	M.KH	M.KH	DR.M.M	ISSUED FOR INFORMATION	IFI

DRAWING TITLE
6TH OF OCTOBER MONORAIL
SERVICE WALKWAYS
ZONE (1008)
Z8-HR039

Project Code	Rubric	Initiator	Lot	Ref	Number	Revision
9 3 M	0 4 7 6	A C C	6 0 D E P	D W G	0 8 2 8 0	B

Tekla structures

approval is subject to approval of coordination package between multi-discipline

REVIEWED WITH COMMENT
MONORAILS PROJECT

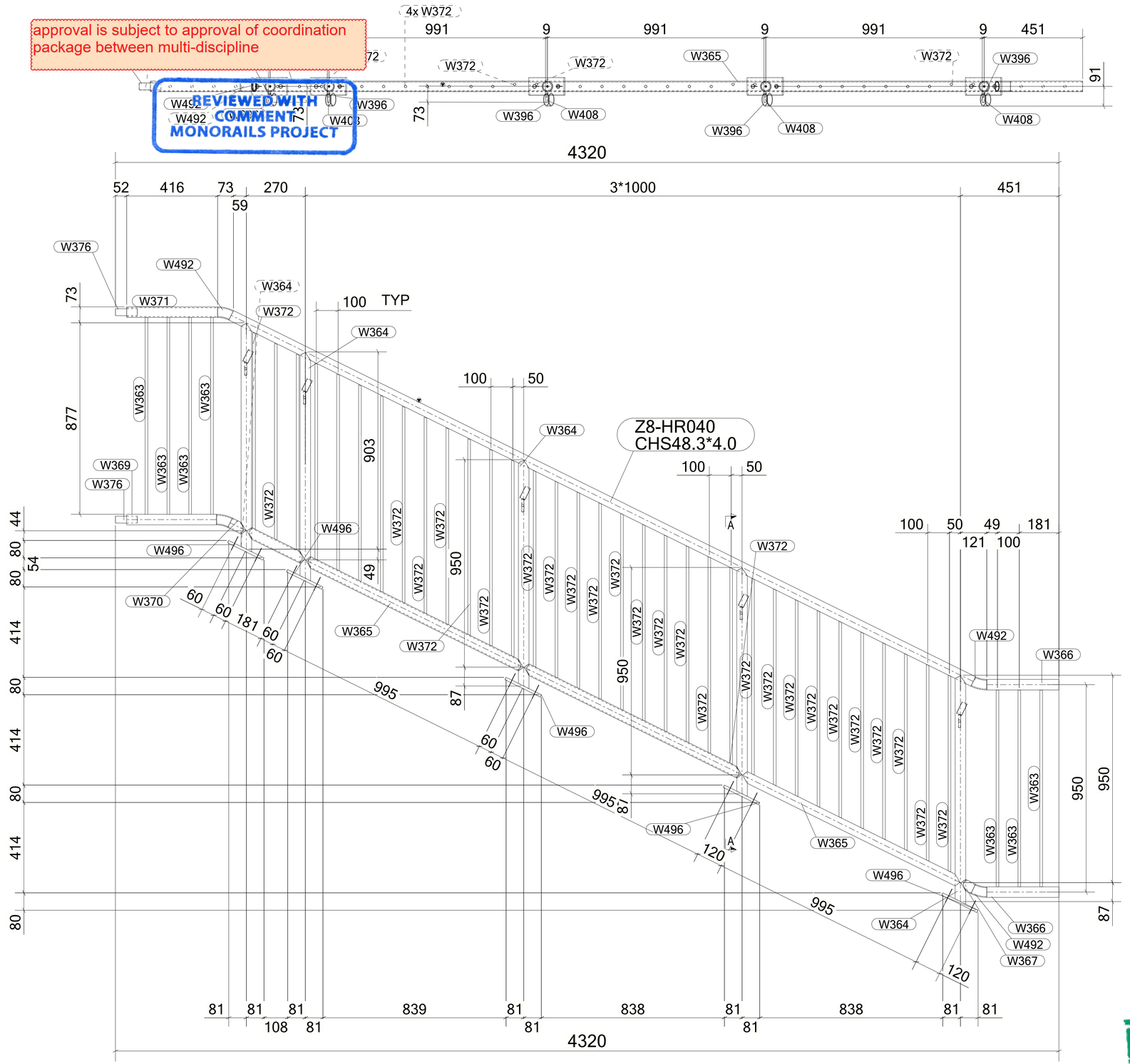

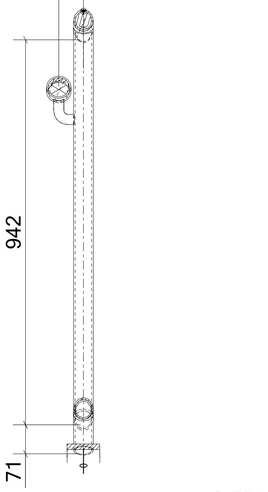

1 *REQUIRED AS DRAWN MARKED* **Z8-HR040**

MATERIAL LIST FOR ASSEMBLY MK'D **Z8-HR040**

Mark	Profile	GRADE	No.	Length	Area	Weight
Z8-HR040	CHS48.3*4.0	S235JR	1	3790	0.57	16.57
W363	ROD12	S355JR	7	902	0.03	0.72
W364	CHS48.3*4.0	S235JR	5	1047	0.16	4.58
W365	CHS48.3*4.0	S235JR	3	1111	0.17	4.86
W366	CHS48.3*4.0	S235JR	2	330	0.05	1.44
W367	CHS48.3*4.0	S235JR	1	63	0.01	0.28
W368	CHS48.3*4.0	S235JR	1	297	0.04	1.30
W369	CHS48.3*4.0	S235JR	1	412	0.06	1.80
W370	CHS48.3*4.0	S235JR	1	81	0.01	0.35
W371	CHS48.3*4.0	S235JR	1	416	0.06	1.82
W372	ROD12	S355JR	33	902	0.03	0.72
W376	ROD32	S235JR	2	100	0.01	0.60
W396	PIPE2SCH40	S235JR	5	25	0.01	0.14
W408	PL10*25	S355JR	5	78	0.01	0.14
W492	CHS48.3*4.0	S235JR	4	64	0.01	0.28
W496	PL12*80	S355JR	5	180	0.04	1.36
				Total	3.76	101.62

BOLT LIST:-

BOLT \ STUD	BOLT DESCRIPTION		QTY	FINISH
BOLT	B1N2W 16 X 60	A325M	10	

GENERAL NOTES:

1. THE DIMENSIONS SHOWN ARE NOMINAL (IN MILLIMETERS), U.N.O.
2. WELD SIZESHALL BE AISC MINIMUM OF 6 mm UNLESS NOTED OTHERWISE.
3. ALL FIELD WELDS SHALL BE INSPECTED PER QUALITY ASSURANCE AND SPECIAL INSPECTIONS.

REFERENCE DRAWINGS

1	93M-BOA-NAT-LOT-04833
2	93M-BOA-NAT-LOT-09170
3	93M-BOA-NAT-LOT-01976
4	93M-BOA-NAT-LOT-20021
5	
6	
7	
8	
9	

6TH OF OCTOBER CITY RAIL TRANSIT MONORAIL

The Authority — Hill International (Consultant) — Main Contractor — Structural Designer

KEY PLAN:

REV	DATE	DSG.	CHK.	APP.	AMENDMENTS	STATUS
B	12/05/2023	M.KH	M.KH	DR.M.M	ISSUED FOR INFORMATION	IFI
A	11/20/2022	M.KH	M.KH	DR.M.M	ISSUED FOR INFORMATION	IFI

SCALE: AS SHOWN | SHOPDRAWING | DATE: 12/05/2023

6 October Monorail
Engineering Unit
Valid For Construction

DRAWING TITLE
6TH OF OCTOBER MONORAIL
SERVICE WALKWAYS
ZONE (1008)
Z8-HR040

Project Code	Rubric	Initiator	Lot	Ref	Number	Revision
93	M047	6ACC	60DE	PDWG	0828	1 B

Tekla structures

approval is subject to approval of coordination package between multi-discipline

REVIEWED WITH COMMENT
MONORAILS PROJECT

MATERIAL LIST FOR ASSEMBLY MK'D **Z8-HR041**

Mark	Profile	GRADE	No.	Length	Area	Weight
Z8-HR041	CHS48.3*4.0	S235JR	1	3790	0.57	16.57
W366	CHS48.3*4.0	S235JR	1	330	0.05	1.44
W371	CHS48.3*4.0	S235JR	1	416	0.06	1.82
W376	ROD32	S235JR	1	100	0.01	0.60
W492	CHS48.3*4.0	S235JR	2	64	0.01	0.28
				Total	0.71	21.00

BOLT LIST:-

BOLT \ STUD	BOLT DESCRIPTION	QTY	FINISH

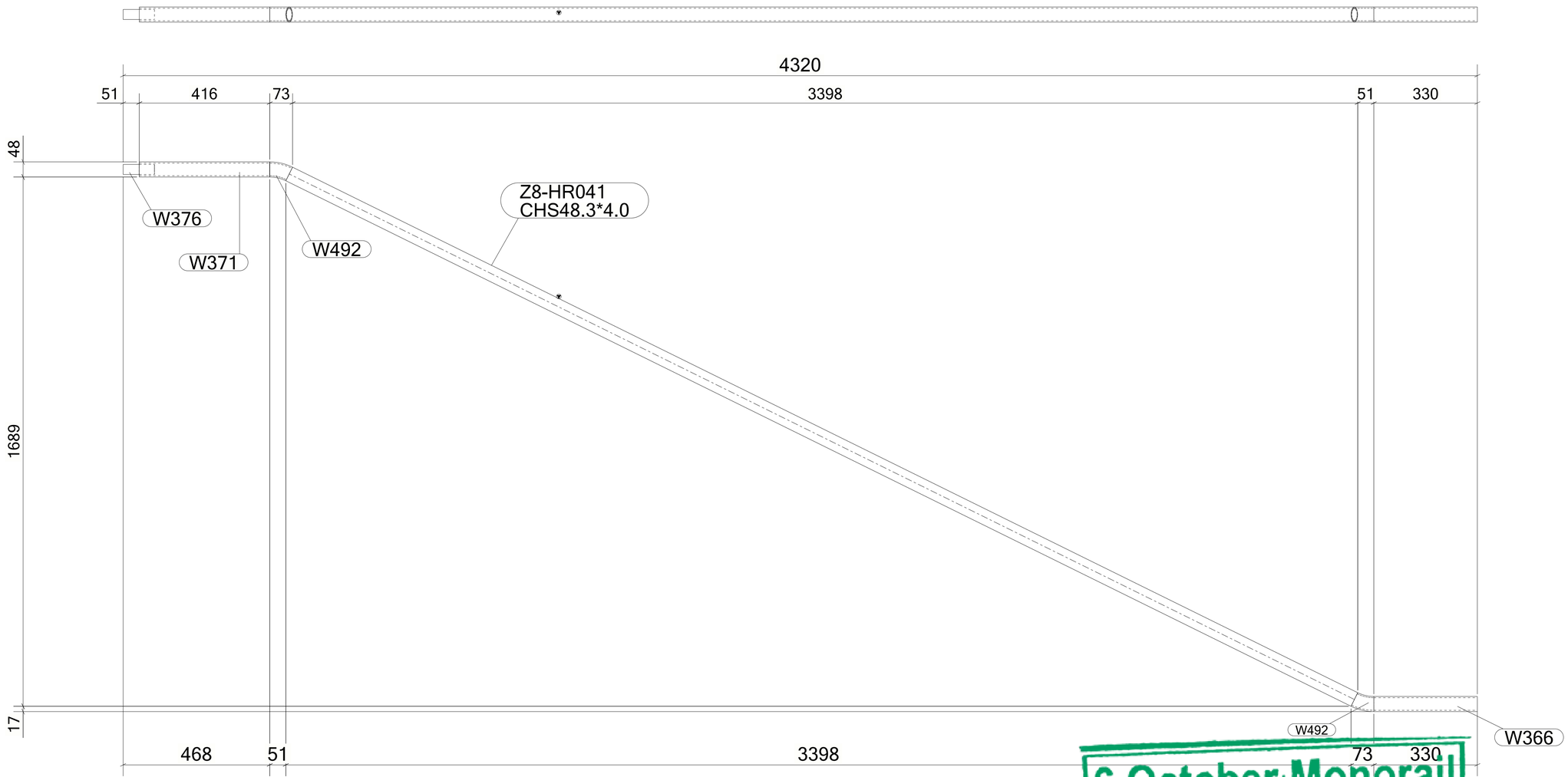

1 *REQUIRED AS DRAWN MARKED* **Z8-HR041**

6 October Monorail
Engineering Unit
Valid For Construction

GENERAL NOTES:

1. THE DIMENSIONS SHOWN ARE NOMINAL (IN MILLIMETERS), U.N.O.
2. WELD SIZESHALL BE AISC MINIMUM OF 6 mm UNLESS NOTED OTHERWISE.
3. ALL FIELD WELDS SHALL BE INSPECTED PER QUALITY ASSURANCE AND SPECIAL INSPECTIONS.

REFERENCE DRAWINGS

1	93M-BOA-NAT-LOT-04833
2	93M-BOA-NAT-LOT-09170
3	93M-BOA-NAT-LOT-01976
4	93M-BOA-NAT-LOT-20021
5	
6	
7	
8	
9	

6TH OF OCTOBER CITY RAIL TRANSIT MONORAIL

The Authority | Hill International Consultant | Main Contractor | Structural Designer

KEY PLAN:

SCALE	SHOPDRAWING	DATE
AS SHOWN		12/05/2023

REV	DATE	DSG.	CHK.	APP.	AMENDMENTS	STATUS
B	12/05/2023	MKH	MKH	DR.M.M	ISSUED FOR INFORMATION	IFI
A	11/20/2022	MKH	MKH	DR.M.M	ISSUED FOR INFORMATION	IFI

DRAWING TITLE
6TH OF OCTOBER MONORAIL
SERVICE WALKWAYS
ZONE (1008)
Z8-HR041

Project Code	Rubric	Initiator	Lot	Ref	Number	Revision
93	M047	6ACC	60DE	PDWG	0828	B

Tekla structures

approval is subject to approval of coordination package between multi-discipline

REVIEWED WITH COMMENT
MONORAILS PROJECT

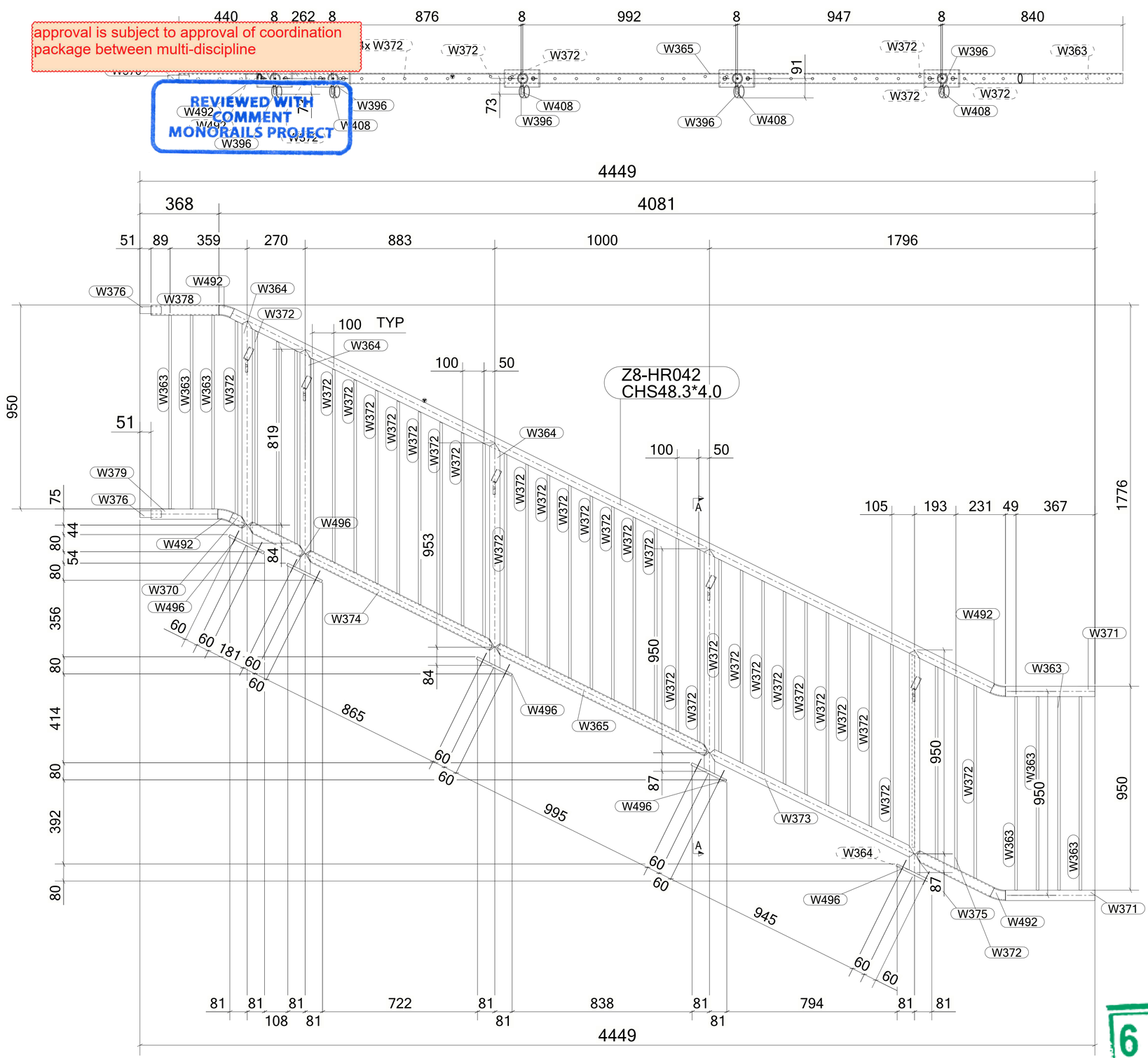

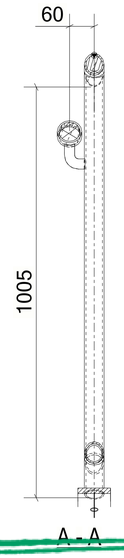

1 *REQUIRED AS DRAWN MARKED* **Z8-HR042**

MATERIAL LIST FOR ASSEMBLY MK'D **Z8-HR042**

Mark	Profile	GRADE	No.	Length	Area	Weight
Z8-HR042	CHS48.3*4.0	S235JR	1	3948	0.59	17.26
W363	ROD12	S355JR	7	902	0.03	0.72
W364	CHS48.3*4.0	S235JR	5	1047	0.16	4.58
W365	CHS48.3*4.0	S235JR	1	1111	0.17	4.86
W368	CHS48.3*4.0	S235JR	1	297	0.04	1.30
W370	CHS48.3*4.0	S235JR	1	81	0.01	0.35
W371	CHS48.3*4.0	S235JR	2	416	0.06	1.82
W372	ROD12	S355JR	36	902	0.03	0.72
W373	CHS48.3*4.0	S235JR	1	1061	0.16	4.64
W374	CHS48.3*4.0	S235JR	1	981	0.15	4.29
W375	CHS48.3*4.0	S235JR	1	401	0.06	1.76
W376	ROD32	S235JR	2	100	0.01	0.60
W378	CHS48.3*4.0	S235JR	1	317	0.05	1.38
W379	CHS48.3*4.0	S235JR	1	312	0.05	1.36
W396	PIPE2SCH40	S235JR	5	25	0.01	0.14
W408	PL10*25	S355JR	5	78	0.01	0.14
W492	CHS48.3*4.0	S235JR	4	64	0.01	0.28
W496	PL12*80	S355JR	5	180	0.04	1.36
				Total	3.90	105.05

BOLT LIST:-

BOLT \ STUD	BOLT DESCRIPTION	QTY	FINISH
BOLT	B1N2W 16 X 60 A325M	10	

6 October Monorail
Engineering Unit
Valid For Construction

GENERAL NOTES:

1. THE DIMENSIONS SHOWN ARE NOMINAL (IN MILLIMETERS), U.N.O.
2. WELD SIZESHALL BE AISC MINIMUM OF 6 mm UNLESS NOTED OTHERWISE.
3. ALL FIELD WELDS SHALL BE INSPECTED PER QUALITY ASSURANCE AND SPECIAL INSPECTIONS.

REFERENCE DRAWINGS

1	93M-BOA-NAT-LOT-04833
2	93M-BOA-NAT-LOT-09170
3	93M-BOA-NAT-LOT-01976
4	93M-BOA-NAT-LOT-20021
5	
6	
7	
8	
9	

6TH OF OCTOBER CITY RAIL TRANSIT MONORAIL

The Authority | Hill International Consultant | Main Contractor | Structural Designer

KEY PLAN:

SCALE	SHOPDRAWING	DATE
AS SHOWN		12/05/2023

REV	DATE	DSG.	CHK.	APP.	AMENDMENTS	STATUS
B	12/05/2023	M.KH	M.KH	DR.M.M	ISSUED FOR INFORMATION	IFI
A	11/20/2022	M.KH	M.KH	DR.M.M	ISSUED FOR INFORMATION	IFI

DRAWING TITLE
6TH OF OCTOBER MONORAIL
SERVICE WALKWAYS
ZONE (1008)
Z8-HR042

Project Code	Rubric	Initiator	Lot	Ref	Number	Revision
9 3 M	0 4 7 6	A C C	6 0 D E P	D W G	0 8 2 8 3	B

Tekla structures

approval is subject to approval of coordination package between multi-discipline

REVIEWED WITH COMMENT
MONORAILS PROJECT

MATERIAL LIST FOR ASSEMBLY MK'D **Z8-HR043**

Mark	Profile	GRADE	No.	Length	Area	Weight
Z8-HR043	CHS48.3*4.0	S235JR	1	3948	0.59	17.26
W371	CHS48.3*4.0	S235JR	1	416	0.06	1.82
W376	ROD32	S235JR	1	100	0.01	0.60
W378	CHS48.3*4.0	S235JR	1	317	0.05	1.38
W492	CHS48.3*4.0	S235JR	2	64	0.01	0.28
				Total	0.73	21.63

BOLT LIST:-

BOLT \ STUD	BOLT DESCRIPTION	QTY	FINISH

1 *REQUIRED AS DRAWN MARKED* **Z8-HR043**

6 October Monorail
Engineering Unit
Valid For Construction

GENERAL NOTES:

1. THE DIMENSIONS SHOWN ARE NOMINAL (IN MILLIMETERS), U.N.O.
2. WELD SIZESHALL BE AISC MINIMUM OF 6 mm UNLESS NOTED OTHERWISE.
3. ALL FIELD WELDS SHALL BE INSPECTED PER QUALITY ASSURANCE AND SPECIAL INSPECTIONS.

REFERENCE DRAWINGS

1	93M-BOA-NAT-LOT-04833
2	93M-BOA-NAT-LOT-09170
3	93M-BOA-NAT-LOT-01976
4	93M-BOA-NAT-LOT-20021
5	
6	
7	
8	
9	

6TH OF OCTOBER CITY RAIL TRANSIT MONORAIL

The Authority | Hill International Consultant | Main Contractor | Structural Designer

KEY PLAN:

SCALE: AS SHOWN | SHOPDRAWING | DATE: 12/05/2023

REV	DATE	DSG.	CHK.	APP.	AMENDMENTS	STATUS
B	12/05/2023	M.KH	M.KH	DR.M.M	ISSUED FOR INFORMATION	IFI
A	11/20/2022	M.KH	M.KH	DR.M.M	ISSUED FOR INFORMATION	IFI

DRAWING TITLE
6TH OF OCTOBER MONORAIL SERVICE WALKWAYS ZONE (1008)
Z8-HR043

Project Code	Rubric	Initiator	Lot	Ref	Number	Revision
93	M047	6ACC	60DE	PDWG	0828	4 B

Tekla structures

approval is subject to approval of coordination package between multi-discipline

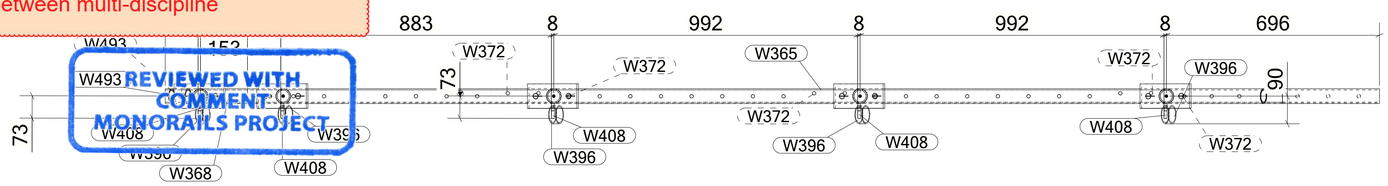

REVIEWED WITH COMMENT
MONORAILS PROJECT

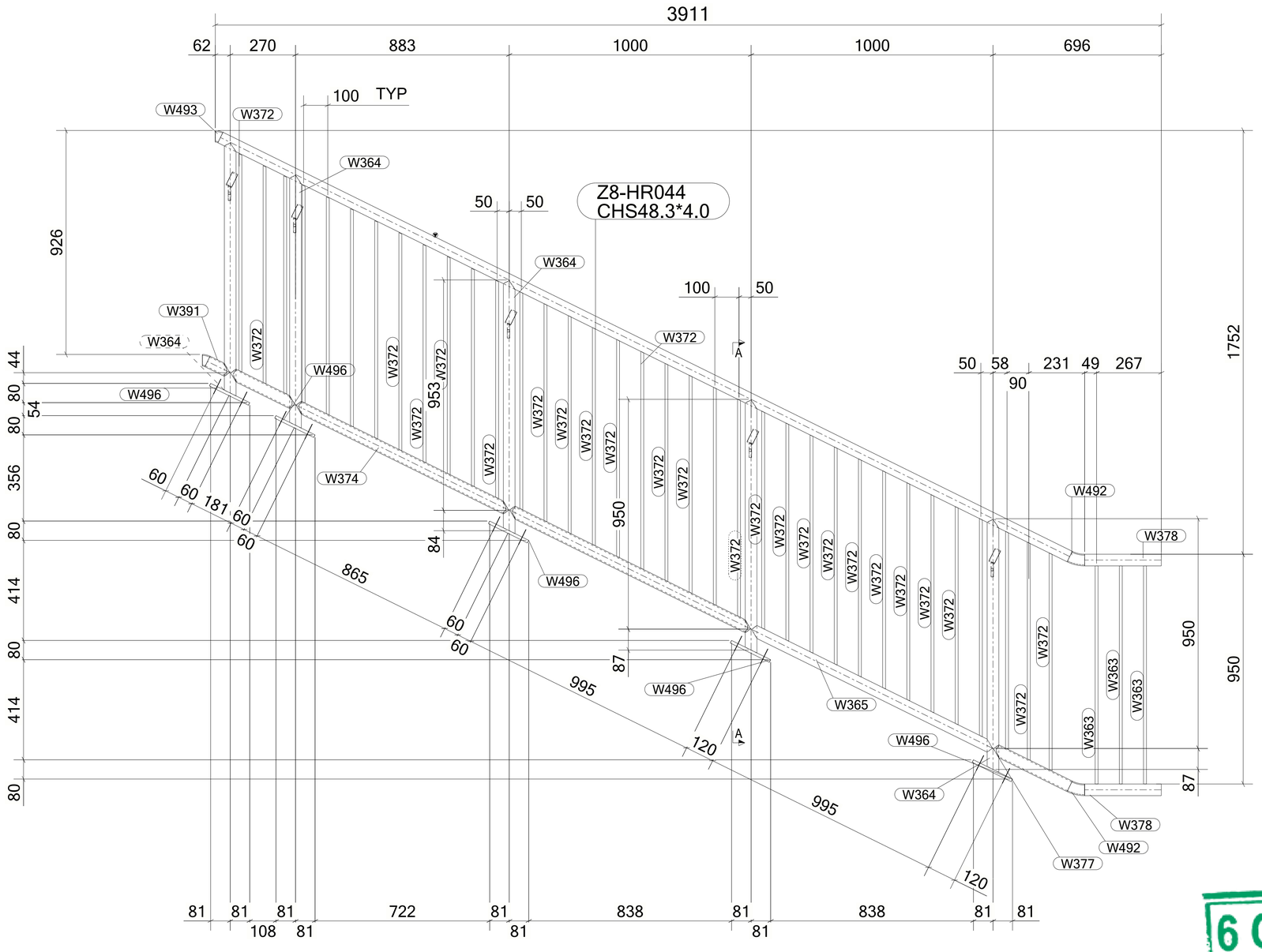

1 *REQUIRED AS DRAWN MARKED* **Z8-HR044**

MATERIAL LIST FOR ASSEMBLY MK'D **Z8-HR044**

Mark	Profile	GRADE	No.	Length	Area	Weight
Z8-HR044	CHS48.3*4.0	S235JR	1	3915	0.59	17.12
W363	ROD12	S355JR	3	902	0.03	0.72
W364	CHS48.3*4.0	S235JR	5	1046	0.16	4.58
W365	CHS48.3*4.0	S235JR	2	1111	0.17	4.86
W368	CHS48.3*4.0	S235JR	1	297	0.04	1.30
W372	ROD12	S355JR	35	902	0.03	0.72
W374	CHS48.3*4.0	S235JR	1	981	0.15	4.29
W377	CHS48.3*4.0	S235JR	1	351	0.05	1.54
W378	CHS48.3*4.0	S235JR	2	317	0.05	1.38
W391	CHS48.3*4.0	S235JR	1	103	0.02	0.45
W396	PIPE2SCH40	S235JR	5	25	0.01	0.14
W408	PL10*25	S355JR	5	78	0.01	0.14
W492	CHS48.3*4.0	S235JR	2	64	0.01	0.28
W493	CHS48.3*4.0	S235JR	2	22	0.00	0.10
W496	PL12*80	S355JR	5	180	0.04	1.36
				Total	3.58	96.21

BOLT LIST:-

BOLT \ STUD	BOLT DESCRIPTION		QTY	FINISH
BOLT	B1N2W16 X 60	A325M	10	

6 October Monorail
Engineering Unit
Valid For Construction

GENERAL NOTES:

1. THE DIMENSIONS SHOWN ARE NOMINAL (IN MILLIMETERS), U.N.O.
2. WELD SIZESHALL BE AISC MINIMUM OF 6 mm UNLESS NOTED OTHERWISE.
3. ALL FIELD WELDS SHALL BE INSPECTED PER QUALITY ASSURANCE AND SPECIAL INSPECTIONS.

REFERENCE DRAWINGS

1	93M-BOA-NAT-LOT-04833
2	93M-BOA-NAT-LOT-09170
3	93M-BOA-NAT-LOT-01976
4	93M-BOA-NAT-LOT-20021
5	
6	
7	
8	
9	

6TH OF OCTOBER CITY RAIL TRANSIT MONORAIL

The Authority — Hill International (Consultant) — Main Contractor — Structural Designer

KEY PLAN:

SCALE	SHOPDRAWING	DATE
AS SHOWN		12/05/2023

REV	DATE	DSG.	CHK.	APP.	AMENDMENTS	STATUS
B	12/05/2023	M.KH	M.KH	DR.M.M	ISSUED FOR INFORMATION	IFI
A	11/20/2022	M.KH	M.KH	DR.M.M	ISSUED FOR INFORMATION	IFI

DRAWING TITLE
6TH OF OCTOBER MONORAIL
SERVICE WALKWAYS
ZONE (1008)
Z8-HR044

Project Code	Rubric	Initiator	Lot	Ref	Number	Revision
93	M047	6ACC	60DE	PDWG	0828	5 B

Tekla structures

approval is subject to approval of coordination package between multi-discipline

REVIEWED WITH COMMENT
MONORAILS PROJECT

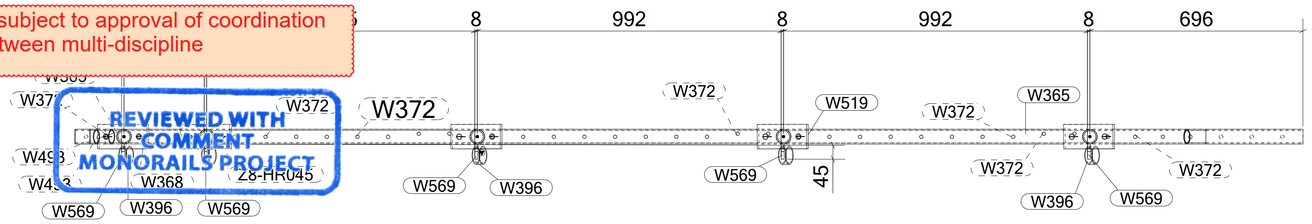

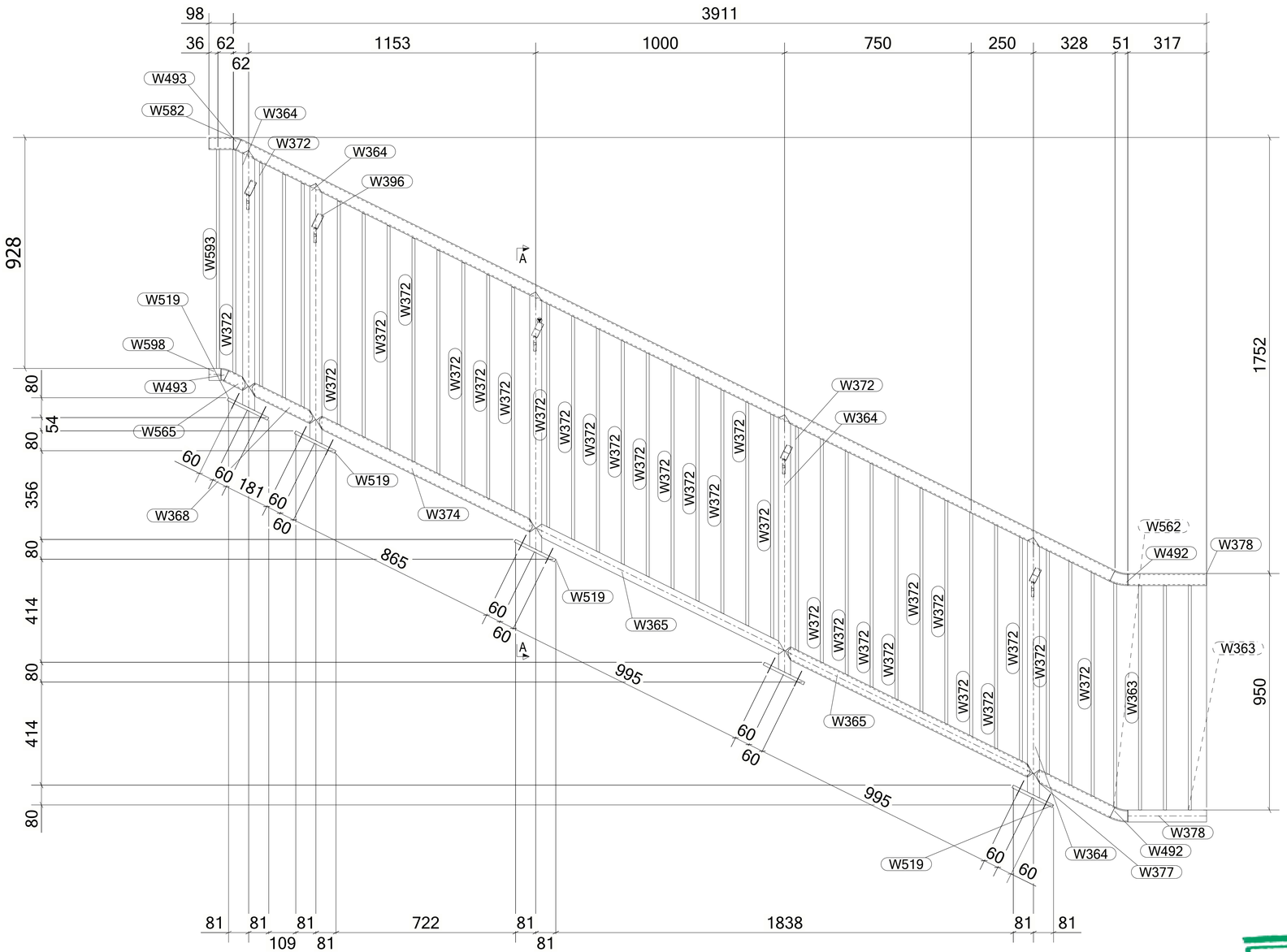

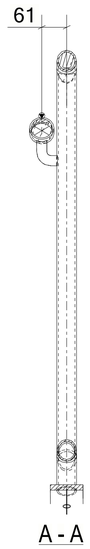

MATERIAL LIST FOR ASSEMBLY MK'D **Z8-HR045**

Mark	Profile	GRADE	No.	Length	Area	Weight
Z8-HR045	CHS48.3*4.0	S235JR	1	3915	0.59	17.12
W363	ROD12	S355JR	3	902	0.03	0.72
W364	CHS48.3*4.0	S235JR	5	1046	0.16	4.58
W365	CHS48.3*4.0	S235JR	2	1111	0.17	4.86
W368	CHS48.3*4.0	S235JR	1	297	0.04	1.30
W372	ROD12	S355JR	35	902	0.03	0.72
W374	CHS48.3*4.0	S235JR	1	981	0.15	4.29
W377	CHS48.3*4.0	S235JR	1	351	0.05	1.54
W378	CHS48.3*4.0	S235JR	2	317	0.05	1.38
W396	PIPE2SCH40	S235JR	5	25	0.01	0.14
W492	CHS48.3*4.0	S235JR	2	64	0.01	0.28
W493	CHS48.3*4.0	S235JR	2	22	0.00	0.10
W519	PL12*80	S355JR	5	180	0.04	1.36
W562	ROD12	S355JR	1	903	0.03	0.72
W565	CHS48.3*4.0	S235JR	1	98	0.01	0.43
W569	PL10*25	S355JR	5	79	0.01	0.14
W582	CHS48.3*4.0	S235JR	1	98	0.01	0.43
W593	ROD12	S355JR	1	880	0.03	0.70
W598	CHS48.3*4.0	S235JR	1	49	0.01	0.21
				Total	3.66	98.26

BOLT LIST:-

BOLT \ STUD	BOLT DESCRIPTION	QTY	FINISH
BOLT	B1N2W 16 X 60 A325M	10	

1 *REQUIRED AS DRAWN MARKED* **Z8-HR045**

GENERAL NOTES:

1. THE DIMENSIONS SHOWN ARE NOMINAL (IN MILLIMETERS), U.N.O.
2. WELD SIZESHALL BE AISC MINIMUM OF 6 mm UNLESS NOTED OTHERWISE.
3. ALL FIELD WELDS SHALL BE INSPECTED PER QUALITY ASSURANCE AND SPECIAL INSPECTIONS.

REFERENCE DRAWINGS

1	93M-BOA-NAT-LOT-04833
2	93M-BOA-NAT-LOT-09170
3	93M-BOA-NAT-LOT-01976
4	93M-BOA-NAT-LOT-20021
5	
6	
7	
8	
9	

6TH OF OCTOBER CITY RAIL TRANSIT MONORAIL

The Authority | Consultant: Hill International | Main Contractor: ORASCOM CONSTRUCTION / BOMBARDIER | Structural Designer: INNOVA TRANSPORTATION

KEY PLAN:

6 October Monorail
Engineering Unit
Valid For Construction

SCALE: AS SHOWN | SHOPDRAWING | DATE: 12/05/2023

REV	DATE	DSG.	CHK.	APP.	AMENDMENTS	STATUS
B	12/05/2023	M.KH	M.KH	DR.M.M	ISSUED FOR INFORMATION	IFI
A	11/20/2022	M.KH	M.KH	DR.M.M	ISSUED FOR INFORMATION	IFI

DRAWING TITLE
6TH OF OCTOBER MONORAIL
SERVICE WALKWAYS
ZONE (1008)
Z8-HR045

Project Code	Rubric	Initiator	Lot	Ref	Number	Revision
93M047	6ACC	60DEP	DWG	0828	6	B

Tekla structures

approval is subject to approval of coordination package between multi-discipline

REVIEWED WITH COMMENT
MONORAILS PROJECT

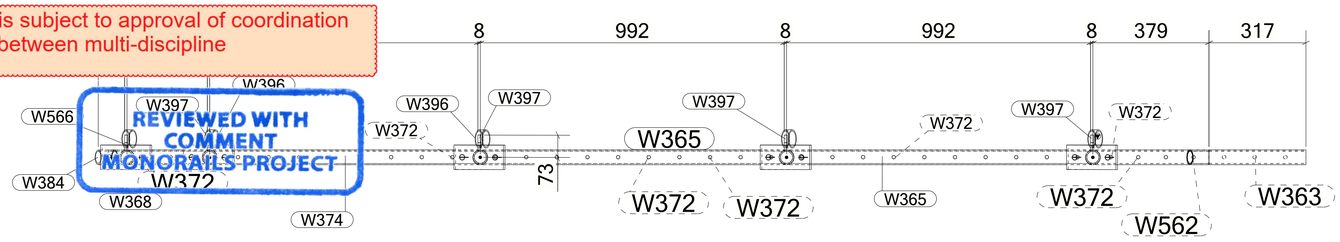

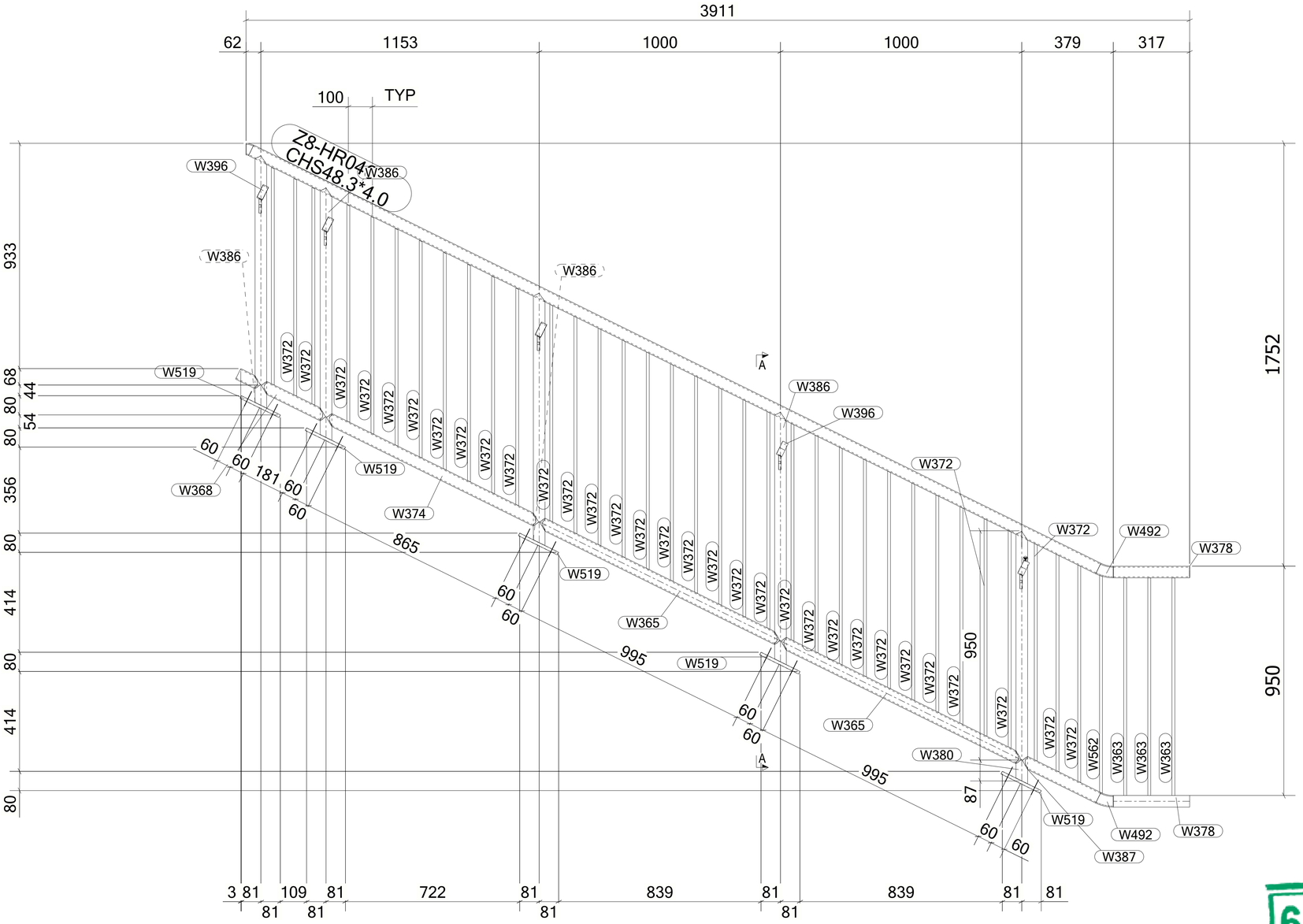
3911
62
1153
1000
1000
379
317
100
TYP
Z8-HR04
CHS48.3*4.0
W396
W386
W386
W386
933
1752
W519
W372
W372
W372

approval is subject to approval of coordination package between multi-discipline

REVIEWED WITH COMMENT
MONORAILS PROJECT

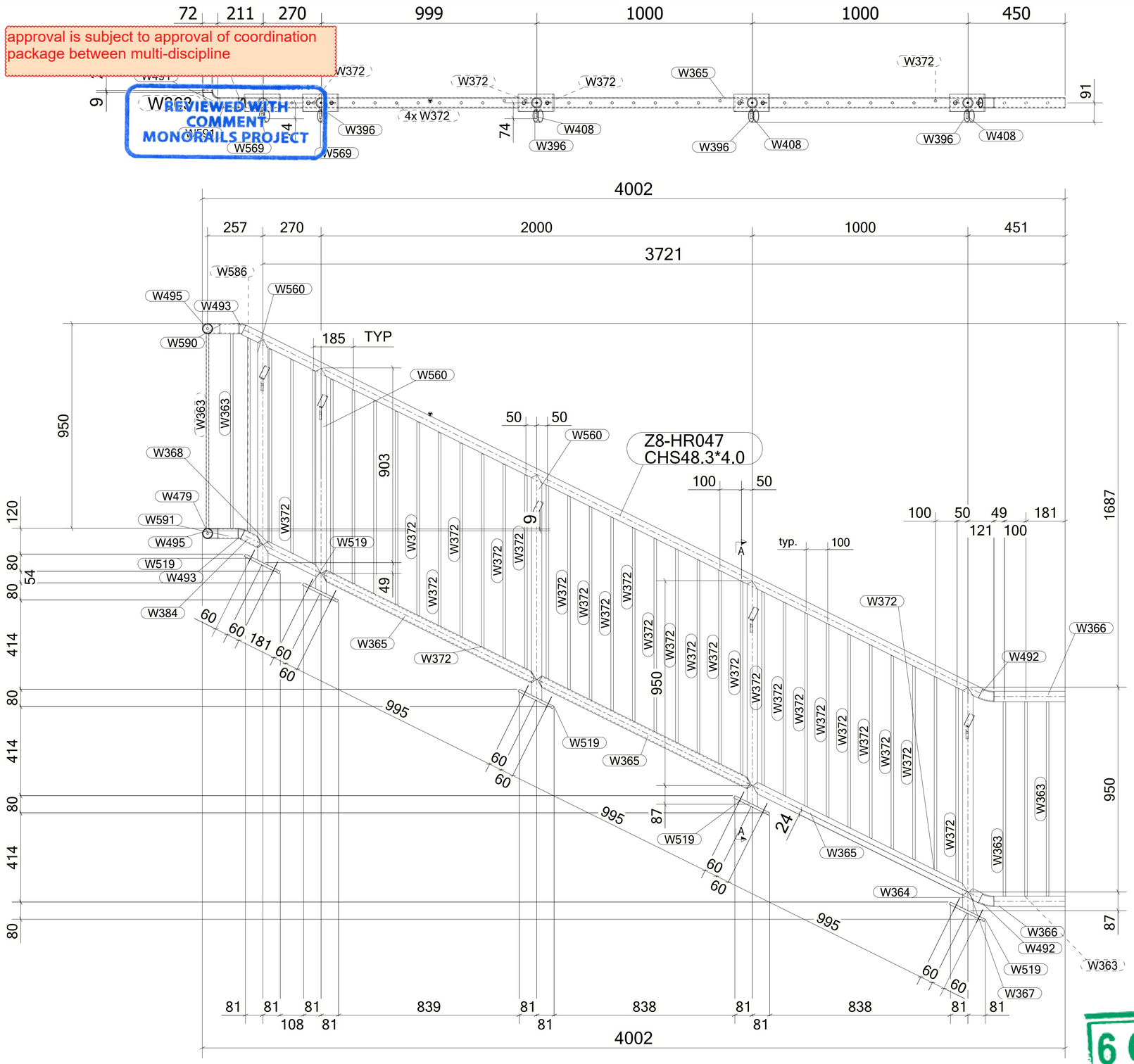

1 *REQUIRED AS DRAWN MARKED* **Z8-HR047**

MATERIAL LIST FOR ASSEMBLY MK'D **Z8-HR047**

Mark	Profile	GRADE	No.	Length	Area	Weight
Z8-HR047	CHS48.3*4.0	S235JR	1	3811	0.57	16.66
W363	ROD12	S355JR	7	902	0.03	0.72
W364	CHS48.3*4.0	S235JR	1	1047	0.16	4.58
W365	CHS48.3*4.0	S235JR	3	1111	0.17	4.86
W366	CHS48.3*4.0	S235JR	2	330	0.05	1.44
W367	CHS48.3*4.0	S235JR	1	63	0.01	0.28
W368	CHS48.3*4.0	S235JR	1	297	0.04	1.30
W372	ROD12	S355JR	33	902	0.03	0.72
W384	CHS48.3*4.0	S235JR	1	102	0.02	0.45
W396	PIPE2SCH40	S235JR	5	25	0.01	0.14
W408	PL10*25	S355JR	3	79	0.01	0.14
W479	CHS48.3*4.0	S235JR	1	249	0.04	1.09
W491	CHS48.3*4.0	S235JR	1	75	0.01	0.33
W492	CHS48.3*4.0	S235JR	2	64	0.01	0.28
W493	CHS48.3*4.0	S235JR	2	22	0.00	0.10
W495	PL3*45	S355JR	2	45	0.00	0.03
W519	PL12*80	S355JR	5	180	0.04	1.36
W560	CHS48.3*4.0	S235JR	4	1047	0.16	4.58
W569	PL10*25	S355JR	2	79	0.01	0.14
W583	CHS48.3*4.0	S235JR	1	240	0.04	1.05
W586	ROD12	S355JR	1	904	0.03	0.72
W590	CHS48.3*4.0	S235JR	1	89	0.01	0.39
W591	CHS48.3*4.0	S235JR	1	94	0.01	0.41
W614	CHS48.3*4.0	S235JR	1	90	0.01	0.39
				Total	3.77	101.07

BOLT LIST:-

BOLT \ STUD	BOLT DESCRIPTION		QTY	FINISH
BOLT	B1N2W 16 X 60	A325M	10	

GENERAL NOTES:

1. THE DIMENSIONS SHOWN ARE NOMINAL (IN MILLIMETERS), U.N.O.
2. WELD SIZESHALL BE AISC MINIMUM OF 6 mm UNLESS NOTED OTHERWISE.
3. ALL FIELD WELDS SHALL BE INSPECTED PER QUALITY ASSURANCE AND SPECIAL INSPECTIONS.

REFERENCE DRAWINGS

1	93M-BOA-NAT-LOT-04833
2	93M-BOA-NAT-LOT-09170
3	93M-BOA-NAT-LOT-01976
4	93M-BOA-NAT-LOT-20021
5	
6	
7	
8	
9	

6TH OF OCTOBER CITY RAIL TRANSIT MONORAIL

The Authority | Consultant: Hill International | Main Contractor: ORASCOM CONSTRUCTION / BOMBARDIER | Structural Designer: INNOVA TRANSPORTATION

KEY PLAN:

6 October Monorail
Engineering Unit
Valid For Construction

SCALE	SHOPDRAWING	DATE
AS SHOWN		12/05/2023

REV	DATE	DSG.	CHK.	APP.	AMENDMENTS	STATUS
B	12/05/2023	M.KH	M.KH	DR.M.M	ISSUED FOR INFORMATION	IFI
A	11/20/2022	M.KH	M.KH	DR.M.M	ISSUED FOR INFORMATION	IFI

DRAWING TITLE
6TH OF OCTOBER MONORAIL
SERVICE WALKWAYS
ZONE (1008)
Z8-HR047

Project Code	Rubric	Initiator	Lot	Ref	Number	Revision
93M	047	6ACC	60DE	PDWG	0828	B

Tekla structures

approval is subject to approval of coordination package between multi-discipline

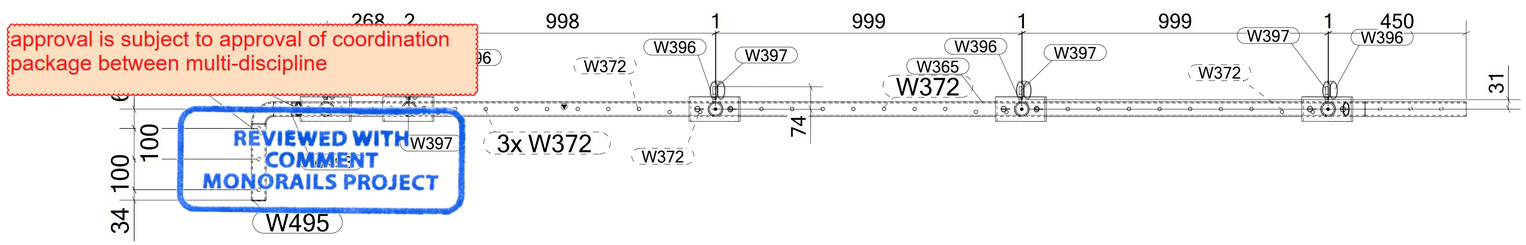

REVIEWED WITH COMMENT
MONORAILS PROJECT

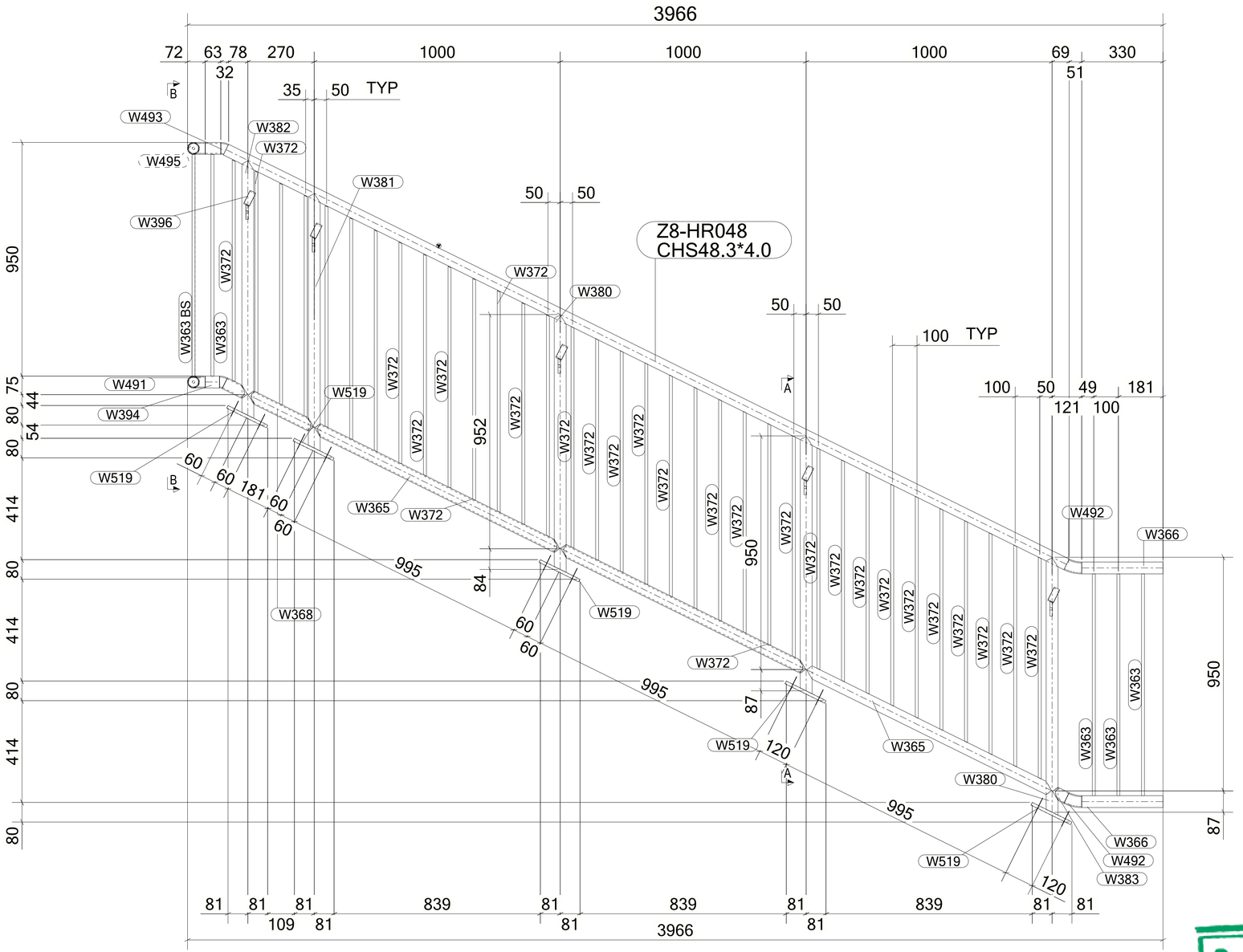
3966
72
63
78
270
1000
1000
1000
69
330
32
35
50 TYP
51
W493
W382
W372
W495
W381
W396
50
50
Z8-HR048
CHS48.3*4.0
W372
W380
50
50
100 TYP
950
W363 BS
W363
W372
W491
W519
W372
W372
A
100
50
49
181
121
100
75
44
80
54
80
414
W394
W519
B
60
60
181
60
60
W365
W372
W372
952
W372
W372
W372

approval is subject to approval of coordination package between multi-discipline

REVIEWED WITH COMMENT
MONORAILS PROJECT

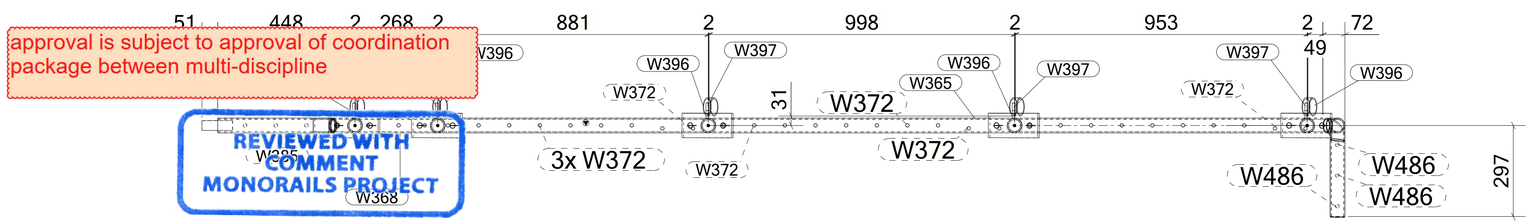

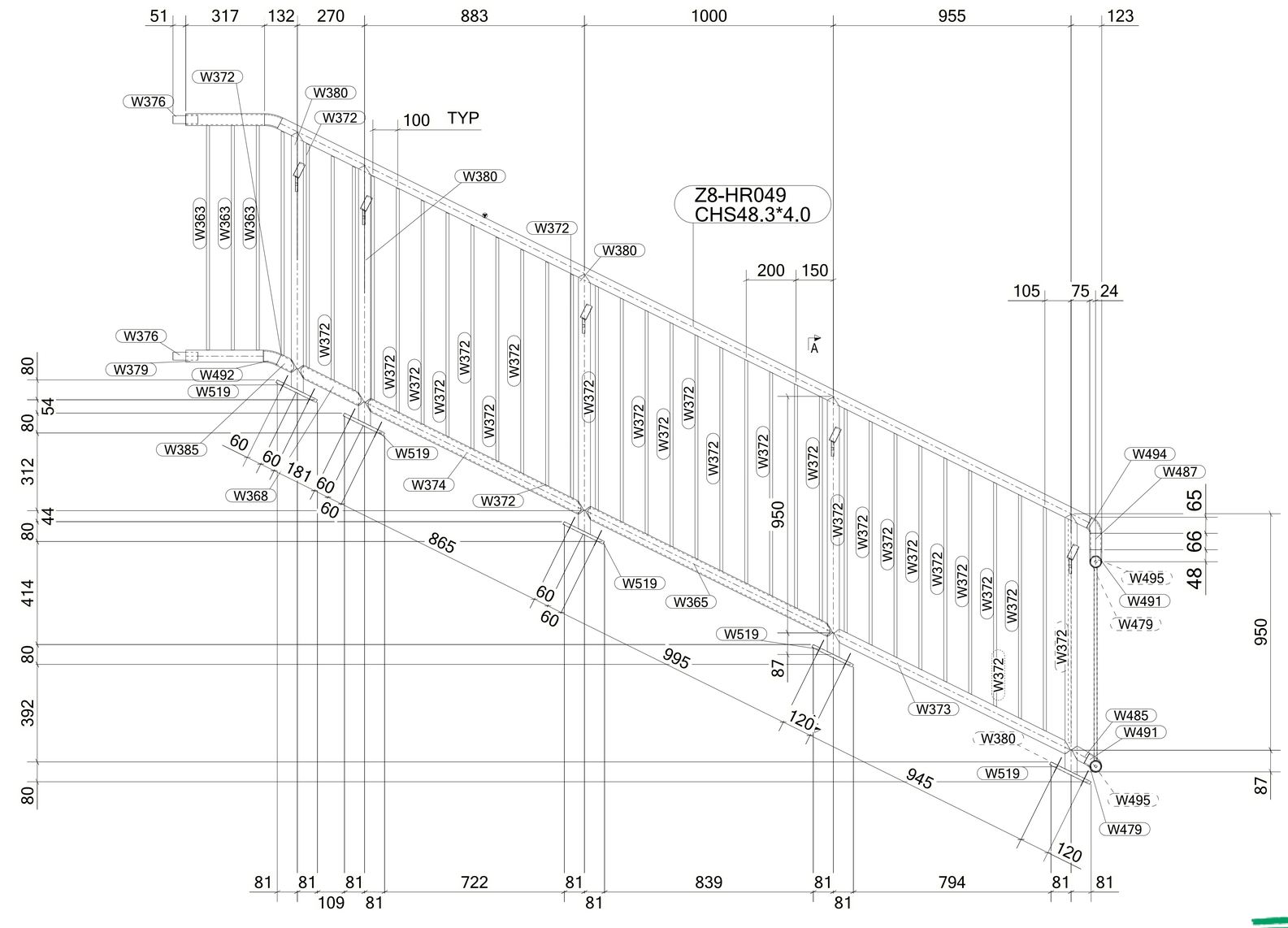

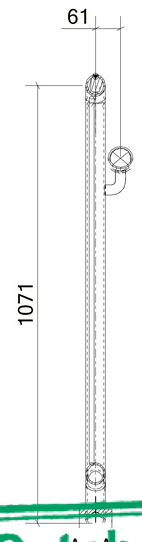

MATERIAL LIST FOR ASSEMBLY MK'D **Z8-HR049**

Mark	Profile	GRADE	No.	Length	Area	Weight
Z8-HR049	CHS48.3*4.0	S235JR	1	3625	0.54	15.85
W363	ROD12	S355JR	3	902	0.03	0.72
W365	CHS48.3*4.0	S235JR	1	1111	0.17	4.86
W368	CHS48.3*4.0	S235JR	1	297	0.04	1.30
W372	ROD12	S355JR	33	902	0.03	0.72
W373	CHS48.3*4.0	S235JR	1	1061	0.16	4.64
W374	CHS48.3*4.0	S235JR	1	981	0.15	4.29
W376	ROD32	S235JR	2	100	0.01	0.60
W378	CHS48.3*4.0	S235JR	1	317	0.05	1.38
W379	CHS48.3*4.0	S235JR	1	312	0.05	1.36
W380	CHS48.3*4.0	S235JR	5	1046	0.16	4.58
W385	CHS48.3*4.0	S235JR	1	81	0.01	0.35
W396	PIPE2SCH40	S235JR	5	25	0.01	0.14
W397	PL10*25	S355JR	5	79	0.01	0.14
W479	CHS48.3*4.0	S235JR	2	249	0.04	1.09
W485	CHS48.3*4.0	S235JR	1	70	0.01	0.31
W486	ROD12	S355JR	3	773	0.03	0.62
W487	CHS48.3*4.0	S235JR	1	66	0.01	0.29
W491	CHS48.3*4.0	S235JR	2	76	0.01	0.33
W492	CHS48.3*4.0	S235JR	2	64	0.01	0.28
W494	CHS48.3*4.0	S235JR	1	53	0.01	0.23
W495	PL3*45	S355JR	2	45	0.00	0.03
W519	PL12*80	S355JR	5	180	0.04	1.36
				Total	3.64	98.25

BOLT LIST:-

BOLT \ STUD	BOLT DESCRIPTION	QTY	FINISH
BOLT	B1N2W 16 X 60 A325M	10	

1 *REQUIRED AS DRAWN MARKED* **Z8-HR049**

6 October: Monorail
Engineering Unit
Valid For Construction

GENERAL NOTES:

1. THE DIMENSIONS SHOWN ARE NOMINAL (IN MILLIMETERS), U.N.O.
2. WELD SIZESHALL BE AISC MINIMUM OF 6 mm UNLESS NOTED OTHERWISE.
3. ALL FIELD WELDS SHALL BE INSPECTED PER QUALITY ASSURANCE AND SPECIAL INSPECTIONS.

REFERENCE DRAWINGS

1	93M-BOA-NAT-LOT-04833
2	93M-BOA-NAT-LOT-09170
3	93M-BOA-NAT-LOT-01976
4	93M-BOA-NAT-LOT-20021
5	
6	
7	
8	
9	

6TH OF OCTOBER CITY RAIL TRANSIT MONORAIL

The Authority — Hill International (Consultant) — Main Contractor — Structural Designer

KEY PLAN:

REV	DATE	DSG.	CHK.	APP.	AMENDMENTS	STATUS
B	12/05/2023	M.KH	M.KH	DR.M.M	ISSUED FOR INFORMATION	IFI
A	11/20/2022	M.KH	M.KH	DR.M.M	ISSUED FOR INFORMATION	IFI

SCALE: AS SHOWN | SHOPDRAWING | DATE: 12/05/2023

DRAWING TITLE
6TH OF OCTOBER MONORAIL
SERVICE WALKWAYS
ZONE (1008)
Z8-HR049

Project Code	Rubric	Initiator	Lot	Ref	Number	Revision
9 3 M	0 4 7 6	A C C	6 0 D E P	D W G	0 8 2 9 0	B

Tekla structures

approval is subject to approval of coordination package between multi-discipline

REVIEWED WITH COMMENT
MONORAILS PROJECT

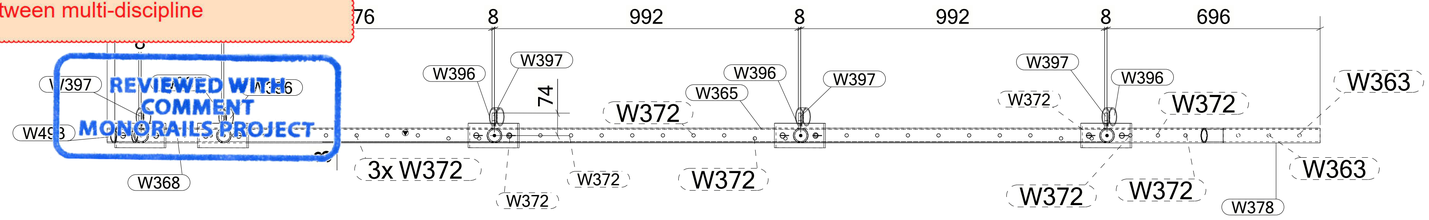

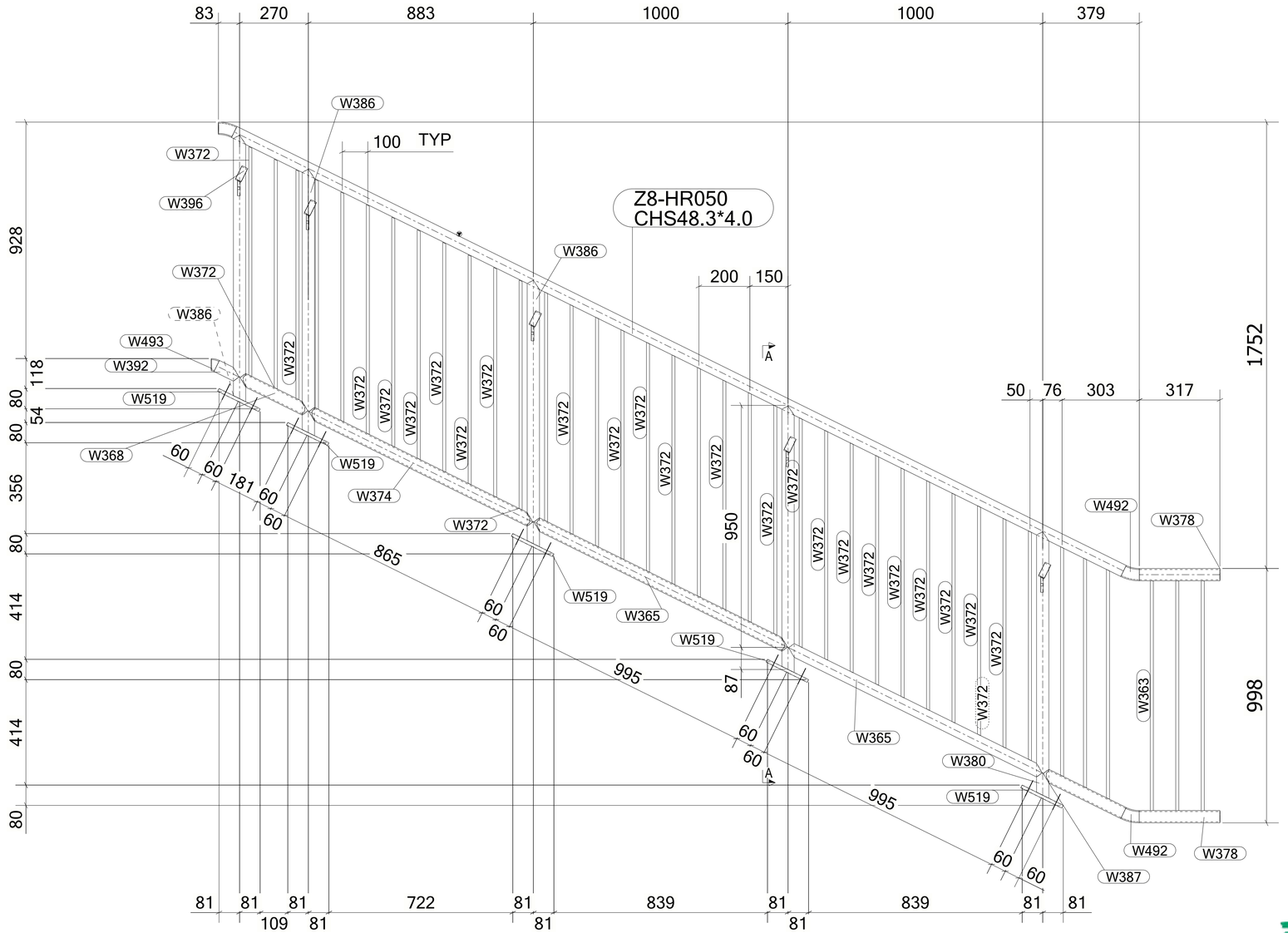

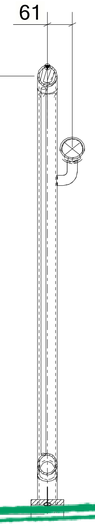

1 *REQUIRED AS DRAWN MARKED* **Z8-HR050**

MATERIAL LIST FOR ASSEMBLY MK'D **Z8-HR050**

Mark	Profile	GRADE	No.	Length	Area	Weight
Z8-HR050	CHS48.3*4.0	S235JR	1	3894	0.58	17.02
W363	ROD12	S355JR	3	902	0.03	0.72
W365	CHS48.3*4.0	S235JR	2	1111	0.17	4.86
W368	CHS48.3*4.0	S235JR	1	297	0.04	1.30
W372	ROD12	S355JR	35	902	0.03	0.72
W374	CHS48.3*4.0	S235JR	1	981	0.15	4.29
W378	CHS48.3*4.0	S235JR	2	317	0.05	1.38
W380	CHS48.3*4.0	S235JR	1	1047	0.16	4.58
W386	CHS48.3*4.0	S235JR	4	1047	0.16	4.58
W387	CHS48.3*4.0	S235JR	1	351	0.05	1.54
W392	CHS48.3*4.0	S235JR	1	98	0.01	0.43
W396	PIPE2SCH40	S235JR	5	25	0.01	0.14
W397	PL10*25	S355JR	5	79	0.01	0.14
W492	CHS48.3*4.0	S235JR	3	64	0.01	0.28
W493	CHS48.3*4.0	S235JR	1	22	0.00	0.10
W519	PL12*80	S355JR	5	180	0.04	1.36
				Total	3.58	96.28

BOLT LIST:-

BOLT \ STUD	BOLT DESCRIPTION		QTY	FINISH
BOLT	B1N2W 16 X 60	A325M	10	

6 October Monorail
Engineering Unit
Valid For Construction

GENERAL NOTES:

1. THE DIMENSIONS SHOWN ARE NOMINAL (IN MILLIMETERS), U.N.O.
2. WELD SIZESHALL BE AISC MINIMUM OF 6 mm UNLESS NOTED OTHERWISE.
3. ALL FIELD WELDS SHALL BE INSPECTED PER QUALITY ASSURANCE AND SPECIAL INSPECTIONS.

REFERENCE DRAWINGS

1	93M-BOA-NAT-LOT-04833
2	93M-BOA-NAT-LOT-09170
3	93M-BOA-NAT-LOT-01976
4	93M-BOA-NAT-LOT-20021
5	
6	
7	
8	
9	

6TH OF OCTOBER CITY RAIL TRANSIT MONORAIL

The Authority — Hill International Consultant — Main Contractor — Structural Designer

KEY PLAN:

SCALE: AS SHOWN | SHOPDRAWING | DATE: 12/05/2023

REV	DATE	DSG.	CHK.	APP.	AMENDMENTS	STATUS
B	12/05/2023	M.KH	M.KH	DR.M.M	ISSUED FOR INFORMATION	IFI
A	11/20/2022	M.KH	M.KH	DR.M.M	ISSUED FOR INFORMATION	IFI

DRAWING TITLE
6TH OF OCTOBER MONORAIL
SERVICE WALKWAYS
ZONE (1008)
Z8-HR050

Project Code	Rubric	Initiator	Lot	Ref	Number	Revision
93M	047	6ACC	60DE	PDWG	0829	1 B

Tekla structures

approval is subject to approval of coordination package between multi-discipline

REVIEWED WITH COMMENT
MONORAILS PROJECT

MATERIAL LIST FOR ASSEMBLY MK'D **Z8-HR051**

Mark	Profile	GRADE	No.	Length	Area	Weight
Z8-HR051	CHS48.3*4.0	S235JR	1	3894	0.58	17.02
W378	CHS48.3*4.0	S235JR	1	317	0.05	1.38
W404	CHS48.3*4.0	S235JR	1	149	0.02	0.65
W492	CHS48.3*4.0	S235JR	2	64	0.01	0.28
				Total	0.67	19.62

BOLT LIST:-

BOLT \ STUD	BOLT DESCRIPTION	QTY	FINISH

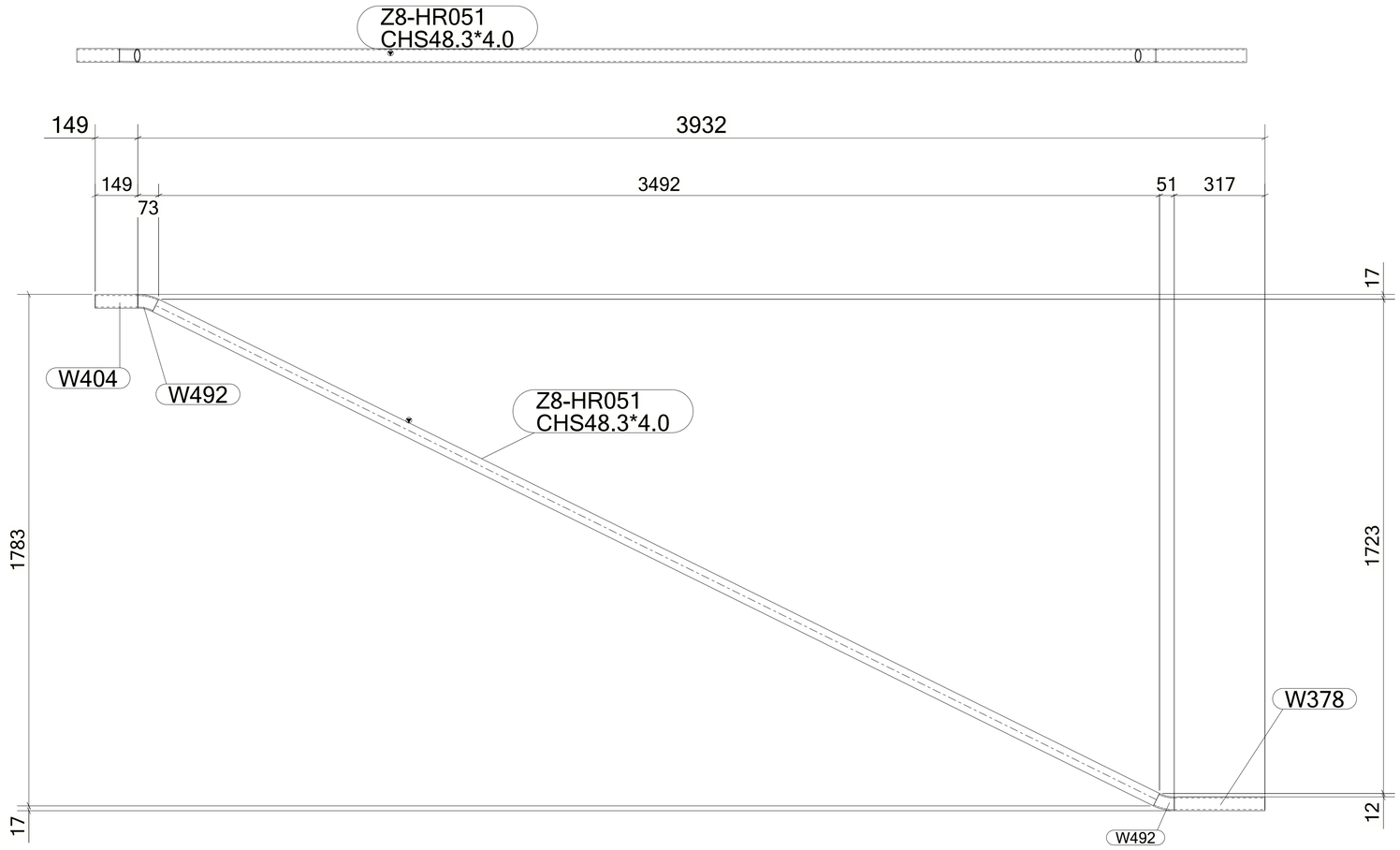

1 *REQUIRED AS DRAWN MARKED* **Z8-HR051**

6 October Monorail
Engineering Unit
Valid For Construction

GENERAL NOTES:

1. THE DIMENSIONS SHOWN ARE NOMINAL (IN MILLIMETERS), U.N.O.
2. WELD SIZESHALL BE AISC MINIMUM OF 6 mm UNLESS NOTED OTHERWISE.
3. ALL FIELD WELDS SHALL BE INSPECTED PER QUALITY ASSURANCE AND SPECIAL INSPECTIONS.

REFERENCE DRAWINGS

1	93M-BOA-NAT-LOT-04833
2	93M-BOA-NAT-LOT-09170
3	93M-BOA-NAT-LOT-01976
4	93M-BOA-NAT-LOT-20021
5	
6	
7	
8	
9	

6TH OF OCTOBER CITY RAIL TRANSIT MONORAIL

The Authority | Hill International Consultant | Main Contractor | Structural Designer

KEY PLAN:

SCALE: AS SHOWN | SHOPDRAWING | DATE: 12/05/2023

REV	DATE	DSG.	CHK.	APP.	AMENDMENTS	STATUS
B	12/05/2023	M.KH	M.KH	DR.M.M	ISSUED FOR INFORMATION	IFI
A	11/20/2022	M.KH	M.KH	DR.M.M	ISSUED FOR INFORMATION	IFI

DRAWING TITLE
6TH OF OCTOBER MONORAIL
SERVICE WALKWAYS
ZONE (1008)
Z8-HR051

Project Code	Rubric	Initiator	Lot	Ref	Number	Revision
93M	047	6ACC	60DE	PDWG	0829	B

Tekla structures

approval is subject to approval of coordination package between multi-discipline

REVIEWED WITH COMMENT
MONORAILS PROJECT

MATERIAL LIST FOR ASSEMBLY MK'D **Z8-HR052**

Mark	Profile	GRADE	No.	Length	Area	Weight
Z8-HR052	CHS48.3*4.0	S235JR	1	3894	0.58	17.02
W378	CHS48.3*4.0	S235JR	1	317	0.05	1.38
W409	CHS48.3*4.0	S235JR	1	1098	0.16	4.80
W492	CHS48.3*4.0	S235JR	2	64	0.01	0.28
				Total	0.82	23.77

BOLT LIST:-

BOLT \ STUD	BOLT DESCRIPTION	QTY	FINISH

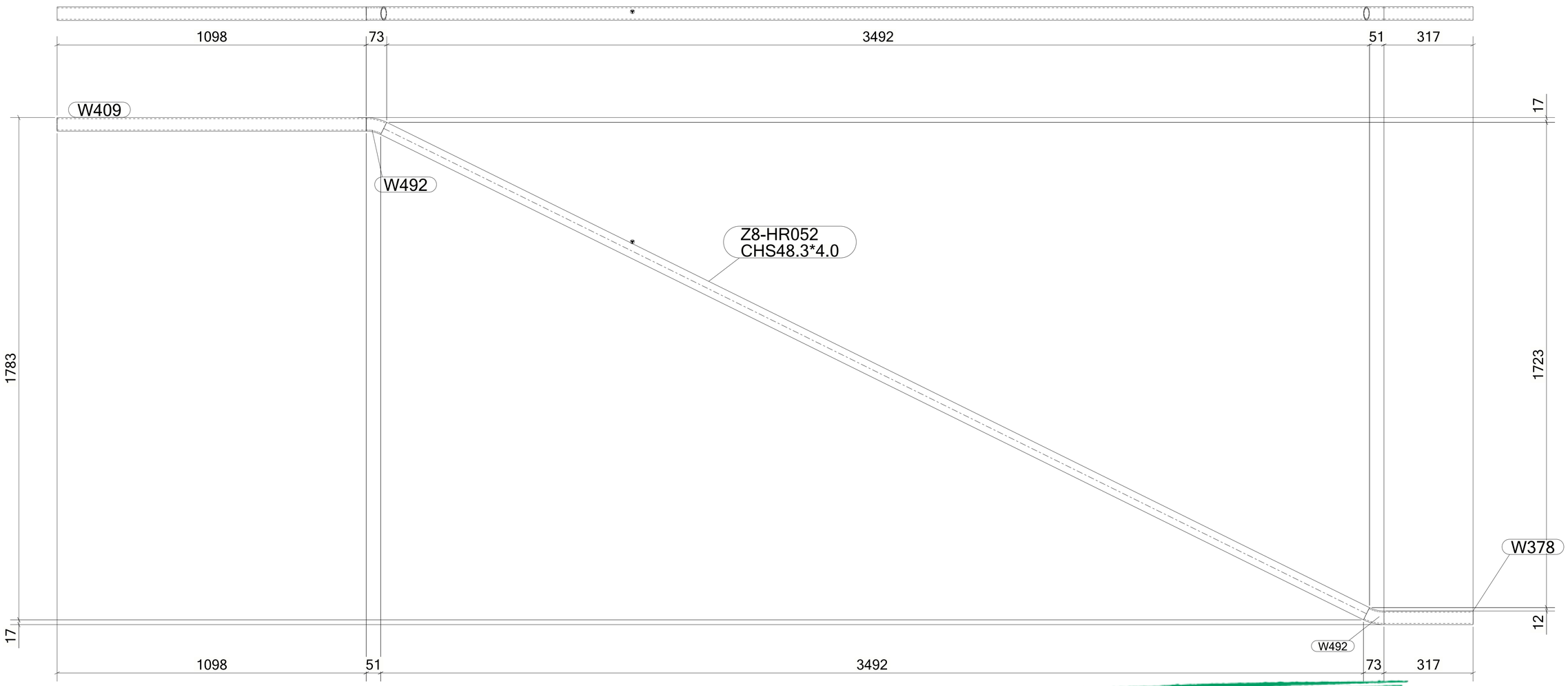

1 *REQUIRED AS DRAWN MARKED* **Z8-HR052**

6 October Monorail
Engineering Unit
Valid For Construction

GENERAL NOTES:

1. THE DIMENSIONS SHOWN ARE NOMINAL (IN MILLIMETERS), U.N.O.
2. WELD SIZESHALL BE AISC MINIMUM OF 6 mm UNLESS NOTED OTHERWISE.
3. ALL FIELD WELDS SHALL BE INSPECTED PER QUALITY ASSURANCE AND SPECIAL INSPECTIONS.

REFERENCE DRAWINGS

1	93M-BOA-NAT-LOT-04833
2	93M-BOA-NAT-LOT-09170
3	93M-BOA-NAT-LOT-01976
4	93M-BOA-NAT-LOT-20021
5	
6	
7	
8	
9	

6TH OF OCTOBER CITY RAIL TRANSIT MONORAIL

The Authority | Consultant: Hill International | Main Contractor: ORASCOM CONSTRUCTION, BOMBARDIER | Structural Designer: INNOVA TRANSPORTATION

KEY PLAN:

SCALE	SHOPDRAWING	DATE
AS SHOWN		12/05/2023

REV	DATE	DSG.	CHK.	APP.	AMENDMENTS	STATUS
B	12/05/2023	M.KH	M.KH	DR.M.M	ISSUED FOR INFORMATION	IFI
A	11/20/2022	M.KH	M.KH	DR.M.M	ISSUED FOR INFORMATION	IFI

DRAWING TITLE
6TH OF OCTOBER MONORAIL
SERVICE WALKWAYS
ZONE (1008)
Z8-HR052

Project Code	Rubric	Initiator	Lot	Ref	Number	Revision
9 3	M 0 4 7 6	A C C	6 0 D E P	D W G	0 8 2 9 3	B

Tekla structures

approval is subject to approval of coordination package between multi-discipline

REVIEWED WITH COMMENT
MONORAILS PROJECT

MATERIAL LIST FOR ASSEMBLY MK'D **Z8-HR053**

Mark	Profile	GRADE	No.	Length	Area	Weight
Z8-HR053	CHS48.3*4.0	S235JR	1	3894	0.58	17.02
W378	CHS48.3*4.0	S235JR	1	317	0.05	1.38
W492	CHS48.3*4.0	S235JR	2	64	0.01	0.28
W556	CHS48.3*4.0	S235JR	1	139	0.02	0.61
				Total	0.67	19.58

BOLT LIST:-

BOLT \ STUD	BOLT DESCRIPTION	QTY	FINISH

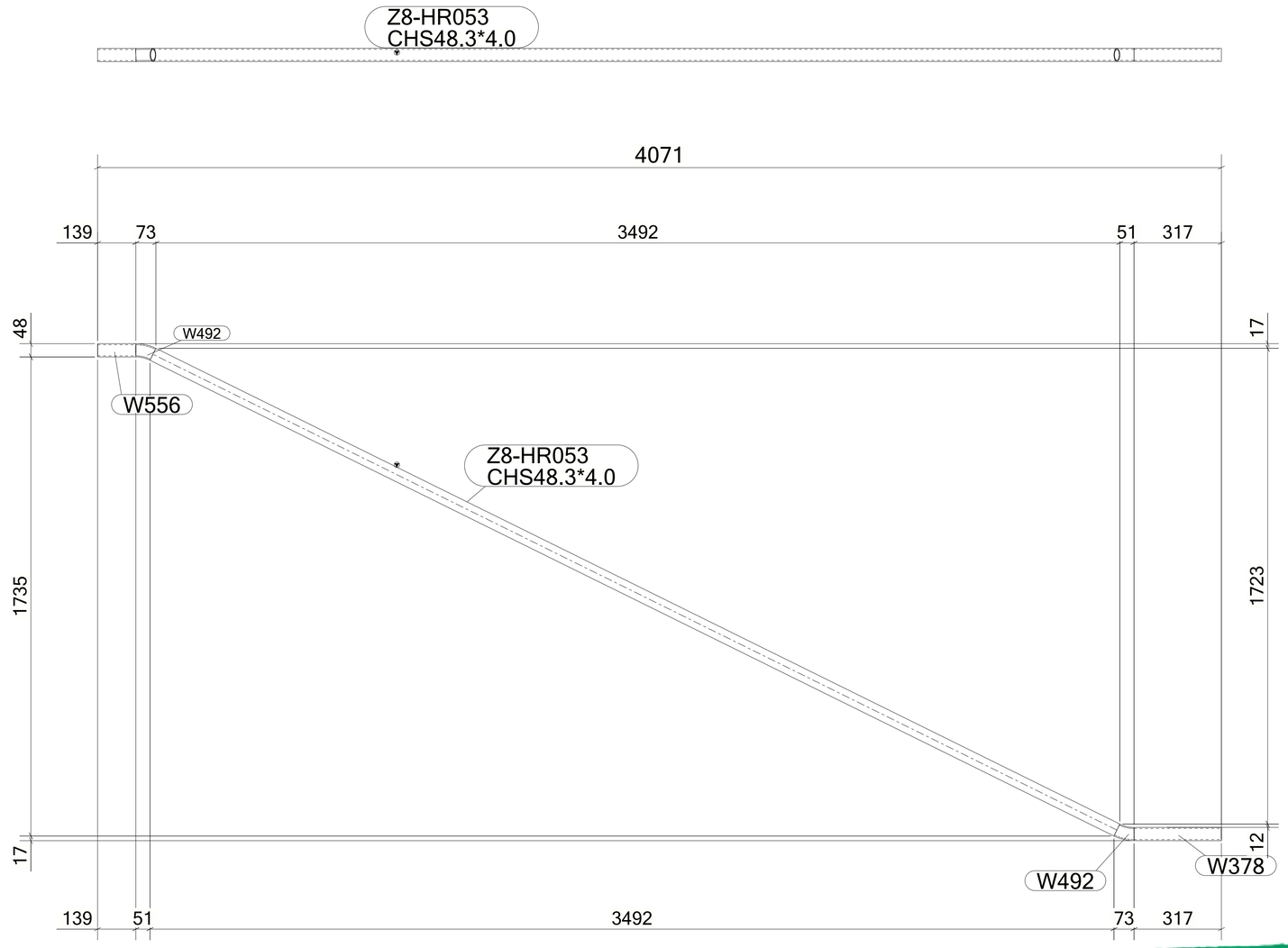

1 *REQUIRED AS DRAWN MARKED* **Z8-HR053**

6 October Monorail
Engineering Unit
Valid For Construction

GENERAL NOTES:

1. THE DIMENSIONS SHOWN ARE NOMINAL (IN MILLIMETERS), U.N.O.
2. WELD SIZESHALL BE AISC MINIMUM OF 6 mm UNLESS NOTED OTHERWISE.
3. ALL FIELD WELDS SHALL BE INSPECTED PER QUALITY ASSURANCE AND SPECIAL INSPECTIONS.

REFERENCE DRAWINGS

1	93M-BOA-NAT-LOT-04833
2	93M-BOA-NAT-LOT-09170
3	93M-BOA-NAT-LOT-01976
4	93M-BOA-NAT-LOT-20021
5	
6	
7	
8	
9	

6TH OF OCTOBER CITY RAIL TRANSIT MONORAIL

The Authority | Consultant: Hill International | Main Contractor: ORASCOM CONSTRUCTION, BOMBARDIER | Structural Designer: INNOVA TRANSPORTATION

KEY PLAN:

SCALE	SHOPDRAWING	DATE
AS SHOWN		12/05/2023

REV	DATE	DSG.	CHK.	APP.	AMENDMENTS	STATUS
B	12/05/2023	M.KH	M.KH	DR.M.M	ISSUED FOR INFORMATION	IFI
A	11/20/2022	M.KH	M.KH	DR.M.M	ISSUED FOR INFORMATION	IFI

DRAWING TITLE
6TH OF OCTOBER MONORAIL
SERVICE WALKWAYS
ZONE (1008)
Z8-HR053

Project Code	Rubric	Initiator	Lot	Ref	Number	Revision
93M	047	6ACC	60DE	PDWG	08294	B

Tekla structures

approval is subject to approval of coordination package between multi-discipline

REVIEWED WITH COMMENT
MONORAILS PROJECT

MATERIAL LIST FOR ASSEMBLY MK'D **Z8-HR054**

Mark	Profile	GRADE	No.	Length	Area	Weight
Z8-HR054	CHS48.3*4.0	S235JR	1	3894	0.58	17.02
W378	CHS48.3*4.0	S235JR	1	317	0.05	1.38
W492	CHS48.3*4.0	S235JR	2	64	0.01	0.28
W568	CHS48.3*4.0	S235JR	1	1106	0.17	4.84
W745	CHS48.3*4.0	S235JR	1	75	0.01	0.33
				Total	0.83	24.14

BOLT LIST:-

BOLT \ STUD	BOLT DESCRIPTION	QTY	FINISH

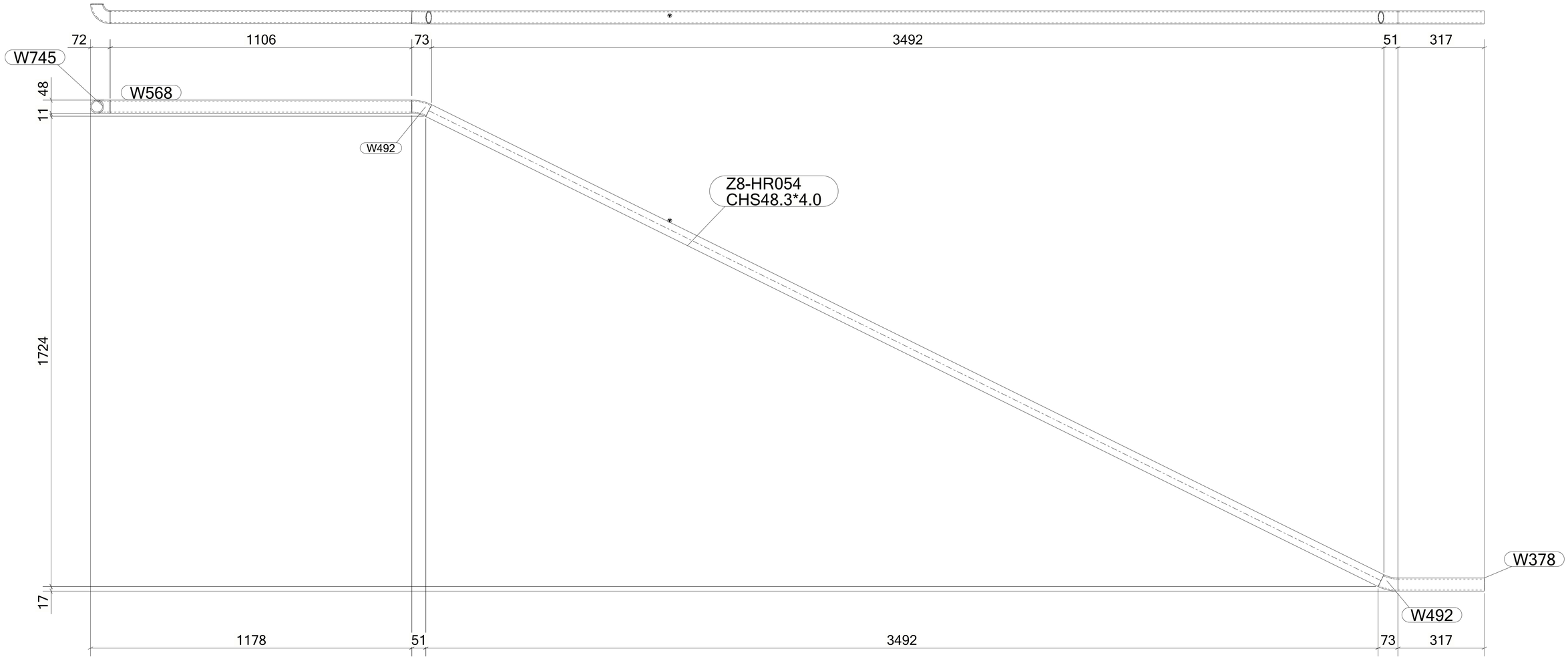

1 *REQUIRED AS DRAWN MARKED* **Z8-HR054**

6 October Monorail
Engineering Unit
Valid For Construction

GENERAL NOTES:

1. THE DIMENSIONS SHOWN ARE NOMINAL (IN MILLIMETERS), U.N.O.
2. WELD SIZESHALL BE AISC MINIMUM OF 6 mm UNLESS NOTED OTHERWISE.
3. ALL FIELD WELDS SHALL BE INSPECTED PER QUALITY ASSURANCE AND SPECIAL INSPECTIONS.

REFERENCE DRAWINGS

1	93M-BOA-NAT-LOT-04833
2	93M-BOA-NAT-LOT-09170
3	93M-BOA-NAT-LOT-01976
4	93M-BOA-NAT-LOT-20021
5	
6	
7	
8	
9	

6TH OF OCTOBER CITY RAIL TRANSIT MONORAIL

The Authority | Consultant: Hill International | Main Contractor: ORASCOM CONSTRUCTION / BOMBARDIER | Structural Designer: INNOVA TRANSPORTATION

KEY PLAN:

SCALE: AS SHOWN | SHOPDRAWING | DATE: 12/05/2023

REV	DATE	DSG.	CHK.	APP.	AMENDMENTS	STATUS
B	12/05/2023	MKH	MKH	DRMM	ISSUED FOR INFORMATION	IFI
A	11/20/2022	MKH	MKH	DRMM	ISSUED FOR INFORMATION	IFI

DRAWING TITLE
6TH OF OCTOBER MONORAIL
SERVICE WALKWAYS
ZONE (1008)
Z8-HR054

Project Code	Rubric	Initiator	Lot	Ref	Number	Revision
93M	047	ACC	60DEP	DWG	08295	B

Tekla structures

approval is subject to approval of coordination package between multi-discipline

REVIEWED WITH COMMENT
MONORAILS PROJECT

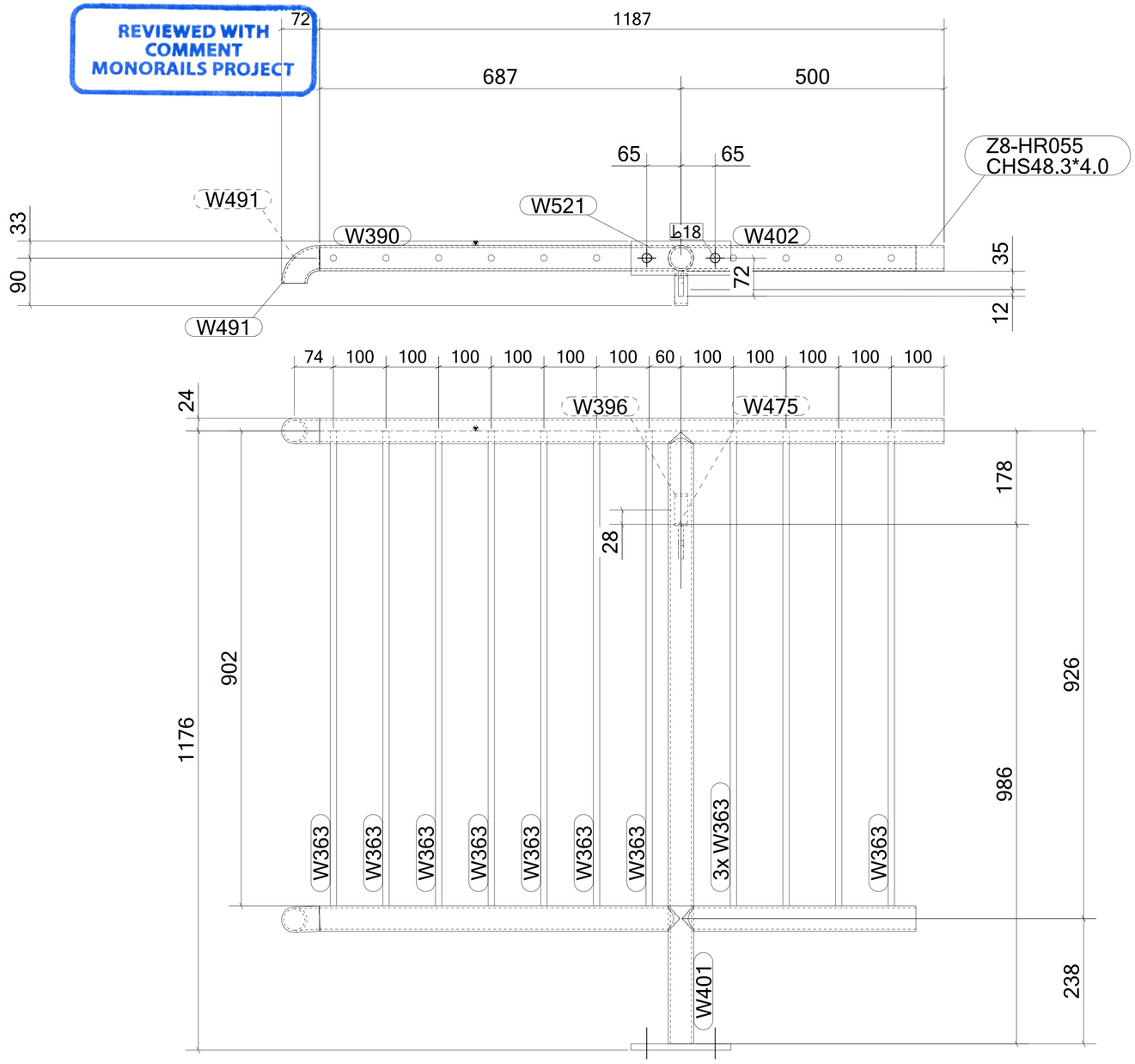

MATERIAL LIST FOR ASSEMBLY MK'D **Z8-HR055**

Mark	Profile	GRADE	No.	Length	Area	Weight
Z8-HR055	CHS48.3*4.0	S235JR	1	1187	0.18	5.19
W363	ROD12	S355JR	11	902	0.03	0.72
W390	CHS48.3*4.0	S235JR	1	685	0.10	2.99
W396	PIPE2SCH40	S235JR	1	25	0.01	0.14
W401	CHS48.3*4.0	S235JR	1	1162	0.17	5.08
W402	CHS48.3*4.0	S235JR	1	445	0.07	1.94
W475	PL10*25	S355JR	1	77	0.01	0.15
W491	CHS48.3*4.0	S235JR	2	75	0.01	0.33
W521	PL12*65	S355JR	1	190	0.03	1.16
				Total	0.95	25.24

BOLT LIST:-

BOLT \ STUD	BOLT DESCRIPTION		QTY	FINISH
BOLT	B1N2W 16 X 50	A325M	2	

1 *REQUIRED AS DRAWN MARKED* **Z8-HR055**

GENERAL NOTES:

1. THE DIMENSIONS SHOWN ARE NOMINAL (IN MILLIMETERS), U.N.O.
2. WELD SIZESHALL BE AISC MINIMUM OF 6 mm UNLESS NOTED OTHERWISE.
3. ALL FIELD WELDS SHALL BE INSPECTED PER QUALITY ASSURANCE AND SPECIAL INSPECTIONS.

REFERENCE DRAWINGS

1	93M-BOA-NAT-LOT-04833
2	93M-BOA-NAT-LOT-09170
3	93M-BOA-NAT-LOT-01976
4	93M-BOA-NAT-LOT-20021
5	
6	
7	
8	
9	

6TH OF OCTOBER CITY RAIL TRANSIT MONORAIL

The Authority | Hill International Consultant | Main Contractor | Structural Designer

KEY PLAN:

6 October Monorail
Engineering Unit
Valid For Construction

SCALE: AS SHOWN | SHOPDRAWING | DATE: 12/05/2023

REV	DATE	DSG.	CHK.	APP.	AMENDMENTS	STATUS
B	12/05/2023	M.KH	M.KH	DR.M.M	ISSUED FOR INFORMATION	IFI
A	11/20/2022	M.KH	M.KH	DR.M.M	ISSUED FOR INFORMATION	IFI

DRAWING TITLE
6TH OF OCTOBER MONORAIL
SERVICE WALKWAYS
ZONE (1008)
Z8-HR055

Project Code	Rubric	Initiator	Lot	Ref	Number	Revision
93M	047	6ACC	60DE	PDWG	08296	B

Tekla structures

approval is subject to approval of coordination package between multi-discipline

REVIEWED WITH COMMENT
MONORAILS PROJECT

MATERIAL LIST FOR ASSEMBLY MK'D **Z8-HR056**

Mark	Profile	GRADE	No.	Length	Area	Weight
Z8-HR056	CHS48.3*4.0	S235JR	1	3815	0.57	16.68
W366	CHS48.3*4.0	S235JR	1	330	0.05	1.44
W480	CHS48.3*4.0	S235JR	1	299	0.04	1.31
W481	CHS48.3*4.0	S235JR	1	118	0.02	0.52
W491	CHS48.3*4.0	S235JR	1	75	0.01	0.33
W492	CHS48.3*4.0	S235JR	1	64	0.01	0.28
W493	CHS48.3*4.0	S235JR	1	22	0.00	0.10
W495	PL3*45	S355JR	1	45	0.00	0.03
				Total	0.71	20.69

BOLT LIST:-

BOLT \ STUD	BOLT DESCRIPTION	QTY	FINISH

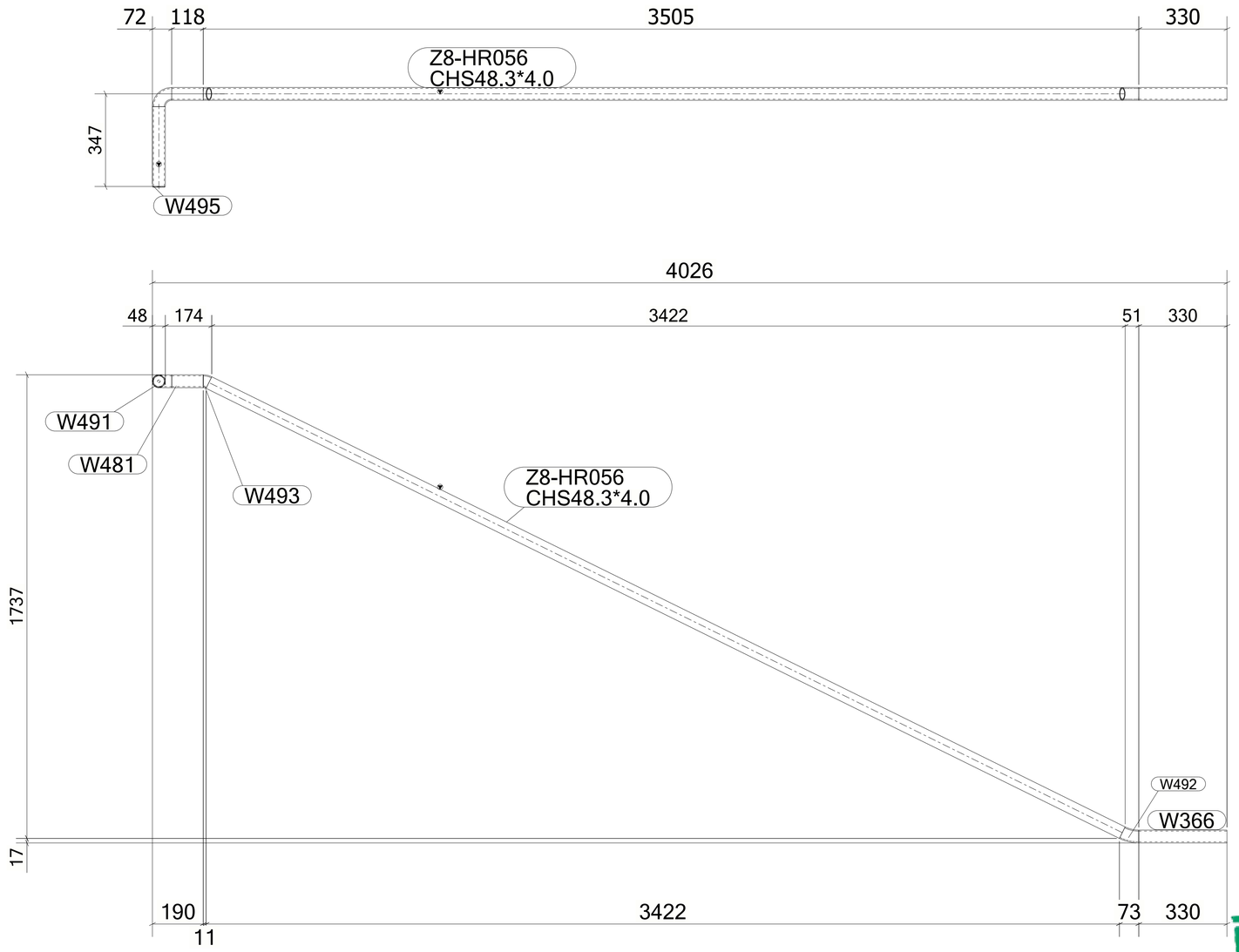

1 *REQUIRED AS DRAWN MARKED* **Z8-HR056**

6 October Monorail
Engineering Unit
Valid For Construction

GENERAL NOTES:

1. THE DIMENSIONS SHOWN ARE NOMINAL (IN MILLIMETERS), U.N.O.
2. WELD SIZESHALL BE AISC MINIMUM OF 6 mm UNLESS NOTED OTHERWISE.
3. ALL FIELD WELDS SHALL BE INSPECTED PER QUALITY ASSURANCE AND SPECIAL INSPECTIONS.

REFERENCE DRAWINGS

1	93M-BOA-NAT-LOT-04833
2	93M-BOA-NAT-LOT-09170
3	93M-BOA-NAT-LOT-01976
4	93M-BOA-NAT-LOT-20021
5	
6	
7	
8	
9	

6TH OF OCTOBER CITY RAIL TRANSIT MONORAIL

The Authority | Consultant: Hill International | Main Contractor | Structural Designer

KEY PLAN:

SCALE: AS SHOWN | SHOPDRAWING | DATE: 12/05/2023

REV	DATE	DSG.	CHK.	APP.	AMENDMENTS	STATUS
B	12/05/2023	MKH	MKH	DRMM	ISSUED FOR INFORMATION	IFI
A	11/20/2022	MKH	MKH	DRMM	ISSUED FOR INFORMATION	IFI

DRAWING TITLE
6TH OF OCTOBER MONORAIL
SERVICE WALKWAYS
ZONE (1008)
Z8-HR056

Project Code	Rubric	Initiator	Lot	Ref	Number	Revision
93M	047	6ACC	60DE	PDWG	08297	B

Tekla structures

approval is subject to approval of coordination package between multi-discipline

REVIEWED WITH COMMENT MONORAILS PROJECT

MATERIAL LIST FOR ASSEMBLY MK'D **Z8-HR057**

Mark	Profile	GRADE	No.	Length	Area	Weight
Z8-HR057	CHS48.3*4.0	S235JR	1	3789	0.57	16.57
W366	CHS48.3*4.0	S235JR	1	330	0.05	1.44
W483	CHS48.3*4.0	S235JR	1	309	0.05	1.35
W492	CHS48.3*4.0	S235JR	1	64	0.01	0.28
W495	PL3*45	S355JR	1	45	0.00	0.03
W587	CHS48.3*4.0	S235JR	1	137	0.02	0.60
W608	CHS48.3*4.0	S355-JR	1	75	0.01	0.33
W609	CHS48.3*4.0	S355-JR	1	64	0.01	0.28
				Total	0.72	20.89

BOLT LIST:-

BOLT \ STUD	BOLT DESCRIPTION	QTY	FINISH

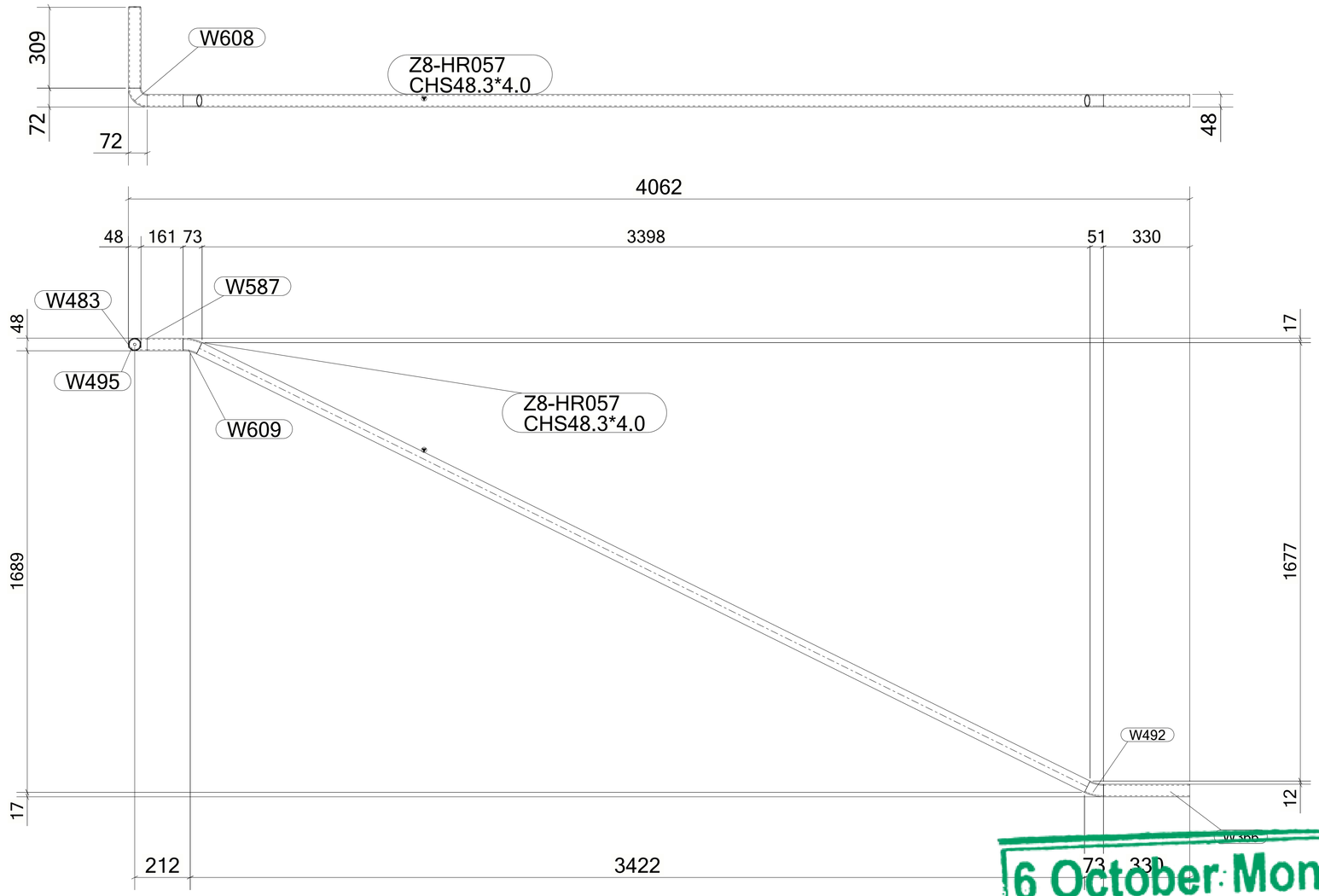

1 *REQUIRED AS DRAWN MARKED* **Z8-HR057**

6 October Monorail Engineering Unit
Valid For Construction

GENERAL NOTES:

1. THE DIMENSIONS SHOWN ARE NOMINAL (IN MILLIMETERS), U.N.O.
2. WELD SIZESHALL BE AISC MINIMUM OF 6 mm UNLESS NOTED OTHERWISE.
3. ALL FIELD WELDS SHALL BE INSPECTED PER QUALITY ASSURANCE AND SPECIAL INSPECTIONS.

REFERENCE DRAWINGS

1	93M-BOA-NAT-LOT-04833
2	93M-BOA-NAT-LOT-09170
3	93M-BOA-NAT-LOT-01976
4	93M-BOA-NAT-LOT-20021
5	
6	
7	
8	
9	

6TH OF OCTOBER CITY RAIL TRANSIT MONORAIL

The Authority | Hill International Consultant | ORASCOM BOMBARDIER Main Contractor | INNOVA Structural Designer

KEY PLAN:

SCALE	SHOPDRAWING	DATE
AS SHOWN		12/05/2023

REV	DATE	DSG.	CHK.	APP.	AMENDMENTS	STATUS
B	12/05/2023	M.KH	M.KH	DR.M.M	ISSUED FOR INFORMATION	IFI
A	11/20/2022	M.KH	M.KH	DR.M.M	ISSUED FOR INFORMATION	IFI

DRAWING TITLE
6TH OF OCTOBER MONORAIL
SERVICE WALKWAYS
ZONE (1008)
Z8-HR057

Project Code	Rubric	Initiator	Lot	Ref	Number	Revision
93M	0476	ACC	60DEP	DWG	08298	B

Tekla structures

approval is subject to approval of coordination package between multi-discipline

REVIEWED WITH COMMENT
MONORAILS PROJECT

MATERIAL LIST FOR ASSEMBLY MK'D **Z8-HR058**

Mark	Profile	GRADE	No.	Length	Area	Weight
Z8-HR058	CHS48.3*4.0	S235JR	1	1880	0.28	8.22
W376	ROD32	S235JR	1	100	0.01	0.60
W395	CHS48.3*4.0	S235JR	1	301	0.05	1.32
W492	CHS48.3*4.0	S235JR	1	64	0.01	0.28
W495	PL3*45	S355JR	1	45	0.00	0.03
				Total	0.35	10.46

BOLT LIST:-

BOLT \ STUD	BOLT DESCRIPTION	QTY	FINISH

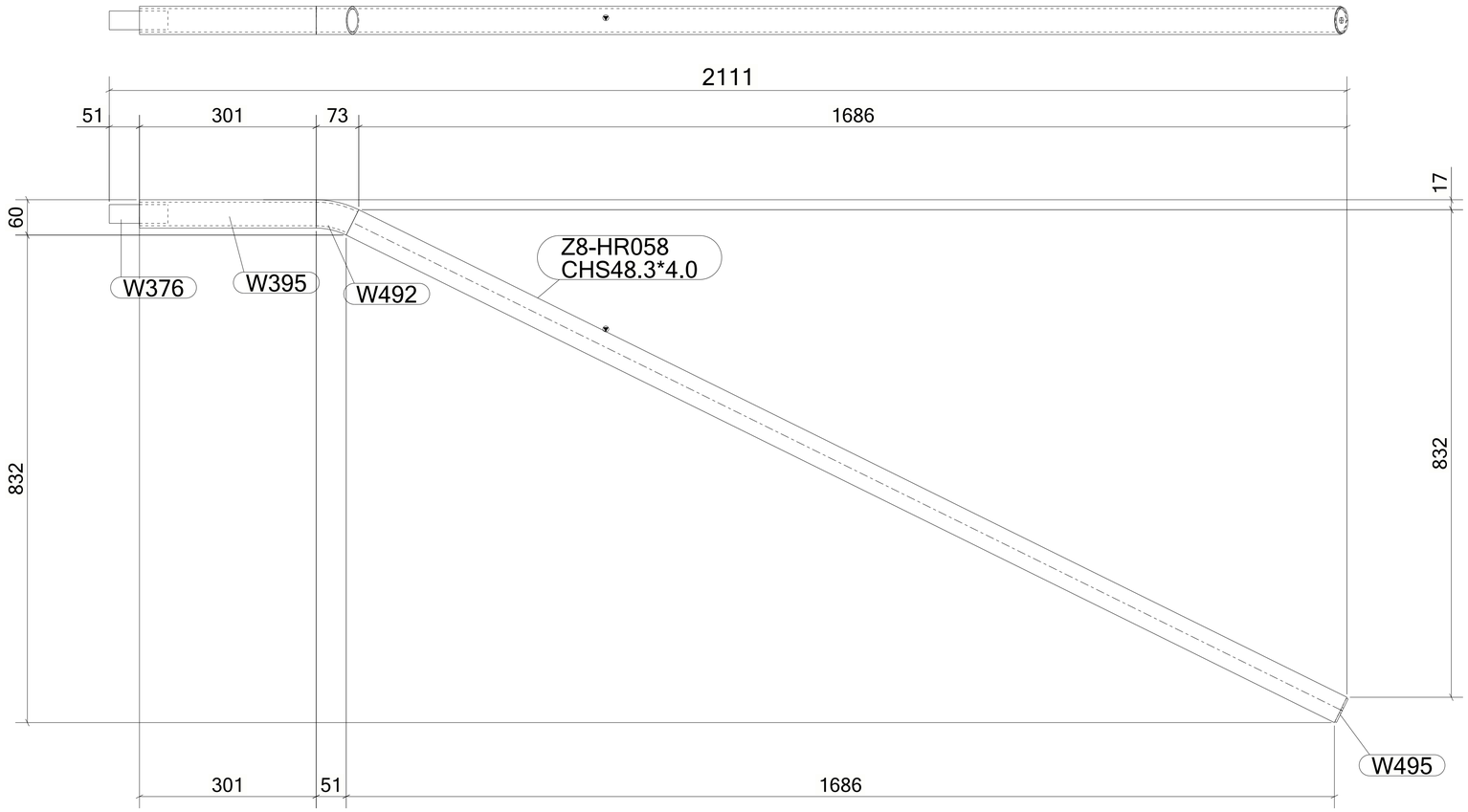

2 *REQUIRED AS DRAWN MARKED* **Z8-HR058**

6 October Monorail
Engineering Unit
Valid For Construction

GENERAL NOTES:

1. THE DIMENSIONS SHOWN ARE NOMINAL (IN MILLIMETERS), U.N.O.
2. WELD SIZESHALL BE AISC MINIMUM OF 6 mm UNLESS NOTED OTHERWISE.
3. ALL FIELD WELDS SHALL BE INSPECTED PER QUALITY ASSURANCE AND SPECIAL INSPECTIONS.

REFERENCE DRAWINGS

1	93M-BOA-NAT-LOT-04833
2	93M-BOA-NAT-LOT-09170
3	93M-BOA-NAT-LOT-01976
4	93M-BOA-NAT-LOT-20021
5	
6	
7	
8	
9	

6TH OF OCTOBER CITY RAIL TRANSIT MONORAIL

The Authority | Consultant: Hill International | Main Contractor: ORASCOM CONSTRUCTION / BOMBARDIER | Structural Designer: INNOVA TRANSPORTATION

KEY PLAN:

SCALE: AS SHOWN | SHOPDRAWING | DATE: 12/05/2023

REV	DATE	DSG.	CHK.	APP.	AMENDMENTS	STATUS
B	12/05/2023	MKH	MKH	DRMM	ISSUED FOR INFORMATION	IFI
A	11/20/2022	MKH	MKH	DRMM	ISSUED FOR INFORMATION	IFI

DRAWING TITLE
6TH OF OCTOBER MONORAIL
SERVICE WALKWAYS
ZONE (1008)
Z8-HR058

Project Code	Rubric	Initiator	Lot	Ref	Number	Revision
93M	0476	ACC	60DEP	DWG	08299	B

Tekla structures

approval is subject to approval of coordination package between multi-discipline

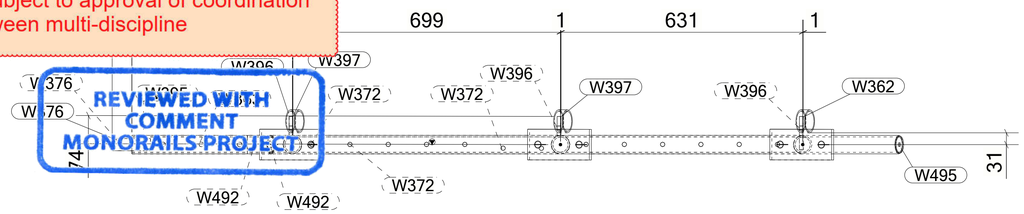

REVIEWED WITH COMMENT MONORAILS PROJECT

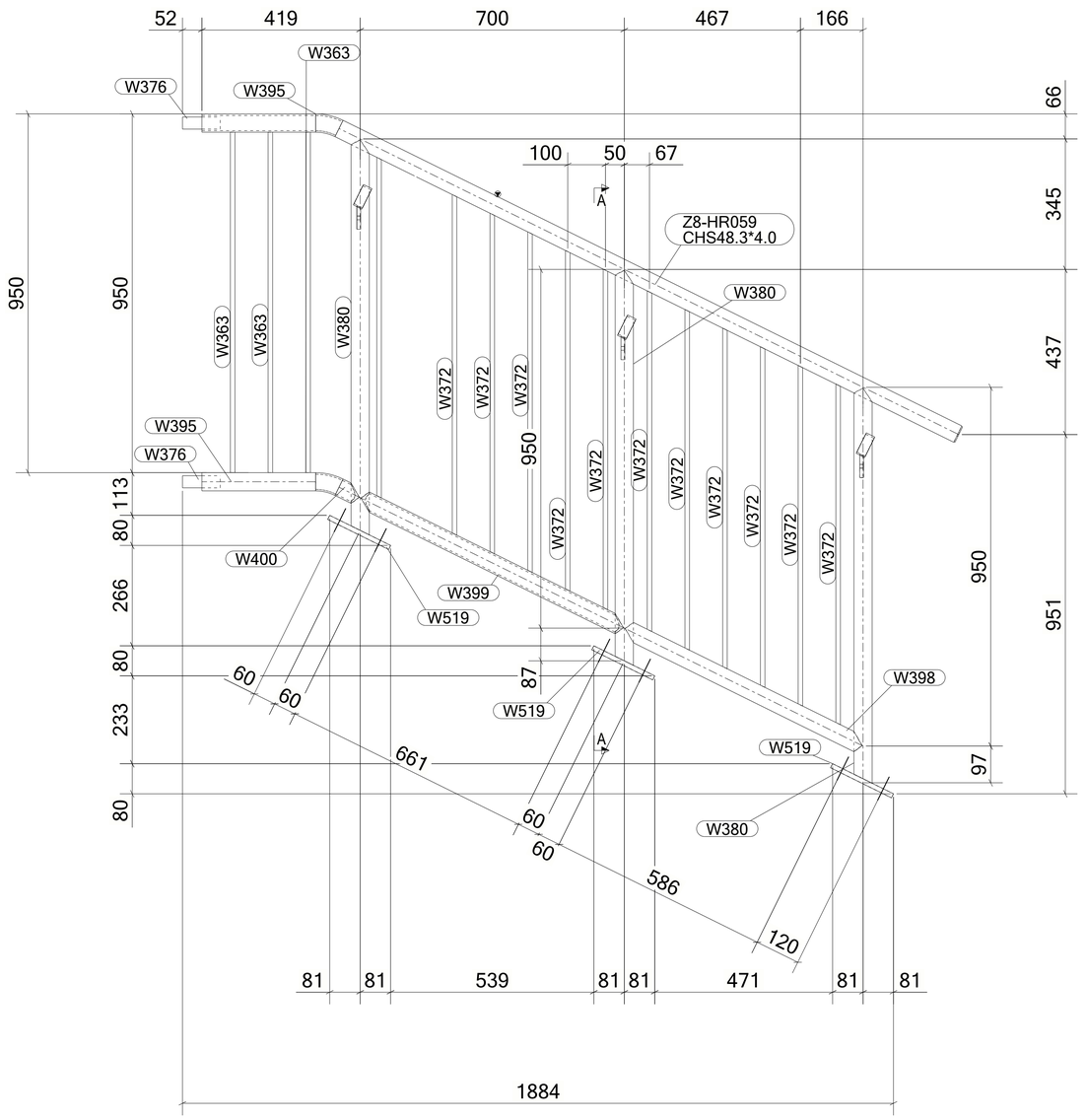

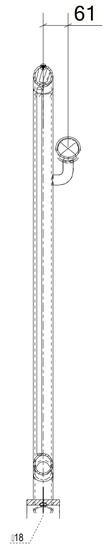

A - A

MATERIAL LIST FOR ASSEMBLY MK'D **Z8-HR059**

Mark	Profile	GRADE	No.	Length	Area	Weight
Z8-HR059	CHS48.3*4.0	S235JR	1	1829	0.27	8.00
W362	PL10*25	S355JR	1	115	0.01	0.22
W363	ROD12	S355JR	3	902	0.03	0.72
W372	ROD12	S355JR	13	902	0.03	0.72
W376	ROD32	S235JR	2	100	0.01	0.60
W380	CHS48.3*4.0	S235JR	3	1047	0.16	4.58
W395	CHS48.3*4.0	S235JR	2	301	0.05	1.32
W396	PIPE2SCH40	S235JR	3	25	0.01	0.14
W397	PL10*25	S355JR	2	79	0.01	0.14
W398	CHS48.3*4.0	S235JR	1	702	0.11	3.07
W399	CHS48.3*4.0	S235JR	1	777	0.12	3.40
W400	CHS48.3*4.0	S235JR	1	60	0.01	0.26
W492	CHS48.3*4.0	S235JR	2	64	0.01	0.28
W495	PL3*45	S355JR	1	45	0.00	0.03
W519	PL12*80	S355JR	3	180	0.04	1.36
				Total	1.78	49.34

BOLT LIST:-

BOLT \ STUD	BOLT DESCRIPTION		QTY	FINISH
BOLT	B1N2W16 X 60	A325M	6	

1 *REQUIRED AS DRAWN MARKED* **Z8-HR059**

GENERAL NOTES:

1. THE DIMENSIONS SHOWN ARE NOMINAL (IN MILLIMETERS), U.N.O.
2. WELD SIZESHALL BE AISC MINIMUM OF 6 mm UNLESS NOTED OTHERWISE.
3. ALL FIELD WELDS SHALL BE INSPECTED PER QUALITY ASSURANCE AND SPECIAL INSPECTIONS.

REFERENCE DRAWINGS

1	93M-BOA-NAT-LOT-04833
2	93M-BOA-NAT-LOT-09170
3	93M-BOA-NAT-LOT-01976
4	93M-BOA-NAT-LOT-20021
5	
6	
7	
8	
9	

6TH OF OCTOBER CITY RAIL TRANSIT MONORAIL

The Authority — Consultant: Hill International — Main Contractor: ORASCOM CONSTRUCTION / BOMBARDIER — Structural Designer: INNOVA TRANSPORTATION

KEY PLAN:

6 October Monorail Engineering Unit Valid For Construction

SCALE	SHOPDRAWING	DATE
AS SHOWN		12/05/2023

REV	DATE	DSG.	CHK.	APP.	AMENDMENTS	STATUS
B	12/05/2023	M.KH	M.KH	DR.M.M	ISSUED FOR INFORMATION	IFI
A	11/20/2022	M.KH	M.KH	DR.M.M	ISSUED FOR INFORMATION	IFI

DRAWING TITLE
6TH OF OCTOBER MONORAIL
SERVICE WALKWAYS
ZONE (1008)
Z8-HR059

Project Code	Rubric	Initiator	Lot	Ref	Number	Revision
93M047	6ACC60	DEP	DWG	0830	0	B

Tekla structures

approval is subject to approval of coordination package between multi-discipline

REVIEWED WITH COMMENT
MONORAILS PROJECT

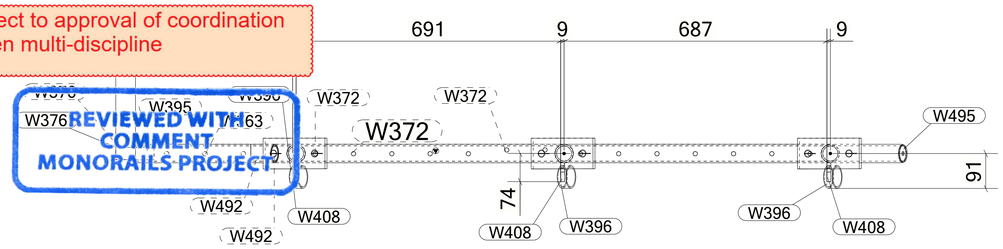

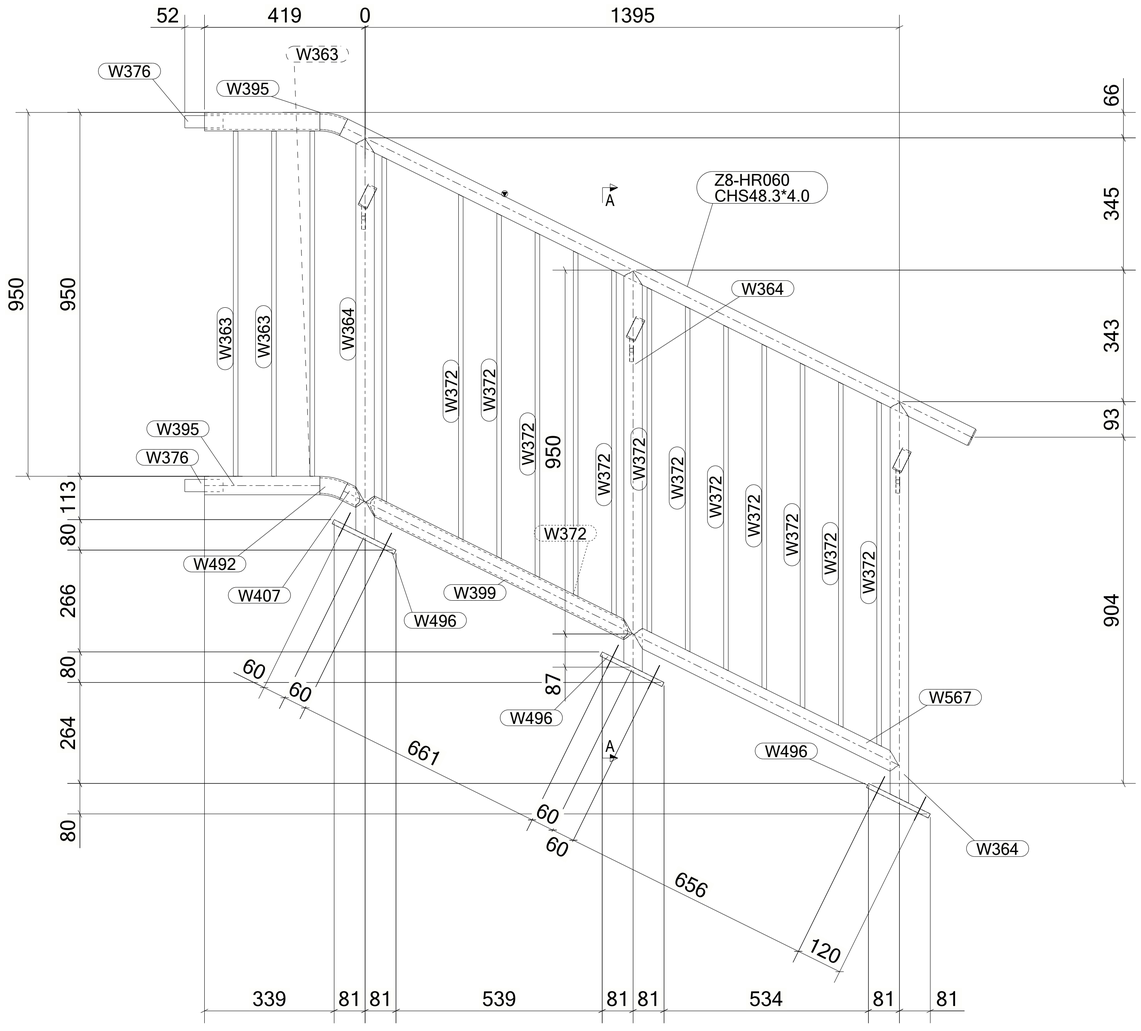

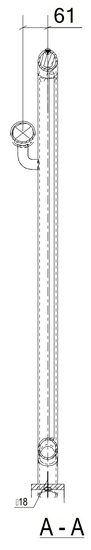

A - A

MATERIAL LIST FOR ASSEMBLY MK'D **Z8-HR060**

Mark	Profile	GRADE	No.	Length	Area	Weight
Z8-HR060	CHS48.3*4.0	S235JR	1	1829	0.27	8.00
W363	ROD12	S355JR	3	901	0.03	0.72
W364	CHS48.3*4.0	S235JR	3	1047	0.16	4.58
W372	ROD12	S355JR	14	902	0.03	0.72
W376	ROD32	S235JR	2	100	0.01	0.60
W395	CHS48.3*4.0	S235JR	2	301	0.05	1.32
W396	PIPE2SCH40	S235JR	3	25	0.01	0.14
W399	CHS48.3*4.0	S235JR	1	777	0.12	3.40
W407	CHS48.3*4.0	S235JR	1	60	0.01	0.26
W408	PL10*25	S355JR	3	79	0.01	0.14
W492	CHS48.3*4.0	S235JR	2	64	0.01	0.28
W495	PL3*45	S355JR	1	45	0.00	0.03
W496	PL12*80	S355JR	3	180	0.04	1.36
W567	CHS48.3*4.0	S235JR	1	771	0.12	3.37
				Total	1.82	50.28

BOLT LIST:-

BOLT \ STUD	BOLT DESCRIPTION		QTY	FINISH
BOLT	B1N2W 16 X 60	A325M	6	

1 *REQUIRED AS DRAWN MARKED* **Z8-HR060**

GENERAL NOTES:

1. THE DIMENSIONS SHOWN ARE NOMINAL (IN MILLIMETERS), U.N.O.
2. WELD SIZESHALL BE AISC MINIMUM OF 6 mm UNLESS NOTED OTHERWISE.
3. ALL FIELD WELDS SHALL BE INSPECTED PER QUALITY ASSURANCE AND SPECIAL INSPECTIONS.

REFERENCE DRAWINGS

1	93M-BOA-NAT-LOT-04833
2	93M-BOA-NAT-LOT-09170
3	93M-BOA-NAT-LOT-01976
4	93M-BOA-NAT-LOT-20021
5	
6	
7	
8	
9	

6TH OF OCTOBER CITY RAIL TRANSIT MONORAIL

The Authority — Hill International (Consultant) — Main Contractor — Structural Designer

KEY PLAN:

6 October Monorail
Engineering Unit
Valid For Construction

SCALE	SHOPDRAWING	DATE
AS SHOWN		12/05/2023

REV	DATE	DSG.	CHK.	APP.	AMENDMENTS	STATUS
B	12/05/2023	M.KH	M.KH	DR.M.M	ISSUED FOR INFORMATION	IFI
A	11/20/2022	M.KH	M.KH	DR.M.M	ISSUED FOR INFORMATION	IFI

DRAWING TITLE
6TH OF OCTOBER MONORAIL
SERVICE WALKWAYS
ZONE (1008)
Z8-HR060

Project Code	Rubric	Initiator	Lot	Ref	Number	Revision
93	M047	6ACC	60DEP	DWG	0830	1 B

Tekla structures

approval is subject to approval of coordination package between multi-discipline

REVIEWED WITH COMMENT
MONORAILS PROJECT

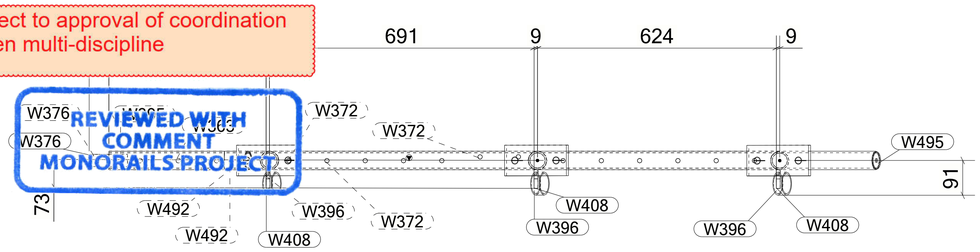

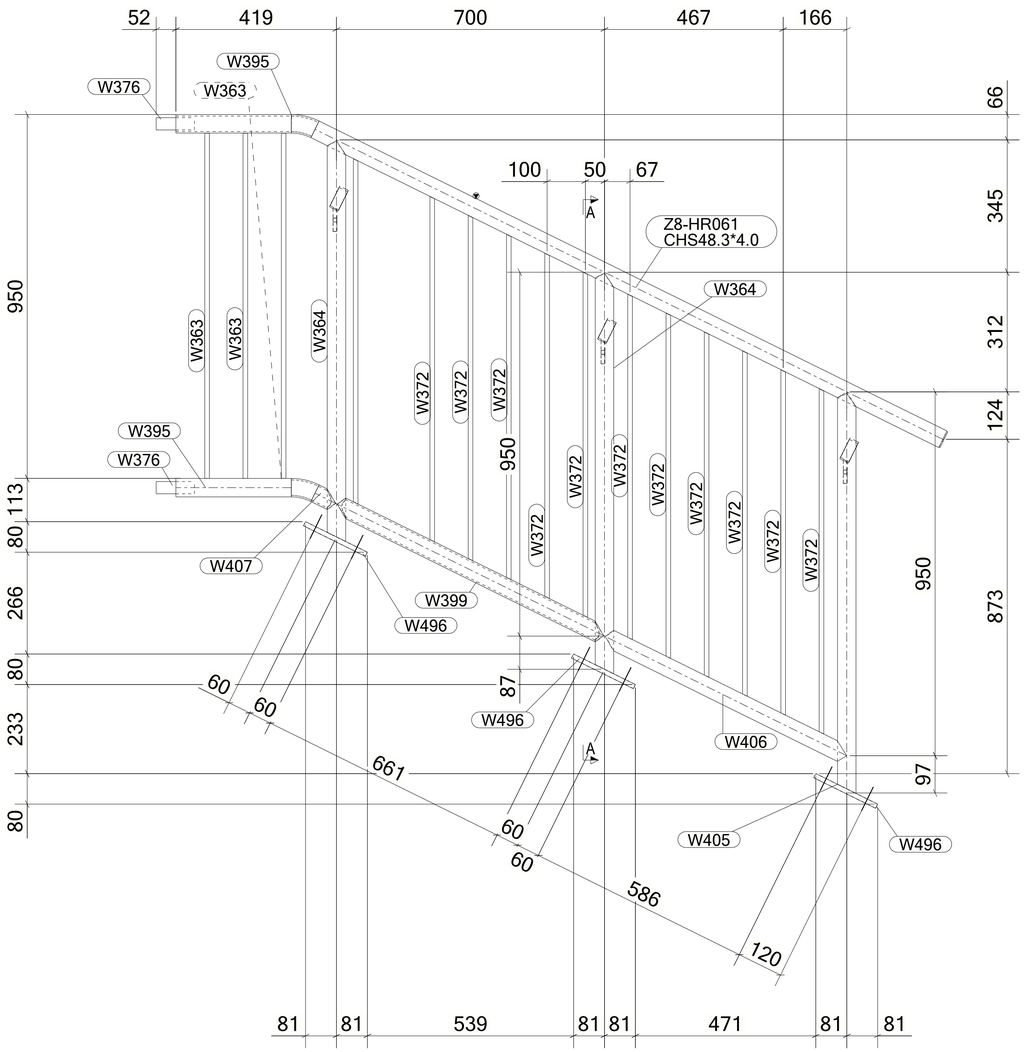

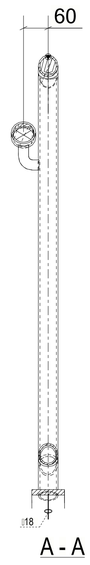

MATERIAL LIST FOR ASSEMBLY MK'D **Z8-HR061**

Mark	Profile	GRADE	No.	Length	Area	Weight
Z8-HR061	CHS48.3*4.0	S235JR	1	1829	0.27	8.00
W363	ROD12	S355JR	3	901	0.03	0.72
W364	CHS48.3*4.0	S235JR	2	1047	0.16	4.58
W372	ROD12	S355JR	13	902	0.03	0.72
W376	ROD32	S235JR	2	100	0.01	0.60
W395	CHS48.3*4.0	S235JR	2	301	0.05	1.32
W396	PIPE2SCH40	S235JR	3	25	0.01	0.14
W399	CHS48.3*4.0	S235JR	1	777	0.12	3.40
W405	CHS48.3*4.0	S235JR	1	1049	0.16	4.58
W406	CHS48.3*4.0	S235JR	1	704	0.11	3.08
W407	CHS48.3*4.0	S235JR	1	60	0.01	0.26
W408	PL10*25	S355JR	3	79	0.01	0.14
W492	CHS48.3*4.0	S235JR	2	64	0.01	0.28
W495	PL3*45	S355JR	1	45	0.00	0.03
W496	PL12*80	S355JR	3	180	0.04	1.36
				Total	1.78	49.27

BOLT LIST:-

BOLT \ STUD	BOLT DESCRIPTION		QTY	FINISH
BOLT	B1N2W16 X 60	A325M	6	

1 *REQUIRED AS DRAWN MARKED* **Z8-HR061**

GENERAL NOTES:

1. THE DIMENSIONS SHOWN ARE NOMINAL (IN MILLIMETERS), U.N.O.
2. WELD SIZESHALL BE AISC MINIMUM OF 6 mm UNLESS NOTED OTHERWISE.
3. ALL FIELD WELDS SHALL BE INSPECTED PER QUALITY ASSURANCE AND SPECIAL INSPECTIONS.

REFERENCE DRAWINGS

1	93M-BOA-NAT-LOT-04833
2	93M-BOA-NAT-LOT-09170
3	93M-BOA-NAT-LOT-01976
4	93M-BOA-NAT-LOT-20021
5	
6	
7	
8	
9	

6TH OF OCTOBER CITY RAIL TRANSIT MONORAIL

The Authority | Consultant: Hill International | Main Contractor: ORASCOM CONSTRUCTION / BOMBARDIER | Structural Designer: INNOVA TRANSPORTATION

KEY PLAN:

6 October Monorail
Engineering Unit
Valid For Construction

SCALE: AS SHOWN | SHOPDRAWING | DATE: 12/05/2023

REV	DATE	DSG.	CHK.	APP.	AMENDMENTS	STATUS
B	12/05/2023	M.KH	M.KH	DR.M.M	ISSUED FOR INFORMATION	IFI
A	11/20/2022	M.KH	M.KH	DR.M.M	ISSUED FOR INFORMATION	IFI

DRAWING TITLE
6TH OF OCTOBER MONORAIL
SERVICE WALKWAYS
ZONE (1008)
Z8-HR061

Project Code	Rubric	Initiator	Lot	Ref	Number	Revision
93	M047	6ACC	60DE	PDWG	0830	2 B

Tekla structures

approval is subject to approval of coordination package between multi-discipline

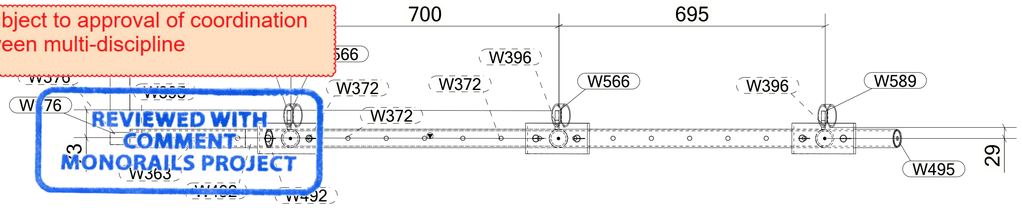

REVIEWED WITH COMMENT
MONORAILS PROJECT

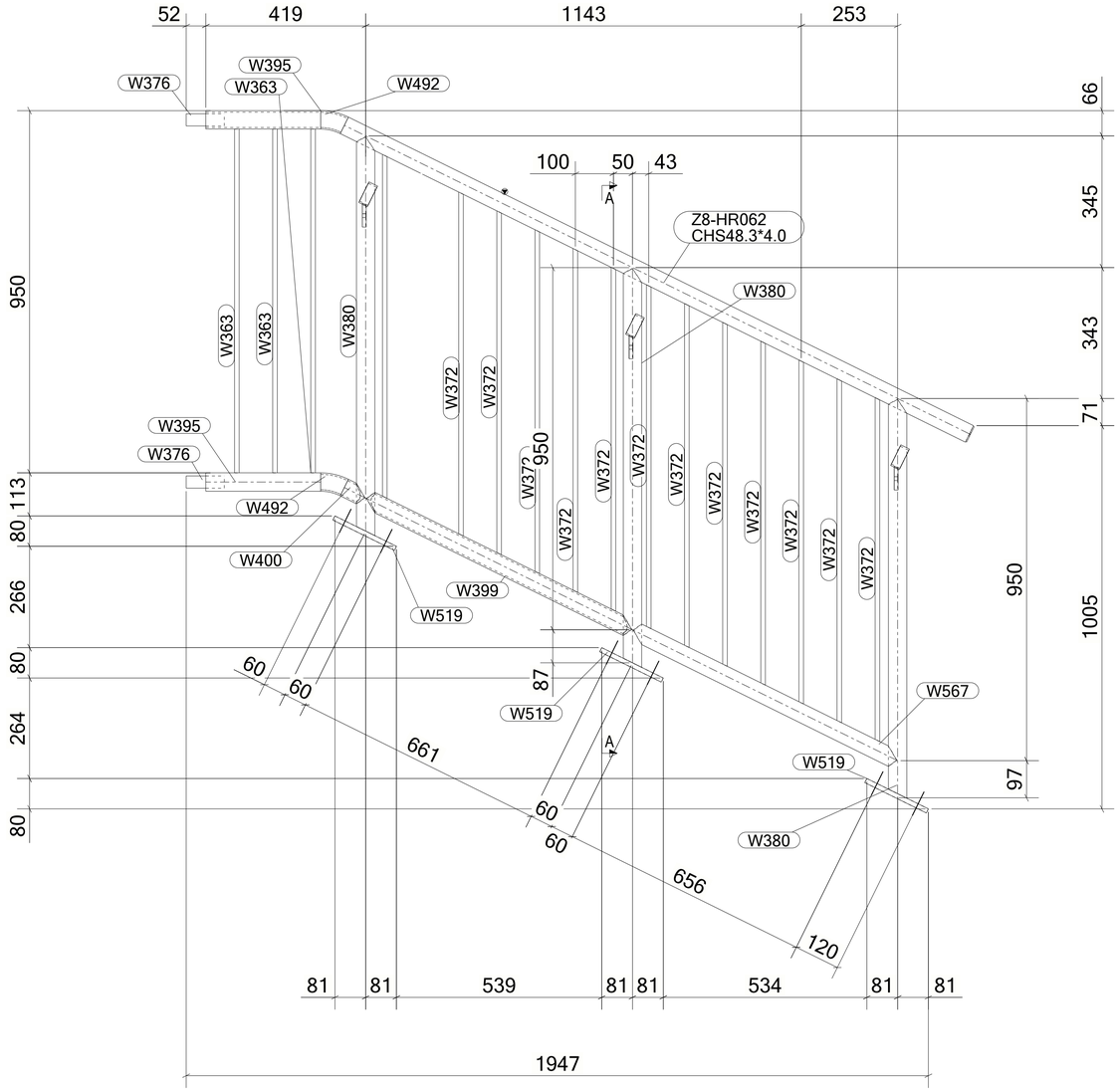

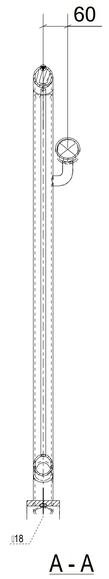

A - A

MATERIAL LIST FOR ASSEMBLY MK'D **Z8-HR062**

Mark	Profile	GRADE	No.	Length	Area	Weight
Z8-HR062	CHS48.3*4.0	S235JR	1	1829	0.27	8.00
W363	ROD12	S355JR	3	902	0.03	0.72
W372	ROD12	S355JR	14	902	0.03	0.72
W376	ROD32	S235JR	2	100	0.01	0.60
W380	CHS48.3*4.0	S235JR	3	1047	0.16	4.58
W395	CHS48.3*4.0	S235JR	2	301	0.05	1.32
W396	PIPE2SCH40	S235JR	3	25	0.01	0.14
W399	CHS48.3*4.0	S235JR	1	777	0.12	3.40
W400	CHS48.3*4.0	S235JR	1	60	0.01	0.26
W492	CHS48.3*4.0	S235JR	2	64	0.01	0.28
W495	PL3*45	S355JR	1	45	0.00	0.03
W519	PL12*80	S355JR	3	180	0.04	1.36
W566	PL10*25	S355JR	2	78	0.01	0.14
W567	CHS48.3*4.0	S235JR	1	771	0.12	3.37
W589	PL10*25	S355JR	1	77	0.01	0.14
				Total	1.82	50.28

BOLT LIST:-

BOLT \ STUD	BOLT DESCRIPTION		QTY	FINISH
BOLT	B1N2W16 X 60	A325M	6	

1 *REQUIRED AS DRAWN MARKED* **Z8-HR062**

GENERAL NOTES:

1. THE DIMENSIONS SHOWN ARE NOMINAL (IN MILLIMETERS), U.N.O.
2. WELD SIZESHALL BE AISC MINIMUM OF 6 mm UNLESS NOTED OTHERWISE.
3. ALL FIELD WELDS SHALL BE INSPECTED PER QUALITY ASSURANCE AND SPECIAL INSPECTIONS.

REFERENCE DRAWINGS

1	93M-BOA-NAT-LOT-04833
2	93M-BOA-NAT-LOT-09170
3	93M-BOA-NAT-LOT-01976
4	93M-BOA-NAT-LOT-20021
5	
6	
7	
8	
9	

6TH OF OCTOBER CITY RAIL TRANSIT MONORAIL

The Authority — Hill International Consultant — Main Contractor — Structural Designer

KEY PLAN:

6 October Monorail
Engineering Unit
Valid For Construction

SCALE	SHOPDRAWING	DATE
AS SHOWN		12/05/2023

REV	DATE	DSG.	CHK.	APP.	AMENDMENTS	STATUS
B	12/05/2023	M.KH	M.KH	DR.M.M	ISSUED FOR INFORMATION	IFI
A	11/20/2022	M.KH	M.KH	DR.M.M	ISSUED FOR INFORMATION	IFI

DRAWING TITLE
6TH OF OCTOBER MONORAIL SERVICE WALKWAYS ZONE (1008)
Z8-HR062

Project Code	Rubric	Initiator	Lot	Ref	Number	Revision
93M	047	6ACC	60DE	PDWG	0830	B

Tekla structures

approval is subject to approval of coordination package between multi-discipline

REVIEWED WITH COMMENT
MONORAILS PROJECT

MATERIAL LIST FOR ASSEMBLY MK'D **Z8-HR063**

Mark	Profile	GRADE	No.	Length	Area	Weight
Z8-HR063	CHS48.3*4.0	S235JR	1	1829	0.27	8.00
W376	ROD32	S235JR	1	100	0.01	0.60
W395	CHS48.3*4.0	S235JR	1	301	0.05	1.32
W492	CHS48.3*4.0	S235JR	1	64	0.01	0.28
W495	PL3*45	S355JR	1	45	0.00	0.03
				Total	0.34	10.23

BOLT LIST:-

BOLT \ STUD	BOLT DESCRIPTION	QTY	FINISH

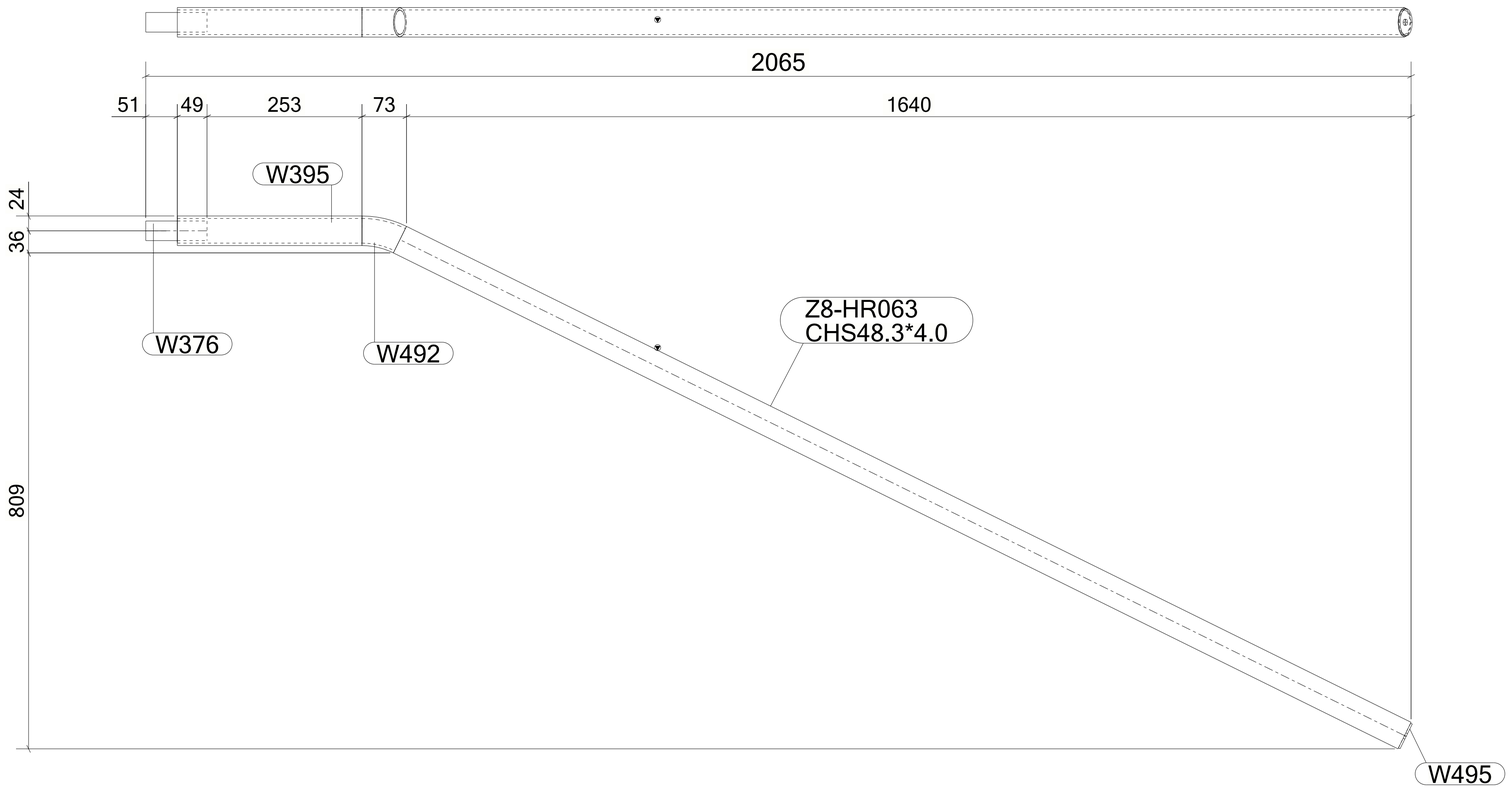

2 *REQUIRED AS DRAWN MARKED* **Z8-HR063**

GENERAL NOTES:

1. THE DIMENSIONS SHOWN ARE NOMINAL (IN MILLIMETERS), U.N.O.
2. WELD SIZESHALL BE AISC MINIMUM OF 6 mm UNLESS NOTED OTHERWISE.
3. ALL FIELD WELDS SHALL BE INSPECTED PER QUALITY ASSURANCE AND SPECIAL INSPECTIONS.

REFERENCE DRAWINGS

1	93M-BOA-NAT-LOT-04833
2	93M-BOA-NAT-LOT-09170
3	93M-BOA-NAT-LOT-01976
4	93M-BOA-NAT-LOT-20021
5	
6	
7	
8	
9	

6TH OF OCTOBER CITY RAIL TRANSIT MONORAIL

The Authority | Consultant: Hill International | Main Contractor: ORASCOM CONSTRUCTION, Six Sixth Constructors, BOMBARDIER | Structural Designer: INNOVA TRANSPORTATION

KEY PLAN:

6 October Monorail
Engineering Unit
Valid For Construction

SCALE	SHOPDRAWING	DATE
AS SHOWN		12/05/2023

REV	DATE	DSG.	CHK.	APP.	AMENDMENTS	STATUS
B	12/05/2023	M.KH	M.KH	DR.M.M	ISSUED FOR INFORMATION	IFI
A	11/20/2022	M.KH	M.KH	DR.M.M	ISSUED FOR INFORMATION	IFI

DRAWING TITLE
6TH OF OCTOBER MONORAIL
SERVICE WALKWAYS
ZONE (1008)
Z8-HR063

Project Code	Rubric	Initiator	Lot	Ref	Number	Revision
93M	047	6ACC	60DE	PDWG	0830	4 B

Tekla structures

approval is subject to approval of coordination package between multi-discipline

REVIEWED WITH COMMENT
MONORAILS PROJECT

MATERIAL LIST FOR ASSEMBLY MK'D **Z8-HR064**

Mark	Profile	GRADE	No.	Length	Area	Weight
Z8-HR064	CHS48.3*4.0	S235JR	1	3692	0.55	16.14
W376	ROD32	S235JR	1	100	0.01	0.60
W378	CHS48.3*4.0	S235JR	1	317	0.05	1.38
W483	CHS48.3*4.0	S235JR	1	309	0.05	1.35
W484	CHS48.3*4.0	S235JR	1	37	0.01	0.16
W491	CHS48.3*4.0	S235JR	1	75	0.01	0.33
W492	CHS48.3*4.0	S235JR	1	64	0.01	0.28
W494	CHS48.3*4.0	S235JR	1	53	0.01	0.23
W495	PL3*45	S355JR	1	45	0.00	0.03
				Total	0.70	20.52

BOLT LIST:-

BOLT \ STUD	BOLT DESCRIPTION	QTY	FINISH

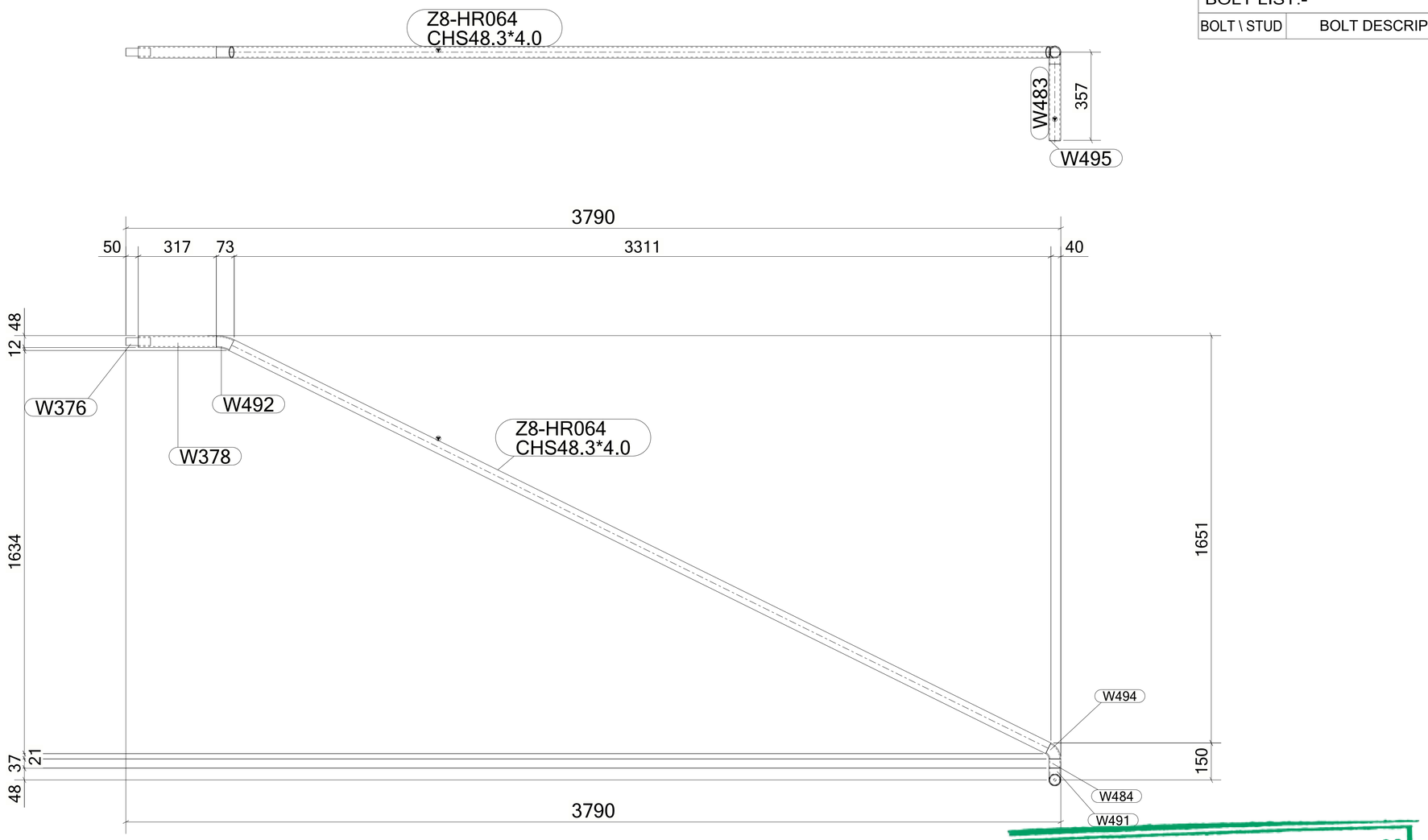

1 *REQUIRED AS DRAWN MARKED* **Z8-HR064**

6 October Monorail
Engineering Unit
Valid For Construction

GENERAL NOTES:

1. THE DIMENSIONS SHOWN ARE NOMINAL (IN MILLIMETERS), U.N.O.
2. WELD SIZESHALL BE AISC MINIMUM OF 6 mm UNLESS NOTED OTHERWISE.
3. ALL FIELD WELDS SHALL BE INSPECTED PER QUALITY ASSURANCE AND SPECIAL INSPECTIONS.

REFERENCE DRAWINGS

1	93M-BOA-NAT-LOT-04833
2	93M-BOA-NAT-LOT-09170
3	93M-BOA-NAT-LOT-01976
4	93M-BOA-NAT-LOT-20021
5	
6	
7	
8	
9	

6TH OF OCTOBER CITY RAIL TRANSIT MONORAIL

The Authority | Hill International Consultant | ORASCOM BOMBARDIER Main Contractor | INNOVA TRANSPORTATION Structural Designer

KEY PLAN:

SCALE	SHOPDRAWING	DATE
AS SHOWN		12/05/2023

REV	DATE	DSG.	CHK.	APP.	AMENDMENTS	STATUS
B	12/05/2023	M.KH	M.KH	DR.M.M	ISSUED FOR INFORMATION	IFI
A	11/20/2022	M.KH	M.KH	DR.M.M	ISSUED FOR INFORMATION	IFI

DRAWING TITLE
6TH OF OCTOBER MONORAIL
SERVICE WALKWAYS
ZONE (1008)
Z8-HR064

Project Code	Rubric	Initiator	Lot	Ref	Number	Revision
93M	047	6ACC	60DE	PDWG	08305	B

Tekla structures

approval is subject to approval of coordination package between multi-discipline

REVIEWED WITH COMMENT
MONORAILS PROJECT

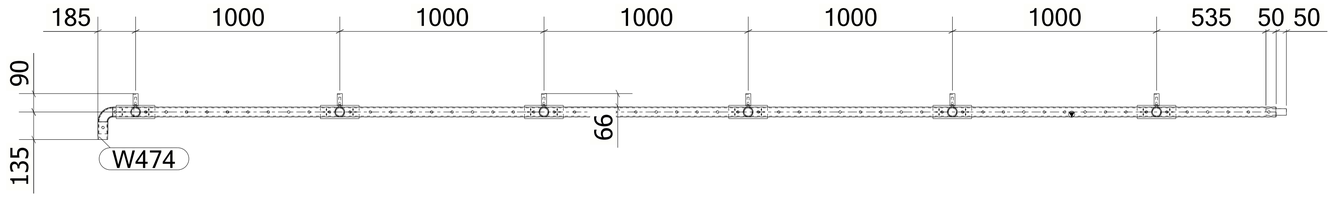

MATERIAL LIST FOR ASSEMBLY MK'D **Z8-HR065**

Mark	Profile	GRADE	No.	Length	Area	Weight
Z8-HR065	CHS48.3*4.0	S235JR	1	5697	0.85	24.91
W363	ROD12	S355JR	62	902	0.03	0.72
W376	ROD32	S235JR	2	100	0.01	0.60
W389	CHS48.3*4.0	S235JR	1	1162	0.17	5.08
W393	CHS48.3*4.0	S235JR	1	103	0.02	0.45
W394	CHS48.3*4.0	S235JR	1	59	0.01	0.26
W396	PIPE2SCH40	S235JR	6	25	0.01	0.14
W401	CHS48.3*4.0	S235JR	5	1162	0.17	5.08
W410	ROD12	S355JR	1	900	0.03	0.72
W473	CHS48.3*4.0	S235JR	5	996	0.15	4.36
W474	CHS48.3*4.0	S235JR	1	87	0.01	0.38
W475	PL10*25	S355JR	6	78	0.01	0.15
W476	CHS48.3*4.0	S235JR	1	584	0.09	2.55
W491	CHS48.3*4.0	S235JR	2	75	0.01	0.33
W516	PL12*65	S355JR	1	190	0.03	1.16
W517	PL12*65	S355JR	4	190	0.03	1.16
W518	PL12*65	S355JR	1	190	0.03	1.16
				Total	5.17	136.78

BOLT LIST:-

BOLT \ STUD	BOLT DESCRIPTION	QTY	FINISH
BOLT	B1N2W 16 X 50 A325M	12	

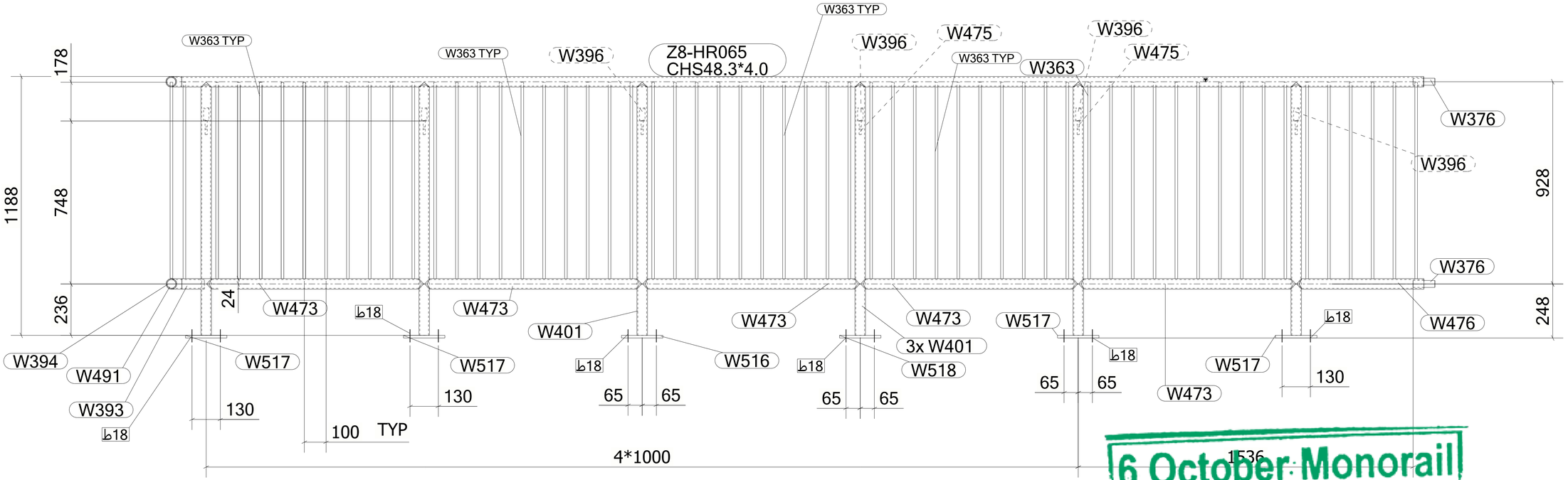

1 *REQUIRED AS DRAWN MARKED* **Z8-HR065**

6 October Monorail
Engineering Unit
Valid For Construction

GENERAL NOTES:

1. THE DIMENSIONS SHOWN ARE NOMINAL (IN MILLIMETERS), U.N.O.
2. WELD SIZESHALL BE AISC MINIMUM OF 6 mm UNLESS NOTED OTHERWISE.
3. ALL FIELD WELDS SHALL BE INSPECTED PER QUALITY ASSURANCE AND SPECIAL INSPECTIONS.

REFERENCE DRAWINGS

1	93M-BOA-NAT-LOT-04833
2	93M-BOA-NAT-LOT-09170
3	93M-BOA-NAT-LOT-01976
4	93M-BOA-NAT-LOT-20021
5	
6	
7	
8	
9	

6TH OF OCTOBER CITY RAIL TRANSIT MONORAIL

The Authority | Consultant: Hill International | Main Contractor: Orascom Construction – Bombardier | Structural Designer: Innova Transportation

KEY PLAN:

SCALE	SHOPDRAWING	DATE
AS SHOWN		12/05/2023

REV	DATE	DSG.	CHK.	APP.	AMENDMENTS	STATUS
B	12/05/2023	MKH	MKH	DRMM	ISSUED FOR INFORMATION	IFI
A	11/20/2022	MKH	MKH	DRMM	ISSUED FOR INFORMATION	IFI

DRAWING TITLE
6TH OF OCTOBER MONORAIL
SERVICE WALKWAYS
ZONE (1008)
Z8-HR065

Project Code	Rubric	Initiator	Lot	Ref	Number	Revision
93	M047	6ACC	60DE	PDWG	08306	B

Tekla structures

approval is subject to approval of coordination package between multi-discipline

REVIEWED WITH COMMENT
MONORAILS PROJECT

MATERIAL LIST FOR ASSEMBLY MK'D **Z8-HR066**

Mark	Profile	GRADE	No.	Length	Area	Weight
Z8-HR066	CHS48.3*4.0	S235JR	1	4791	0.72	20.95
W376	ROD32	S235JR	1	100	0.01	0.60
W514	CHS48.3*4.0	S235JR	1	90	0.01	0.39
				Total	0.74	21.94

BOLT LIST:-

BOLT \ STUD	BOLT DESCRIPTION	QTY	FINISH

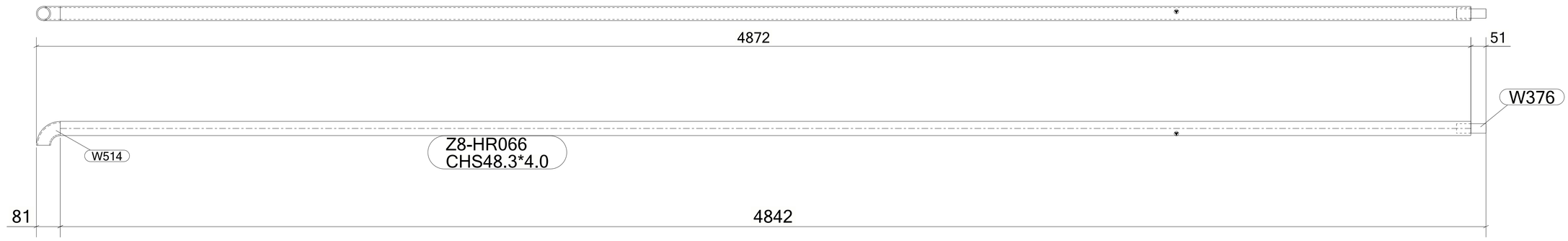

1 *REQUIRED AS DRAWN MARKED* **Z8-HR066**

6 October Monorail
Engineering Unit
Valid For Construction

GENERAL NOTES:

1. THE DIMENSIONS SHOWN ARE NOMINAL (IN MILLIMETERS), U.N.O.
2. WELD SIZESHALL BE AISC MINIMUM OF 6 mm UNLESS NOTED OTHERWISE.
3. ALL FIELD WELDS SHALL BE INSPECTED PER QUALITY ASSURANCE AND SPECIAL INSPECTIONS.

REFERENCE DRAWINGS

1	93M-BOA-NAT-LOT-04833
2	93M-BOA-NAT-LOT-09170
3	93M-BOA-NAT-LOT-01976
4	93M-BOA-NAT-LOT-20021
5	
6	
7	
8	
9	

6TH OF OCTOBER CITY RAIL TRANSIT MONORAIL

The Authority | Consultant: Hill International | Main Contractor: ORASCOM CONSTRUCTION, BOMBARDIER | Structural Designer: INNOVA TRANSPORTATION

KEY PLAN:

SCALE	SHOPDRAWING	DATE
AS SHOWN		12/05/2023

REV	DATE	DSG.	CHK.	APP.	AMENDMENTS	STATUS
B	12/05/2023	M.KH	M.KH	DR.M.M	ISSUED FOR INFORMATION	IFI
A	11/20/2022	M.KH	M.KH	DR.M.M	ISSUED FOR INFORMATION	IFI

DRAWING TITLE
6TH OF OCTOBER MONORAIL
SERVICE WALKWAYS
ZONE (1008)
Z8-HR066

Project Code	Rubric	Initiator	Lot	Ref	Number	Revision
9 3 M 0 4 7 6	A C C	6 0 D E P	D W G	0 8 3 0 7		B

Tekla structures

approval is subject to approval of coordination package between multi-discipline

REVIEWED WITH COMMENT
MONORAILS PROJECT

MATERIAL LIST FOR ASSEMBLY MK'D **Z8-HR067**

Mark	Profile	GRADE	No.	Length	Area	Weight
Z8-HR067	CHS48.3*4.0	S235JR	1	4860	0.73	21.25
W363	ROD12	S355JR	48	902	0.03	0.72
W376	ROD32	S235JR	2	100	0.01	0.60
W388	CHS48.3*4.0	S235JR	1	1132	0.17	4.95
W389	CHS48.3*4.0	S235JR	2	1162	0.17	5.08
W396	PIPE2SCH40	S235JR	4	25	0.01	0.14
W401	CHS48.3*4.0	S235JR	3	1162	0.17	5.08
W403	CHS48.3*4.0	S235JR	1	54	0.01	0.24
W475	PL10*25	S355JR	4	77	0.01	0.15
W477	CHS48.3*4.0	S235JR	3	996	0.15	4.36
W478	CHS48.3*4.0	S235JR	1	666	0.10	2.91
W516	PL12*65	S355JR	3	190	0.03	1.16
W517	PL12*65	S355JR	1	190	0.03	1.16
W520	PL12*65	S355JR	1	190	0.03	1.16
				Total	4.15	110.57

BOLT LIST:-

BOLT \ STUD	BOLT DESCRIPTION		QTY	FINISH
BOLT	B1N2W 16 X 50	A325M	10	

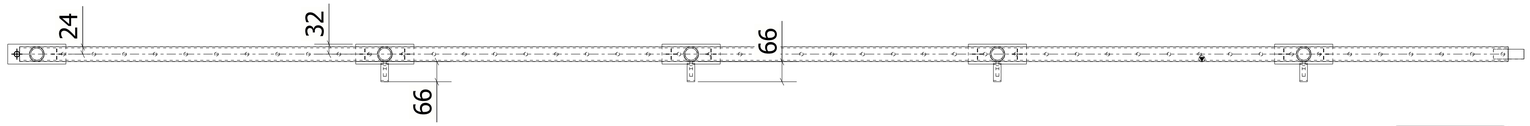

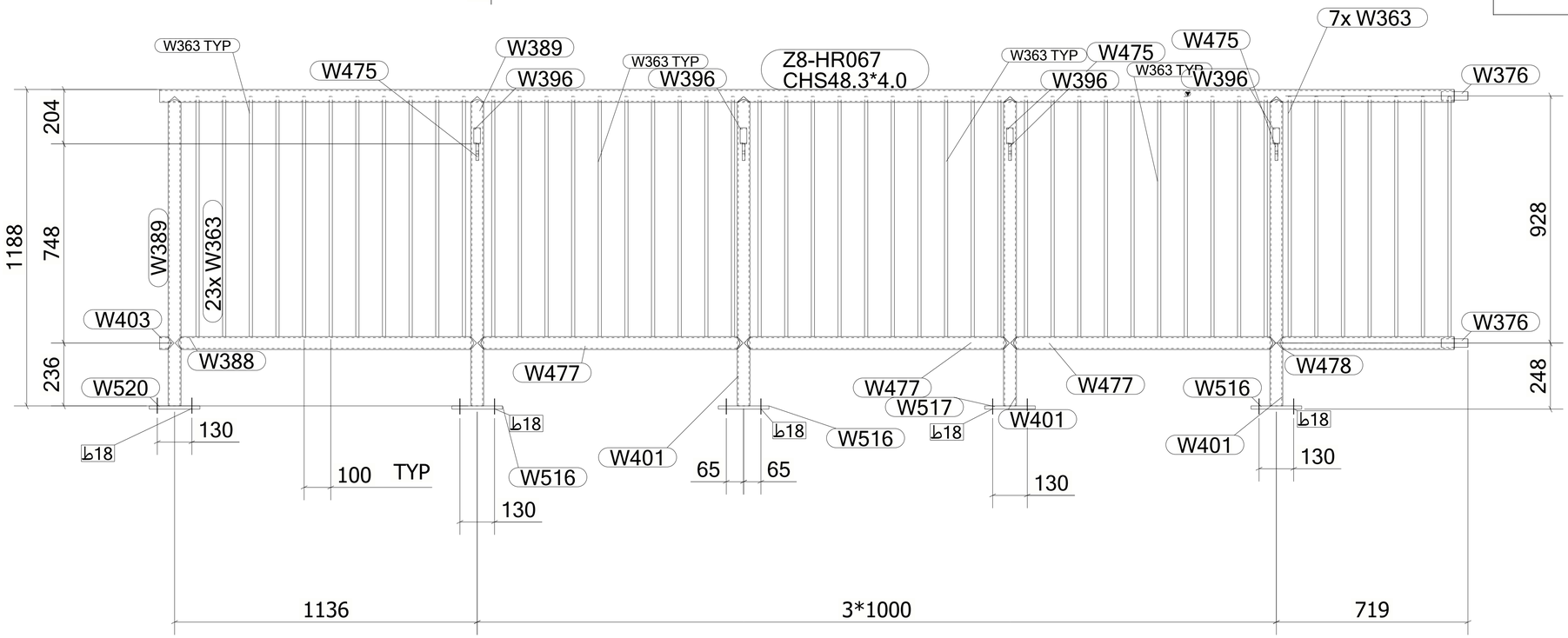

1 *REQUIRED AS DRAWN MARKED* **Z8-HR067**

6 October Monorail
Engineering Unit
Valid For Construction

GENERAL NOTES:

1. THE DIMENSIONS SHOWN ARE NOMINAL (IN MILLIMETERS), U.N.O.
2. WELD SIZESHALL BE AISC MINIMUM OF 6 mm UNLESS NOTED OTHERWISE.
3. ALL FIELD WELDS SHALL BE INSPECTED PER QUALITY ASSURANCE AND SPECIAL INSPECTIONS.

REFERENCE DRAWINGS

1	93M-BOA-NAT-LOT-04833
2	93M-BOA-NAT-LOT-09170
3	93M-BOA-NAT-LOT-01976
4	93M-BOA-NAT-LOT-20021
5	
6	
7	
8	
9	

6TH OF OCTOBER CITY RAIL TRANSIT MONORAIL

The Authority | Consultant: Hill International | Main Contractor: ORASCOM CONSTRUCTION / BOMBARDIER | Structural Designer: INNOVA TRANSPORTATION

KEY PLAN:

SCALE	SHOPDRAWING	DATE
AS SHOWN		12/05/2023

REV	DATE	DSG.	CHK.	APP.	AMENDMENTS	STATUS
B	12/05/2023	M.KH	M.KH	DR.M.M	ISSUED FOR INFORMATION	IFI
A	11/20/2022	M.KH	M.KH	DR.M.M	ISSUED FOR INFORMATION	IFI

DRAWING TITLE
6TH OF OCTOBER MONORAIL
SERVICE WALKWAYS
ZONE (1008)
Z8-HR067

Project Code	Rubric	Initiator	Lot	Ref	Number	Revision
93M	047	6ACC	60DE	PDWG	08308	B

Tekla structures

approval is subject to approval of coordination package between multi-discipline

REVIEWED WITH COMMENT MONORAILS PROJECT

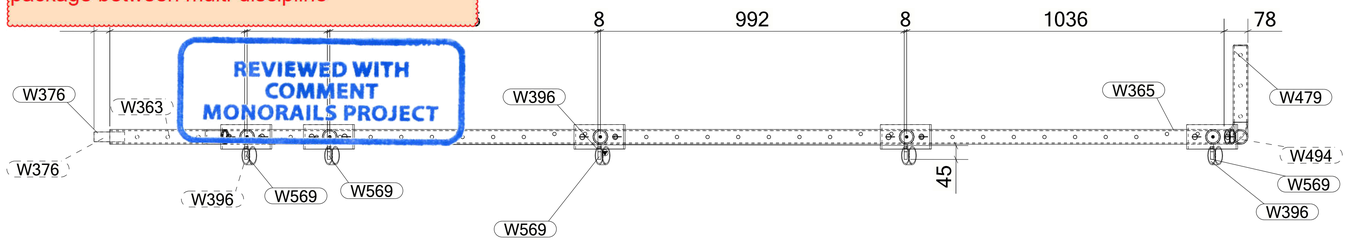

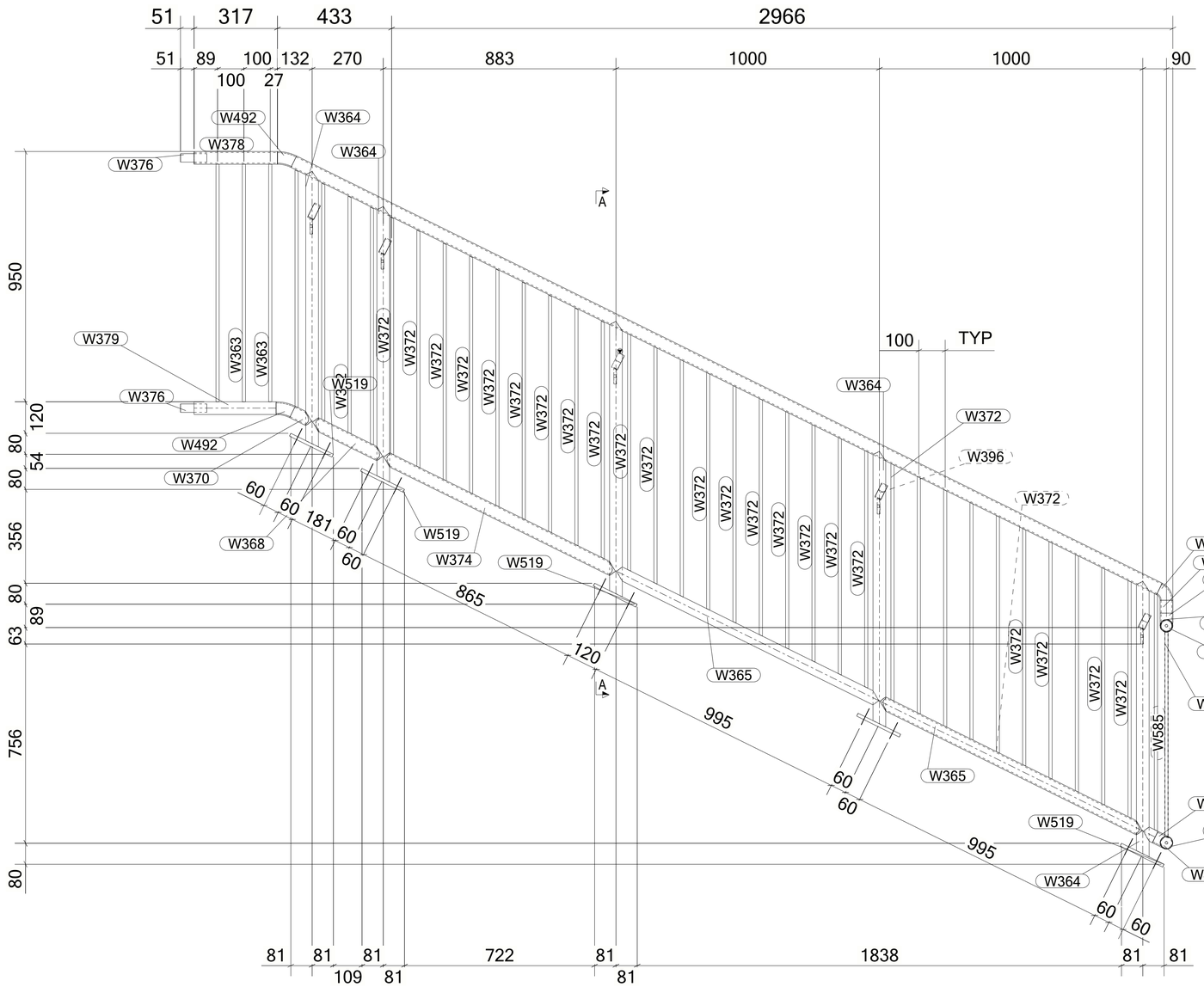

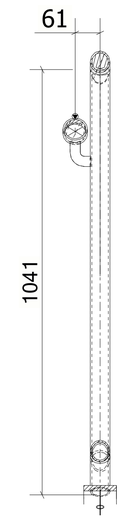

MATERIAL LIST FOR ASSEMBLY MK'D **Z8-HR068**

Mark	Profile	GRADE	No.	Length	Area	Weight
Z8-HR068	CHS48.3*4.0	S235JR	1	3665	0.55	16.02
W363	ROD12	S355JR	3	902	0.03	0.72
W364	CHS48.3*4.0	S235JR	5	1046	0.16	4.58
W365	CHS48.3*4.0	S235JR	2	1111	0.17	4.86
W368	CHS48.3*4.0	S235JR	1	297	0.04	1.30
W370	CHS48.3*4.0	S235JR	1	81	0.01	0.35
W372	ROD12	S355JR	34	902	0.03	0.72
W374	CHS48.3*4.0	S235JR	1	981	0.15	4.29
W376	ROD32	S235JR	2	100	0.01	0.60
W378	CHS48.3*4.0	S235JR	1	317	0.05	1.38
W379	CHS48.3*4.0	S235JR	1	312	0.05	1.36
W396	PIPE2SCH40	S235JR	5	25	0.01	0.14
W479	CHS48.3*4.0	S235JR	2	249	0.04	1.09
W491	CHS48.3*4.0	S235JR	2	75	0.01	0.33
W492	CHS48.3*4.0	S235JR	2	64	0.01	0.28
W494	CHS48.3*4.0	S235JR	1	53	0.01	0.23
W495	PL3*45	S355JR	2	45	0.00	0.03
W519	PL12*80	S355JR	5	180	0.04	1.36
W561	CHS48.3*4.0	S235JR	1	50	0.01	0.22
W569	PL10*25	S355JR	5	79	0.01	0.14
W585	ROD12	S355JR	3	776	0.03	0.62
W598	CHS48.3*4.0	S235JR	1	49	0.01	0.21
				Total	3.68	99.20

BOLT LIST:-

BOLT \ STUD	BOLT DESCRIPTION		QTY	FINISH
BOLT	B1N2W 16 X 60	A325M	10	

1 *REQUIRED AS DRAWN MARKED* **Z8-HR068**

6 October Monorail
Engineering Unit
Valid For Construction

GENERAL NOTES:

1. THE DIMENSIONS SHOWN ARE NOMINAL (IN MILLIMETERS), U.N.O.
2. WELD SIZESHALL BE AISC MINIMUM OF 6 mm UNLESS NOTED OTHERWISE.
3. ALL FIELD WELDS SHALL BE INSPECTED PER QUALITY ASSURANCE AND SPECIAL INSPECTIONS.

REFERENCE DRAWINGS

1	93M-BOA-NAT-LOT-04833
2	93M-BOA-NAT-LOT-09170
3	93M-BOA-NAT-LOT-01976
4	93M-BOA-NAT-LOT-20021
5	
6	
7	
8	
9	

6TH OF OCTOBER CITY RAIL TRANSIT MONORAIL

The Authority | Consultant: Hill International | Main Contractor: ORASCOM CONSTRUCTION / BOMBARDIER | Structural Designer: INNOVA TRANSPORTATION

KEY PLAN:

SCALE: AS SHOWN | SHOPDRAWING | DATE: 12/05/2023

REV	DATE	DSG.	CHK.	APP.	AMENDMENTS	STATUS
B	12/05/2023	MKH	MKH	DRMM	ISSUED FOR INFORMATION	IFI
A	11/20/2022	MKH	MKH	DRMM	ISSUED FOR INFORMATION	IFI

DRAWING TITLE
6TH OF OCTOBER MONORAIL
SERVICE WALKWAYS
ZONE (1008)
Z8-HR068

Project Code	Rubric	Initiator	Lot	Ref	Number	Revision
93M	047	6ACC	60DE	PDWG	08309	B

Tekla structures

approval is subject to approval of coordination package between multi-discipline

REVIEWED WITH COMMENT
MONORAILS PROJECT

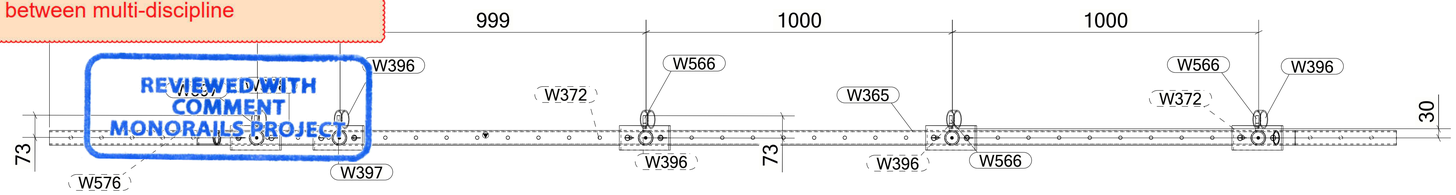

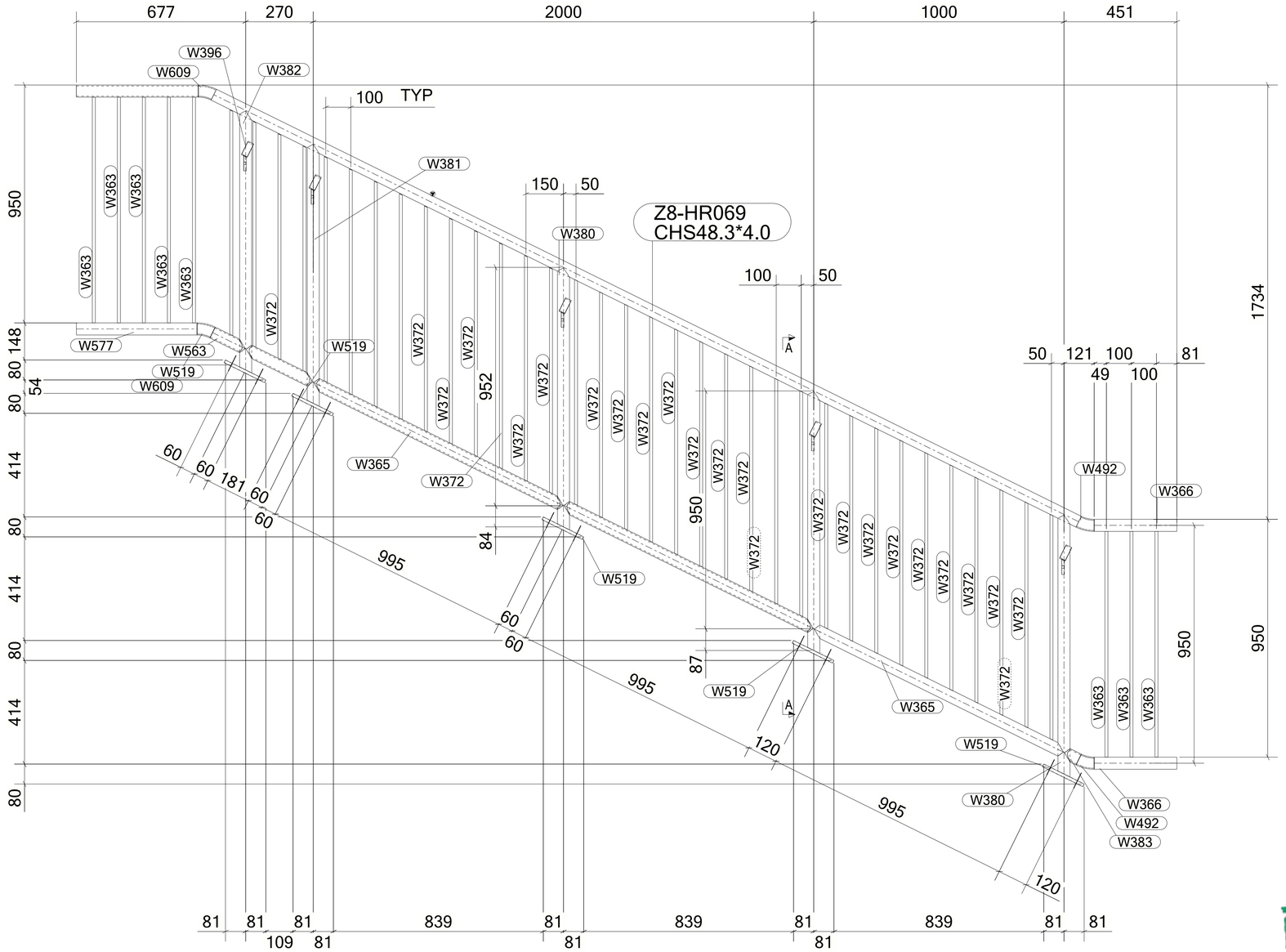

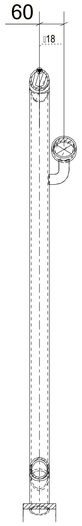

1 *REQUIRED AS DRAWN MARKED* **Z8-HR069**

MATERIAL LIST FOR ASSEMBLY MK'D **Z8-HR069**

Mark	Profile	GRADE	No.	Length	Area	Weight
Z8-HR069	CHS48.3*4.0	S235JR	1	3854	0.58	16.85
W363	ROD12	S355JR	8	902	0.03	0.72
W365	CHS48.3*4.0	S235JR	3	1111	0.17	4.86
W366	CHS48.3*4.0	S235JR	2	330	0.05	1.44
W368	CHS48.3*4.0	S235JR	1	297	0.04	1.30
W372	ROD12	S355JR	34	902	0.03	0.72
W380	CHS48.3*4.0	S235JR	3	1047	0.16	4.58
W381	CHS48.3*4.0	S235JR	1	1047	0.16	4.58
W382	CHS48.3*4.0	S235JR	1	1047	0.16	4.58
W383	CHS48.3*4.0	S235JR	1	63	0.01	0.28
W396	PIPE2SCH40	S235JR	5	25	0.01	0.14
W397	PL10*25	S355JR	2	78	0.01	0.14
W492	CHS48.3*4.0	S235JR	2	64	0.01	0.28
W519	PL12*80	S355JR	5	180	0.04	1.36
W563	CHS48.3*4.0	S235JR	1	145	0.02	0.64
W566	PL10*25	S355JR	3	78	0.01	0.14
W576	CHS48.3*4.0	S235JR	1	487	0.07	2.13
W577	CHS48.3*4.0	S235JR	1	482	0.07	2.11
W609	CHS48.3*4.0	S355-JR	2	64	0.01	0.28
				Total	3.85	103.05

BOLT LIST:-

BOLT \ STUD	BOLT DESCRIPTION		QTY	FINISH
BOLT	B1N2W 16 X 60	A325M	10	

6 October Monorail
Engineering Unit
Valid For Construction

GENERAL NOTES:

1. THE DIMENSIONS SHOWN ARE NOMINAL (IN MILLIMETERS), U.N.O.
2. WELD SIZESHALL BE AISC MINIMUM OF 6 mm UNLESS NOTED OTHERWISE.
3. ALL FIELD WELDS SHALL BE INSPECTED PER QUALITY ASSURANCE AND SPECIAL INSPECTIONS.

REFERENCE DRAWINGS

1	93M-BOA-NAT-LOT-04833
2	93M-BOA-NAT-LOT-09170
3	93M-BOA-NAT-LOT-01976
4	93M-BOA-NAT-LOT-20021
5	
6	
7	
8	
9	

6TH OF OCTOBER CITY RAIL TRANSIT MONORAIL

The Authority | Hill International Consultant | Main Contractor | Structural Designer

KEY PLAN:

SCALE: AS SHOWN | SHOPDRAWING | DATE: 12/05/2023

REV	DATE	DSG.	CHK.	APP.	AMENDMENTS	STATUS
B	12/05/2023	M.KH	M.KH	DR.M.M	ISSUED FOR INFORMATION	IFI
A	11/20/2022	M.KH	M.KH	DR.M.M	ISSUED FOR INFORMATION	IFI

DRAWING TITLE
6TH OF OCTOBER MONORAIL
SERVICE WALKWAYS
ZONE (1008)
Z8-HR069

Project Code	Rubric	Initiator	Lot	Ref	Number	Revision
93M	047	6ACC	60DE	PDWG	0831	B

Tekla structures

approval is subject to approval of coordination package between multi-discipline

REVIEWED WITH COMMENT
MONORAILS PROJECT

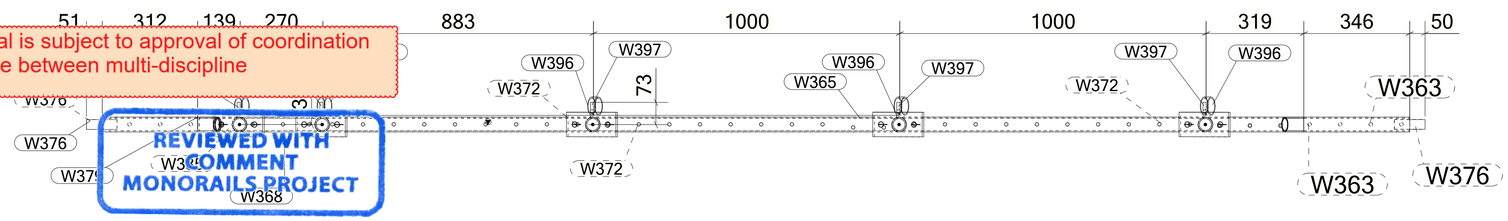

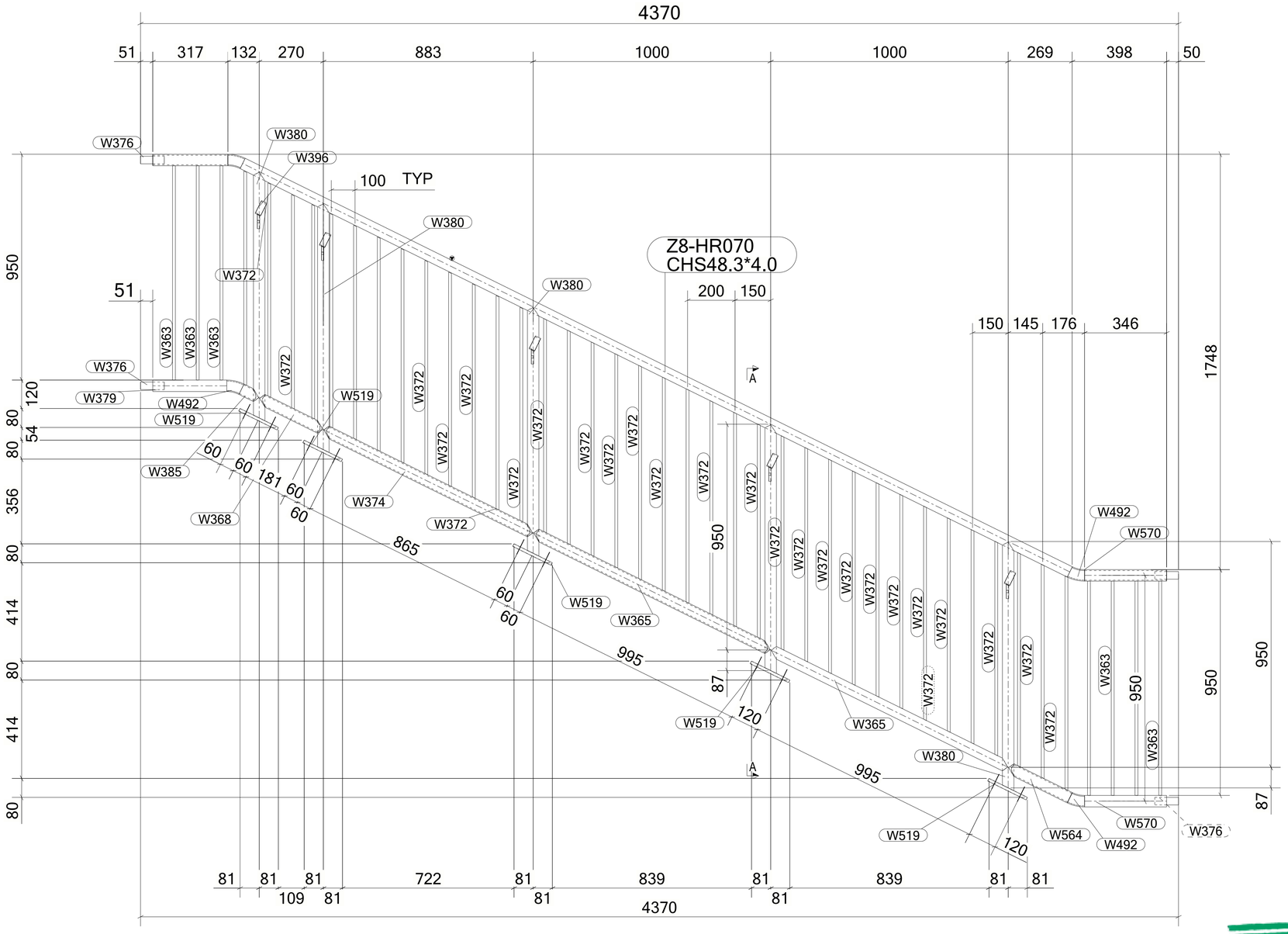

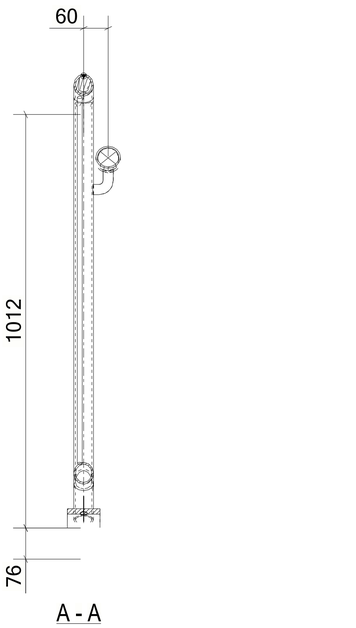

MATERIAL LIST FOR ASSEMBLY MK'D **Z8-HR070**

Mark	Profile	GRADE	No.	Length	Area	Weight
Z8-HR070	CHS48.3*4.0	S235JR	1	3883	0.58	16.98
W363	ROD12	S355JR	7	902	0.03	0.72
W365	CHS48.3*4.0	S235JR	2	1111	0.17	4.86
W368	CHS48.3*4.0	S235JR	1	297	0.04	1.30
W372	ROD12	S355JR	36	902	0.03	0.72
W374	CHS48.3*4.0	S235JR	1	981	0.15	4.29
W376	ROD32	S235JR	4	100	0.01	0.60
W378	CHS48.3*4.0	S235JR	1	317	0.05	1.38
W379	CHS48.3*4.0	S235JR	1	312	0.05	1.36
W380	CHS48.3*4.0	S235JR	5	1046	0.16	4.58
W385	CHS48.3*4.0	S235JR	1	81	0.01	0.35
W396	PIPE2SCH40	S235JR	5	25	0.01	0.14
W397	PL10*25	S355JR	5	78	0.01	0.14
W492	CHS48.3*4.0	S235JR	4	64	0.01	0.28
W519	PL12*80	S355JR	5	180	0.04	1.36
W564	CHS48.3*4.0	S235JR	1	287	0.04	1.26
W570	CHS48.3*4.0	S235JR	2	346	0.05	1.51
				Total	3.89	105.07

BOLT LIST:-

BOLT \ STUD	BOLT DESCRIPTION	QTY	FINISH
BOLT	B1N2W 16 X 60 A325M	10	

1 *REQUIRED AS DRAWN MARKED* **Z8-HR070**

GENERAL NOTES:

1. THE DIMENSIONS SHOWN ARE NOMINAL (IN MILLIMETERS), U.N.O.
2. WELD SIZESHALL BE AISC MINIMUM OF 6 mm UNLESS NOTED OTHERWISE.
3. ALL FIELD WELDS SHALL BE INSPECTED PER QUALITY ASSURANCE AND SPECIAL INSPECTIONS.

REFERENCE DRAWINGS

1	93M-BOA-NAT-LOT-04833
2	93M-BOA-NAT-LOT-09170
3	93M-BOA-NAT-LOT-01976
4	93M-BOA-NAT-LOT-20021
5	
6	
7	
8	
9	

6TH OF OCTOBER CITY RAIL TRANSIT MONORAIL

The Authority | Consultant: Hill International | Main Contractor: ORASCOM CONSTRUCTION / BOMBARDIER | Structural Designer: INNOVA TRANSPORTATION

KEY PLAN:

6 October Monorail
Engineering Unit
Valid For Construction

SCALE	SHOPDRAWING	DATE
AS SHOWN		12/05/2023

REV	DATE	DSG.	CHK.	APP.	AMENDMENTS	STATUS
B	12/05/2023	M.KH	M.KH	DR.M.M	ISSUED FOR INFORMATION	IFI
A	11/20/2022	M.KH	M.KH	DR.M.M	ISSUED FOR INFORMATION	IFI

DRAWING TITLE
6TH OF OCTOBER MONORAIL
SERVICE WALKWAYS
ZONE (1008)
Z8-HR070

Project Code	Rubric	Initiator	Lot	Ref	Number	Revision
93M	047	6ACC	60DE	PDWG	0831	B

Tekla structures

approval is subject to approval of coordination package between multi-discipline

REVIEWED WITH COMMENT MONORAILS PROJECT

MATERIAL LIST FOR ASSEMBLY MK'D **Z8-HR071**

Mark	Profile	GRADE	No.	Length	Area	Weight
Z8-HR071	CHS48.3*4.0	S235JR	1	3883	0.58	16.98
W376	ROD32	S235JR	1	100	0.01	0.60
W378	CHS48.3*4.0	S235JR	1	317	0.05	1.38
W492	CHS48.3*4.0	S235JR	2	64	0.01	0.28
W570	CHS48.3*4.0	S235JR	1	346	0.05	1.51
				Total	0.71	21.04

BOLT LIST:-

BOLT \ STUD	BOLT DESCRIPTION	QTY	FINISH

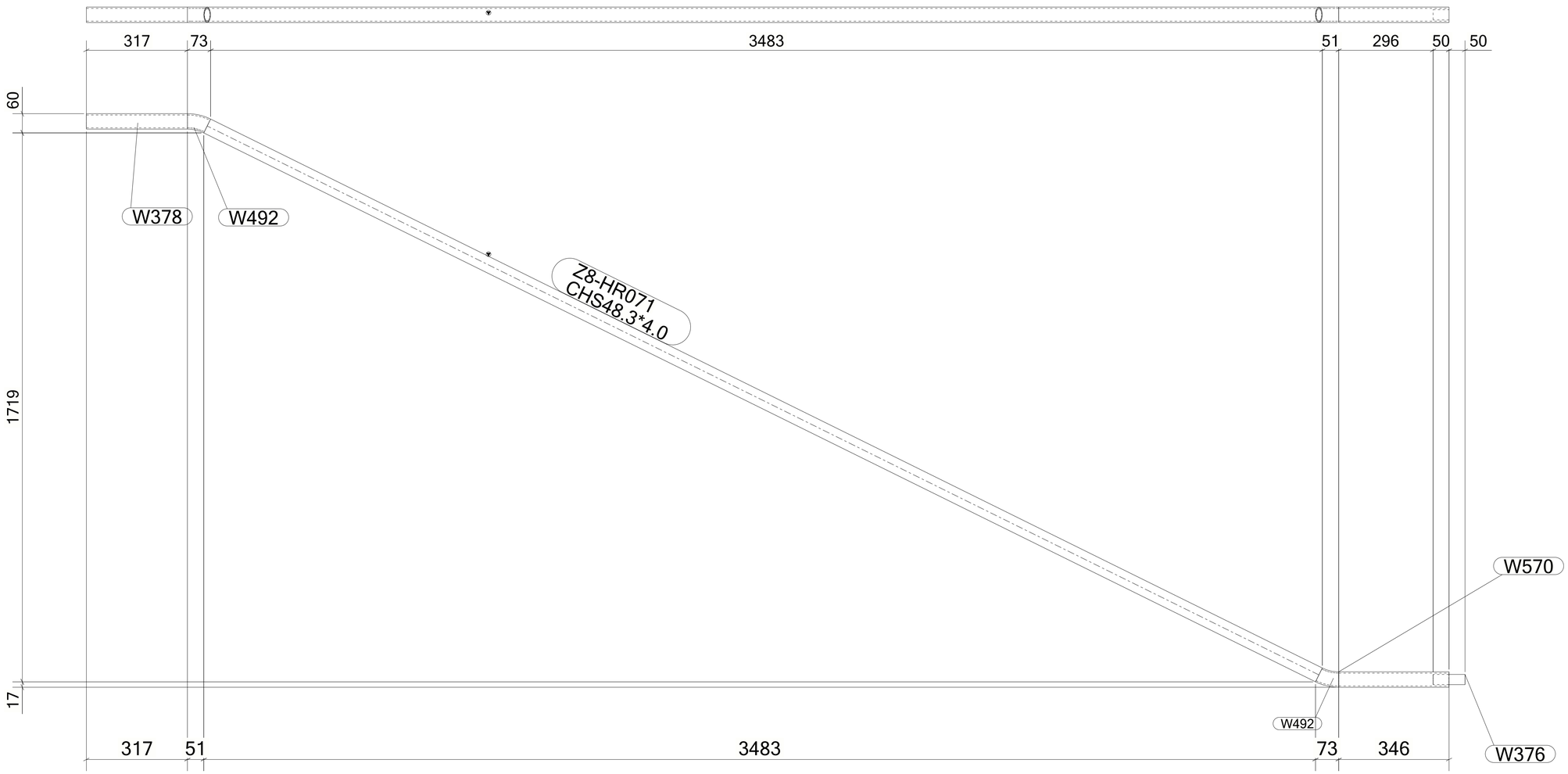

1 *REQUIRED AS DRAWN MARKED* **Z8-HR071**

6 October Monorail Engineering Unit
Valid For Construction

GENERAL NOTES:

1. THE DIMENSIONS SHOWN ARE NOMINAL (IN MILLIMETERS), U.N.O.
2. WELD SIZESHALL BE AISC MINIMUM OF 6 mm UNLESS NOTED OTHERWISE.
3. ALL FIELD WELDS SHALL BE INSPECTED PER QUALITY ASSURANCE AND SPECIAL INSPECTIONS.

REFERENCE DRAWINGS

1	93M-BOA-NAT-LOT-04833
2	93M-BOA-NAT-LOT-09170
3	93M-BOA-NAT-LOT-01976
4	93M-BOA-NAT-LOT-20021
5	
6	
7	
8	
9	

6TH OF OCTOBER CITY RAIL TRANSIT MONORAIL

The Authority | Hill International Consultant | ORASCOM BOMBARDIER Main Contractor | INNOVA Structural Designer

KEY PLAN:

SCALE	SHOPDRAWING	DATE
AS SHOWN		12/05/2023

REV	DATE	DSG.	CHK.	APP.	AMENDMENTS	STATUS
B	12/05/2023	M.KH	M.KH	DR.M.M	ISSUED FOR INFORMATION	IFI
A	11/20/2022	M.KH	M.KH	DR.M.M	ISSUED FOR INFORMATION	IFI

DRAWING TITLE
6TH OF OCTOBER MONORAIL SERVICE WALKWAYS ZONE (1008)
Z8-HR071

Project Code	Rubric	Initiator	Lot	Ref	Number	Revision
93M	0476	ACC	60DEP	DWG	08312	B

Tekla structures

approval is subject to approval of coordination package between multi-discipline

REVIEWED WITH COMMENT
MONORAILS PROJECT

MATERIAL LIST FOR ASSEMBLY MK'D **Z8-HR072**

Mark	Profile	GRADE	No.	Length	Area	Weight
Z8-HR072	CHS48.3*4.0	S235JR	1	3858	0.58	16.87
W366	CHS48.3*4.0	S235JR	1	330	0.05	1.44
W492	CHS48.3*4.0	S235JR	1	64	0.01	0.28
W577	CHS48.3*4.0	S235JR	1	482	0.07	2.11
W609	CHS48.3*4.0	S355-JR	1	64	0.01	0.28
				Total	0.72	20.98

BOLT LIST:-

BOLT \ STUD	BOLT DESCRIPTION	QTY	FINISH

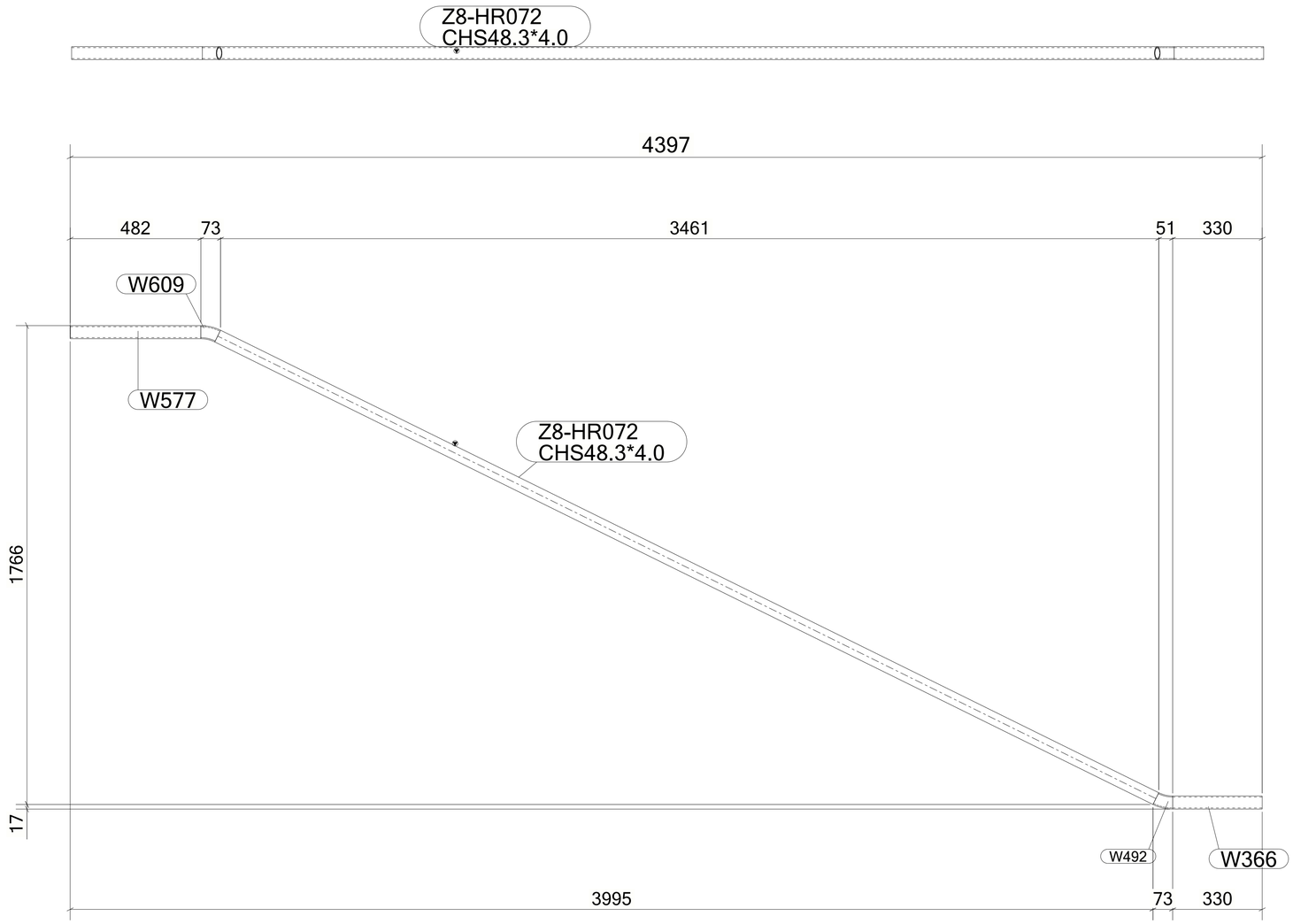

1 *REQUIRED AS DRAWN MARKED* **Z8-HR072**

GENERAL NOTES:

1. THE DIMENSIONS SHOWN ARE NOMINAL (IN MILLIMETERS), U.N.O.
2. WELD SIZESHALL BE AISC MINIMUM OF 6 mm UNLESS NOTED OTHERWISE.
3. ALL FIELD WELDS SHALL BE INSPECTED PER QUALITY ASSURANCE AND SPECIAL INSPECTIONS.

REFERENCE DRAWINGS

1	93M-BOA-NAT-LOT-04833
2	93M-BOA-NAT-LOT-09170
3	93M-BOA-NAT-LOT-01976
4	93M-BOA-NAT-LOT-20021
5	
6	
7	
8	
9	

6TH OF OCTOBER CITY RAIL TRANSIT MONORAIL

The Authority | Hill International Consultant | Main Contractor | Structural Designer

KEY PLAN:

6 October Monorail
Engineering Unit
Valid For Construction

SCALE	SHOPDRAWING	DATE
AS SHOWN		12/05/2023

REV	DATE	DSG.	CHK.	APP.	AMENDMENTS	STATUS
B	12/05/2023	M.KH	M.KH	DR.M.M	ISSUED FOR INFORMATION	IFI
A	11/20/2022	M.KH	M.KH	DR.M.M	ISSUED FOR INFORMATION	IFI

DRAWING TITLE
6TH OF OCTOBER MONORAIL
SERVICE WALKWAYS
ZONE (1008)
Z8-HR072

Project Code	Rubric	Initiator	Lot	Ref	Number	Revision
9 3 M 0 4 7 6	A C C	6 0 D E P	D W G	0 8 3 1 3		B

Tekla structures

approval is subject to approval of coordination package between multi-discipline

REVIEWED WITH COMMENT
MONORAILS PROJECT

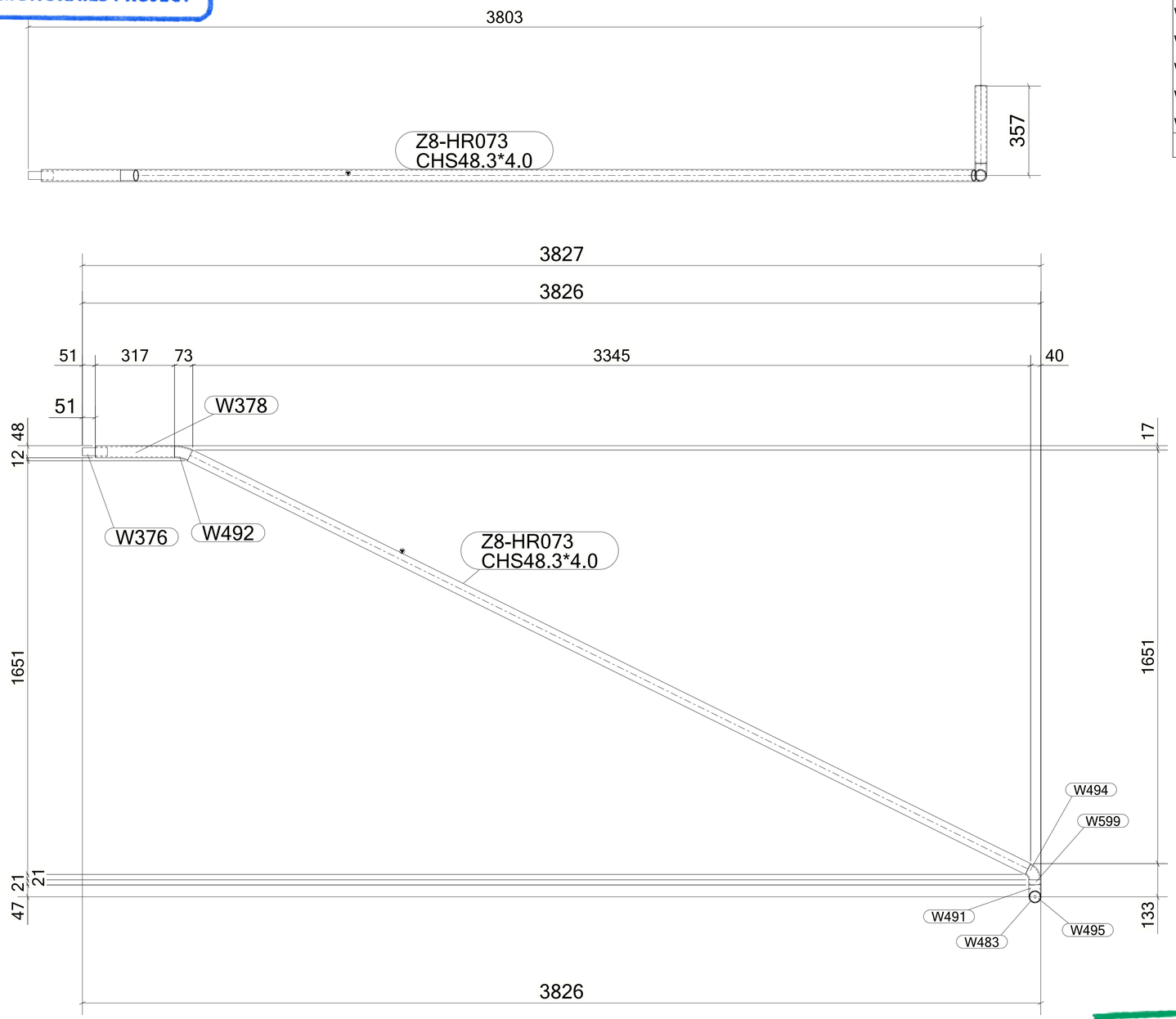

MATERIAL LIST FOR ASSEMBLY MK'D **Z8-HR073**

Mark	Profile	GRADE	No.	Length	Area	Weight
Z8-HR073	CHS48.3*4.0	S235JR	1	3730	0.56	16.31
W376	ROD32	S235JR	1	100	0.01	0.60
W378	CHS48.3*4.0	S235JR	1	317	0.05	1.38
W483	CHS48.3*4.0	S235JR	1	309	0.05	1.35
W491	CHS48.3*4.0	S235JR	1	75	0.01	0.33
W492	CHS48.3*4.0	S235JR	1	64	0.01	0.28
W494	CHS48.3*4.0	S235JR	1	53	0.01	0.23
W495	PL3*45	S355JR	1	45	0.00	0.03
W599	CHS48.3*4.0	S235JR	1	20	0.00	0.09
				Total	0.70	20.61

BOLT LIST:-

BOLT \ STUD	BOLT DESCRIPTION	QTY	FINISH

1 *REQUIRED AS DRAWN MARKED* **Z8-HR073**

GENERAL NOTES:

1. THE DIMENSIONS SHOWN ARE NOMINAL (IN MILLIMETERS), U.N.O.
2. WELD SIZESHALL BE AISC MINIMUM OF 6 mm UNLESS NOTED OTHERWISE.
3. ALL FIELD WELDS SHALL BE INSPECTED PER QUALITY ASSURANCE AND SPECIAL INSPECTIONS.

REFERENCE DRAWINGS

1	93M-BOA-NAT-LOT-04833
2	93M-BOA-NAT-LOT-09170
3	93M-BOA-NAT-LOT-01976
4	93M-BOA-NAT-LOT-20021
5	
6	
7	
8	
9	

6TH OF OCTOBER CITY RAIL TRANSIT MONORAIL

The Authority | Hill International Consultant | Main Contractor | Structural Designer

KEY PLAN:

6 October Monorail
Engineering Unit
Valid For Construction

SCALE	SHOPDRAWING	DATE
AS SHOWN		12/05/2023

REV	DATE	DSG.	CHK.	APP.	AMENDMENTS	STATUS
B	12/05/2023	M.KH	M.KH	DR.M.M	ISSUED FOR INFORMATION	IFI
A	11/20/2022	M.KH	M.KH	DR.M.M	ISSUED FOR INFORMATION	IFI

DRAWING TITLE
6TH OF OCTOBER MONORAIL
SERVICE WALKWAYS
ZONE (1008)
Z8-HR073

Project Code	Rubric	Initiator	Lot	Ref	Number	Revision
93M	047	6ACC	60DEP	DWG	08314	B

Tekla structures

approval is subject to approval of coordination package between multi-discipline

REVIEWED WITH COMMENT
MONORAILS PROJECT

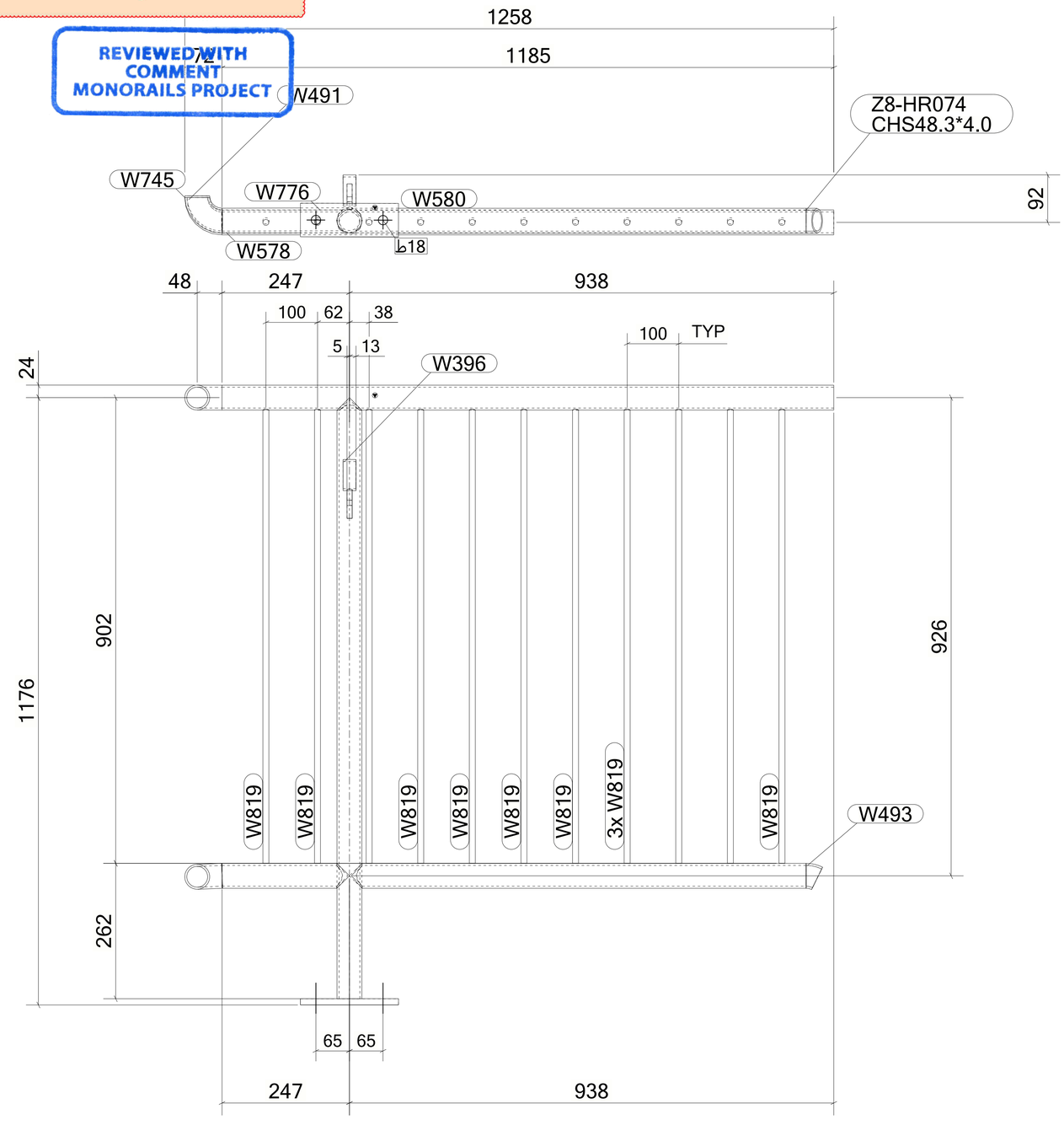

1 *REQUIRED AS DRAWN MARKED* **Z8-HR074**

MATERIAL LIST FOR ASSEMBLY MK'D **Z8-HR074**

Mark	Profile	GRADE	No.	Length	Area	Weight
Z8-HR074	CHS48.3*4.0	S235JR	1	1185	0.18	5.18
W396	PIPE2SCH40	S235JR	1	25	0.01	0.14
W491	CHS48.3*4.0	S235JR	1	76	0.01	0.33
W493	CHS48.3*4.0	S235JR	1	22	0.00	0.10
W578	CHS48.3*4.0	S235JR	1	247	0.04	1.08
W579	CHS48.3*4.0	S235JR	1	1164	0.17	5.09
W580	CHS48.3*4.0	S235JR	1	885	0.13	3.87
W581	PL10*25	S355JR	1	72	0.01	0.13
W745	CHS48.3*4.0	S235JR	1	75	0.01	0.33
W776	PL12*65	S355JR	1	190	0.03	1.16
W819	ROD12	S355JR	11	879	0.03	0.70
				Total	0.95	25.13

BOLT LIST:-

BOLT \ STUD	BOLT DESCRIPTION	QTY	FINISH
BOLT	B1N2W 16 X 50 A325M	2	

GENERAL NOTES:

1. THE DIMENSIONS SHOWN ARE NOMINAL (IN MILLIMETERS), U.N.O.
2. WELD SIZESHALL BE AISC MINIMUM OF 6 mm UNLESS NOTED OTHERWISE.
3. ALL FIELD WELDS SHALL BE INSPECTED PER QUALITY ASSURANCE AND SPECIAL INSPECTIONS.

REFERENCE DRAWINGS

1	93M-BOA-NAT-LOT-04833
2	93M-BOA-NAT-LOT-09170
3	93M-BOA-NAT-LOT-01976
4	93M-BOA-NAT-LOT-20021
5	
6	
7	
8	
9	

6TH OF OCTOBER CITY RAIL TRANSIT MONORAIL

The Authority | Consultant: Hill International | Main Contractor: ORASCOM CONSTRUCTION / BOMBARDIER | Structural Designer: INNOVA

KEY PLAN:

6 October Monorail
Engineering Unit
Valid For Construction

REV	DATE	DSG.	CHK.	APP.	AMENDMENTS	STATUS
B	12/05/2023	M.KH	M.KH	DR.M.M	ISSUED FOR INFORMATION	IFI
A	11/20/2022	M.KH	M.KH	DR.M.M	ISSUED FOR INFORMATION	IFI

SCALE: AS SHOWN | SHOPDRAWING | DATE: 12/05/2023

DRAWING TITLE
6TH OF OCTOBER MONORAIL SERVICE WALKWAYS ZONE (1008)
Z8-HR074

Project Code	Rubric	Initiator	Lot	Ref	Number	Revision
93	M04	76	ACC60	DEP	DWG	08315	B

Tekla structures

approval is subject to approval of coordination package between multi-discipline

REVIEWED WITH COMMENT
MONORAILS PROJECT

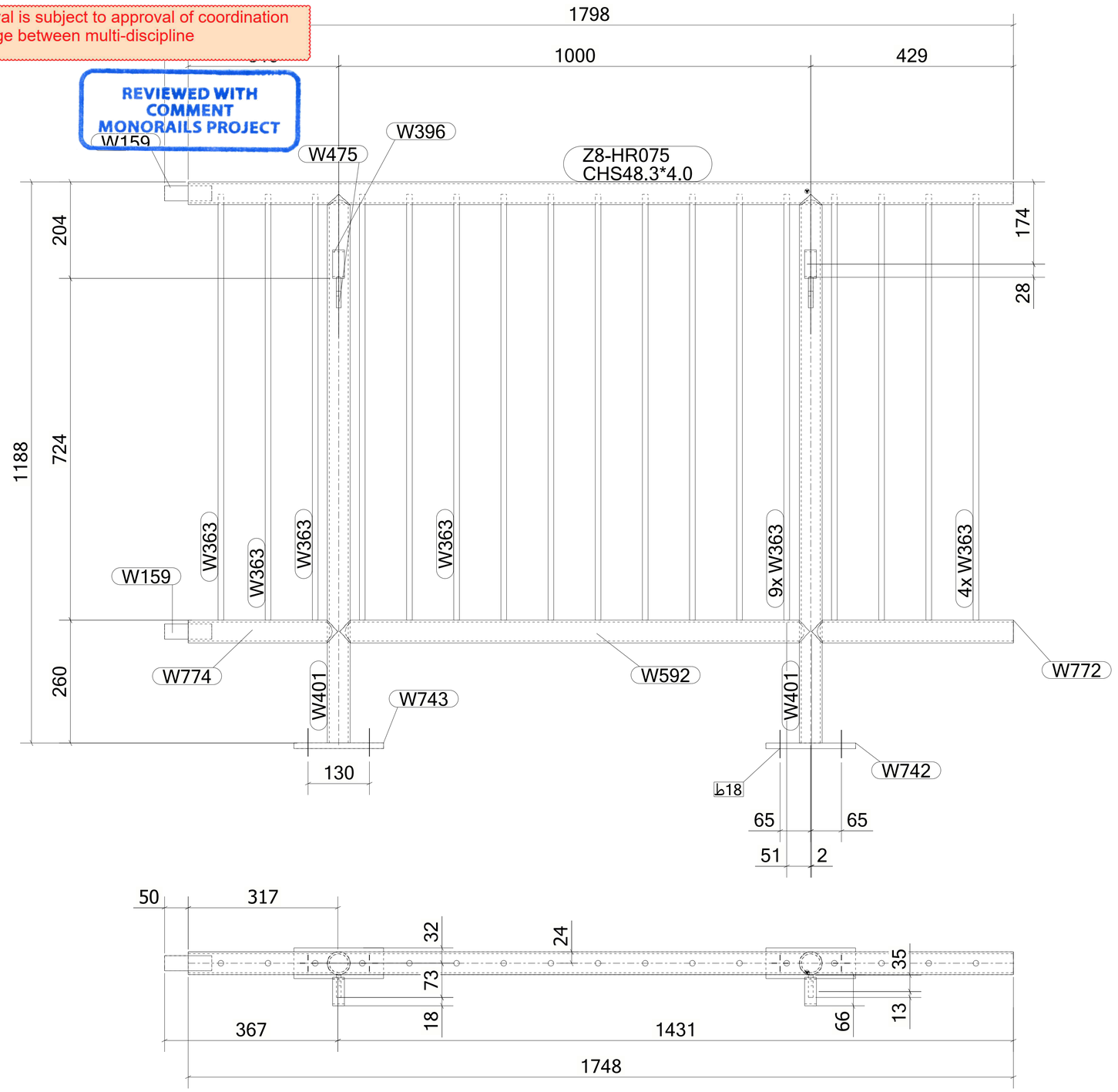

MATERIAL LIST FOR ASSEMBLY MK'D **Z8-HR075**

Mark	Profile	GRADE	No.	Length	Area	Weight
Z8-HR075	CHS48.3*4.0	S235JR	1	1748	0.26	7.64
W159	ROD32	S235JR	2	100	0.01	0.60
W363	ROD12	S355JR	17	902	0.03	0.72
W396	PIPE2SCH40	S235JR	2	25	0.01	0.14
W401	CHS48.3*4.0	S235JR	2	1162	0.17	5.08
W475	PL10*25	S355JR	2	77	0.01	0.15
W592	CHS48.3*4.0	S235JR	1	996	0.15	4.36
W742	PL12*65	S355JR	1	190	0.03	1.16
W743	PL12*65	S355JR	1	190	0.03	1.16
W772	CHS48.3*4.0	S235JR	1	428	0.06	1.87
W774	CHS48.3*4.0	S235JR	1	317	0.05	1.39
				Total	1.55	41.77

BOLT LIST:-

BOLT \ STUD	BOLT DESCRIPTION		QTY	FINISH
BOLT	B1N2W 16 X 50	A325M	4	

1 *REQUIRED AS DRAWN MARKED* **Z8-HR075**

GENERAL NOTES:

1. THE DIMENSIONS SHOWN ARE NOMINAL (IN MILLIMETERS), U.N.O.
2. WELD SIZESHALL BE AISC MINIMUM OF 6 mm UNLESS NOTED OTHERWISE.
3. ALL FIELD WELDS SHALL BE INSPECTED PER QUALITY ASSURANCE AND SPECIAL INSPECTIONS.

REFERENCE DRAWINGS

1	93M-BOA-NAT-LOT-04833
2	93M-BOA-NAT-LOT-09170
3	93M-BOA-NAT-LOT-01976
4	93M-BOA-NAT-LOT-20021
5	
6	
7	
8	
9	

6TH OF OCTOBER CITY RAIL TRANSIT MONORAIL

The Authority | Consultant: Hill International | Main Contractor: ORASCOM CONSTRUCTION / BOMBARDIER | Structural Designer: INNOVA TRANSPORTATION

KEY PLAN:

6 October Monorail
Engineering Unit
Valid For Construction

SCALE	SHOPDRAWING	DATE
AS SHOWN		12/05/2023

REV	DATE	DSG.	CHK.	APP.	AMENDMENTS	STATUS
B	12/05/2023	M.KH	M.KH	DR.M.M	ISSUED FOR INFORMATION	IFI
A	11/20/2022	M.KH	M.KH	DR.M.M	ISSUED FOR INFORMATION	IFI

DRAWING TITLE
6TH OF OCTOBER MONORAIL
SERVICE WALKWAYS
ZONE (1008)
Z8-HR075

Project Code	Rubric	Initiator	Lot	Ref	Number	Revision
93M047	6ACC60	DEP	DWG	0831	6	B

Tekla structures

approval is subject to approval of coordination package between multi-discipline

REVIEWED WITH COMMENT
MONORAILS PROJECT

MATERIAL LIST FOR ASSEMBLY MK'D **Z8-HR076**

Mark	Profile	GRADE	No.	Length	Area	Weight
Z8-HR076	CHS48.3*4.0	S235JR	1	1751	0.26	7.66
W159	ROD32	S235JR	1	100	0.01	0.60
				Total	0.27	8.26

BOLT LIST:-

BOLT \ STUD	BOLT DESCRIPTION	QTY	FINISH

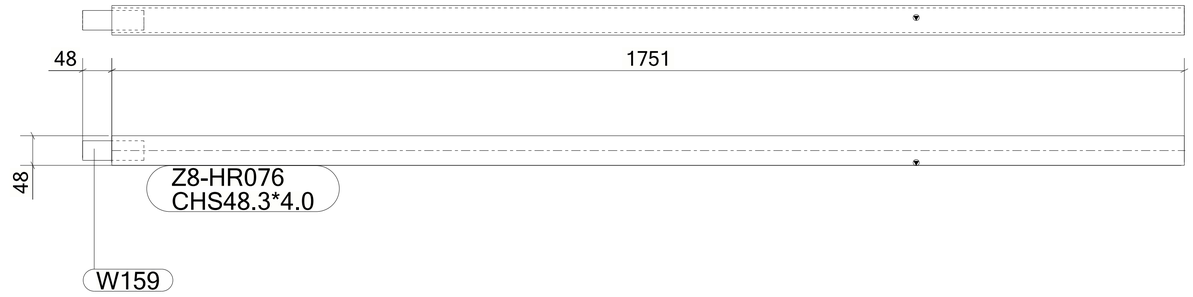

1 *REQUIRED AS DRAWN MARKED* **Z8-HR076**

6 October Monorail
Engineering Unit
Valid For Construction

GENERAL NOTES:

1. THE DIMENSIONS SHOWN ARE NOMINAL (IN MILLIMETERS), U.N.O.
2. WELD SIZESHALL BE AISC MINIMUM OF 6 mm UNLESS NOTED OTHERWISE.
3. ALL FIELD WELDS SHALL BE INSPECTED PER QUALITY ASSURANCE AND SPECIAL INSPECTIONS.

REFERENCE DRAWINGS

1	93M-BOA-NAT-LOT-04833
2	93M-BOA-NAT-LOT-09170
3	93M-BOA-NAT-LOT-01976
4	93M-BOA-NAT-LOT-20021
5	
6	
7	
8	
9	

6TH OF OCTOBER CITY RAIL TRANSIT MONORAIL

The Authority — Hill International Consultant — Main Contractor — Structural Designer

KEY PLAN:

SCALE	SHOPDRAWING	DATE
AS SHOWN		12/05/2023

REV	DATE	DSG.	CHK.	APP.	AMENDMENTS	STATUS
B	12/05/2023	M.KH	M.KH	DR.M.M	ISSUED FOR INFORMATION	IFI
A	11/20/2022	M.KH	M.KH	DR.M.M	ISSUED FOR INFORMATION	IFI

DRAWING TITLE
6TH OF OCTOBER MONORAIL
SERVICE WALKWAYS
ZONE (1008)
Z8-HR076

Project Code	Rubric	Initiator	Lot	Ref	Number	Revision
93M	047	6ACC	60DEP	DWG	0831	7 B

Tekla structures

approval is subject to approval of coordination package between multi-discipline

REVIEWED WITH COMMENT
MONORAILS PROJECT

MATERIAL LIST FOR ASSEMBLY MK'D **Z8-HR077**

Mark	Profile	GRADE	No.	Length	Area	Weight
Z8-HR077	CHS48.3*4.0	S235JR	1	5596	0.84	24.47
W363	ROD12	S355JR	56	902	0.03	0.72
W389	CHS48.3*4.0	S235JR	6	1162	0.17	5.08
W396	PIPE2SCH40	S235JR	6	25	0.01	0.14
W473	CHS48.3*4.0	S235JR	5	996	0.15	4.36
W475	PL10*25	S355JR	6	78	0.01	0.15
W514	CHS48.3*4.0	S235JR	2	90	0.01	0.39
W516	PL12*65	S355JR	1	190	0.03	1.16
W517	PL12*65	S355JR	2	190	0.03	1.16
W596	CHS48.3*4.0	S235JR	1	286	0.04	1.25
W597	CHS48.3*4.0	S235JR	1	306	0.05	1.34
W611	PL12*65	S355JR	3	190	0.03	1.16
W614	CHS48.3*4.0	S235JR	2	90	0.01	0.39
				Total	4.89	129.94

BOLT LIST:-

BOLT \ STUD	BOLT DESCRIPTION		QTY	FINISH
BOLT	B1N2W 16 X 50	A325M	12	

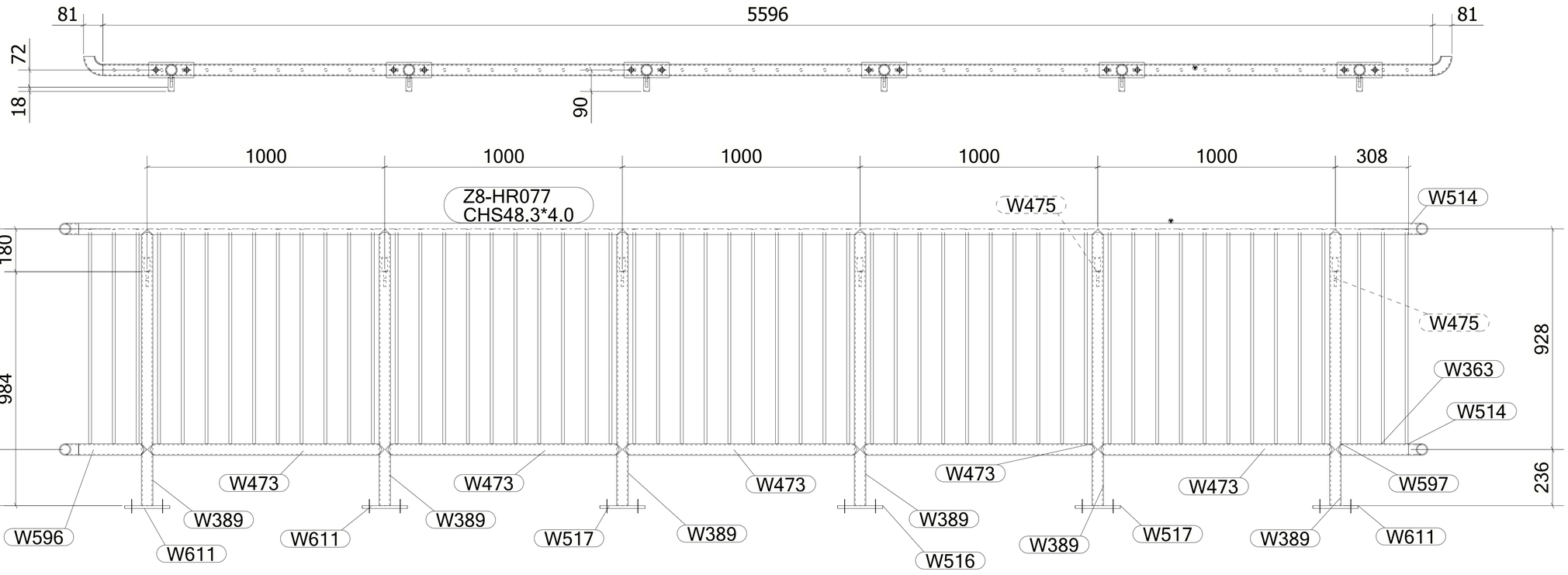

1 *REQUIRED AS DRAWN MARKED* **Z8-HR077**

6 October: Monorail
Engineering Unit
Valid For Construction

GENERAL NOTES:

1. THE DIMENSIONS SHOWN ARE NOMINAL (IN MILLIMETERS), U.N.O.
2. WELD SIZESHALL BE AISC MINIMUM OF 6 mm UNLESS NOTED OTHERWISE.
3. ALL FIELD WELDS SHALL BE INSPECTED PER QUALITY ASSURANCE AND SPECIAL INSPECTIONS.

REFERENCE DRAWINGS

1	93M-BOA-NAT-LOT-04833
2	93M-BOA-NAT-LOT-09170
3	93M-BOA-NAT-LOT-01976
4	93M-BOA-NAT-LOT-20021
5	
6	
7	
8	
9	

6TH OF OCTOBER CITY RAIL TRANSIT MONORAIL

The Authority — Consultant — Main Contractor — Structural Designer

KEY PLAN:

REV	DATE	DSG.	CHK.	APP.	AMENDMENTS	STATUS
B	12/05/2023	M.KH	M.KH	DR.M.M	ISSUED FOR INFORMATION	IFI
A	11/20/2022	M.KH	M.KH	DR.M.M	ISSUED FOR INFORMATION	IFI

SCALE: AS SHOWN | SHOPDRAWING | DATE: 12/05/2023

DRAWING TITLE
6TH OF OCTOBER MONORAIL
SERVICE WALKWAYS
ZONE (1008)
Z8-HR077

Project Code	Rubric	Initiator	Lot	Ref	Number	Revision
93M	047	6ACC	60DE	PDWG	0831	8 B

Tekla structures

approval is subject to approval of coordination package between multi-discipline

REVIEWED WITH COMMENT
MONORAILS PROJECT

MATERIAL LIST FOR ASSEMBLY MK'D **Z8-HR078**

Mark	Profile	GRADE	No.	Length	Area	Weight
Z8-HR078	CHS48.3*4.0	S235JR	1	5720	0.86	25.01
W514	CHS48.3*4.0	S235JR	1	90	0.01	0.39
W614	CHS48.3*4.0	S235JR	1	90	0.01	0.39
				Total	0.88	25.79

BOLT LIST:-

BOLT \ STUD	BOLT DESCRIPTION	QTY	FINISH

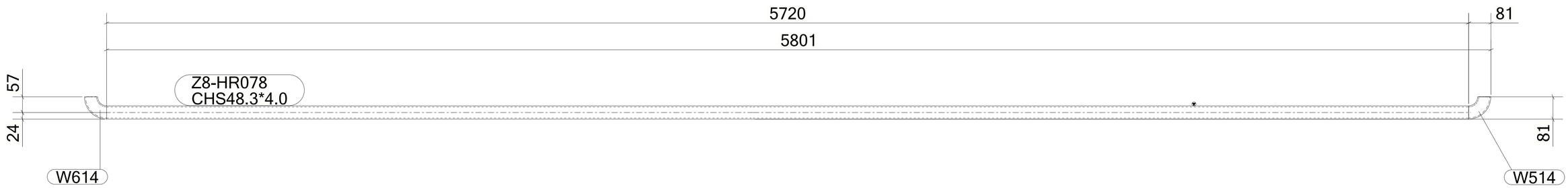

1 *REQUIRED AS DRAWN MARKED* **Z8-HR078**

GENERAL NOTES:

1. THE DIMENSIONS SHOWN ARE NOMINAL (IN MILLIMETERS), U.N.O.
2. WELD SIZESHALL BE AISC MINIMUM OF 6 mm UNLESS NOTED OTHERWISE.
3. ALL FIELD WELDS SHALL BE INSPECTED PER QUALITY ASSURANCE AND SPECIAL INSPECTIONS.

REFERENCE DRAWINGS

1	93M-BOA-NAT-LOT-04833
2	93M-BOA-NAT-LOT-09170
3	93M-BOA-NAT-LOT-01976
4	93M-BOA-NAT-LOT-20021
5	
6	
7	
8	
9	

6TH OF OCTOBER CITY RAIL TRANSIT MONORAIL

The Authority | Consultant: Hill International | Main Contractor: ORASCOM CONSTRUCTION / BOMBARDIER | Structural Designer: INNOVA TRANSPORTATION

KEY PLAN:

6 October Monorail
Engineering Unit
Valid For Construction

SCALE	SHOPDRAWING	DATE
AS SHOWN		12/05/2023

REV	DATE	DSG.	CHK.	APP.	AMENDMENTS	STATUS
B	12/05/2023	M.KH	M.KH	DR.M.M	ISSUED FOR INFORMATION	IFI
A	11/20/2022	M.KH	M.KH	DR.M.M	ISSUED FOR INFORMATION	IFI

DRAWING TITLE
6TH OF OCTOBER MONORAIL
SERVICE WALKWAYS
ZONE (1008)
Z8-HR078

Project Code	Rubric	Initiator	Lot	Ref	Number	Revision
9 3 M 0 4 7 6	A C C	6 0 D E P	D W G	0 8 3 1 9		B

Tekla structures

approval is subject to approval of coordination package between multi-discipline

REVIEWED WITH COMMENT
MONORAILS PROJECT

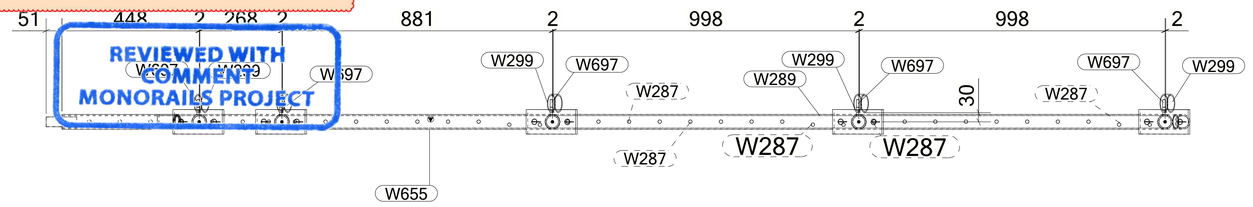

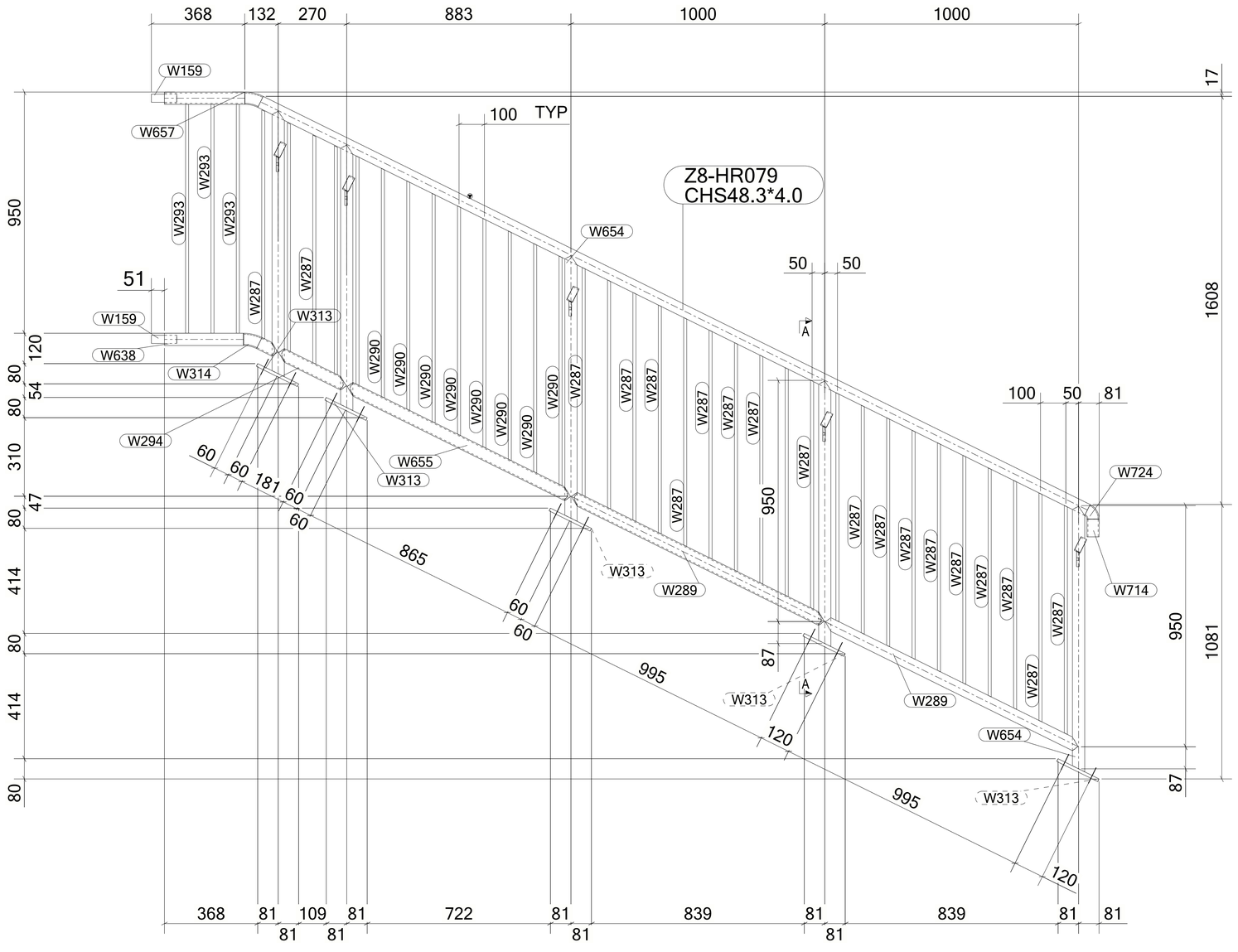

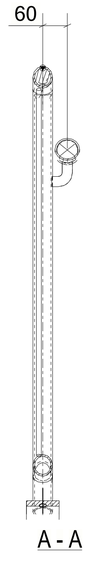

MATERIAL LIST FOR ASSEMBLY MK'D **Z8-HR079**

Mark	Profile	GRADE	No.	Length	Area	Weight
Z8-HR079	CHS48.3*4.0	S235JR	1	3633	0.54	15.88
W159	ROD32	S235JR	2	100	0.01	0.60
W287	ROD12	S355JR	24	902	0.03	0.72
W289	CHS48.3*4.0	S235JR	2	1111	0.17	4.86
W290	ROD12	S355JR	9	904	0.03	0.72
W293	ROD12	S355JR	3	902	0.03	0.72
W294	CHS48.3*4.0	S235JR	1	297	0.04	1.30
W299	PIPE2SCH40	S235JR	5	25	0.01	0.14
W313	PL12*80	S355JR	5	180	0.04	1.36
W314	CHS48.3*4.0	S235JR	2	64	0.01	0.28
W638	CHS48.3*4.0	S235JR	1	312	0.05	1.36
W654	CHS48.3*4.0	S235JR	5	1047	0.16	4.58
W655	CHS48.3*4.0	S235JR	1	981	0.15	4.29
W656	CHS48.3*4.0	S235JR	1	81	0.01	0.35
W657	CHS48.3*4.0	S235JR	1	317	0.05	1.38
W697	PL10*25	S355JR	5	78	0.01	0.14
W714	CHS48.3*4.0	S235JR	1	70	0.01	0.31
W724	CHS48.3*4.0	S235JR	1	44	0.01	0.19
				Total	3.45	93.41

BOLT LIST:-

BOLT \ STUD	BOLT DESCRIPTION	QTY	FINISH
BOLT	B1N2W 16 X 60 A325M	10	

1 *REQUIRED AS DRAWN MARKED* **Z8-HR079**

GENERAL NOTES:

1. THE DIMENSIONS SHOWN ARE NOMINAL (IN MILLIMETERS), U.N.O.
2. WELD SIZESHALL BE AISC MINIMUM OF 6 mm UNLESS NOTED OTHERWISE.
3. ALL FIELD WELDS SHALL BE INSPECTED PER QUALITY ASSURANCE AND SPECIAL INSPECTIONS.

REFERENCE DRAWINGS

1	93M-BOA-NAT-LOT-04833
2	93M-BOA-NAT-LOT-09170
3	93M-BOA-NAT-LOT-01976
4	93M-BOA-NAT-LOT-20021
5	
6	
7	
8	
9	

6TH OF OCTOBER CITY RAIL TRANSIT MONORAIL

The Authority — Hill International, Consultant — Main Contractor — Structural Designer

KEY PLAN:

6 October Monorail
Engineering Unit
Valid For Construction

SCALE	SHOPDRAWING	DATE
AS SHOWN		12/05/2023

REV	DATE	DSG.	CHK.	APP.	AMENDMENTS	STATUS
B	12/05/2023	M.KH	M.KH	DR.M.M	ISSUED FOR INFORMATION	IFI
A	11/20/2022	M.KH	M.KH	DR.M.M	ISSUED FOR INFORMATION	IFI

DRAWING TITLE
6TH OF OCTOBER MONORAIL
SERVICE WALKWAYS
ZONE (1008)
Z8-HR079

Project Code	Rubric	Initiator	Lot	Ref	Number	Revision
93	M047	6ACC	60DEP	DWG	08320	B

Tekla structures

approval is subject to approval of coordination package between multi-discipline

REVIEWED WITH COMMENT
MONORAILS PROJECT

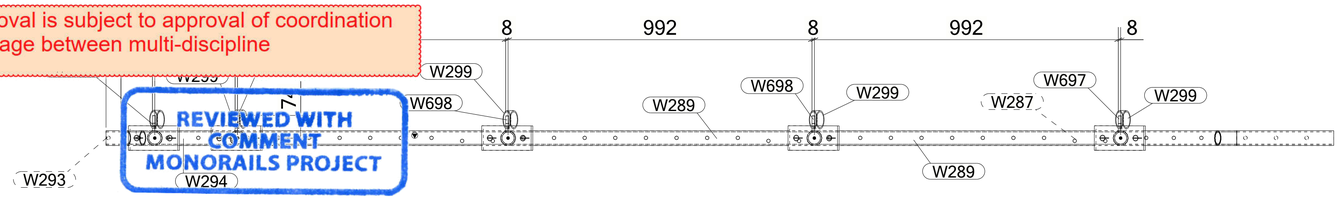

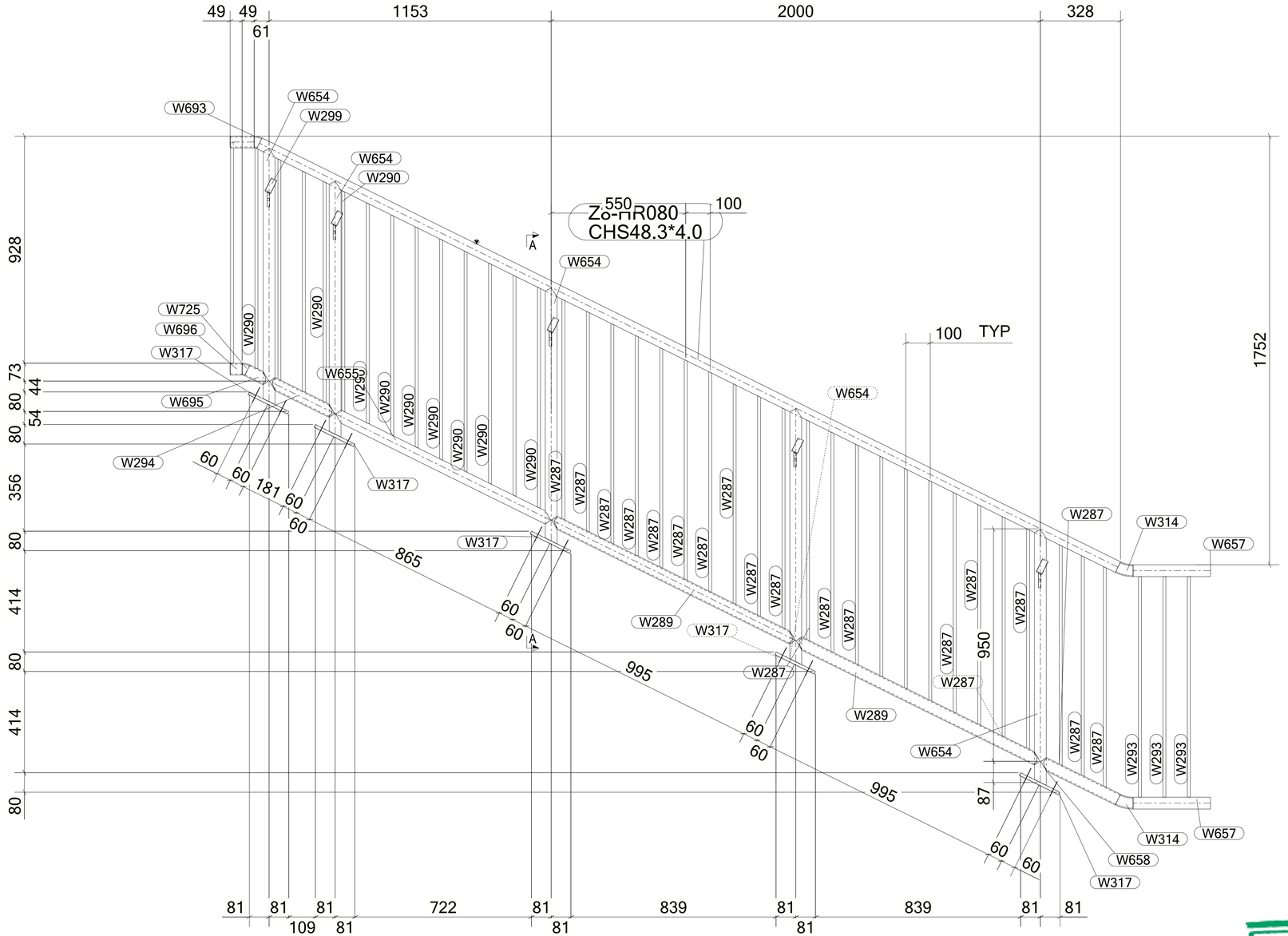

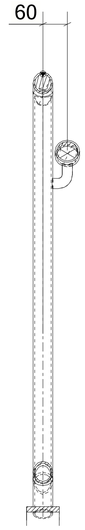

A - A

MATERIAL LIST FOR ASSEMBLY MK'D **Z8-HR080**

Mark	Profile	GRADE	No.	Length	Area	Weight
Z8-HR080	CHS48.3*4.0	S235JR	1	3914	0.59	17.12
W287	ROD12	S355JR	23	902	0.03	0.72
W289	CHS48.3*4.0	S235JR	2	1111	0.17	4.86
W290	ROD12	S355JR	13	905	0.03	0.72
W293	ROD12	S355JR	4	901	0.03	0.72
W294	CHS48.3*4.0	S235JR	1	297	0.04	1.30
W299	PIPE2SCH40	S235JR	5	25	0.01	0.14
W314	CHS48.3*4.0	S235JR	2	64	0.01	0.28
W317	PL12*80	S355JR	5	180	0.04	1.36
W654	CHS48.3*4.0	S235JR	5	1046	0.16	4.58
W655	CHS48.3*4.0	S235JR	1	981	0.15	4.29
W657	CHS48.3*4.0	S235JR	2	317	0.05	1.38
W658	CHS48.3*4.0	S235JR	1	351	0.05	1.54
W693	CHS48.3*4.0	S235JR	1	98	0.01	0.43
W695	CHS48.3*4.0	S235JR	1	97	0.01	0.43
W696	CHS48.3*4.0	S235JR	1	49	0.01	0.21
W697	PL10*25	S355JR	2	78	0.01	0.14
W698	PL10*25	S355JR	2	78	0.01	0.14
W699	PL10*25	S355JR	1	80	0.01	0.14
W725	CHS48.3*4.0	S235JR	2	22	0.00	0.10
				Total	3.67	98.28

BOLT LIST:-

BOLT \ STUD	BOLT DESCRIPTION		QTY	FINISH
BOLT	B1N2W 16 X 60	A325M	10	

1 *REQUIRED AS DRAWN MARKED* **Z8-HR080**

6 October Monorail
Engineering Unit
Valid For Construction

GENERAL NOTES:

1. THE DIMENSIONS SHOWN ARE NOMINAL (IN MILLIMETERS), U.N.O.
2. WELD SIZESHALL BE AISC MINIMUM OF 6 mm UNLESS NOTED OTHERWISE.
3. ALL FIELD WELDS SHALL BE INSPECTED PER QUALITY ASSURANCE AND SPECIAL INSPECTIONS.

REFERENCE DRAWINGS

1	93M-BOA-NAT-LOT-04833
2	93M-BOA-NAT-LOT-09170
3	93M-BOA-NAT-LOT-01976
4	93M-BOA-NAT-LOT-20021
5	
6	
7	
8	
9	

6TH OF OCTOBER CITY RAIL TRANSIT MONORAIL

The Authority | Consultant: Hill International | Main Contractor: Orascom Construction / Bombardier | Structural Designer: Innova Transportation

KEY PLAN:

SCALE: AS SHOWN | SHOPDRAWING | DATE: 12/05/2023

REV	DATE	DSG.	CHK.	APP.	AMENDMENTS	STATUS
B	12/05/2023	M.KH	M.KH	DR.M.M	ISSUED FOR INFORMATION	IFI
A	11/20/2022	M.KH	M.KH	DR.M.M	ISSUED FOR INFORMATION	IFI

DRAWING TITLE
6TH OF OCTOBER MONORAIL
SERVICE WALKWAYS
ZONE (1008)
Z8-HR080

Project Code	Rubric	Initiator	Lot	Ref	Number	Revision
93M	047	6ACC	60DE	PDWG	0832	1 B

Tekla structures

approval is subject to approval of coordination package between multi-discipline

REVIEWED WITH COMMENT
MONORAILS-PROJECT

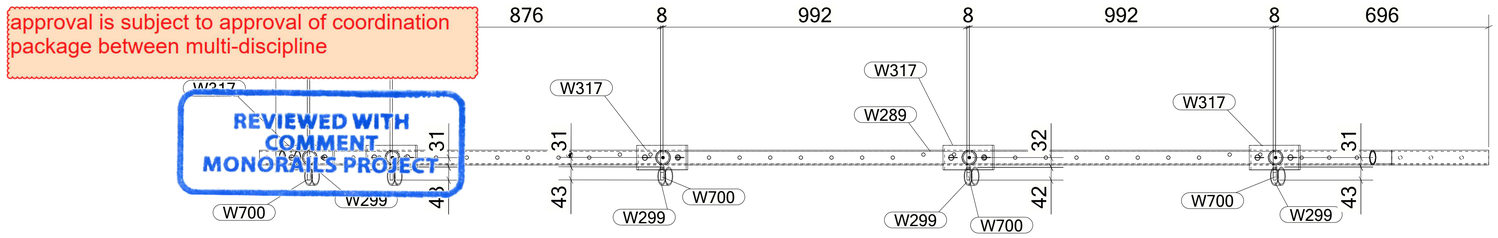

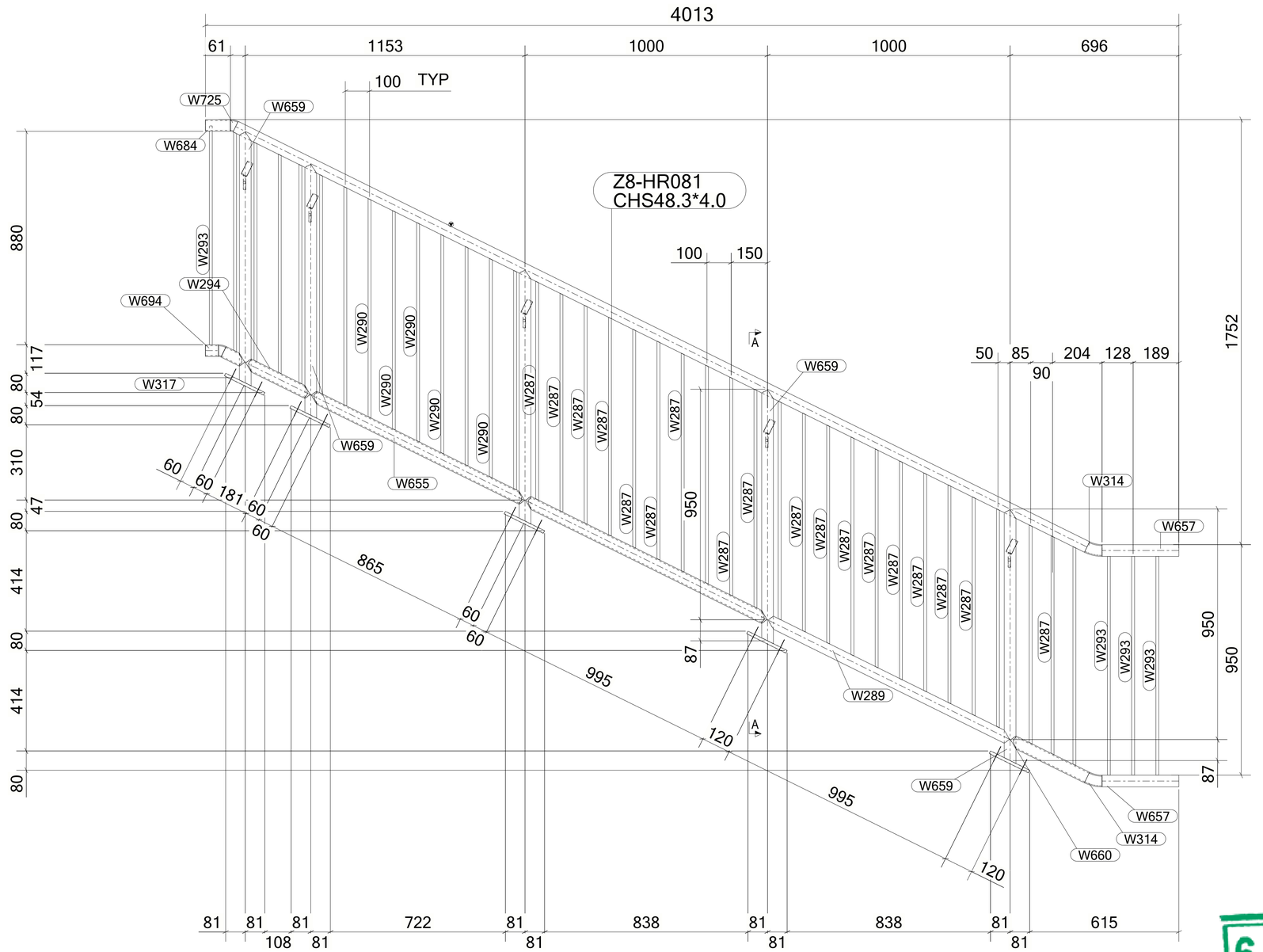

1 *REQUIRED AS DRAWN MARKED* **Z8-HR081**

MATERIAL LIST FOR ASSEMBLY MK'D **Z8-HR081**

Mark	Profile	GRADE	No.	Length	Area	Weight
Z8-HR081	CHS48.3*4.0	S235JR	1	3914	0.59	17.12
W287	ROD12	S355JR	23	902	0.03	0.72
W289	CHS48.3*4.0	S235JR	2	1111	0.17	4.86
W290	ROD12	S355JR	13	904	0.03	0.72
W293	ROD12	S355JR	4	902	0.03	0.72
W294	CHS48.3*4.0	S235JR	1	297	0.04	1.30
W299	PIPE2SCH40	S235JR	5	25	0.01	0.14
W314	CHS48.3*4.0	S235JR	2	64	0.01	0.28
W317	PL12*80	S355JR	5	180	0.04	1.36
W655	CHS48.3*4.0	S235JR	1	981	0.15	4.29
W657	CHS48.3*4.0	S235JR	2	317	0.05	1.38
W659	CHS48.3*4.0	S235JR	5	1047	0.16	4.58
W660	CHS48.3*4.0	S235JR	1	351	0.05	1.54
W684	CHS48.3*4.0	S235JR	1	103	0.02	0.45
W694	CHS48.3*4.0	S235JR	1	53	0.01	0.23
W700	PL10*25	S355JR	5	79	0.01	0.14
W719	CHS48.3*4.0	S235JR	1	98	0.01	0.43
W725	CHS48.3*4.0	S235JR	2	22	0.00	0.10
				Total	3.67	98.34

BOLT LIST:-

BOLT \ STUD	BOLT DESCRIPTION	QTY	FINISH
BOLT	B1N2W 16 X 60 A325M	10	

GENERAL NOTES:

1. THE DIMENSIONS SHOWN ARE NOMINAL (IN MILLIMETERS), U.N.O.
2. WELD SIZESHALL BE AISC MINIMUM OF 6 mm UNLESS NOTED OTHERWISE.
3. ALL FIELD WELDS SHALL BE INSPECTED PER QUALITY ASSURANCE AND SPECIAL INSPECTIONS.

REFERENCE DRAWINGS

1	93M-BOA-NAT-LOT-04833
2	93M-BOA-NAT-LOT-09170
3	93M-BOA-NAT-LOT-01976
4	93M-BOA-NAT-LOT-20021
5	
6	
7	
8	
9	

6TH OF OCTOBER CITY RAIL TRANSIT MONORAIL

The Authority | Consultant: Hill International | Main Contractor: ORASCOM CONSTRUCTION / BOMBARDIER | Structural Designer: INNOVA TRANSPORTATION

KEY PLAN:

6 October Monorail
Engineering Unit
Valid For Construction

SCALE	SHOPDRAWING	DATE
AS SHOWN		12/05/2023

REV	DATE	DSG.	CHK.	APP.	AMENDMENTS	STATUS
B	12/05/2023	MKH	MKH	DRMM	ISSUED FOR INFORMATION	IFI
A	11/20/2022	MKH	MKH	DRMM	ISSUED FOR INFORMATION	IFI

DRAWING TITLE
6TH OF OCTOBER MONORAIL
SERVICE WALKWAYS
ZONE (1008)
Z8-HR081

Project Code	Rubric	Initiator	Lot	Ref	Number	Revision
93M047	6ACC	60	DEP	DWG	08322	B

Tekla structures

approval is subject to approval of coordination package between multi-discipline

REVIEWED WITH COMMENT
MONORAILS PROJECT

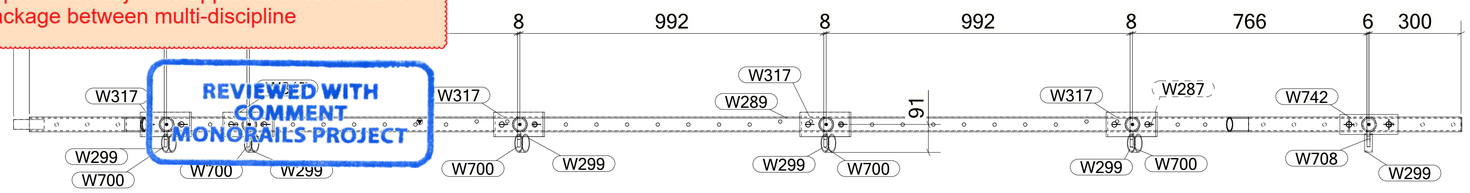

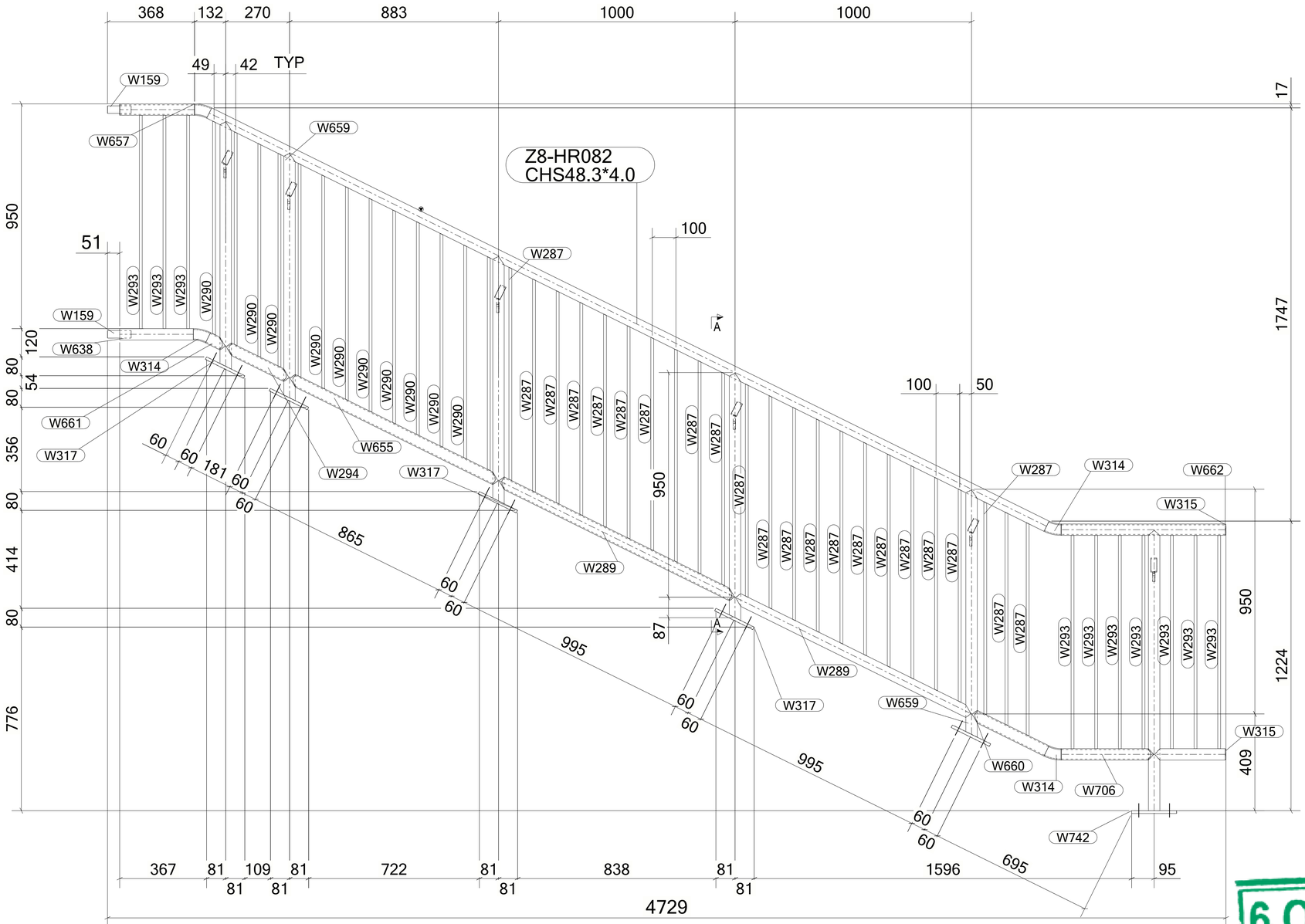

1 *REQUIRED AS DRAWN MARKED* **Z8-HR082**

MATERIAL LIST FOR ASSEMBLY MK'D **Z8-HR082**

Mark	Profile	GRADE	No.	Length	Area	Weight
Z8-HR082	CHS48.3*4.0	S235JR	1	3948	0.59	17.26
W159	ROD32	S235JR	2	100	0.01	0.60
W287	ROD12	S355JR	23	902	0.03	0.72
W289	CHS48.3*4.0	S235JR	2	1111	0.17	4.86
W290	ROD12	S355JR	13	904	0.03	0.72
W293	ROD12	S355JR	10	902	0.03	0.72
W294	CHS48.3*4.0	S235JR	1	297	0.04	1.30
W299	PIPE2SCH40	S235JR	6	25	0.01	0.14
W314	CHS48.3*4.0	S235JR	4	64	0.01	0.28
W315	PL3*45	S355JR	2	45	0.00	0.03
W317	PL12*80	S355JR	5	180	0.04	1.36
W638	CHS48.3*4.0	S235JR	1	312	0.05	1.36
W655	CHS48.3*4.0	S235JR	1	981	0.15	4.29
W657	CHS48.3*4.0	S235JR	1	317	0.05	1.38
W659	CHS48.3*4.0	S235JR	5	1046	0.16	4.58
W660	CHS48.3*4.0	S235JR	1	351	0.05	1.54
W661	CHS48.3*4.0	S235JR	1	81	0.01	0.35
W662	CHS48.3*4.0	S235JR	1	693	0.10	3.03
W663	CHS48.3*4.0	S235JR	1	299	0.04	1.31
W700	PL10*25	S355JR	5	79	0.01	0.14
W705	CHS48.3*4.0	S235JR	1	1186	0.18	5.19
W706	CHS48.3*4.0	S235JR	1	391	0.06	1.71
W708	PL10*25	S355JR	1	58	0.00	0.11
W742	PL12*65	S355JR	1	190	0.03	1.16
				Total	4.31	116.32

BOLT LIST:-

BOLT \ STUD	BOLT DESCRIPTION		QTY	FINISH
BOLT	B1N2W16 X 50	A325M	2	
BOLT	B1N2W16 X 60	A325M	10	

6 October Monorail
Engineering Unit
Valid For Construction

GENERAL NOTES:

1. THE DIMENSIONS SHOWN ARE NOMINAL (IN MILLIMETERS), U.N.O.
2. WELD SIZESHALL BE AISC MINIMUM OF 6 mm UNLESS NOTED OTHERWISE.
3. ALL FIELD WELDS SHALL BE INSPECTED PER QUALITY ASSURANCE AND SPECIAL INSPECTIONS.

REFERENCE DRAWINGS

1	93M-BOA-NAT-LOT-04833
2	93M-BOA-NAT-LOT-09170
3	93M-BOA-NAT-LOT-01976
4	93M-BOA-NAT-LOT-20021
5	
6	
7	
8	
9	

6TH OF OCTOBER CITY RAIL TRANSIT MONORAIL

The Authority | Consultant: Hill International | Main Contractor: Orascom Construction, Ch. Dala Construction, Bombardier | Structural Designer: INNOVA Transportation

KEY PLAN:

SCALE	SHOPDRAWING	DATE
AS SHOWN		12/05/2023

REV	DATE	DSG.	CHK.	APP.	AMENDMENTS	STATUS
B	12/05/2023	M.KH	M.KH	DR.M.M	ISSUED FOR INFORMATION	IFI
A	11/20/2022	M.KH	M.KH	DR.M.M	ISSUED FOR INFORMATION	IFI

DRAWING TITLE
6TH OF OCTOBER MONORAIL
SERVICE WALKWAYS
ZONE (1008)
Z8-HR082

Project Code	Rubric	Initiator	Lot	Ref	Number	Revision
93M	047	6ACC	60DE	PDWG	08323	B

Tekla structures

approval is subject to approval of coordination package between multi-discipline

REVIEWED WITH COMMENT
MONORAILS PROJECT

MATERIAL LIST FOR ASSEMBLY MK'D **Z8-HR083**

Mark	Profile	GRADE	No.	Length	Area	Weight
Z8-HR083	CHS48.3*4.0	S235JR	1	3948	0.59	17.26
W159	ROD32	S235JR	1	100	0.01	0.60
W314	CHS48.3*4.0	S235JR	2	64	0.01	0.28
W315	PL3*45	S355JR	1	45	0.00	0.03
W657	CHS48.3*4.0	S235JR	1	317	0.05	1.38
W702	CHS48.3*4.0	S235JR	1	703	0.11	3.08
				Total	0.78	22.92

BOLT LIST:-

BOLT \ STUD	BOLT DESCRIPTION	QTY	FINISH

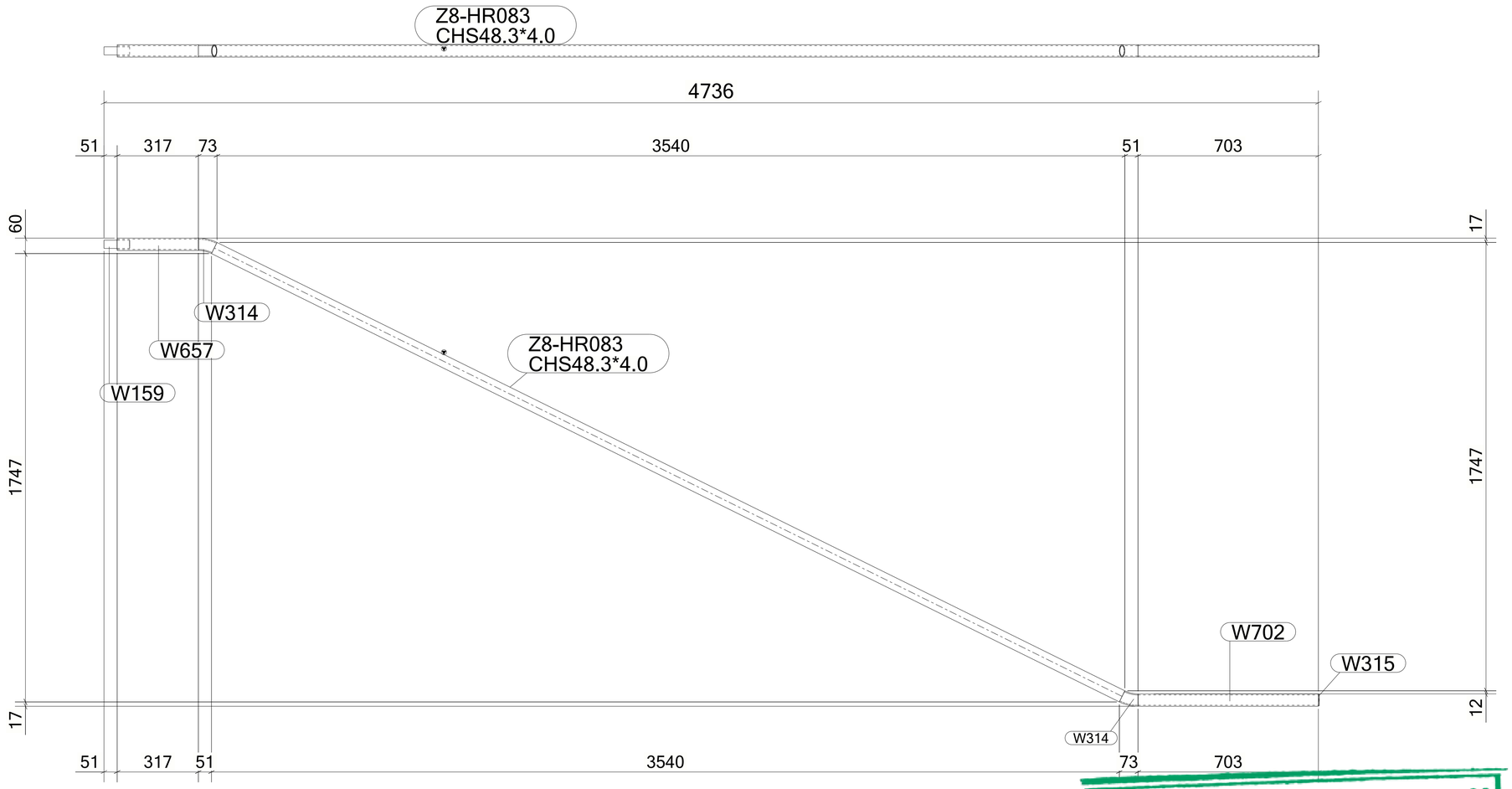

1 *REQUIRED AS DRAWN MARKED* **Z8-HR083**

6 October Monorail
Engineering Unit
Valid For Construction

GENERAL NOTES:

1. THE DIMENSIONS SHOWN ARE NOMINAL (IN MILLIMETERS), U.N.O.
2. WELD SIZESHALL BE AISC MINIMUM OF 6 mm UNLESS NOTED OTHERWISE.
3. ALL FIELD WELDS SHALL BE INSPECTED PER QUALITY ASSURANCE AND SPECIAL INSPECTIONS.

REFERENCE DRAWINGS

1	93M-BOA-NAT-LOT-04833
2	93M-BOA-NAT-LOT-09170
3	93M-BOA-NAT-LOT-01976
4	93M-BOA-NAT-LOT-20021
5	
6	
7	
8	
9	

6TH OF OCTOBER CITY RAIL TRANSIT MONORAIL

The Authority | Consultant: Hill International | Main Contractor: ORASCOM CONSTRUCTION / BOMBARDIER | Structural Designer: INNOVA TRANSPORTATION

KEY PLAN:

SCALE: AS SHOWN | SHOPDRAWING | DATE: 12/05/2023

REV	DATE	DSG.	CHK.	APP.	AMENDMENTS	STATUS
B	12/05/2023	M.KH	M.KH	DR.M.M	ISSUED FOR INFORMATION	IFI
A	11/20/2022	M.KH	M.KH	DR.M.M	ISSUED FOR INFORMATION	IFI

DRAWING TITLE
6TH OF OCTOBER MONORAIL
SERVICE WALKWAYS
ZONE (1008)
Z8-HR083

Project Code	Rubric	Initiator	Lot	Ref	Number	Revision
93M	0476	ACC	60DEP	DWG	08324	B

Tekla structures

approval is subject to approval of coordination package between multi-discipline

REVIEWED WITH COMMENT
MONORAILS PROJECT

MATERIAL LIST FOR ASSEMBLY MK'D **Z8-HR084**

Mark	Profile	GRADE	No.	Length	Area	Weight
Z8-HR084	CHS48.3*4.0	S235JR	1	3695	0.55	16.16
W159	ROD32	S235JR	1	100	0.01	0.60
W314	CHS48.3*4.0	S235JR	1	64	0.01	0.28
W657	CHS48.3*4.0	S235JR	1	317	0.05	1.38
W715	CHS48.3*4.0	S235JR	1	35	0.01	0.15
W744	CHS48.3*4.0	S235JR	1	53	0.01	0.23
				Total	0.64	18.81

BOLT LIST:-

BOLT \ STUD	BOLT DESCRIPTION	QTY	FINISH

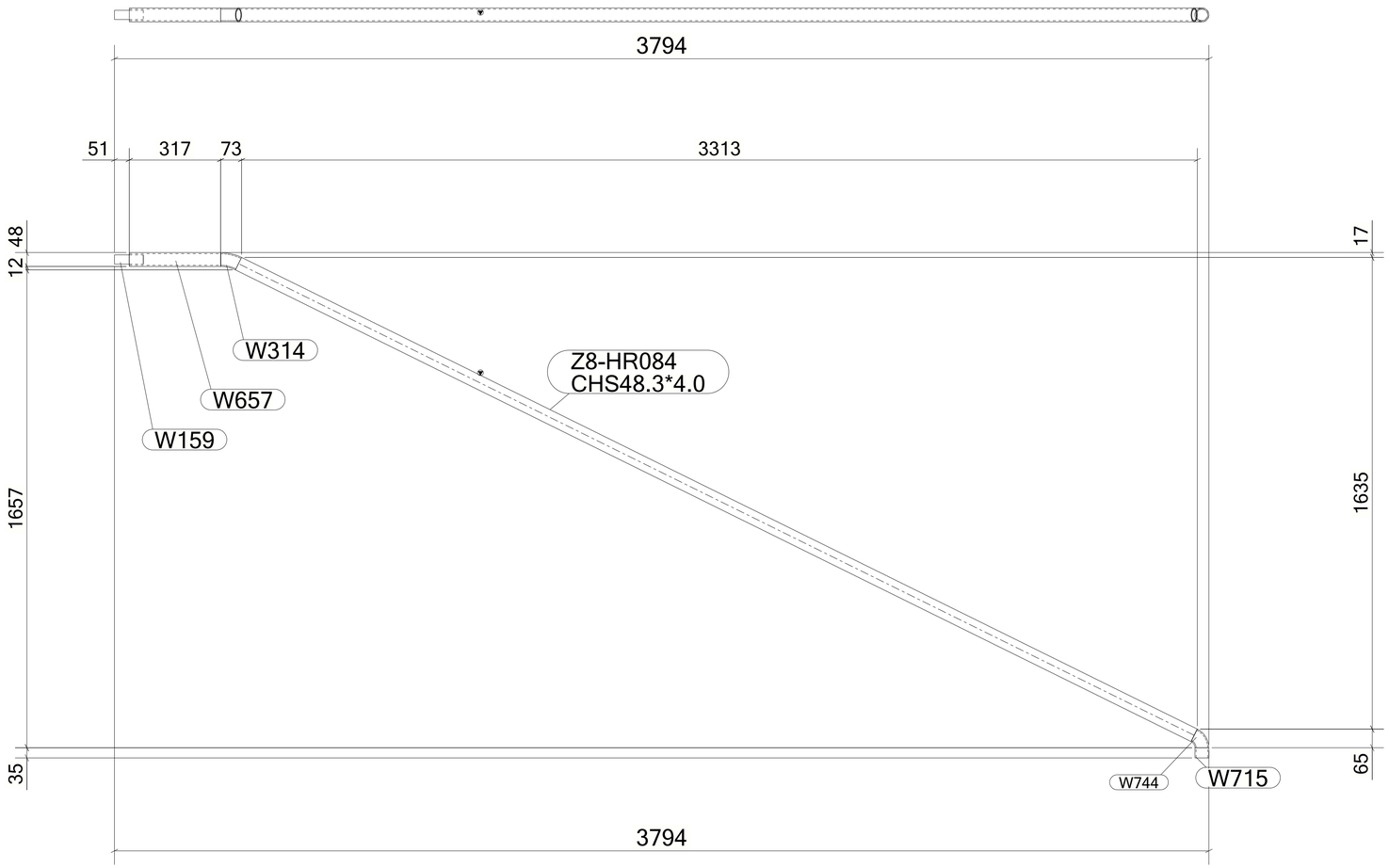

1 *REQUIRED AS DRAWN MARKED* **Z8-HR084**

6 October Monorail
Engineering Unit
Valid For Construction

GENERAL NOTES:

1. THE DIMENSIONS SHOWN ARE NOMINAL (IN MILLIMETERS), U.N.O.
2. WELD SIZESHALL BE AISC MINIMUM OF 6 mm UNLESS NOTED OTHERWISE.
3. ALL FIELD WELDS SHALL BE INSPECTED PER QUALITY ASSURANCE AND SPECIAL INSPECTIONS.

REFERENCE DRAWINGS

1	93M-BOA-NAT-LOT-04833
2	93M-BOA-NAT-LOT-09170
3	93M-BOA-NAT-LOT-01976
4	93M-BOA-NAT-LOT-20021
5	
6	
7	
8	
9	

6TH OF OCTOBER CITY RAIL TRANSIT MONORAIL

The Authority | Hill International Consultant | Main Contractor | Structural Designer

KEY PLAN:

SCALE	SHOPDRAWING	DATE
AS SHOWN		12/05/2023

REV	DATE	DSG.	CHK.	APP.	AMENDMENTS	STATUS
B	12/05/2023	M.KH	M.KH	DR.M.M	ISSUED FOR INFORMATION	IFI
A	11/20/2022	M.KH	M.KH	DR.M.M	ISSUED FOR INFORMATION	IFI

DRAWING TITLE
6TH OF OCTOBER MONORAIL
SERVICE WALKWAYS
ZONE (1008)
Z8-HR084

Project Code	Rubric	Initiator	Lot	Ref	Number	Revision
93M	047	ACC	60DEP	DWG	08325	B

Tekla structures

approval is subject to approval of coordination package between multi-discipline

REVIEWED WITH COMMENT MONORAILS PROJECT

MATERIAL LIST FOR ASSEMBLY MK'D **Z8-HR085**

Mark	Profile	GRADE	No.	Length	Area	Weight
Z8-HR085	CHS48.3*4.0	S235JR	1	3893	0.58	17.02
W314	CHS48.3*4.0	S235JR	2	64	0.01	0.28
W657	CHS48.3*4.0	S235JR	1	317	0.05	1.38
W701	CHS48.3*4.0	S235JR	1	139	0.02	0.61
				Total	0.67	19.57

BOLT LIST:-

BOLT \ STUD	BOLT DESCRIPTION	QTY	FINISH

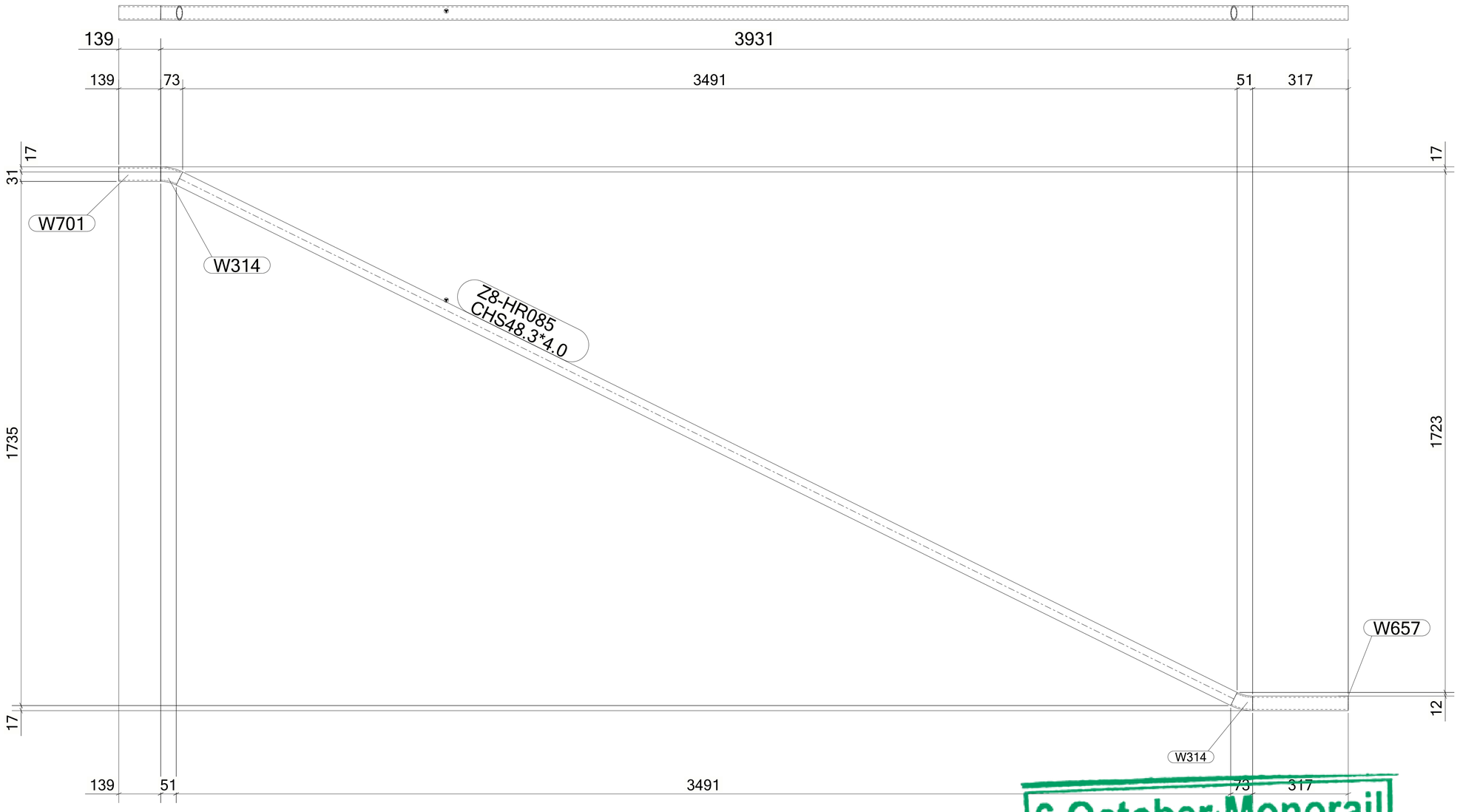

1 *REQUIRED AS DRAWN MARKED* **Z8-HR085**

6 October Monorail Engineering Unit
Valid For Construction

GENERAL NOTES:

1. THE DIMENSIONS SHOWN ARE NOMINAL (IN MILLIMETERS), U.N.O.
2. WELD SIZESHALL BE AISC MINIMUM OF 6 mm UNLESS NOTED OTHERWISE.
3. ALL FIELD WELDS SHALL BE INSPECTED PER QUALITY ASSURANCE AND SPECIAL INSPECTIONS.

REFERENCE DRAWINGS

1	93M-BOA-NAT-LOT-04833
2	93M-BOA-NAT-LOT-09170
3	93M-BOA-NAT-LOT-01976
4	93M-BOA-NAT-LOT-20021
5	
6	
7	
8	
9	

6TH OF OCTOBER CITY RAIL TRANSIT MONORAIL

The Authority | Hill International Consultant | ORASCOM BOMBARDIER Main Contractor | INNOVA Structural Designer

KEY PLAN:

SCALE	SHOPDRAWING	DATE
AS SHOWN		12/05/2023

REV	DATE	DSG.	CHK.	APP.	AMENDMENTS	STATUS
B	12/05/2023	M.KH	M.KH	DR.M.M	ISSUED FOR INFORMATION	IFI
A	11/20/2022	M.KH	M.KH	DR.M.M	ISSUED FOR INFORMATION	IFI

DRAWING TITLE
6TH OF OCTOBER MONORAIL SERVICE WALKWAYS ZONE (1008)
Z8-HR085

Project Code	Rubric	Initiator	Lot	Ref	Number	Revision
9 3 M	0 4 7 6	A C C	6 0 D E P	D W G	0 8 3 2 6	B

Tekla structures

approval is subject to approval of coordination package between multi-discipline

REVIEWED WITH COMMENT MONORAILS PROJECT

MATERIAL LIST FOR ASSEMBLY MK'D **Z8-HR086**

Mark	Profile	GRADE	No.	Length	Area	Weight
Z8-HR086	CHS48.3*4.0	S235JR	1	3893	0.58	17.02
W314	CHS48.3*4.0	S235JR	2	64	0.01	0.28
W657	CHS48.3*4.0	S235JR	1	317	0.05	1.38
W703	CHS48.3*4.0	S235JR	1	140	0.02	0.61
				Total	0.67	19.58

BOLT LIST:-

BOLT \ STUD	BOLT DESCRIPTION	QTY	FINISH

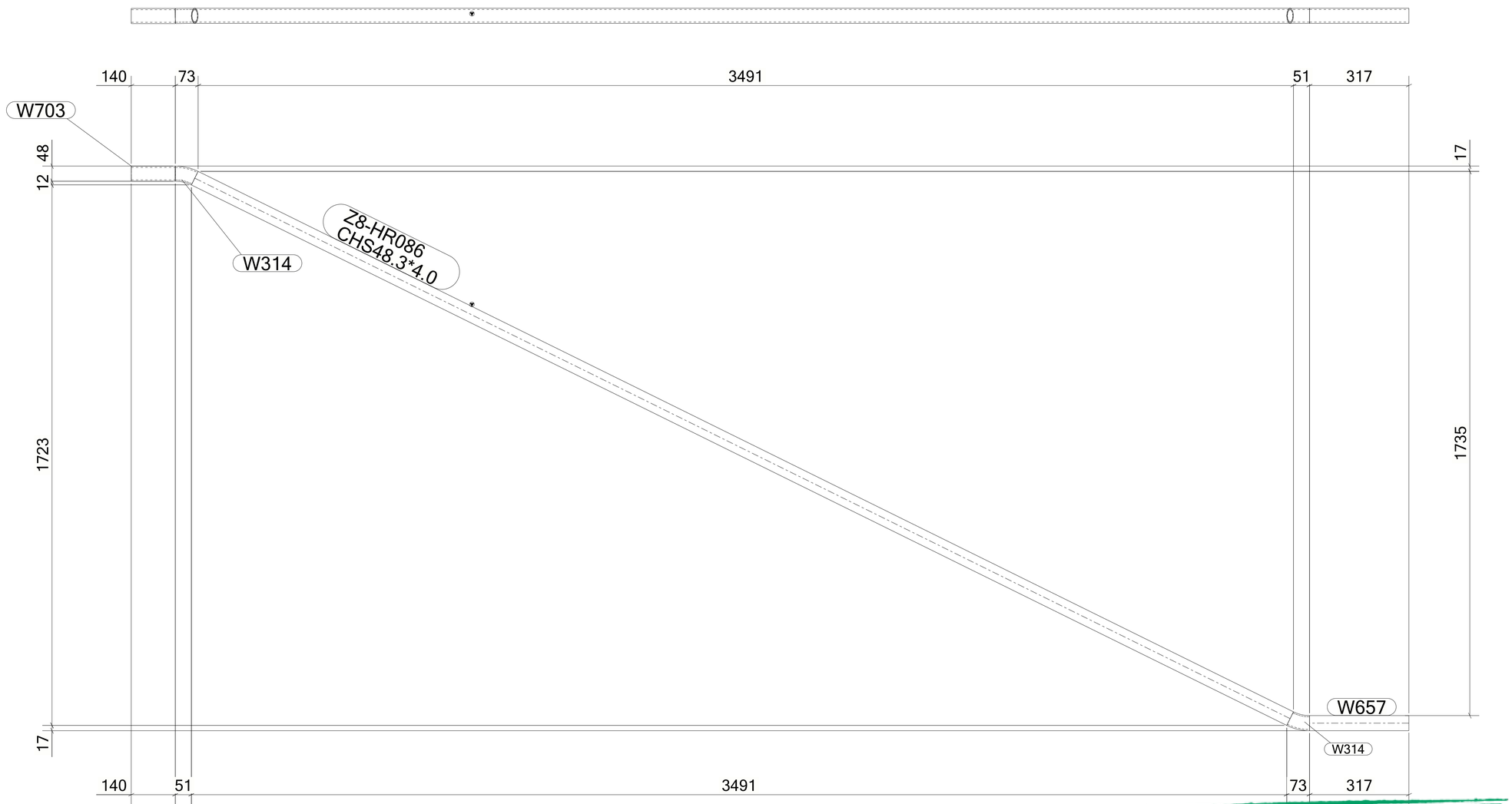

1 *REQUIRED AS DRAWN MARKED* **Z8-HR086**

6 October Monorail Engineering Unit
Valid For Construction

GENERAL NOTES:

1. THE DIMENSIONS SHOWN ARE NOMINAL (IN MILLIMETERS), U.N.O.
2. WELD SIZESHALL BE AISC MINIMUM OF 6 mm UNLESS NOTED OTHERWISE.
3. ALL FIELD WELDS SHALL BE INSPECTED PER QUALITY ASSURANCE AND SPECIAL INSPECTIONS.

REFERENCE DRAWINGS

1	93M-BOA-NAT-LOT-04833
2	93M-BOA-NAT-LOT-09170
3	93M-BOA-NAT-LOT-01976
4	93M-BOA-NAT-LOT-20021
5	
6	
7	
8	
9	

6TH OF OCTOBER CITY RAIL TRANSIT MONORAIL

The Authority | Hill International Consultant | ORASCOM BOMBARDIER Main Contractor | INNOVA TRANSPORTATION Structural Designer

KEY PLAN:

SCALE	SHOPDRAWING	DATE
AS SHOWN		12/05/2023

REV	DATE	DSG.	CHK.	APP.	AMENDMENTS	STATUS
B	12/05/2023	M.KH	M.KH	DR.M.M	ISSUED FOR INFORMATION	IFI
A	11/20/2022	M.KH	M.KH	DR.M.M	ISSUED FOR INFORMATION	IFI

DRAWING TITLE
6TH OF OCTOBER MONORAIL SERVICE WALKWAYS ZONE (1008)
Z8-HR086

Project Code	Rubric	Initiator	Lot	Ref	Number	Revision
93M	0476	ACC	60DEP	DWG	08327	B

Tekla structures

approval is subject to approval of coordination package between multi-discipline

REVIEWED WITH COMMENT
MONORAILS PROJECT

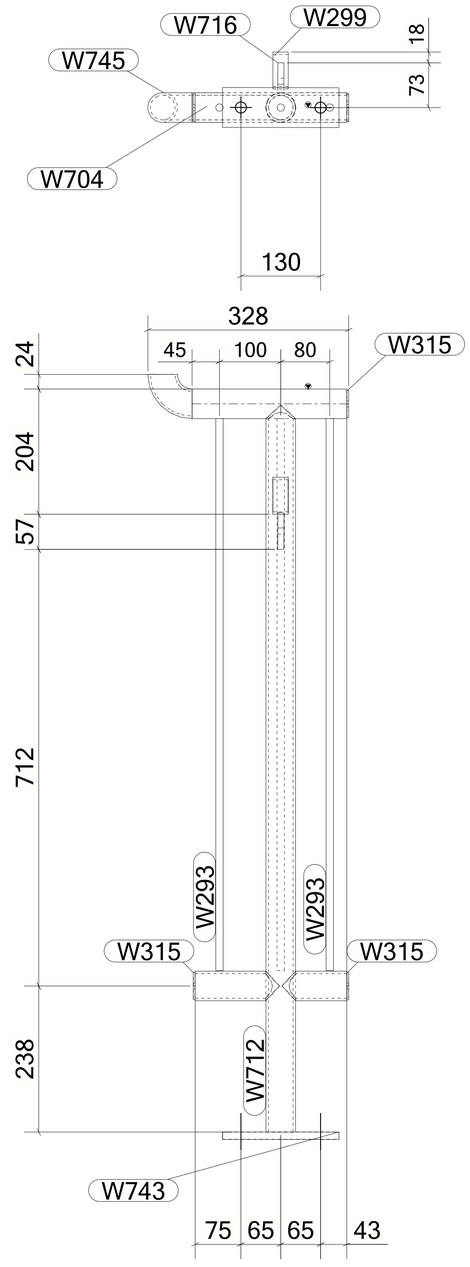

MATERIAL LIST FOR ASSEMBLY MK'D **Z8-HR087**

Mark	Profile	GRADE	No.	Length	Area	Weight
Z8-HR087	CHS48.3*4.0	S235JR	1	253	0.04	1.10
W293	ROD12	S355JR	3	901	0.03	0.72
W299	PIPE2SCH40	S235JR	1	25	0.01	0.14
W315	PL3*45	S355JR	3	45	0.00	0.03
W704	CHS48.3*4.0	S235JR	1	138	0.02	0.60
W712	CHS48.3*4.0	S235JR	1	1186	0.18	5.19
W713	CHS48.3*4.0	S235JR	1	106	0.02	0.46
W716	PL10*25	S355JR	1	74	0.01	0.14
W743	PL12*65	S355JR	1	190	0.03	1.16
W745	CHS48.3*4.0	S235JR	1	75	0.01	0.33
				Total	0.42	11.39

BOLT LIST:-

BOLT \ STUD	BOLT DESCRIPTION		QTY	FINISH
BOLT	B1N2W16 X 50	A325M	2	

1 *REQUIRED AS DRAWN MARKED* **Z8-HR087**

GENERAL NOTES:

1. THE DIMENSIONS SHOWN ARE NOMINAL (IN MILLIMETERS), U.N.O.
2. WELD SIZESHALL BE AISC MINIMUM OF 6 mm UNLESS NOTED OTHERWISE.
3. ALL FIELD WELDS SHALL BE INSPECTED PER QUALITY ASSURANCE AND SPECIAL INSPECTIONS.

REFERENCE DRAWINGS

1	93M-BOA-NAT-LOT-04833
2	93M-BOA-NAT-LOT-09170
3	93M-BOA-NAT-LOT-01976
4	93M-BOA-NAT-LOT-20021
5	
6	
7	
8	
9	

6TH OF OCTOBER CITY RAIL TRANSIT MONORAIL

The Authority — Hill International Consultant — Main Contractor — Structural Designer

KEY PLAN:

6 October Monorail
Engineering Unit
Valid For Construction

REV	DATE	DSG.	CHK.	APP.	AMENDMENTS	STATUS
B	12/05/2023	M.KH	M.KH	DR.M.M	ISSUED FOR INFORMATION	IFI
A	11/20/2022	M.KH	M.KH	DR.M.M	ISSUED FOR INFORMATION	IFI

SCALE: AS SHOWN | SHOPDRAWING | DATE: 12/05/2023

DRAWING TITLE
6TH OF OCTOBER MONORAIL
SERVICE WALKWAYS
ZONE (1008)
Z8-HR087

Project Code	Rubric	Initiator	Lot	Ref	Number	Revision
93M	047	6ACC	60DE	PDWG	0832	B

Tekla structures

approval is subject to approval of coordination package between multi-discipline

REVIEWED WITH COMMENT
MONORAILS PROJECT

MATERIAL LIST FOR ASSEMBLY MK'D **Z8-HR088**

Mark	Profile	GRADE	No.	Length	Area	Weight
Z8-HR088	CHS48.3*4.0	S235JR	1	312	0.05	1.36
W315	PL3*45	S355JR	1	45	0.00	0.03
W745	CHS48.3*4.0	S235JR	1	75	0.01	0.33
				Total	0.06	1.73

BOLT LIST:-

BOLT \ STUD	BOLT DESCRIPTION	QTY	FINISH

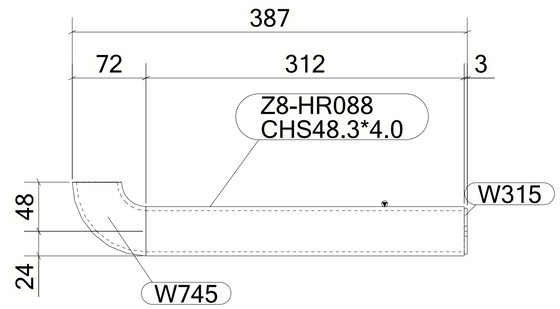

1 *REQUIRED AS DRAWN MARKED* **Z8-HR088**

6 October Monorail
Engineering Unit
Valid For Construction

GENERAL NOTES:

1. THE DIMENSIONS SHOWN ARE NOMINAL (IN MILLIMETERS), U.N.O.
2. WELD SIZESHALL BE AISC MINIMUM OF 6 mm UNLESS NOTED OTHERWISE.
3. ALL FIELD WELDS SHALL BE INSPECTED PER QUALITY ASSURANCE AND SPECIAL INSPECTIONS.

REFERENCE DRAWINGS

1	93M-BOA-NAT-LOT-04833
2	93M-BOA-NAT-LOT-09170
3	93M-BOA-NAT-LOT-01976
4	93M-BOA-NAT-LOT-20021
5	
6	
7	
8	
9	

6TH OF OCTOBER CITY RAIL TRANSIT MONORAIL

The Authority | Consultant: Hill International | Main Contractor: ORASCOM CONSTRUCTION, BOMBARDIER | Structural Designer: INNOVA TRANSPORTATION

KEY PLAN:

SCALE	SHOPDRAWING	DATE
AS SHOWN		12/05/2023

REV	DATE	DSG.	CHK.	APP.	AMENDMENTS	STATUS
B	12/05/2023	M.KH	M.KH	DR.M.M	ISSUED FOR INFORMATION	IFI
A	11/20/2022	M.KH	M.KH	DR.M.M	ISSUED FOR INFORMATION	IFI

DRAWING TITLE
6TH OF OCTOBER MONORAIL
SERVICE WALKWAYS
ZONE (1008)
Z8-HR088

Project Code	Rubric	Initiator	Lot	Ref	Number	Revision
9 3 M 0 4 7 6	A C C	6 0 D E P	D W G	0 8 3 2 9		B

Tekla structures

approval is subject to approval of coordination package between multi-discipline

REVIEWED WITH COMMENT
MONORAILS PROJECT

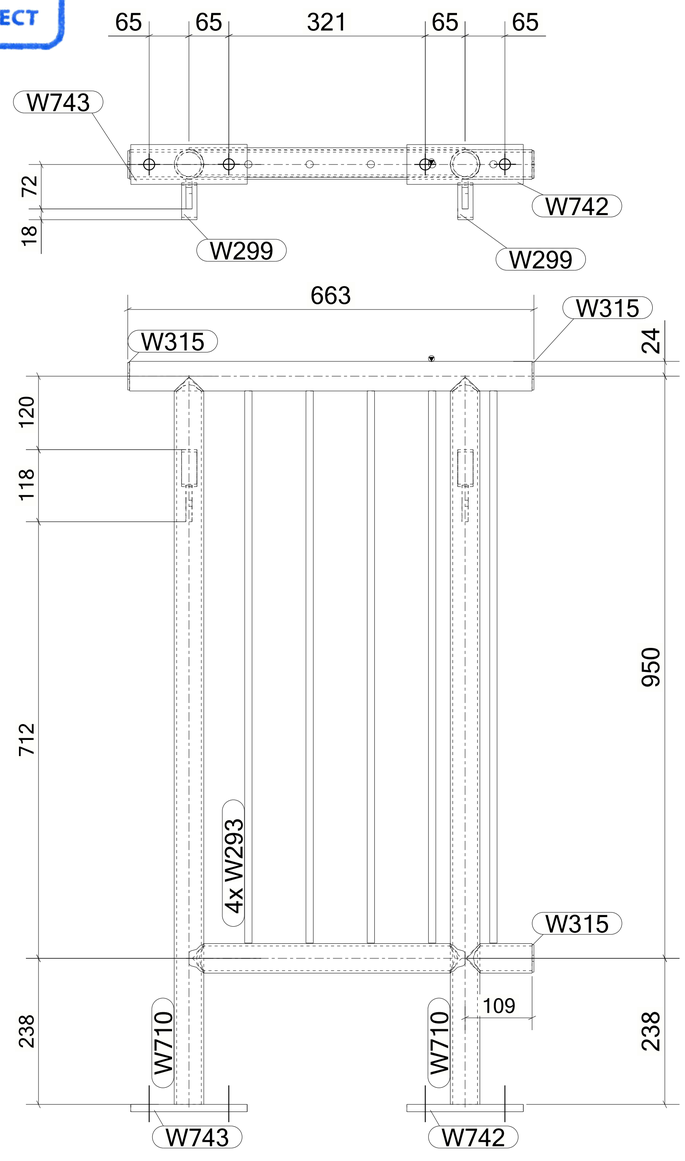

MATERIAL LIST FOR ASSEMBLY MK'D **Z8-HR089**

Mark	Profile	GRADE	No.	Length	Area	Weight
Z8-HR089	CHS48.3*4.0	S235JR	1	657	0.10	2.87
W293	ROD12	S355JR	5	901	0.03	0.72
W299	PIPE2SCH40	S235JR	2	25	0.01	0.14
W315	PL3*45	S355JR	3	45	0.00	0.03
W709	CHS48.3*4.0	S235JR	1	451	0.07	1.97
W710	CHS48.3*4.0	S235JR	2	1187	0.18	5.19
W711	CHS48.3*4.0	S235JR	1	108	0.02	0.47
W716	PL10*25	S355JR	2	74	0.01	0.14
W742	PL12*65	S355JR	1	190	0.03	1.16
W743	PL12*65	S355JR	1	190	0.03	1.16
				Total	0.80	22.28

BOLT LIST:-

BOLT \ STUD	BOLT DESCRIPTION	QTY	FINISH
BOLT	B1N2W16 X 50 A325M	4	

1 *REQUIRED AS DRAWN MARKED* **Z8-HR089**

GENERAL NOTES:

1. THE DIMENSIONS SHOWN ARE NOMINAL (IN MILLIMETERS), U.N.O.
2. WELD SIZESHALL BE AISC MINIMUM OF 6 mm UNLESS NOTED OTHERWISE.
3. ALL FIELD WELDS SHALL BE INSPECTED PER QUALITY ASSURANCE AND SPECIAL INSPECTIONS.

REFERENCE DRAWINGS

1	93M-BOA-NAT-LOT-04833
2	93M-BOA-NAT-LOT-09170
3	93M-BOA-NAT-LOT-01976
4	93M-BOA-NAT-LOT-20021
5	
6	
7	
8	
9	

6TH OF OCTOBER CITY RAIL TRANSIT MONORAIL

The Authority — Hill International (Consultant) — Main Contractor — Structural Designer

KEY PLAN:

6 October Monorail
Engineering Unit
Valid For Construction

REV	DATE	DSG.	CHK.	APP.	AMENDMENTS	STATUS
B	12/05/2023	M.KH	M.KH	DR.M.M	ISSUED FOR INFORMATION	IFI
A	11/20/2022	M.KH	M.KH	DR.M.M	ISSUED FOR INFORMATION	IFI

SCALE: AS SHOWN | SHOPDRAWING | DATE: 12/05/2023

DRAWING TITLE
6TH OF OCTOBER MONORAIL
SERVICE WALKWAYS
ZONE (1008)
Z8-HR089

Project Code	Rubric	Initiator	Lot	Ref	Number	Revision
93M	047	6ACC	60DE	PDWG	0833	B

Tekla structures

approval is subject to approval of coordination package between multi-discipline

REVIEWED WITH COMMENT
MONORAILS PROJECT

MATERIAL LIST FOR ASSEMBLY MK'D **Z8-HR090**

Mark	Profile	GRADE	No.	Length	Area	Weight
Z8-HR090	CHS48.3*4.0	S235JR	1	747	0.11	3.27
W315	PL3*45	S355JR	2	45	0.00	0.03
				Total	0.12	3.33

BOLT LIST:-

BOLT \ STUD	BOLT DESCRIPTION	QTY	FINISH

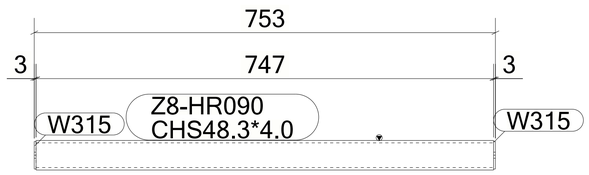

1 *REQUIRED AS DRAWN MARKED* **Z8-HR090**

6 October Monorail
Engineering Unit
Valid For Construction

GENERAL NOTES:

1. THE DIMENSIONS SHOWN ARE NOMINAL (IN MILLIMETERS), U.N.O.
2. WELD SIZESHALL BE AISC MINIMUM OF 6 mm UNLESS NOTED OTHERWISE.
3. ALL FIELD WELDS SHALL BE INSPECTED PER QUALITY ASSURANCE AND SPECIAL INSPECTIONS.

REFERENCE DRAWINGS

1	93M-BOA-NAT-LOT-04833
2	93M-BOA-NAT-LOT-09170
3	93M-BOA-NAT-LOT-01976
4	93M-BOA-NAT-LOT-20021
5	
6	
7	
8	
9	

6TH OF OCTOBER CITY RAIL TRANSIT MONORAIL

The Authority | Hill International Consultant | Main Contractor | Structural Designer

KEY PLAN:

SCALE	SHOPDRAWING	DATE
AS SHOWN		12/05/2023

REV	DATE	DSG.	CHK.	APP.	AMENDMENTS	STATUS
B	12/05/2023	M.KH	M.KH	DR.M.M	ISSUED FOR INFORMATION	IFI
A	11/20/2022	M.KH	M.KH	DR.M.M	ISSUED FOR INFORMATION	IFI

DRAWING TITLE
6TH OF OCTOBER MONORAIL
SERVICE WALKWAYS
ZONE (1008)
Z8-HR090

Project Code	Rubric	Initiator	Lot	Ref	Number	Revision
9 3 M 0 4 7 6	A C C	6 0 D E P	D W G	0 8 3 3 1		B

Tekla structures

approval is subject to approval of coordination package between multi-discipline

REVIEWED WITH COMMENT
MONORAILS PROJECT

MATERIAL LIST FOR ASSEMBLY MK'D **Z8-HR091**

Mark	Profile	GRADE	No.	Length	Area	Weight
Z8-HR091	CHS48.3*4.0	S235JR	1	5450	0.82	23.83
				Total	0.82	23.83

BOLT LIST:-

BOLT \ STUD	BOLT DESCRIPTION	QTY	FINISH

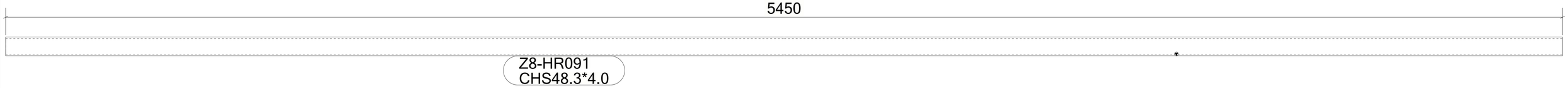

1 *REQUIRED AS DRAWN MARKED* **Z8-HR091**

6 October Monorail
Engineering Unit
Valid For Construction

GENERAL NOTES:

1. THE DIMENSIONS SHOWN ARE NOMINAL (IN MILLIMETERS), U.N.O.
2. WELD SIZESHALL BE AISC MINIMUM OF 6 mm UNLESS NOTED OTHERWISE.
3. ALL FIELD WELDS SHALL BE INSPECTED PER QUALITY ASSURANCE AND SPECIAL INSPECTIONS.

REFERENCE DRAWINGS

1	93M-BOA-NAT-LOT-04833
2	93M-BOA-NAT-LOT-09170
3	93M-BOA-NAT-LOT-01976
4	93M-BOA-NAT-LOT-20021
5	
6	
7	
8	
9	

6TH OF OCTOBER CITY RAIL TRANSIT MONORAIL

The Authority | Hill International Consultant | Main Contractor | Structural Designer

KEY PLAN:

SCALE: AS SHOWN | SHOPDRAWING | DATE: 12/05/2023

REV	DATE	DSG.	CHK.	APP.	AMENDMENTS	STATUS
B	12/05/2023	M.KH	M.KH	DR.M.M	ISSUED FOR INFORMATION	IFI
A	11/20/2022	M.KH	M.KH	DR.M.M	ISSUED FOR INFORMATION	IFI

DRAWING TITLE
6TH OF OCTOBER MONORAIL
SERVICE WALKWAYS
ZONE (1008)
Z8-HR091

Project Code	Rubric	Initiator	Lot	Ref	Number	Revision
93M	047	6ACC	60DEP	DWG	0833	B

Tekla structures

approval is subject to approval of coordination package between multi-discipline

REVIEWED WITH COMMENT
MONORAILS PROJECT

MATERIAL LIST FOR ASSEMBLY MK'D **Z8-HR092**

Mark	Profile	GRADE	No.	Length	Area	Weight
Z8-HR092	CHS48.3*4.0	S235JR	1	5450	0.82	23.83
W363	ROD12	S355JR	54	902	0.03	0.72
W389	CHS48.3*4.0	S235JR	1	1162	0.17	5.08
W396	PIPE2SCH40	S235JR	5	25	0.01	0.14
W401	CHS48.3*4.0	S235JR	4	1162	0.17	5.08
W475	PL10*25	S355JR	5	77	0.01	0.15
W592	CHS48.3*4.0	S235JR	4	996	0.15	4.36
W742	PL12*65	S355JR	2	190	0.03	1.16
W758	CHS48.3*4.0	S235JR	1	328	0.05	1.43
W759	CHS48.3*4.0	S235JR	1	1119	0.17	4.89
W760	PL12*65	S355JR	2	190	0.03	1.16
W761	PL12*65	S355JR	1	190	0.03	1.16
				Total	4.51	119.14

BOLT LIST:-

BOLT \ STUD	BOLT DESCRIPTION	QTY	FINISH
BOLT	B1N2W 16 X 50 A325M	10	

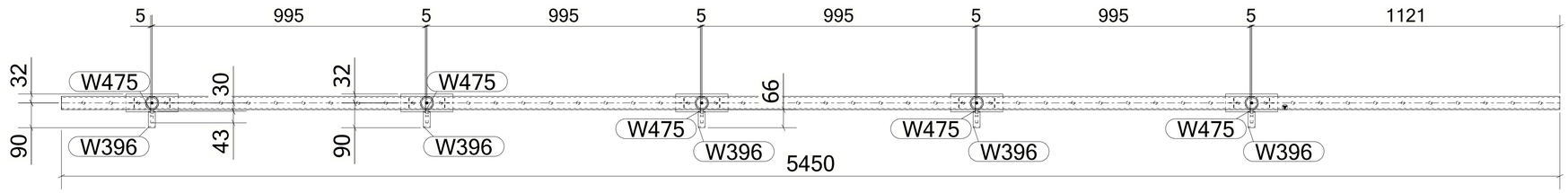

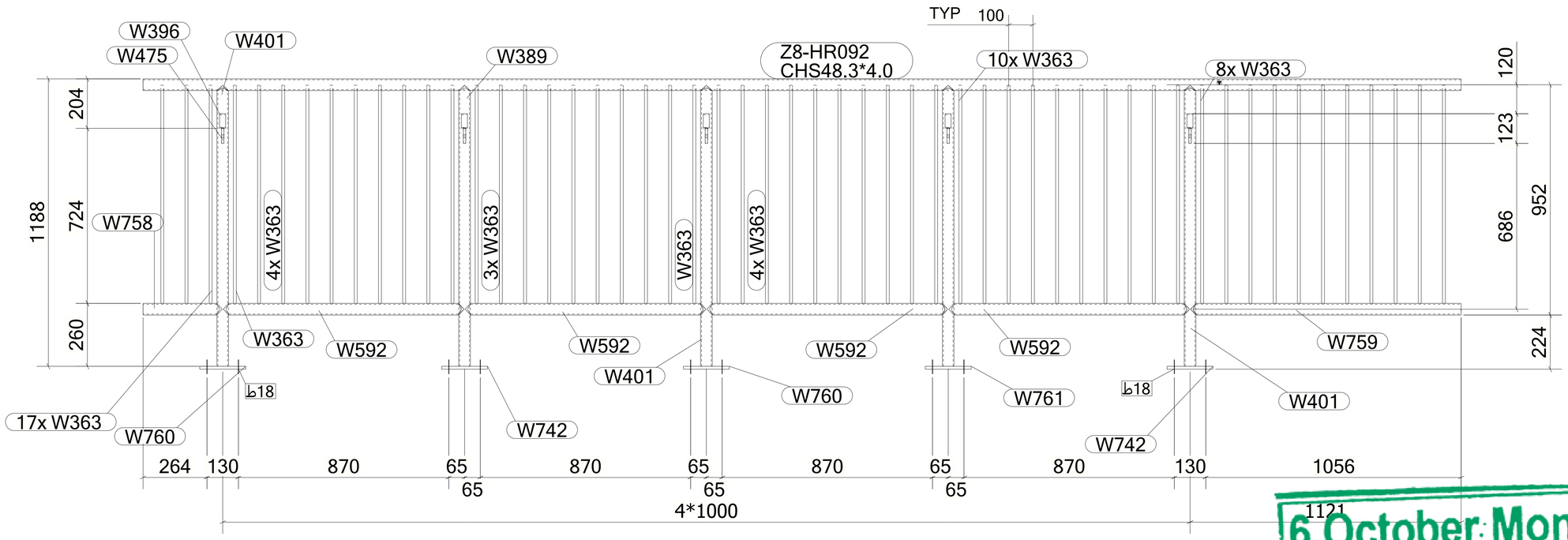

1 *REQUIRED AS DRAWN MARKED* **Z8-HR092**

GENERAL NOTES:

1. THE DIMENSIONS SHOWN ARE NOMINAL (IN MILLIMETERS), U.N.O.
2. WELD SIZESHALL BE AISC MINIMUM OF 6 mm UNLESS NOTED OTHERWISE.
3. ALL FIELD WELDS SHALL BE INSPECTED PER QUALITY ASSURANCE AND SPECIAL INSPECTIONS.

REFERENCE DRAWINGS

1	93M-BOA-NAT-LOT-04833
2	93M-BOA-NAT-LOT-09170
3	93M-BOA-NAT-LOT-01976
4	93M-BOA-NAT-LOT-20021
5	
6	
7	
8	
9	

6TH OF OCTOBER CITY RAIL TRANSIT MONORAIL

The Authority | Consultant: Hill International | Main Contractor: ORASCOM CONSTRUCTION, Six Construct, BOMBARDIER | Structural Designer: INNOVA TRANSPORTATION

KEY PLAN:

6 October Monorail
Engineering Unit
Valid For Construction

SCALE	SHOPDRAWING	DATE
AS SHOWN		12/05/2023

REV	DATE	DSG.	CHK.	APP.	AMENDMENTS	STATUS
B	12/05/2023	M.KH	M.KH	DR.M.M	ISSUED FOR INFORMATION	IFI
A	11/20/2022	M.KH	M.KH	DR.M.M	ISSUED FOR INFORMATION	IFI

DRAWING TITLE
6TH OF OCTOBER MONORAIL
SERVICE WALKWAYS
ZONE (1008)
Z8-HR092

Project Code	Rubric	Initiator	Lot	Ref	Number	Revision
93M	047	6ACC	60DE	PDWG	0833	B

Tekla structures

approval is subject to approval of coordination package between multi-discipline

REVIEWED WITH COMMENT
MONORAILS PROJECT

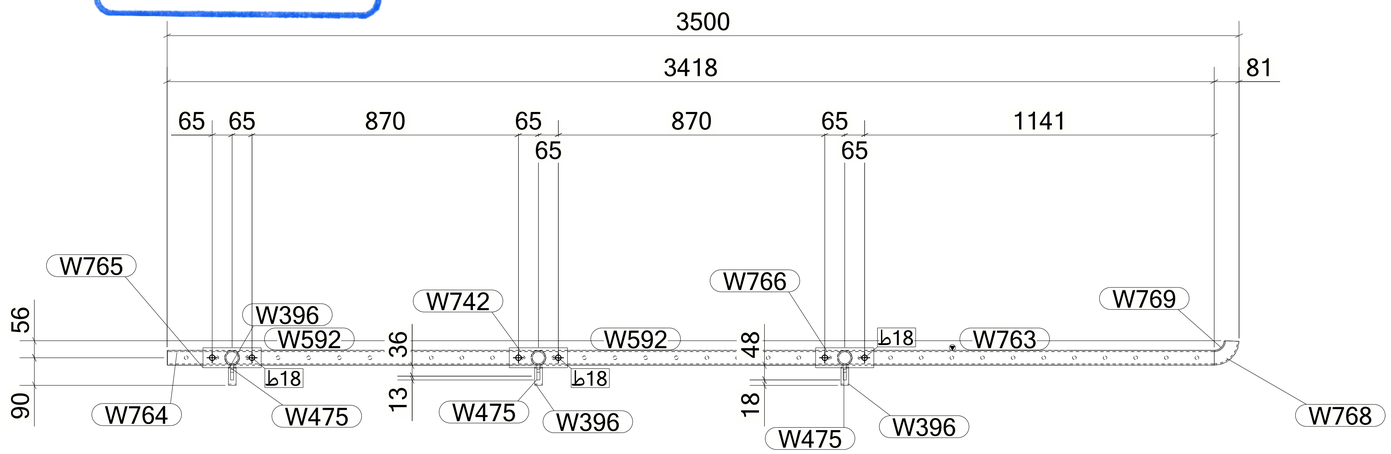

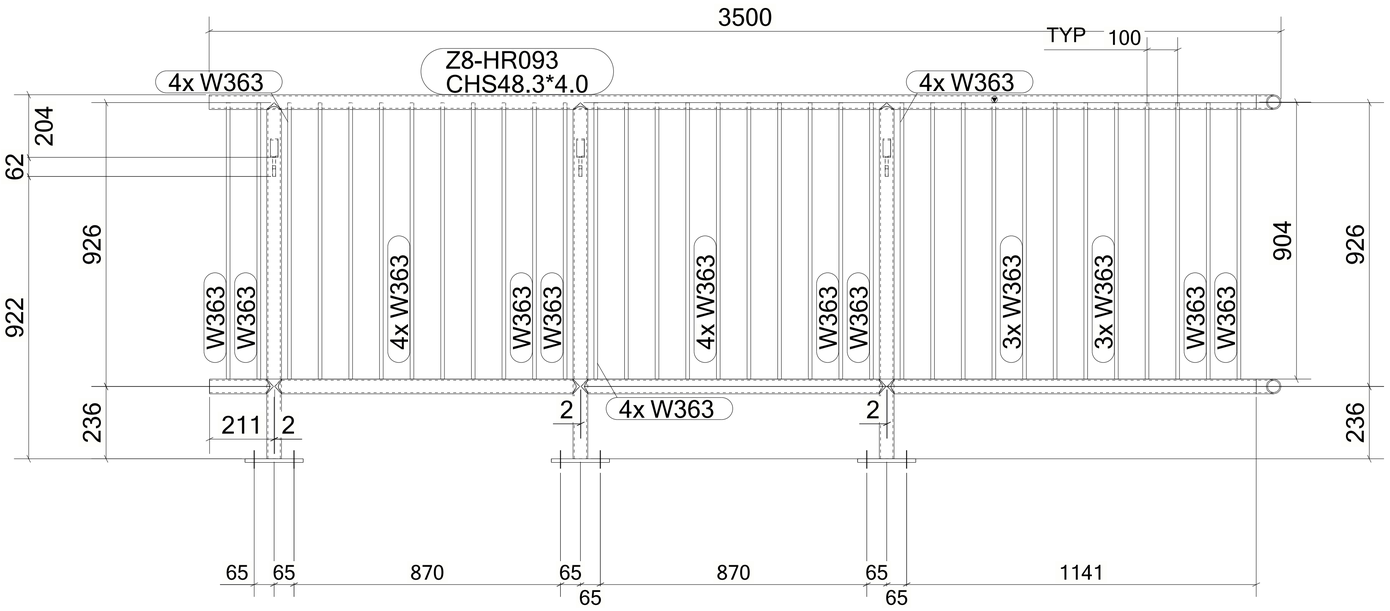

MATERIAL LIST FOR ASSEMBLY MK'D **Z8-HR093**

Mark	Profile	GRADE	No.	Length	Area	Weight
Z8-HR093	CHS48.3*4.0	S235JR	1	3418	0.51	14.95
W363	ROD12	S355JR	34	902	0.03	0.72
W396	PIPE2SCH40	S235JR	3	25	0.01	0.14
W401	CHS48.3*4.0	S235JR	3	1162	0.17	5.08
W475	PL10*25	S355JR	3	78	0.01	0.15
W592	CHS48.3*4.0	S235JR	2	996	0.15	4.36
W742	PL12*65	S355JR	1	190	0.03	1.16
W763	CHS48.3*4.0	S235JR	1	1204	0.18	5.27
W764	CHS48.3*4.0	S235JR	1	209	0.03	0.91
W765	PL12*65	S355JR	1	190	0.03	1.16
W766	PL12*65	S355JR	1	190	0.03	1.16
W768	CHS48.3*4.0	S235JR	1	87	0.01	0.38
W769	CHS48.3*4.0	S355-JR	1	87	0.01	0.38
				Total	2.83	74.70

BOLT LIST:-

BOLT \ STUD	BOLT DESCRIPTION		QTY	FINISH
BOLT	B1N2W 16 X 50	A325M	6	

1 *REQUIRED AS DRAWN MARKED* **Z8-HR093**

GENERAL NOTES:

1. THE DIMENSIONS SHOWN ARE NOMINAL (IN MILLIMETERS), U.N.O.
2. WELD SIZESHALL BE AISC MINIMUM OF 6 mm UNLESS NOTED OTHERWISE.
3. ALL FIELD WELDS SHALL BE INSPECTED PER QUALITY ASSURANCE AND SPECIAL INSPECTIONS.

REFERENCE DRAWINGS

1	93M-BOA-NAT-LOT-04833
2	93M-BOA-NAT-LOT-09170
3	93M-BOA-NAT-LOT-01976
4	93M-BOA-NAT-LOT-20021
5	
6	
7	
8	
9	

6TH OF OCTOBER CITY RAIL TRANSIT MONORAIL

The Authority | Consultant: Hill International | Main Contractor: ORASCOM CONSTRUCTION / BOMBARDIER | Structural Designer: INNOVA TRANSPORTATION

KEY PLAN:

6 October Monorail
Engineering Unit
Valid For Construction

SCALE	SHOPDRAWING	DATE
AS SHOWN		12/05/2023

REV	DATE	DSG.	CHK.	APP.	AMENDMENTS	STATUS
B	12/05/2023	M.KH	M.KH	DR.M.M	ISSUED FOR INFORMATION	IFI
A	11/20/2022	M.KH	M.KH	DR.M.M	ISSUED FOR INFORMATION	IFI

DRAWING TITLE
6TH OF OCTOBER MONORAIL
SERVICE WALKWAYS
ZONE (1008)
Z8-HR093

Project Code	Rubric	Initiator	Lot	Ref	Number	Revision
93M	047	ACC	60DEP	DWG	0833	B

Tekla structures

approval is subject to approval of coordination package between multi-discipline

REVIEWED WITH COMMENT
MONORAILS PROJECT

MATERIAL LIST FOR ASSEMBLY MK'D **Z8-HR094**

Mark	Profile	GRADE	No.	Length	Area	Weight
Z8-HR094	CHS48.3*4.0	S235JR	1	3477	0.52	15.20
W768	CHS48.3*4.0	S235JR	1	87	0.01	0.38
				Total	0.53	15.58

BOLT LIST:-

BOLT \ STUD	BOLT DESCRIPTION	QTY	FINISH

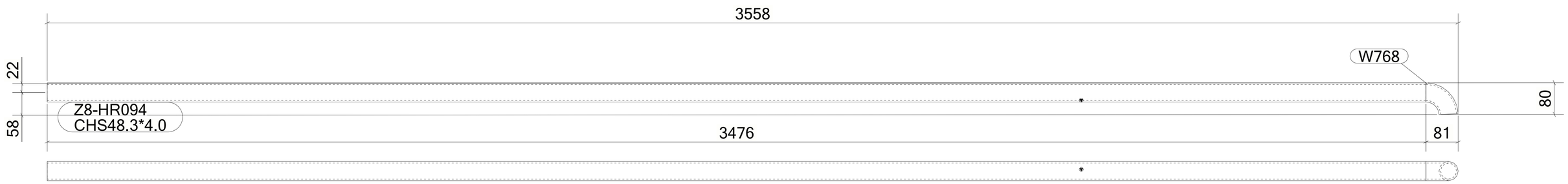

1 *REQUIRED AS DRAWN MARKED* **Z8-HR094**

6 October Monorail
Engineering Unit
Valid For Construction

GENERAL NOTES:

1. THE DIMENSIONS SHOWN ARE NOMINAL (IN MILLIMETERS), U.N.O.
2. WELD SIZESHALL BE AISC MINIMUM OF 6 mm UNLESS NOTED OTHERWISE.
3. ALL FIELD WELDS SHALL BE INSPECTED PER QUALITY ASSURANCE AND SPECIAL INSPECTIONS.

REFERENCE DRAWINGS

1	93M-BOA-NAT-LOT-04833
2	93M-BOA-NAT-LOT-09170
3	93M-BOA-NAT-LOT-01976
4	93M-BOA-NAT-LOT-20021
5	
6	
7	
8	
9	

6TH OF OCTOBER CITY RAIL TRANSIT MONORAIL

The Authority — Hill International Consultant — Main Contractor — Structural Designer

KEY PLAN:

REV	DATE	DSG.	CHK.	APP.	AMENDMENTS	STATUS
B	12/05/2023	M.KH	M.KH	DR.M.M	ISSUED FOR INFORMATION	IFI
A	11/20/2022	M.KH	M.KH	DR.M.M	ISSUED FOR INFORMATION	IFI

SCALE: AS SHOWN | SHOPDRAWING | DATE: 12/05/2023

DRAWING TITLE
6TH OF OCTOBER MONORAIL
SERVICE WALKWAYS
ZONE (1008)
Z8-HR094

Project Code	Rubric	Initiator	Lot	Ref	Number	Revision
93	M047	6ACC	60DE	PDWG	0835	B

Tekla structures

approval is subject to approval of coordination package between multi-discipline

REVIEWED WITH COMMENT
MONORAILS PROJECT

MATERIAL LIST FOR ASSEMBLY MK'D **Z8-HR095**

Mark	Profile	GRADE	No.	Length	Area	Weight
Z8-HR095	CHS48.3*4.0	S235JR	1	5967	0.90	26.09
W159	ROD32	S235JR	2	100	0.01	0.60
W388	CHS48.3*4.0	S235JR	1	1132	0.17	4.95
W396	PIPE2SCH40	S235JR	6	25	0.01	0.14
W401	CHS48.3*4.0	S235JR	5	1162	0.17	5.08
W473	CHS48.3*4.0	S235JR	3	996	0.15	4.36
W475	PL10*25	S355JR	6	77	0.01	0.15
W516	PL12*65	S355JR	1	190	0.03	1.16
W517	PL12*65	S355JR	2	190	0.03	1.16
W520	PL12*65	S355JR	1	190	0.03	1.16
W592	CHS48.3*4.0	S235JR	1	996	0.15	4.36
W593	ROD12	S355JR	59	880	0.03	0.70
W594	CHS48.3*4.0	S235JR	1	1162	0.17	5.08
W595	CHS48.3*4.0	S235JR	1	262	0.04	1.14
W761	PL12*65	S355JR	1	190	0.03	1.16
W770	CHS48.3*4.0	S235JR	1	566	0.08	2.47
W775	PL12*65	S355JR	1	190	0.03	1.16
				Total	5.03	133.94

BOLT LIST:-

BOLT \ STUD	BOLT DESCRIPTION	QTY	FINISH
BOLT	B1N2W 16 X 50 A325M	12	

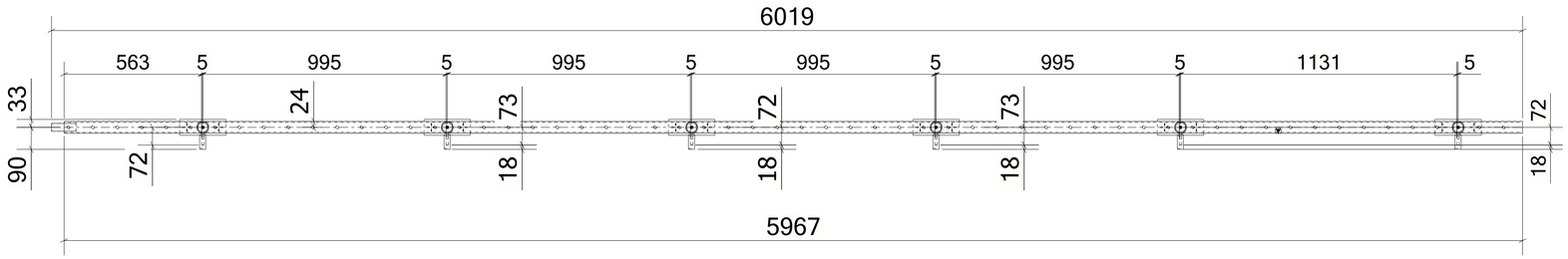

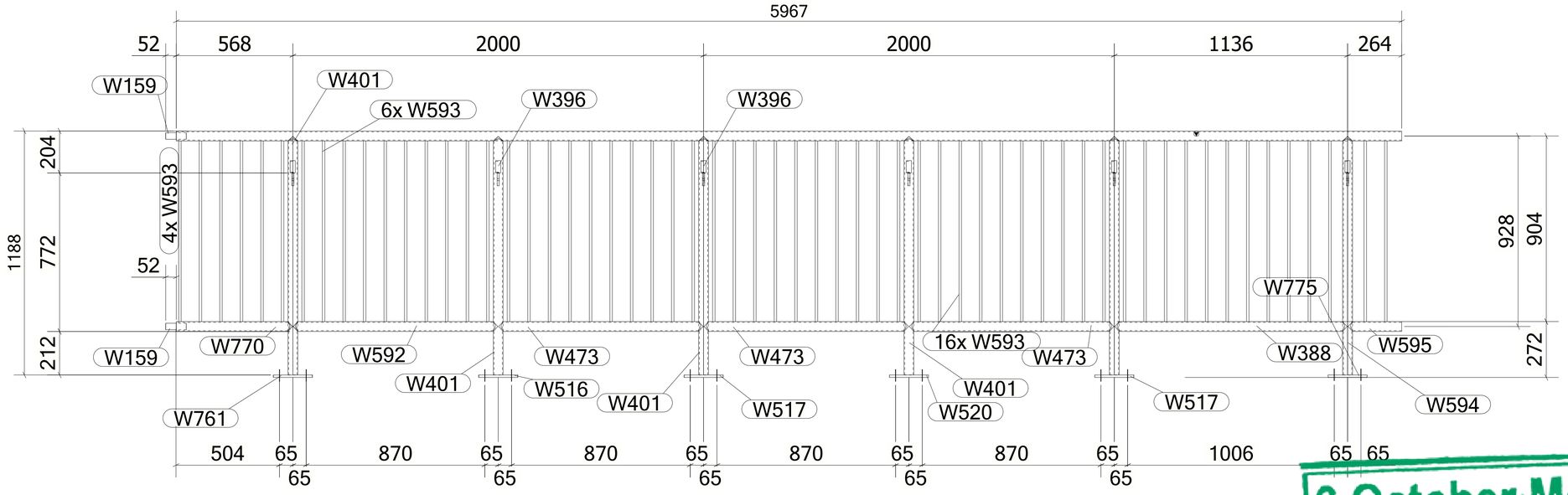

1 *REQUIRED AS DRAWN MARKED* **Z8-HR095**

6 October Monorail
Engineering Unit
Valid For Construction

GENERAL NOTES:

1. THE DIMENSIONS SHOWN ARE NOMINAL (IN MILLIMETERS), U.N.O.
2. WELD SIZESHALL BE AISC MINIMUM OF 6 mm UNLESS NOTED OTHERWISE.
3. ALL FIELD WELDS SHALL BE INSPECTED PER QUALITY ASSURANCE AND SPECIAL INSPECTIONS.

REFERENCE DRAWINGS

1	93M-BOA-NAT-LOT-04833
2	93M-BOA-NAT-LOT-09170
3	93M-BOA-NAT-LOT-01976
4	93M-BOA-NAT-LOT-20021
5	
6	
7	
8	
9	

6TH OF OCTOBER CITY RAIL TRANSIT MONORAIL

The Authority | Consultant: Hill International | Main Contractor: ORASCOM CONSTRUCTION, BOMBARDIER | Structural Designer: INNOVA TRANSPORTATION

KEY PLAN:

SCALE: AS SHOWN | SHOPDRAWING | DATE: 12/05/2023

REV	DATE	DSG.	CHK.	APP.	AMENDMENTS	STATUS
B	12/05/2023	M.KH	M.KH	DR.M.M	ISSUED FOR INFORMATION	IFI
A	11/20/2022	M.KH	M.KH	DR.M.M	ISSUED FOR INFORMATION	IFI

DRAWING TITLE
6TH OF OCTOBER MONORAIL
SERVICE WALKWAYS
ZONE (1008)
Z8-HR095

Project Code	Rubric	Initiator	Lot	Ref	Number	Revision
93M	047	6ACC	60DE	PDWG	08336	B

Tekla structures

approval is subject to approval of coordination package between multi-discipline

REVIEWED WITH COMMENT
MONORAILS PROJECT

MATERIAL LIST FOR ASSEMBLY MK'D **Z8-HR096**

Mark	Profile	GRADE	No.	Length	Area	Weight
Z8-HR096	CHS48.3*4.0	S235JR	1	5906	0.89	25.82
W159	ROD32	S235JR	1	100	0.01	0.60
				Total	0.90	26.42

BOLT LIST:-

BOLT \ STUD	BOLT DESCRIPTION	QTY	FINISH

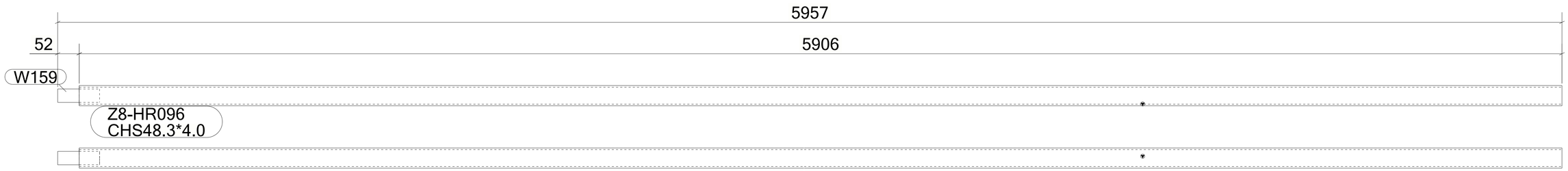

1 *REQUIRED AS DRAWN MARKED* **Z8-HR096**

6 October Monorail
Engineering Unit
Valid For Construction

GENERAL NOTES:

1. THE DIMENSIONS SHOWN ARE NOMINAL (IN MILLIMETERS), U.N.O.
2. WELD SIZESHALL BE AISC MINIMUM OF 6 mm UNLESS NOTED OTHERWISE.
3. ALL FIELD WELDS SHALL BE INSPECTED PER QUALITY ASSURANCE AND SPECIAL INSPECTIONS.

REFERENCE DRAWINGS

1	93M-BOA-NAT-LOT-04833
2	93M-BOA-NAT-LOT-09170
3	93M-BOA-NAT-LOT-01976
4	93M-BOA-NAT-LOT-20021
5	
6	
7	
8	
9	

6TH OF OCTOBER CITY RAIL TRANSIT MONORAIL

The Authority | Hill International Consultant | Main Contractor | Structural Designer

KEY PLAN:

SCALE: AS SHOWN | SHOPDRAWING | DATE: 12/05/2023

REV	DATE	DSG.	CHK.	APP.	AMENDMENTS	STATUS
B	12/05/2023	M.KH	M.KH	DR.M.M	ISSUED FOR INFORMATION	IFI
A	11/20/2022	M.KH	M.KH	DR.M.M	ISSUED FOR INFORMATION	IFI

DRAWING TITLE
6TH OF OCTOBER MONORAIL
SERVICE WALKWAYS
ZONE (1008)
Z8-HR096

Project Code	Rubric	Initiator	Lot	Ref	Number	Revision
9 3 M	0 4 7 6	A C C	6 0 D E P	D W G	0 8 3 3 7	B

Tekla structures

approval is subject to approval of coordination package between multi-discipline

REVIEWED WITH COMMENT
MONORAILS PROJECT

MATERIAL LIST FOR ASSEMBLY MK'D **Z8-HR097**

Mark	Profile	GRADE	No.	Length	Area	Weight
Z8-HR097	CHS48.3*4.0	S235JR	1	2095	0.31	9.16
W159	ROD32	S235JR	1	100	0.01	0.60
				Total	0.33	9.76

BOLT LIST:-

BOLT \ STUD	BOLT DESCRIPTION	QTY	FINISH

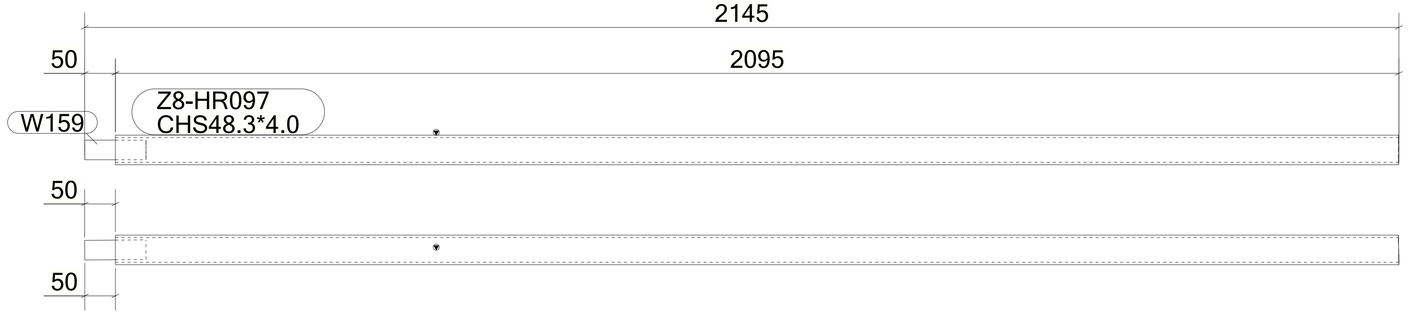

1 *REQUIRED AS DRAWN MARKED* **Z8-HR097**

6 October Monorail
Engineering Unit
Valid For Construction

GENERAL NOTES:

1. THE DIMENSIONS SHOWN ARE NOMINAL (IN MILLIMETERS), U.N.O.
2. WELD SIZESHALL BE AISC MINIMUM OF 6 mm UNLESS NOTED OTHERWISE.
3. ALL FIELD WELDS SHALL BE INSPECTED PER QUALITY ASSURANCE AND SPECIAL INSPECTIONS.

REFERENCE DRAWINGS

1	93M-BOA-NAT-LOT-04833
2	93M-BOA-NAT-LOT-09170
3	93M-BOA-NAT-LOT-01976
4	93M-BOA-NAT-LOT-20021
5	
6	
7	
8	
9	

6TH OF OCTOBER CITY RAIL TRANSIT MONORAIL

The Authority — Consultant: Hill International — Main Contractor: ORASCOM CONSTRUCTION / BOMBARDIER — Structural Designer: INNOVA TRANSPORTATION

KEY PLAN:

SCALE: AS SHOWN | SHOPDRAWING | DATE: 12/05/2023

REV	DATE	DSG.	CHK.	APP.	AMENDMENTS	STATUS
B	12/05/2023	M.KH	M.KH	DR.M.M	ISSUED FOR INFORMATION	IFI
A	11/20/2022	M.KH	M.KH	DR.M.M	ISSUED FOR INFORMATION	IFI

DRAWING TITLE
6TH OF OCTOBER MONORAIL
SERVICE WALKWAYS
ZONE (1008)
Z8-HR097

Project Code	Rubric	Initiator	Lot	Ref	Number	Revision
93M	476	ACC	60DEP	DWG	08338	B

Tekla structures

approval is subject to approval of coordination package between multi-discipline

REVIEWED WITH COMMENT
MONORAILS PROJECT

MATERIAL LIST FOR ASSEMBLY MK'D **Z8-HR098**

Mark	Profile	GRADE	No.	Length	Area	Weight
Z8-HR098	CHS48.3*4.0	S235JR	1	777	0.12	3.40
W315	PL3*45	S355JR	1	45	0.00	0.03
				Total	0.12	3.43

BOLT LIST:-

BOLT \ STUD	BOLT DESCRIPTION	QTY	FINISH

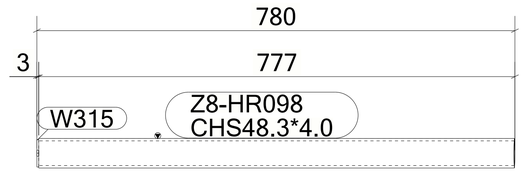

1 *REQUIRED AS DRAWN MARKED* **Z8-HR098**

GENERAL NOTES:

1. THE DIMENSIONS SHOWN ARE NOMINAL (IN MILLIMETERS), U.N.O.
2. WELD SIZESHALL BE AISC MINIMUM OF 6 mm UNLESS NOTED OTHERWISE.
3. ALL FIELD WELDS SHALL BE INSPECTED PER QUALITY ASSURANCE AND SPECIAL INSPECTIONS.

REFERENCE DRAWINGS

1	93M-BOA-NAT-LOT-04833
2	93M-BOA-NAT-LOT-09170
3	93M-BOA-NAT-LOT-01976
4	93M-BOA-NAT-LOT-20021
5	
6	
7	
8	
9	

6TH OF OCTOBER CITY RAIL TRANSIT MONORAIL

The Authority — Consultant — Main Contractor — Structural Designer

KEY PLAN:

6 October Monorail
Engineering Unit
Valid For Construction

SCALE: AS SHOWN | SHOPDRAWING | DATE: 12/05/2023

REV	DATE	DSG.	CHK.	APP.	AMENDMENTS	STATUS
B	12/05/2023	M.KH	M.KH	DR.M.M	ISSUED FOR INFORMATION	IFI
A	11/20/2022	M.KH	M.KH	DR.M.M	ISSUED FOR INFORMATION	IFI

DRAWING TITLE
6TH OF OCTOBER MONORAIL
SERVICE WALKWAYS
ZONE (1008)
Z8-HR098

Project Code	Rubric	Initiator	Lot	Ref	Number	Revision
93M	047	6ACC	60DE	PDWG	08339	B

Tekla structures

approval is subject to approval of coordination package between multi-discipline

REVIEWED WITH COMMENT
MONORAILS PROJECT

MATERIAL LIST FOR ASSEMBLY MK'D **Z8-HR099**

Mark	Profile	GRADE	No.	Length	Area	Weight
Z8-HR099	CHS48.3*4.0	S235JR	1	2267	0.34	9.91
W159	ROD32	S235JR	1	100	0.01	0.60
				Total	0.35	10.52

BOLT LIST:-

BOLT \ STUD	BOLT DESCRIPTION	QTY	FINISH

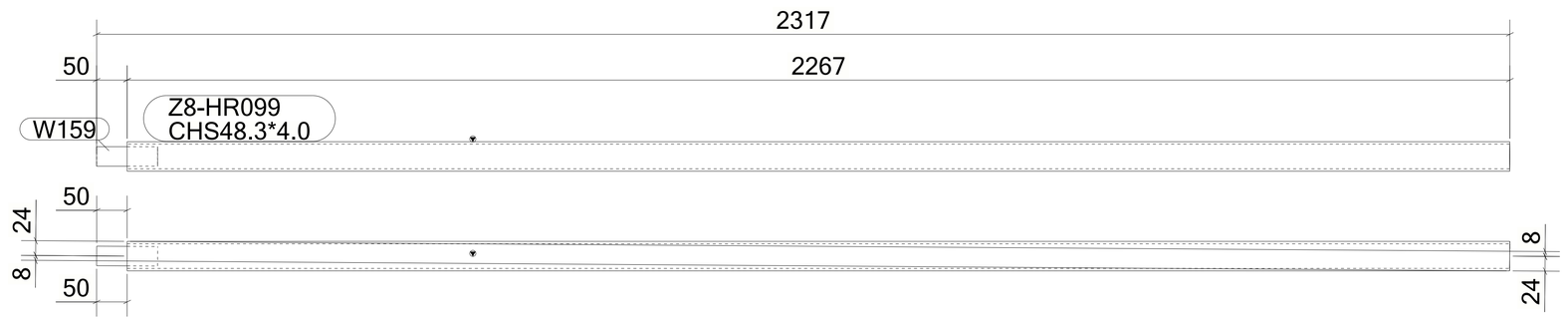

1 *REQUIRED AS DRAWN MARKED* **Z8-HR099**

6 October Monorail
Engineering Unit
Valid For Construction

GENERAL NOTES:

1. THE DIMENSIONS SHOWN ARE NOMINAL (IN MILLIMETERS), U.N.O.
2. WELD SIZESHALL BE AISC MINIMUM OF 6 mm UNLESS NOTED OTHERWISE.
3. ALL FIELD WELDS SHALL BE INSPECTED PER QUALITY ASSURANCE AND SPECIAL INSPECTIONS.

REFERENCE DRAWINGS

1	93M-BOA-NAT-LOT-04833
2	93M-BOA-NAT-LOT-09170
3	93M-BOA-NAT-LOT-01976
4	93M-BOA-NAT-LOT-20021
5	
6	
7	
8	
9	

6TH OF OCTOBER CITY RAIL TRANSIT MONORAIL

The Authority | Hill International Consultant | Main Contractor | Structural Designer

KEY PLAN:

SCALE	SHOPDRAWING	DATE
AS SHOWN		12/05/2023

REV	DATE	DSG.	CHK.	APP.	AMENDMENTS	STATUS
B	12/05/2023	M.KH	M.KH	DR.M.M	ISSUED FOR INFORMATION	IFI
A	11/20/2022	M.KH	M.KH	DR.M.M	ISSUED FOR INFORMATION	IFI

DRAWING TITLE
6TH OF OCTOBER MONORAIL
SERVICE WALKWAYS
ZONE (1008)
Z8-HR099

Project Code	Rubric	Initiator	Lot	Ref	Number	Revision
93M047	6ACC60	DEP	DWG	08340		B

Tekla structures

approval is subject to approval of coordination package between multi-discipline

REVIEWED WITH COMMENT
MONORAILS PROJECT

MATERIAL LIST FOR ASSEMBLY MK'D **Z8-HR100**

Mark	Profile	GRADE	No.	Length	Area	Weight
Z8-HR100	CHS48.3*4.0	S235JR	1	3151	0.47	13.78
W159	ROD32	S235JR	1	100	0.01	0.60
				Total	0.48	14.38

BOLT LIST:-

BOLT \ STUD	BOLT DESCRIPTION	QTY	FINISH

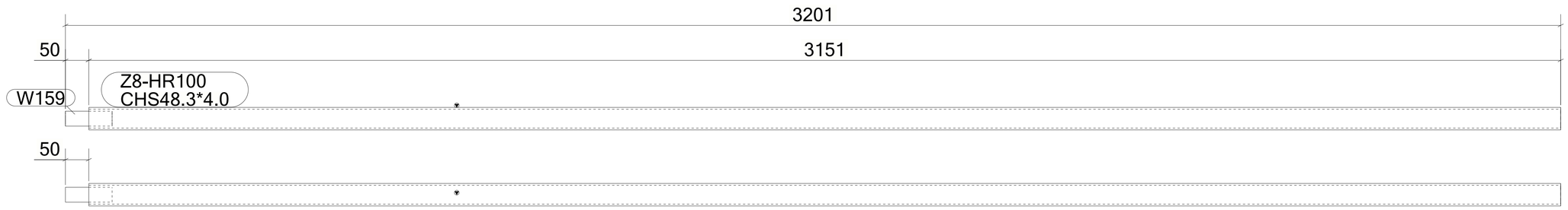

1 *REQUIRED AS DRAWN MARKED* **Z8-HR100**

6 October Monorail
Engineering Unit
Valid For Construction

GENERAL NOTES:

1. THE DIMENSIONS SHOWN ARE NOMINAL (IN MILLIMETERS), U.N.O.
2. WELD SIZESHALL BE AISC MINIMUM OF 6 mm UNLESS NOTED OTHERWISE.
3. ALL FIELD WELDS SHALL BE INSPECTED PER QUALITY ASSURANCE AND SPECIAL INSPECTIONS.

REFERENCE DRAWINGS

1	93M-BOA-NAT-LOT-04833
2	93M-BOA-NAT-LOT-09170
3	93M-BOA-NAT-LOT-01976
4	93M-BOA-NAT-LOT-20021
5	
6	
7	
8	
9	

6TH OF OCTOBER CITY RAIL TRANSIT MONORAIL

The Authority | Hill International Consultant | Main Contractor | Structural Designer

KEY PLAN:

SCALE: AS SHOWN | SHOPDRAWING | DATE: 12/05/2023

REV	DATE	DSG.	CHK.	APP.	AMENDMENTS	STATUS
B	12/05/2023	M.KH	M.KH	DR.M.M	ISSUED FOR INFORMATION	IFI
A	11/20/2022	M.KH	M.KH	DR.M.M	ISSUED FOR INFORMATION	IFI

DRAWING TITLE
6TH OF OCTOBER MONORAIL
SERVICE WALKWAYS
ZONE (1008)
Z8-HR100

Project Code	Rubric	Initiator	Lot	Ref	Number	Revision
9 3	M 0 4 7 6	A C C	6 0 D E P	D W G	0 8 3 4 1	B

Tekla structures

approval is subject to approval of coordination package between multi-discipline

REVIEWED WITH COMMENT
MONORAILS PROJECT

MATERIAL LIST FOR ASSEMBLY MK'D **Z8-HR101**

Mark	Profile	GRADE	No.	Length	Area	Weight
Z8-HR101	CHS48.3*4.0	S235JR	1	3144	0.47	13.75
W159	ROD32	S235JR	1	100	0.01	0.60
				Total	0.48	14.35

BOLT LIST:-

BOLT \ STUD	BOLT DESCRIPTION	QTY	FINISH

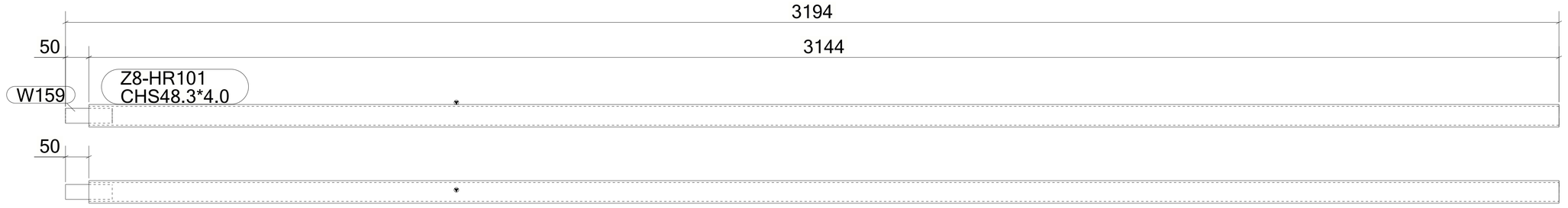

2 *REQUIRED AS DRAWN MARKED* **Z8-HR101**

6 October Monorail
Engineering Unit
Valid For Construction

GENERAL NOTES:

1. THE DIMENSIONS SHOWN ARE NOMINAL (IN MILLIMETERS), U.N.O.
2. WELD SIZESHALL BE AISC MINIMUM OF 6 mm UNLESS NOTED OTHERWISE.
3. ALL FIELD WELDS SHALL BE INSPECTED PER QUALITY ASSURANCE AND SPECIAL INSPECTIONS.

REFERENCE DRAWINGS

1	93M-BOA-NAT-LOT-04833
2	93M-BOA-NAT-LOT-09170
3	93M-BOA-NAT-LOT-01976
4	93M-BOA-NAT-LOT-20021
5	
6	
7	
8	
9	

6TH OF OCTOBER CITY RAIL TRANSIT MONORAIL

The Authority — Hill International Consultant — Main Contractor — Structural Designer

KEY PLAN:

SCALE: AS SHOWN | SHOPDRAWING | DATE: 12/05/2023

REV	DATE	DSG.	CHK.	APP.	AMENDMENTS	STATUS
B	12/05/2023	M.KH	M.KH	DR.M.M	ISSUED FOR INFORMATION	IFI
A	11/20/2022	M.KH	M.KH	DR.M.M	ISSUED FOR INFORMATION	IFI

DRAWING TITLE
6TH OF OCTOBER MONORAIL
SERVICE WALKWAYS
ZONE (1008)
Z8-HR101

Project Code	Rubric	Initiator	Lot	Ref	Number	Revision
9 3 M	0 4 7 6	A C C	6 0 D E P	D W G	0 8 3 4 2	B

Tekla structures

approval is subject to approval of coordination package between multi-discipline

REVIEWED WITH COMMENT
MONORAILS PROJECT

MATERIAL LIST FOR ASSEMBLY MK'D **Z8-HR102**

Mark	Profile	GRADE	No.	Length	Area	Weight
Z8-HR102	CHS48.3*4.0	S235JR	1	3140	0.47	13.73
W159	ROD32	S235JR	1	100	0.01	0.60
				Total	0.48	14.33

BOLT LIST:-

BOLT \ STUD	BOLT DESCRIPTION	QTY	FINISH

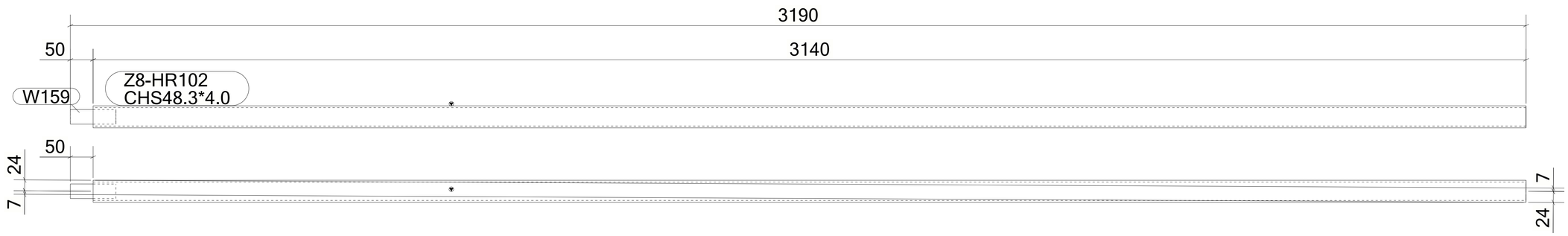

1 *REQUIRED AS DRAWN MARKED* **Z8-HR102**

6 October Monorail
Engineering Unit
Valid For Construction

GENERAL NOTES:

1. THE DIMENSIONS SHOWN ARE NOMINAL (IN MILLIMETERS), U.N.O.
2. WELD SIZESHALL BE AISC MINIMUM OF 6 mm UNLESS NOTED OTHERWISE.
3. ALL FIELD WELDS SHALL BE INSPECTED PER QUALITY ASSURANCE AND SPECIAL INSPECTIONS.

REFERENCE DRAWINGS

1	93M-BOA-NAT-LOT-04833
2	93M-BOA-NAT-LOT-09170
3	93M-BOA-NAT-LOT-01976
4	93M-BOA-NAT-LOT-20021
5	
6	
7	
8	
9	

6TH OF OCTOBER CITY RAIL TRANSIT MONORAIL

The Authority | Hill International Consultant | Main Contractor | Structural Designer

KEY PLAN:

SCALE: AS SHOWN | SHOPDRAWING | DATE: 12/05/2023

REV	DATE	DSG.	CHK.	APP.	AMENDMENTS	STATUS
B	12/05/2023	M.KH	M.KH	DR.M.M	ISSUED FOR INFORMATION	IFI
A	11/20/2022	M.KH	M.KH	DR.M.M	ISSUED FOR INFORMATION	IFI

DRAWING TITLE
6TH OF OCTOBER MONORAIL
SERVICE WALKWAYS
ZONE (1008)
Z8-HR102

Project Code	Rubric	Initiator	Lot	Ref	Number	Revision
9 3	M 0 4 7 6	A C C	6 0 D E P	D W G	0 8 3 4 3	B

Tekla structures

approval is subject to approval of coordination package between multi-discipline

REVIEWED WITH COMMENT
MONORAILS PROJECT

MATERIAL LIST FOR ASSEMBLY MK'D **Z8-HR103**

Mark	Profile	GRADE	No.	Length	Area	Weight
Z8-HR103	CHS48.3*4.0	S235JR	1	2273	0.34	9.94
W159	ROD32	S235JR	1	100	0.01	0.60
				Total	0.35	10.54

BOLT LIST:-

BOLT \ STUD	BOLT DESCRIPTION	QTY	FINISH

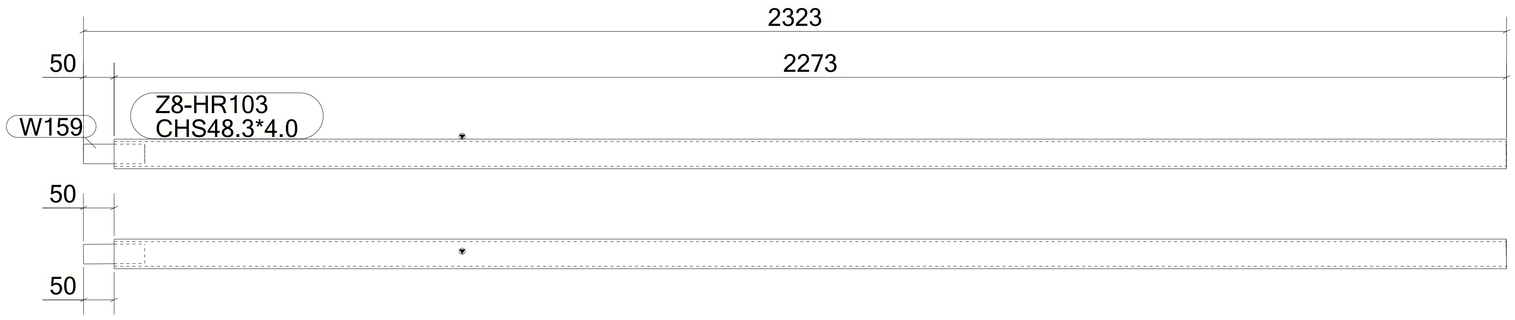

1 *REQUIRED AS DRAWN MARKED* **Z8-HR103**

6 October Monorail
Engineering Unit
Valid For Construction

GENERAL NOTES:

1. THE DIMENSIONS SHOWN ARE NOMINAL (IN MILLIMETERS), U.N.O.
2. WELD SIZESHALL BE AISC MINIMUM OF 6 mm UNLESS NOTED OTHERWISE.
3. ALL FIELD WELDS SHALL BE INSPECTED PER QUALITY ASSURANCE AND SPECIAL INSPECTIONS.

REFERENCE DRAWINGS

1	93M-BOA-NAT-LOT-04833
2	93M-BOA-NAT-LOT-09170
3	93M-BOA-NAT-LOT-01976
4	93M-BOA-NAT-LOT-20021
5	
6	
7	
8	
9	

6TH OF OCTOBER CITY RAIL TRANSIT MONORAIL

The Authority | Consultant: Hill International | Main Contractor: ORASCOM CONSTRUCTION, BOMBARDIER | Structural Designer: INNOVA TRANSPORTATION

KEY PLAN:

SCALE: AS SHOWN | SHOPDRAWING | DATE: 12/05/2023

REV	DATE	DSG.	CHK.	APP.	AMENDMENTS	STATUS
B	12/05/2023	M.KH	M.KH	DR.M.M	ISSUED FOR INFORMATION	IFI
A	11/20/2022	M.KH	M.KH	DR.M.M	ISSUED FOR INFORMATION	IFI

DRAWING TITLE
6TH OF OCTOBER MONORAIL
SERVICE WALKWAYS
ZONE (1008)
Z8-HR103

Project Code	Rubric	Initiator	Lot	Ref	Number	Revision
93M	047	6ACC	60DE	PDWG	0834	B

Tekla structures

approval is subject to approval of coordination package between multi-discipline

REVIEWED WITH COMMENT
MONORAILS PROJECT

MATERIAL LIST FOR ASSEMBLY MK'D **Z8-HR104**

Mark	Profile	GRADE	No.	Length	Area	Weight
Z8-HR104	CHS48.3*4.0	S235JR	1	2098	0.31	9.17
W159	ROD32	S235JR	1	100	0.01	0.60
				Total	0.33	9.77

BOLT LIST:-

BOLT \ STUD	BOLT DESCRIPTION	QTY	FINISH

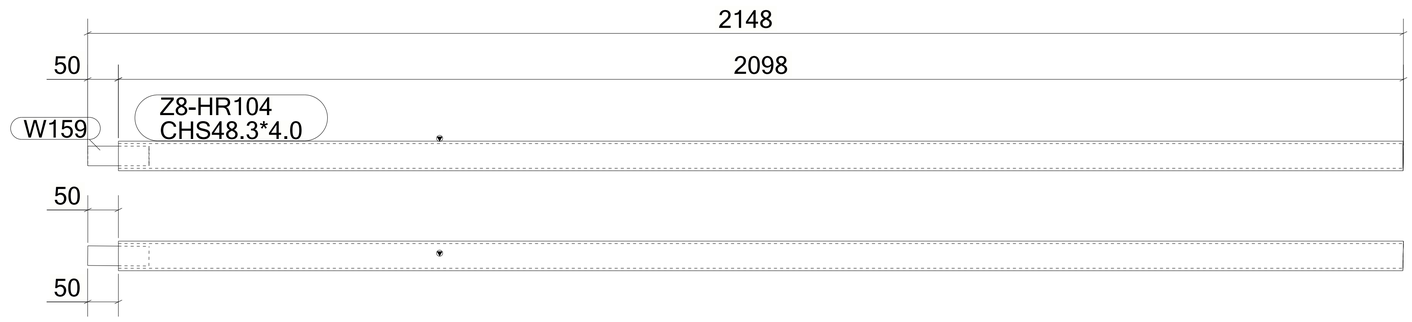

1 *REQUIRED AS DRAWN MARKED* **Z8-HR104**

6 October Monorail
Engineering Unit
Valid For Construction

GENERAL NOTES:

1. THE DIMENSIONS SHOWN ARE NOMINAL (IN MILLIMETERS), U.N.O.
2. WELD SIZESHALL BE AISC MINIMUM OF 6 mm UNLESS NOTED OTHERWISE.
3. ALL FIELD WELDS SHALL BE INSPECTED PER QUALITY ASSURANCE AND SPECIAL INSPECTIONS.

REFERENCE DRAWINGS

1	93M-BOA-NAT-LOT-04833
2	93M-BOA-NAT-LOT-09170
3	93M-BOA-NAT-LOT-01976
4	93M-BOA-NAT-LOT-20021
5	
6	
7	
8	
9	

6TH OF OCTOBER CITY RAIL TRANSIT MONORAIL

The Authority | Consultant: Hill International | Main Contractor: ORASCOM CONSTRUCTION / BOMBARDIER | Structural Designer

KEY PLAN:

SCALE: AS SHOWN | SHOPDRAWING | DATE: 12/05/2023

REV	DATE	DSG.	CHK.	APP.	AMENDMENTS	STATUS
B	12/05/2023	M.KH	M.KH	DR.M.M	ISSUED FOR INFORMATION	IFI
A	11/20/2022	M.KH	M.KH	DR.M.M	ISSUED FOR INFORMATION	IFI

DRAWING TITLE
6TH OF OCTOBER MONORAIL
SERVICE WALKWAYS
ZONE (1008)
Z8-HR104

Project Code	Rubric	Initiator	Lot	Ref	Number	Revision
93	M047	6ACC	60DE	PDWG	08345	B

Tekla structures

approval is subject to approval of coordination package between multi-discipline

REVIEWED WITH COMMENT
MONORAILS PROJECT

MATERIAL LIST FOR ASSEMBLY MK'D **Z8-HR105**

Mark	Profile	GRADE	No.	Length	Area	Weight
Z8-HR105	CHS48.3*4.0	S235JR	1	791	0.12	3.46
W315	PL3*45	S355JR	1	45	0.00	0.03
				Total	0.12	3.49

BOLT LIST:-

BOLT \ STUD	BOLT DESCRIPTION	QTY	FINISH

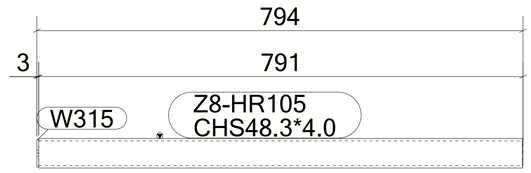

1 *REQUIRED AS DRAWN MARKED* **Z8-HR105**

GENERAL NOTES:

1. THE DIMENSIONS SHOWN ARE NOMINAL (IN MILLIMETERS), U.N.O.
2. WELD SIZESHALL BE AISC MINIMUM OF 6 mm UNLESS NOTED OTHERWISE.
3. ALL FIELD WELDS SHALL BE INSPECTED PER QUALITY ASSURANCE AND SPECIAL INSPECTIONS.

REFERENCE DRAWINGS

1	93M-BOA-NAT-LOT-04833
2	93M-BOA-NAT-LOT-09170
3	93M-BOA-NAT-LOT-01976
4	93M-BOA-NAT-LOT-20021
5	
6	
7	
8	
9	

6TH OF OCTOBER CITY RAIL TRANSIT MONORAIL

The Authority | Consultant: Hill International | Main Contractor: ORASCOM CONSTRUCTION, BOMBARDIER | Structural Designer: INNOVA TRANSPORTATION

KEY PLAN:

6 October Monorail
Engineering Unit
Valid For Construction

SCALE	SHOPDRAWING	DATE
AS SHOWN		12/05/2023

REV	DATE	DSG.	CHK.	APP.	AMENDMENTS	STATUS
B	12/05/2023	M.KH	M.KH	DR.M.M	ISSUED FOR INFORMATION	IFI
A	11/20/2022	M.KH	M.KH	DR.M.M	ISSUED FOR INFORMATION	IFI

DRAWING TITLE
6TH OF OCTOBER MONORAIL
SERVICE WALKWAYS
ZONE (1008)
Z8-HR105

Project Code	Rubric	Initiator	Lot	Ref	Number	Revision
93M047	6ACC	60DEP	DWG	0834	6	B

Tekla structures

approval is subject to approval of coordination package between multi-discipline

REVIEWED WITH COMMENT
MONORAILS PROJECT

MATERIAL LIST FOR ASSEMBLY MK'D **Z8-HR106**

Mark	Profile	GRADE	No.	Length	Area	Weight
Z8-HR106	CHS48.3*4.0	S235JR	1	2600	0.39	11.37
W315	PL3*45	S355JR	1	45	0.00	0.03
				Total	0.39	11.40

BOLT LIST:-

BOLT \ STUD	BOLT DESCRIPTION	QTY	FINISH

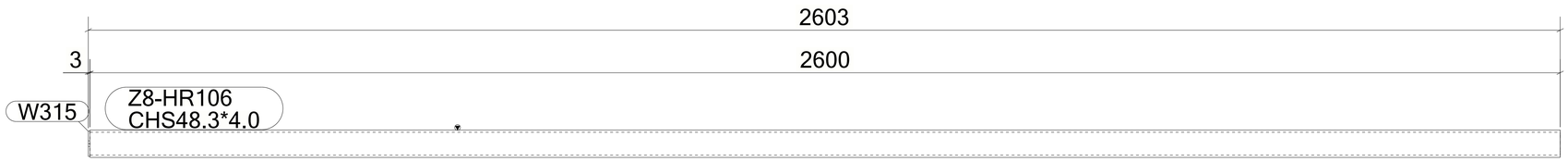

1 *REQUIRED AS DRAWN MARKED* **Z8-HR106**

6 October Monorail
Engineering Unit
Valid For Construction

GENERAL NOTES:

1. THE DIMENSIONS SHOWN ARE NOMINAL (IN MILLIMETERS), U.N.O.
2. WELD SIZESHALL BE AISC MINIMUM OF 6 mm UNLESS NOTED OTHERWISE.
3. ALL FIELD WELDS SHALL BE INSPECTED PER QUALITY ASSURANCE AND SPECIAL INSPECTIONS.

REFERENCE DRAWINGS

1	93M-BOA-NAT-LOT-04833
2	93M-BOA-NAT-LOT-09170
3	93M-BOA-NAT-LOT-01976
4	93M-BOA-NAT-LOT-20021
5	
6	
7	
8	
9	

6TH OF OCTOBER CITY RAIL TRANSIT MONORAIL

The Authority | Consultant: Hill International | Main Contractor: ORASCOM CONSTRUCTION, BOMBARDIER | Structural Designer: INNOVA TRANSPORTATION

KEY PLAN:

SCALE: AS SHOWN | SHOPDRAWING | DATE: 12/05/2023

REV	DATE	DSG.	CHK.	APP.	AMENDMENTS	STATUS
B	12/05/2023	M.KH	M.KH	DR.M.M	ISSUED FOR INFORMATION	IFI
A	11/20/2022	M.KH	M.KH	DR.M.M	ISSUED FOR INFORMATION	IFI

DRAWING TITLE
6TH OF OCTOBER MONORAIL
SERVICE WALKWAYS
ZONE (1008)
Z8-HR106

Project Code	Rubric	Initiator	Lot	Ref	Number	Revision
9 3 M 0	4 7 6	A C C	6 0 D E	P D W G	0 8 3 4 7	B

Tekla structures

approval is subject to approval of coordination package between multi-discipline

REVIEWED WITH COMMENT
MONORAILS PROJECT

MATERIAL LIST FOR ASSEMBLY MK'D **Z8-HR107**

Mark	Profile	GRADE	No.	Length	Area	Weight
Z8-HR107	CHS48.3*4.0	S235JR	1	1332	0.20	5.82
W838	PL3*45	S355-JR	1	45	0.00	0.03
				Total	0.20	5.86

BOLT LIST:-

BOLT \ STUD	BOLT DESCRIPTION	QTY	FINISH

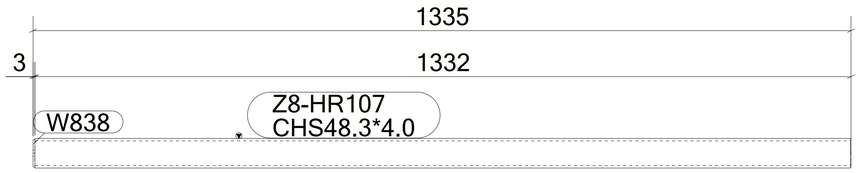

1 *REQUIRED AS DRAWN MARKED* **Z8-HR107**

6 October Monorail
Engineering Unit
Valid For Construction

GENERAL NOTES:

1. THE DIMENSIONS SHOWN ARE NOMINAL (IN MILLIMETERS), U.N.O.
2. WELD SIZESHALL BE AISC MINIMUM OF 6 mm UNLESS NOTED OTHERWISE.
3. ALL FIELD WELDS SHALL BE INSPECTED PER QUALITY ASSURANCE AND SPECIAL INSPECTIONS.

REFERENCE DRAWINGS

1	93M-BOA-NAT-LOT-04833
2	93M-BOA-NAT-LOT-09170
3	93M-BOA-NAT-LOT-01976
4	93M-BOA-NAT-LOT-20021
5	
6	
7	
8	
9	

6TH OF OCTOBER CITY RAIL TRANSIT MONORAIL

The Authority | Consultant: Hill International | Main Contractor: ORASCOM CONSTRUCTION, BOMBARDIER | Structural Designer: INNOVA TRANSPORTATION

KEY PLAN:

SCALE	SHOPDRAWING	DATE
AS SHOWN		12/05/2023

REV	DATE	DSG.	CHK.	APP.	AMENDMENTS	STATUS
B	12/05/2023	M.KH	M.KH	DR.M.M	ISSUED FOR INFORMATION	IFI
A	11/20/2022	M.KH	M.KH	DR.M.M	ISSUED FOR INFORMATION	IFI

DRAWING TITLE
6TH OF OCTOBER MONORAIL
SERVICE WALKWAYS
ZONE (1008)
Z8-HR107

Project Code	Rubric	Initiator	Lot	Ref	Number	Revision
9 3 M	0 4 7 6	A C C	6 0 D E P	D W G	0 8 3 4 8	B

Tekla structures

approval is subject to approval of coordination package between multi-discipline

REVIEWED WITH COMMENT
MONORAILS PROJECT

MATERIAL LIST FOR ASSEMBLY MK'D **Z8-HR108**

Mark	Profile	GRADE	No.	Length	Area	Weight
Z8-HR108	CHS48.3*4.0	S235JR	1	3145	0.47	13.75
W159	ROD32	S235JR	1	100	0.01	0.60
				Total	0.48	14.35

BOLT LIST:-

BOLT \ STUD	BOLT DESCRIPTION	QTY	FINISH

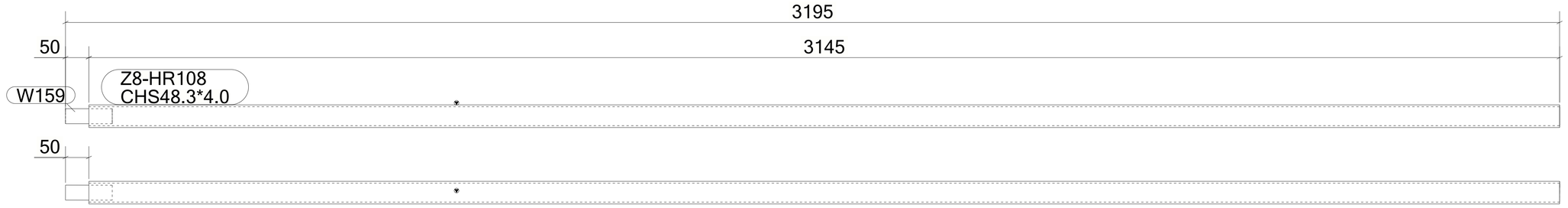

1 *REQUIRED AS DRAWN MARKED* **Z8-HR108**

6 October Monorail
Engineering Unit
Valid For Construction

GENERAL NOTES:

1. THE DIMENSIONS SHOWN ARE NOMINAL (IN MILLIMETERS), U.N.O.
2. WELD SIZESHALL BE AISC MINIMUM OF 6 mm UNLESS NOTED OTHERWISE.
3. ALL FIELD WELDS SHALL BE INSPECTED PER QUALITY ASSURANCE AND SPECIAL INSPECTIONS.

REFERENCE DRAWINGS

1	93M-BOA-NAT-LOT-04833
2	93M-BOA-NAT-LOT-09170
3	93M-BOA-NAT-LOT-01976
4	93M-BOA-NAT-LOT-20021
5	
6	
7	
8	
9	

6TH OF OCTOBER CITY RAIL TRANSIT MONORAIL

The Authority — Hill International Consultant — Main Contractor — Structural Designer

KEY PLAN:

SCALE: AS SHOWN | SHOPDRAWING | DATE: 12/05/2023

REV	DATE	DSG.	CHK.	APP.	AMENDMENTS	STATUS
B	12/05/2023	M.KH	M.KH	DR.M.M	ISSUED FOR INFORMATION	IFI
A	11/20/2022	M.KH	M.KH	DR.M.M	ISSUED FOR INFORMATION	IFI

DRAWING TITLE
6TH OF OCTOBER MONORAIL
SERVICE WALKWAYS
ZONE (1008)
Z8-HR108

Project Code	Rubric	Initiator	Lot	Ref	Number	Revision
9 3 M	0 4 7 6	A C C	6 0 D E P	D W G	0 8 3 4 9	B

Tekla structures

approval is subject to approval of coordination package between multi-discipline

REVIEWED WITH COMMENT
MONORAILS PROJECT

MATERIAL LIST FOR ASSEMBLY MK'D **Z8-HR109**

Mark	Profile	GRADE	No.	Length	Area	Weight
Z8-HR109	CHS48.3*4.0	S235JR	1	2417	0.36	10.57
W159	ROD32	S235JR	1	100	0.01	0.60
				Total	0.37	11.17

BOLT LIST:-

BOLT \ STUD	BOLT DESCRIPTION	QTY	FINISH

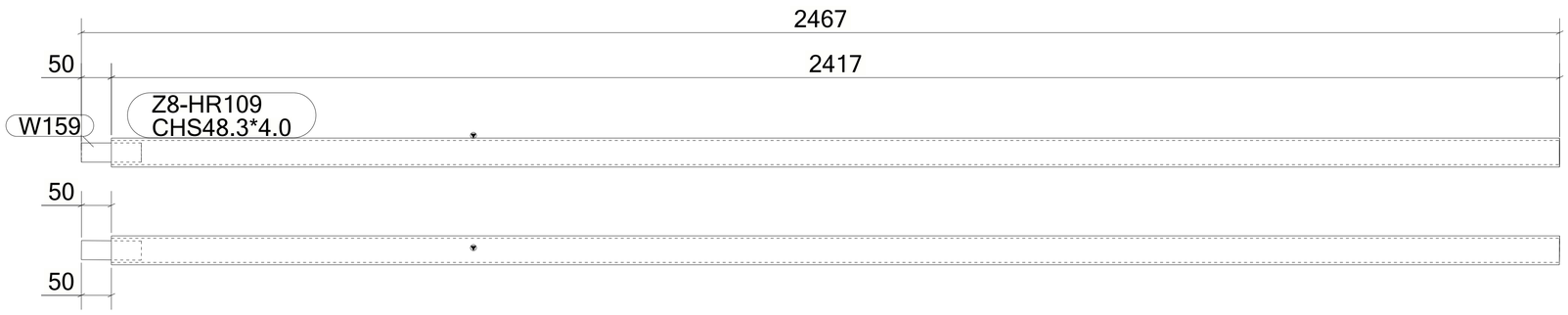

1 *REQUIRED AS DRAWN MARKED* **Z8-HR109**

6 October Monorail
Engineering Unit
Valid For Construction

GENERAL NOTES:

1. THE DIMENSIONS SHOWN ARE NOMINAL (IN MILLIMETERS), U.N.O.
2. WELD SIZESHALL BE AISC MINIMUM OF 6 mm UNLESS NOTED OTHERWISE.
3. ALL FIELD WELDS SHALL BE INSPECTED PER QUALITY ASSURANCE AND SPECIAL INSPECTIONS.

REFERENCE DRAWINGS

1	93M-BOA-NAT-LOT-04833
2	93M-BOA-NAT-LOT-09170
3	93M-BOA-NAT-LOT-01976
4	93M-BOA-NAT-LOT-20021
5	
6	
7	
8	
9	

6TH OF OCTOBER CITY RAIL TRANSIT MONORAIL

The Authority | Consultant: Hill International | Main Contractor: ORASCOM CONSTRUCTION, BOMBARDIER | Structural Designer: INNOVA TRANSPORTATION

KEY PLAN:

SCALE: AS SHOWN | SHOPDRAWING | DATE: 12/05/2023

REV	DATE	DSG.	CHK.	APP.	AMENDMENTS	STATUS
B	12/05/2023	M.KH	M.KH	DR.M.M	ISSUED FOR INFORMATION	IFI
A	11/20/2022	M.KH	M.KH	DR.M.M	ISSUED FOR INFORMATION	IFI

DRAWING TITLE
6TH OF OCTOBER MONORAIL
SERVICE WALKWAYS
ZONE (1008)
Z8-HR109

Project Code	Rubric	Initiator	Lot	Ref	Number	Revision
93M	476	ACC	60DEP	DWG	08350	B

Tekla structures

approval is subject to approval of coordination package between multi-discipline

REVIEWED WITH COMMENT MONORAILS PROJECT

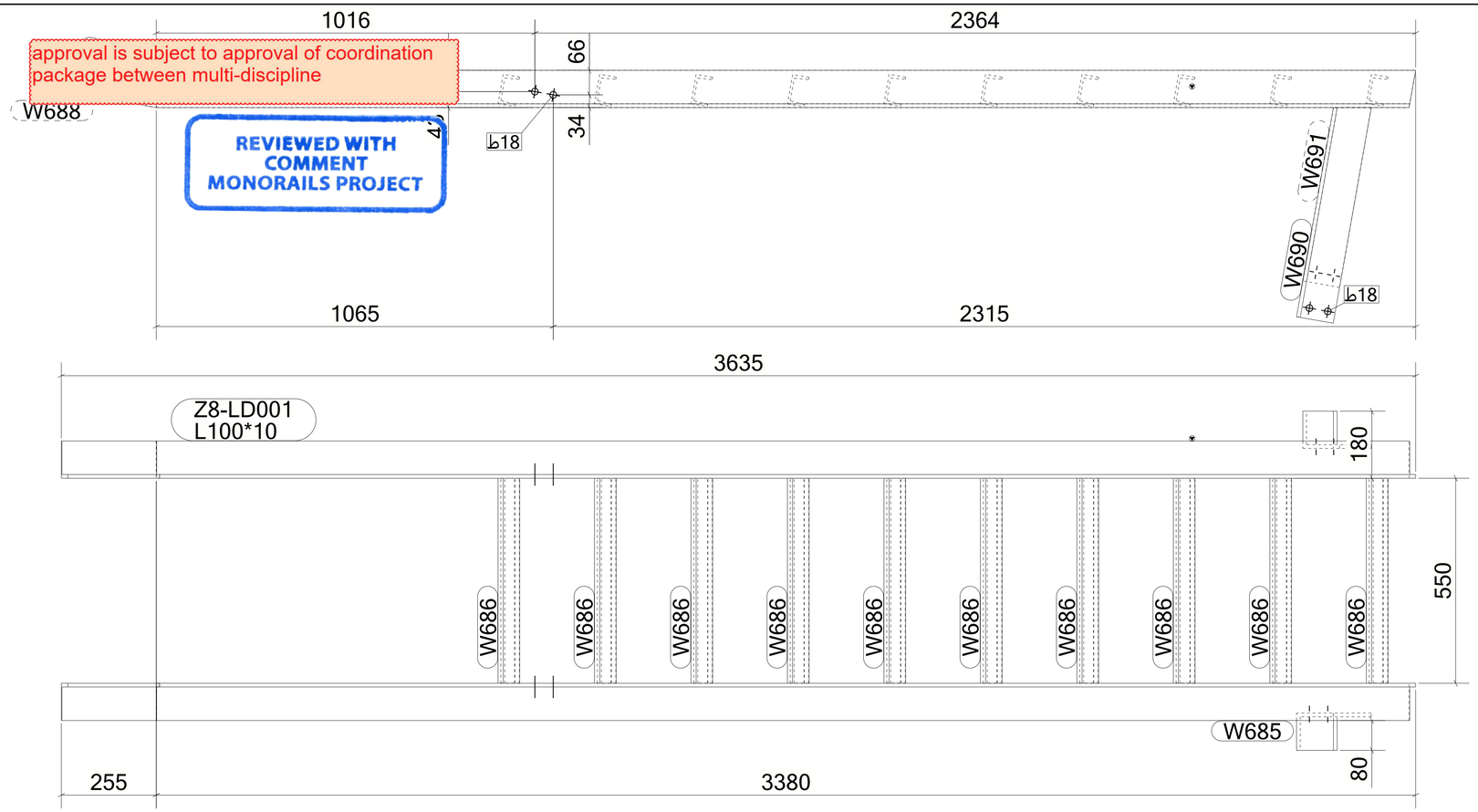

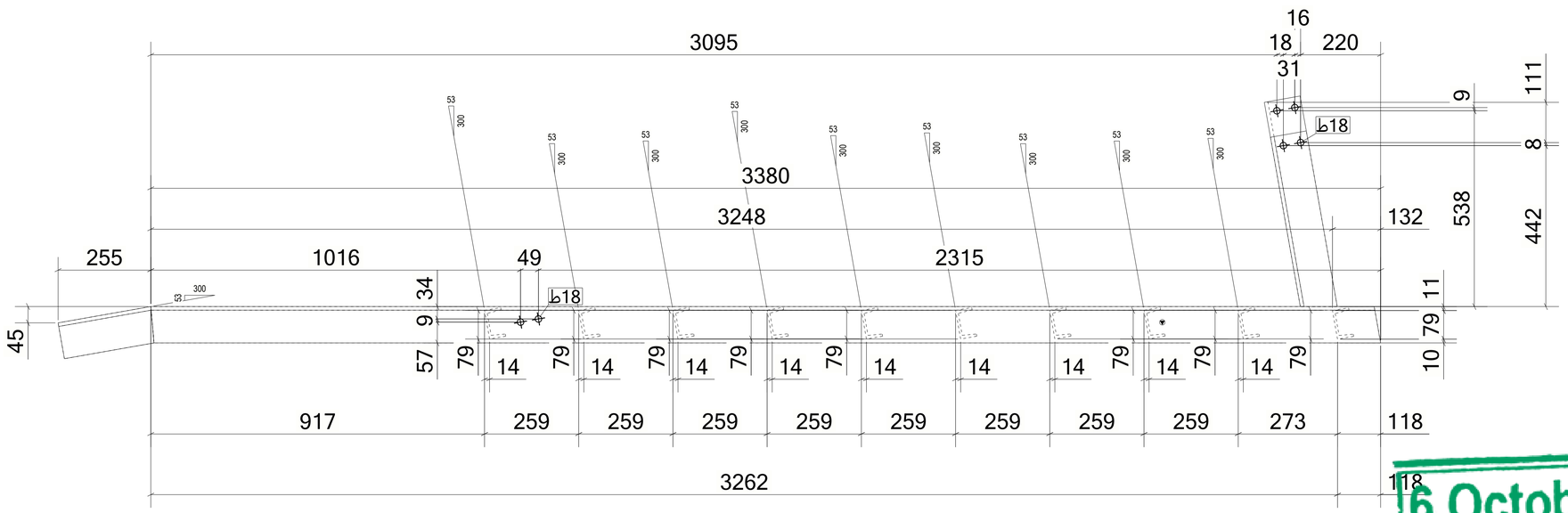

1 *REQUIRED AS DRAWN MARKED* **Z8-LD001**

MATERIAL LIST FOR ASSEMBLY MK'D **Z8-LD001**

Mark	Profile	GRADE	No.	Length	Area	Weight
Z8-LD001	L100*10	S235JR	1	3380	1.35	50.19
W685	L100*10	S235JR	1	3380	1.35	50.19
W686	UPN80	S235JR	10	550	0.17	4.75
W687	L100*10	S235JR	1	259	0.11	3.82
W688	L100*10	S235JR	1	259	0.11	3.82
W690	L100*10	S235JR	1	588	0.23	8.58
W691	L100*10	S235JR	1	490	0.19	7.12
				Total	5.05	171.21

BOLT LIST:-

BOLT \ STUD	BOLT DESCRIPTION	QTY	FINISH
BOLT	B1N2W 16 X 50 A325M	2	

GENERAL NOTES:

1. THE DIMENSIONS SHOWN ARE NOMINAL (IN MILLIMETERS), U.N.O.
2. WELD SIZESHALL BE AISC MINIMUM OF 6 mm UNLESS NOTED OTHERWISE.
3. ALL FIELD WELDS SHALL BE INSPECTED PER QUALITY ASSURANCE AND SPECIAL INSPECTIONS.

REFERENCE DRAWINGS

1	93M-BOA-NAT-LOT-04833
2	93M-BOA-NAT-LOT-09170
3	93M-BOA-NAT-LOT-01976
4	93M-BOA-NAT-LOT-20021
5	
6	
7	
8	
9	

6TH OF OCTOBER CITY RAIL TRANSIT MONORAIL

The Authority — Hill International (Consultant) — Main Contractor — Structural Designer

KEY PLAN:

6 October Monorail Engineering Unit Valid For Construction

SCALE	SHOPDRAWING	DATE
AS SHOWN		12/05/2023

REV	DATE	DSG.	CHK.	APP.	AMENDMENTS	STATUS
B	12/05/2023	M.KH	M.KH	DR.M.M	ISSUED FOR INFORMATION	IFI
A	11/20/2022	M.KH	M.KH	DR.M.M	ISSUED FOR INFORMATION	IFI

DRAWING TITLE
6TH OF OCTOBER MONORAIL SERVICE WALKWAYS ZONE (1008)
Z8-LD001

Project Code	Rubric	Initiator	Lot	Ref	Number	Revision
9 3 M 0	4 7 6	A C C	6 0 D E P	D W G	0 8 3 5 1	B

Tekla structures

approval is subject to approval of coordination package between multi-discipline

REVIEWED WITH COMMENT
MONORAILS PROJECT

MATERIAL LIST FOR ASSEMBLY MK'D **Z8-PO001**

Mark	Profile	GRADE	No.	Length	Area	Weight
Z8-PO001	L70*7	S235JR	1	1180	0.33	8.62
W108	PL16*100	S355JR	1	160	0.04	2.01
W109	PL10*25	S355JR	1	98	0.01	0.19
W110	PIPE2SCH40	S235JR	1	25	0.01	0.14
				Total	0.39	10.96

BOLT LIST:-

BOLT \ STUD	BOLT DESCRIPTION	QTY	FINISH
BOLT	B1N2W 16 X 50 A325M	2	

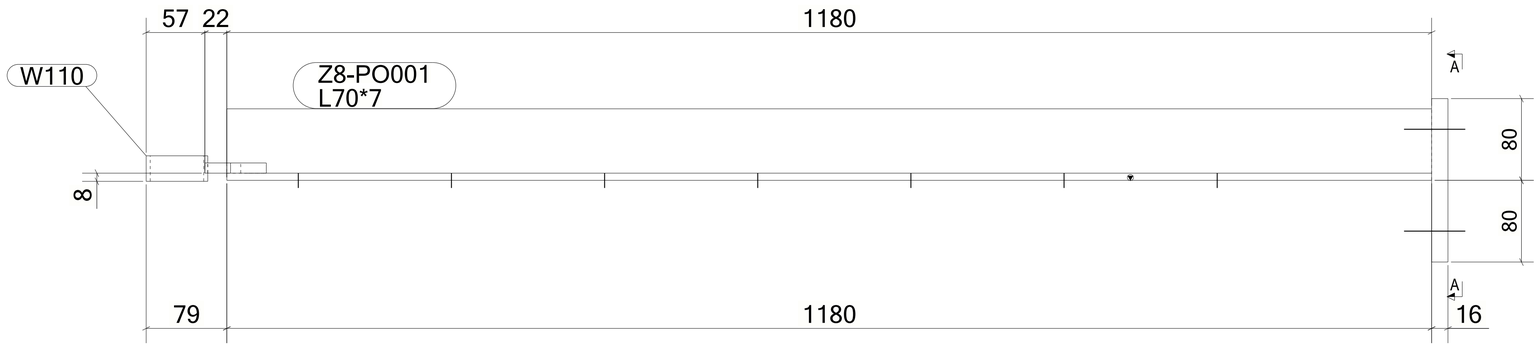

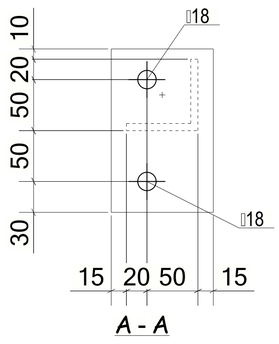

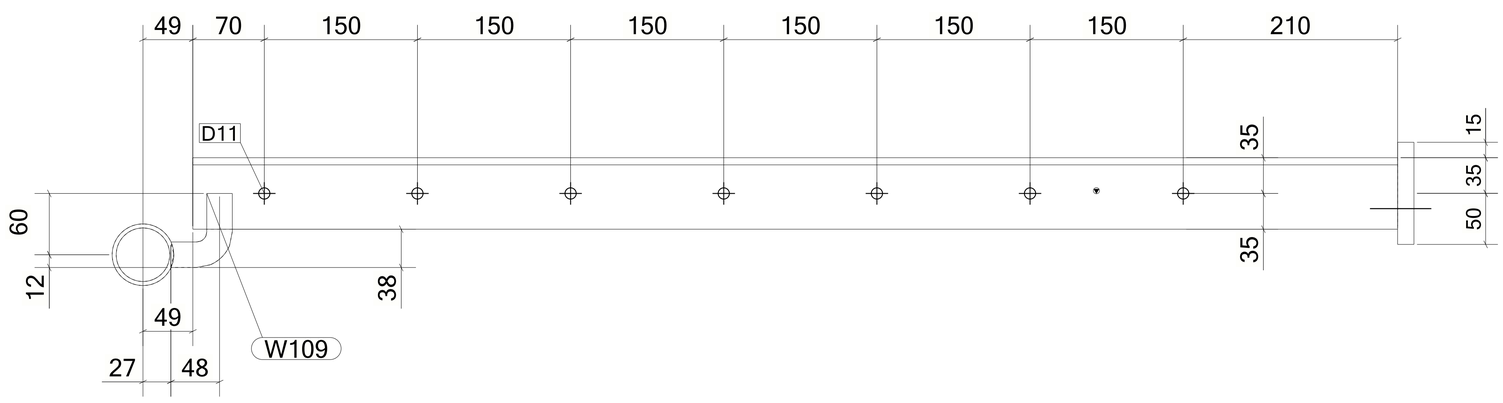

29 *REQUIRED AS DRAWN MARKED* **Z8-PO001**

6 October Monorail
Engineering Unit
Valid For Construction

GENERAL NOTES:

1. THE DIMENSIONS SHOWN ARE NOMINAL (IN MILLIMETERS), U.N.O.
2. WELD SIZESHALL BE AISC MINIMUM OF 6 mm UNLESS NOTED OTHERWISE.
3. ALL FIELD WELDS SHALL BE INSPECTED PER QUALITY ASSURANCE AND SPECIAL INSPECTIONS.

REFERENCE DRAWINGS

1	93M-BOA-NAT-LOT-04833
2	93M-BOA-NAT-LOT-09170
3	93M-BOA-NAT-LOT-01976
4	93M-BOA-NAT-LOT-20021
5	
6	
7	
8	
9	

6TH OF OCTOBER CITY RAIL TRANSIT MONORAIL

The Authority | Hill International Consultant | Main Contractor | Structural Designer

KEY PLAN:

SCALE: AS SHOWN | SHOPDRAWING | DATE: 12/05/2023

REV	DATE	DSG.	CHK.	APP.	AMENDMENTS	STATUS
B	12/05/2023	M.KH	M.KH	DR.M.M	ISSUED FOR INFORMATION	IFI
A	11/20/2022	M.KH	M.KH	DR.M.M	ISSUED FOR INFORMATION	IFI

DRAWING TITLE
6TH OF OCTOBER MONORAIL
SERVICE WALKWAYS
ZONE (1008)
Z8-PO001

Project Code	Rubric	Initiator	Lot	Ref	Number	Revision
9 3 M	0 4 7 6	A C C	6 0 D E P	D W G	0 8 3 5 2	B

Tekla structures

approval is subject to approval of coordination package between multi-discipline

REVIEWED WITH COMMENT
MONORAILS PROJECT

MATERIAL LIST FOR ASSEMBLY MK'D **Z8-PO002**

Mark	Profile	GRADE	No.	Length	Area	Weight
Z8-PO002	L70*7	S235JR	1	1180	0.33	8.62
W108	PL16*100	S355JR	1	160	0.04	2.01
W109	PL10*25	S355JR	1	98	0.01	0.19
W110	PIPE2SCH40	S235JR	1	25	0.01	0.14
				Total	0.39	10.96

BOLT LIST:-

BOLT \ STUD	BOLT DESCRIPTION		QTY	FINISH
BOLT	B1N2W 16 X 50	A325M	2	

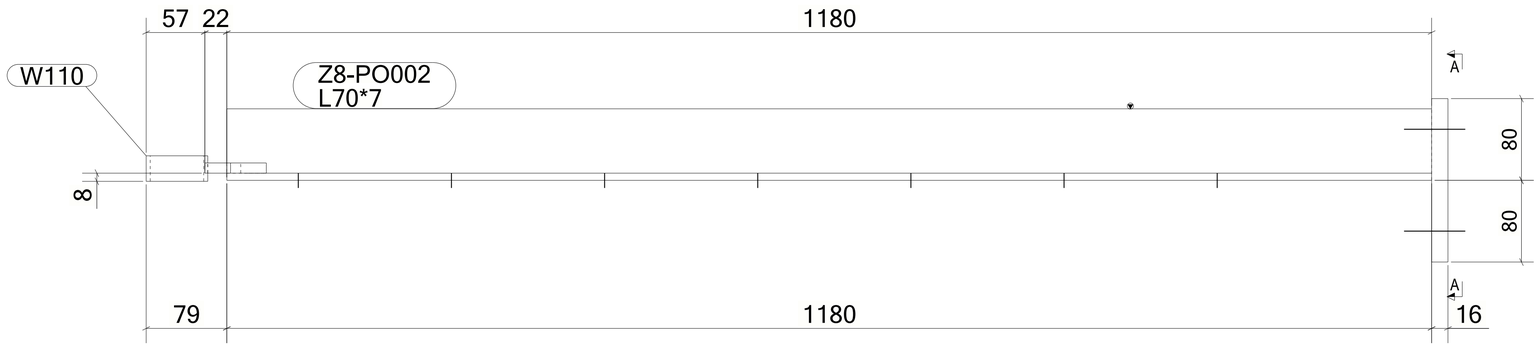

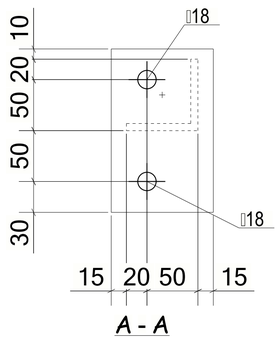

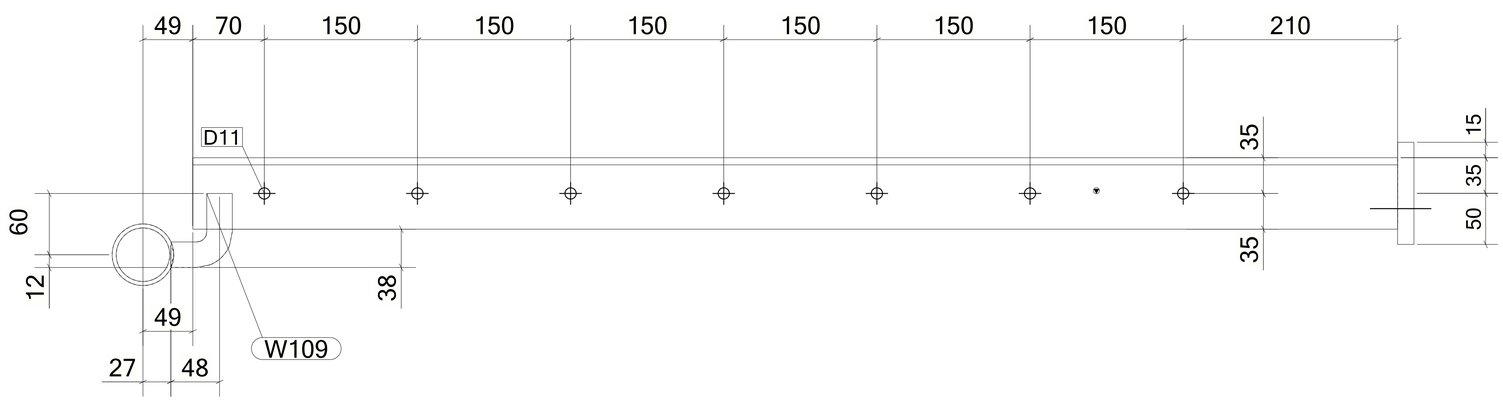

14 *REQUIRED AS DRAWN MARKED* **Z8-PO002**

6 October Monorail
Engineering Unit
Valid For Construction

GENERAL NOTES:

1. THE DIMENSIONS SHOWN ARE NOMINAL (IN MILLIMETERS), U.N.O.
2. WELD SIZESHALL BE AISC MINIMUM OF 6 mm UNLESS NOTED OTHERWISE.
3. ALL FIELD WELDS SHALL BE INSPECTED PER QUALITY ASSURANCE AND SPECIAL INSPECTIONS.

REFERENCE DRAWINGS

1	93M-BOA-NAT-LOT-04833
2	93M-BOA-NAT-LOT-09170
3	93M-BOA-NAT-LOT-01976
4	93M-BOA-NAT-LOT-20021
5	
6	
7	
8	
9	

6TH OF OCTOBER CITY RAIL TRANSIT MONORAIL

The Authority | Hill International Consultant | Main Contractor | Structural Designer

KEY PLAN:

SCALE: AS SHOWN | SHOPDRAWING | DATE: 12/05/2023

REV	DATE	DSG.	CHK.	APP.	AMENDMENTS	STATUS
B	12/05/2023	M.KH	M.KH	DR.M.M	ISSUED FOR INFORMATION	IFI
A	11/20/2022	M.KH	M.KH	DR.M.M	ISSUED FOR INFORMATION	IFI

DRAWING TITLE
6TH OF OCTOBER MONORAIL
SERVICE WALKWAYS
ZONE (1008)
Z8-PO002

Project Code	Rubric	Initiator	Lot	Ref	Number	Revision
9 3 M	0 4 7 6	A C C	6 0 D E P	D W G	0 8 3 5 3	B

Tekla structures

approval is subject to approval of coordination package between multi-discipline

REVIEWED WITH COMMENT
MONORAILS PROJECT

MATERIAL LIST FOR ASSEMBLY MK'D **Z8-PO003**

Mark	Profile	GRADE	No.	Length	Area	Weight
Z8-PO003	L70*7	S235JR	1	1180	0.33	8.62
W109	PL10*25	S355JR	1	98	0.01	0.19
W110	PIPE2SCH40	S235JR	1	25	0.01	0.14
W129	PL16*100	S355JR	1	160	0.04	2.01
				Total	0.39	10.96

BOLT LIST:-

BOLT \ STUD	BOLT DESCRIPTION		QTY	FINISH
BOLT	B1N2W 16 X 50	A325M	2	

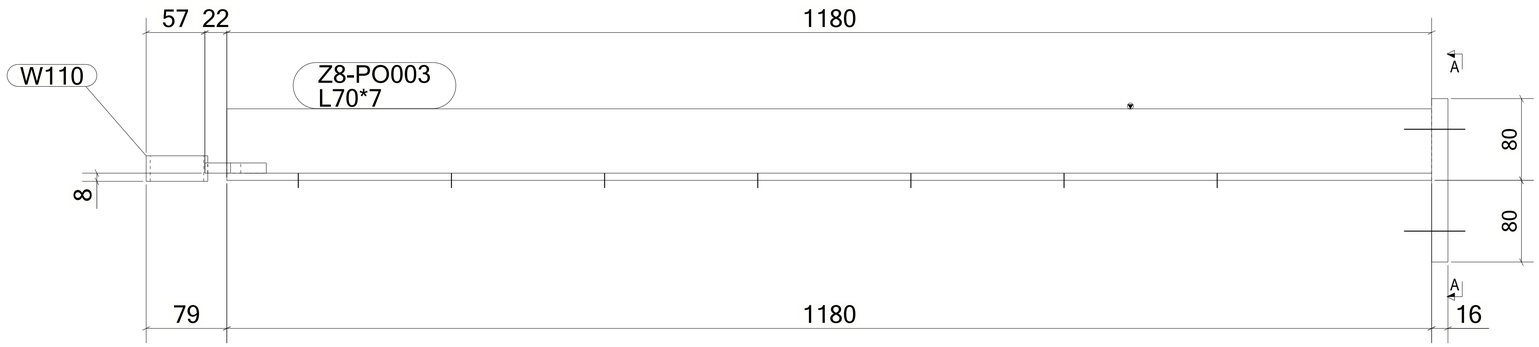

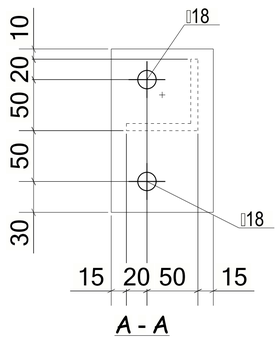

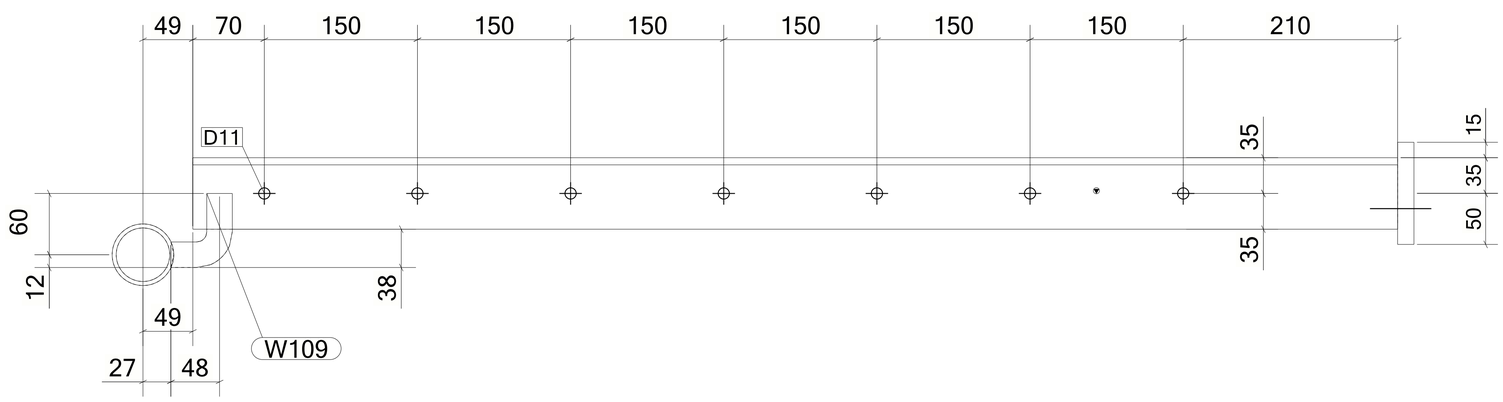

47 *REQUIRED AS DRAWN MARKED* **Z8-PO003**

6 October Monorail
Engineering Unit
Valid For Construction

GENERAL NOTES:

1. THE DIMENSIONS SHOWN ARE NOMINAL (IN MILLIMETERS), U.N.O.
2. WELD SIZESHALL BE AISC MINIMUM OF 6 mm UNLESS NOTED OTHERWISE.
3. ALL FIELD WELDS SHALL BE INSPECTED PER QUALITY ASSURANCE AND SPECIAL INSPECTIONS.

REFERENCE DRAWINGS

1	93M-BOA-NAT-LOT-04833
2	93M-BOA-NAT-LOT-09170
3	93M-BOA-NAT-LOT-01976
4	93M-BOA-NAT-LOT-20021
5	
6	
7	
8	
9	

6TH OF OCTOBER CITY RAIL TRANSIT MONORAIL

The Authority | Hill International Consultant | Main Contractor | Structural Designer

KEY PLAN:

SCALE	SHOPDRAWING	DATE
AS SHOWN		12/05/2023

REV	DATE	DSG.	CHK.	APP.	AMENDMENTS	STATUS
B	12/05/2023	M.KH	M.KH	DR.M.M	ISSUED FOR INFORMATION	IFI
A	11/20/2022	M.KH	M.KH	DR.M.M	ISSUED FOR INFORMATION	IFI

DRAWING TITLE
6TH OF OCTOBER MONORAIL
SERVICE WALKWAYS
ZONE (1008)
Z8-PO003

Project Code	Rubric	Initiator	Lot	Ref	Number	Revision
9 3 M	0 4 7 6	A C C	6 0 D E P	D W G	0 8 3 5 4	B

Tekla structures

approval is subject to approval of coordination package between multi-discipline

REVIEWED WITH COMMENT
MONORAILS PROJECT

MATERIAL LIST FOR ASSEMBLY MK'D **Z8-PO004**

Mark	Profile	GRADE	No.	Length	Area	Weight
Z8-PO004	L70*7	S235JR	1	1180	0.33	8.62
W109	PL10*25	S355JR	1	98	0.01	0.19
W110	PIPE2SCH40	S235JR	1	25	0.01	0.14
W120	PL16*100	S355JR	1	160	0.04	2.01
				Total	0.39	10.96

BOLT LIST:-

BOLT \ STUD	BOLT DESCRIPTION	QTY	FINISH
BOLT	B1N2W 16 X 60 A325M	2	

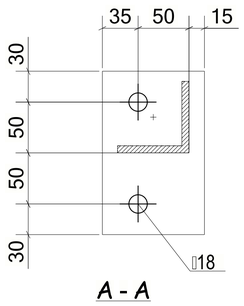

A - A

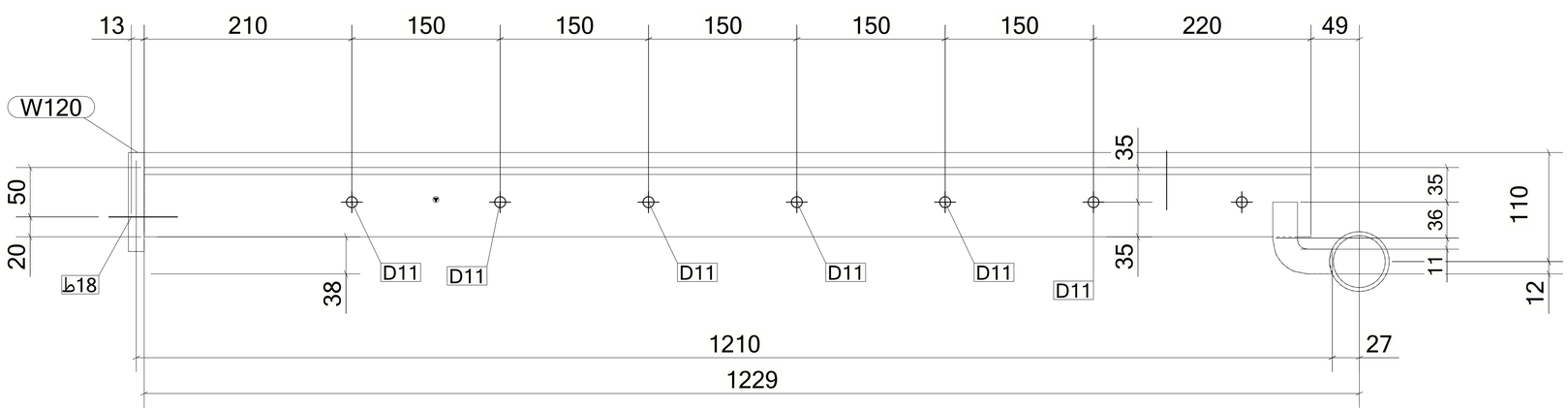

1 *REQUIRED AS DRAWN MARKED* **Z8-PO004**

6 October Monorail
Engineering Unit
Valid For Construction

GENERAL NOTES:

1. THE DIMENSIONS SHOWN ARE NOMINAL (IN MILLIMETERS), U.N.O.
2. WELD SIZESHALL BE AISC MINIMUM OF 6 mm UNLESS NOTED OTHERWISE.
3. ALL FIELD WELDS SHALL BE INSPECTED PER QUALITY ASSURANCE AND SPECIAL INSPECTIONS.

REFERENCE DRAWINGS

1	93M-BOA-NAT-LOT-04833
2	93M-BOA-NAT-LOT-09170
3	93M-BOA-NAT-LOT-01976
4	93M-BOA-NAT-LOT-20021
5	
6	
7	
8	
9	

6TH OF OCTOBER CITY RAIL TRANSIT MONORAIL

The Authority | Hill International Consultant | Main Contractor | Structural Designer

KEY PLAN:

SCALE: AS SHOWN | SHOPDRAWING | DATE: 12/05/2023

REV	DATE	DSG.	CHK.	APP.	AMENDMENTS	STATUS
B	12/05/2023	M.KH	M.KH	DR.M.M	ISSUED FOR INFORMATION	IFI
A	11/20/2022	M.KH	M.KH	DR.M.M	ISSUED FOR INFORMATION	IFI

DRAWING TITLE
6TH OF OCTOBER MONORAIL
SERVICE WALKWAYS
ZONE (1008)
Z8-PO004

Project Code	Rubric	Initiator	Lot	Ref	Number	Revision
93M	047	6ACC	60DE	PDWG	08355	B

Tekla structures

approval is subject to approval of coordination package between multi-discipline

REVIEWED WITH COMMENT
MONORAILS PROJECT

MATERIAL LIST FOR ASSEMBLY MK'D **Z8-PO005**

Mark	Profile	GRADE	No.	Length	Area	Weight
Z8-PO005	L70*7	S235JR	1	1180	0.33	8.62
W109	PL10*25	S355JR	1	98	0.01	0.19
W110	PIPE2SCH40	S235JR	1	25	0.01	0.14
W796	PL16*100	S355JR	1	160	0.04	2.01
				Total	0.39	10.96

BOLT LIST:-

BOLT \ STUD	BOLT DESCRIPTION		QTY	FINISH
BOLT	B1N2W 16 X 60	A325M	2	

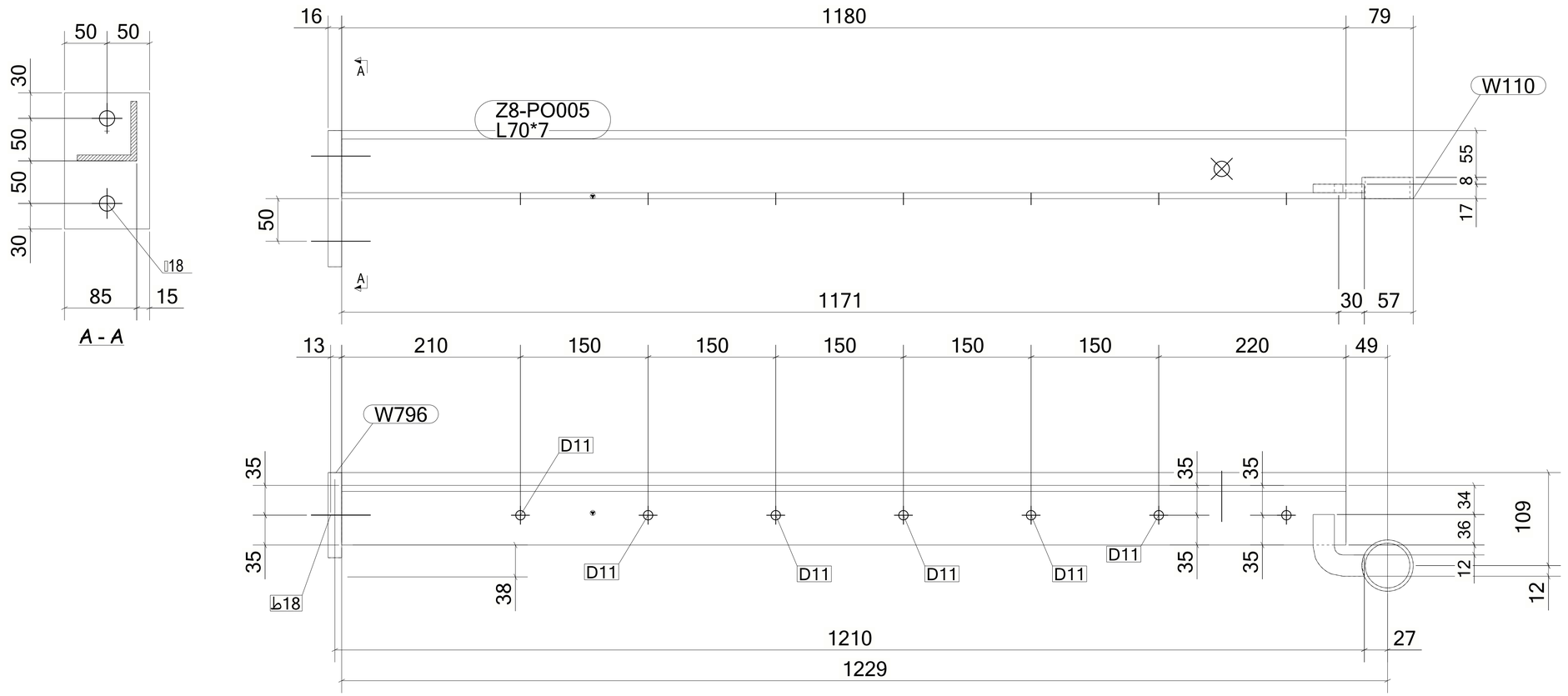

1 *REQUIRED AS DRAWN MARKED* **Z8-PO005**

6 October Monorail
Engineering Unit
Valid For Construction

GENERAL NOTES:

1. THE DIMENSIONS SHOWN ARE NOMINAL (IN MILLIMETERS), U.N.O.
2. WELD SIZESHALL BE AISC MINIMUM OF 6 mm UNLESS NOTED OTHERWISE.
3. ALL FIELD WELDS SHALL BE INSPECTED PER QUALITY ASSURANCE AND SPECIAL INSPECTIONS.

REFERENCE DRAWINGS

1	93M-BOA-NAT-LOT-04833
2	93M-BOA-NAT-LOT-09170
3	93M-BOA-NAT-LOT-01976
4	93M-BOA-NAT-LOT-20021
5	
6	
7	
8	
9	

6TH OF OCTOBER CITY RAIL TRANSIT MONORAIL

The Authority | Hill International Consultant | Main Contractor | Structural Designer

KEY PLAN:

SCALE: AS SHOWN | SHOPDRAWING | DATE: 12/05/2023

REV	DATE	DSG.	CHK.	APP.	AMENDMENTS	STATUS
B	12/05/2023	MKH	MKH	DR.M.M	ISSUED FOR INFORMATION	IFI
A	11/20/2022	MKH	MKH	DR.M.M	ISSUED FOR INFORMATION	IFI

DRAWING TITLE
6TH OF OCTOBER MONORAIL
SERVICE WALKWAYS
ZONE (1008)
Z8-PO005

Project Code	Rubric	Initiator	Lot	Ref	Number	Revision
9 3 M	0 4 7 6	A C C	6 0 D E P	D W G	0 8 3 5 6	B

Tekla structures

approval is subject to approval of coordination package between multi-discipline

REVIEWED WITH COMMENT
MONORAILS PROJECT

MATERIAL LIST FOR ASSEMBLY MK'D **Z8-PO006**

Mark	Profile	GRADE	No.	Length	Area	Weight
Z8-PO006	L70*7	S235JR	1	1180	0.33	8.62
W109	PL10*25	S355JR	1	98	0.01	0.19
W110	PIPE2SCH40	S235JR	1	25	0.01	0.14
W808	PL16*100	S355JR	1	160	0.04	2.01
				Total	0.39	10.96

BOLT LIST:-

BOLT \ STUD	BOLT DESCRIPTION	QTY	FINISH
BOLT	B1N2W 16 X 60 A325M	2	

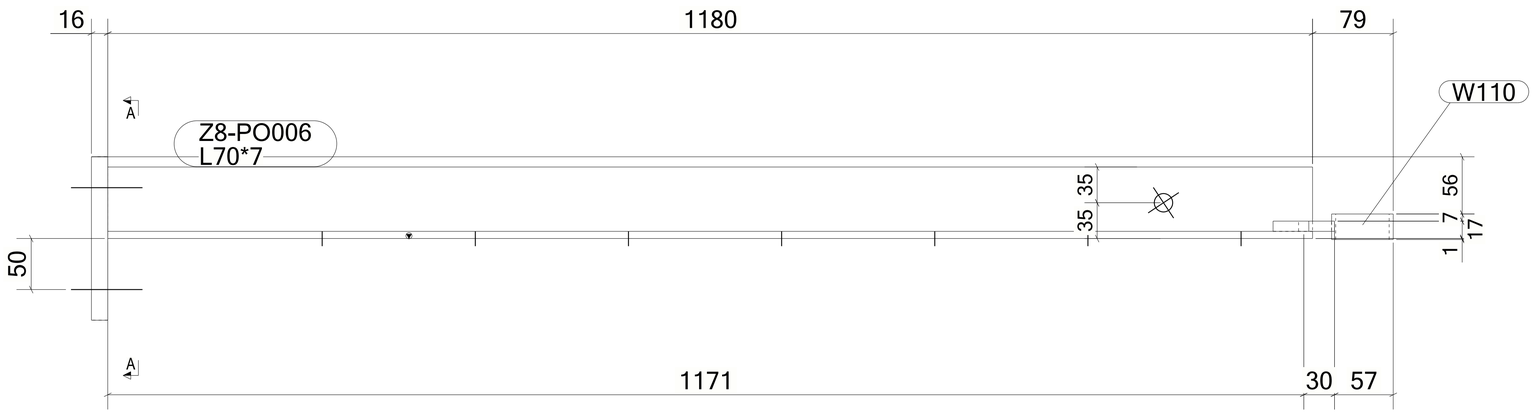

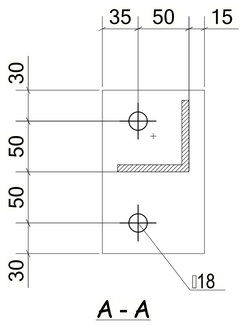

A - A

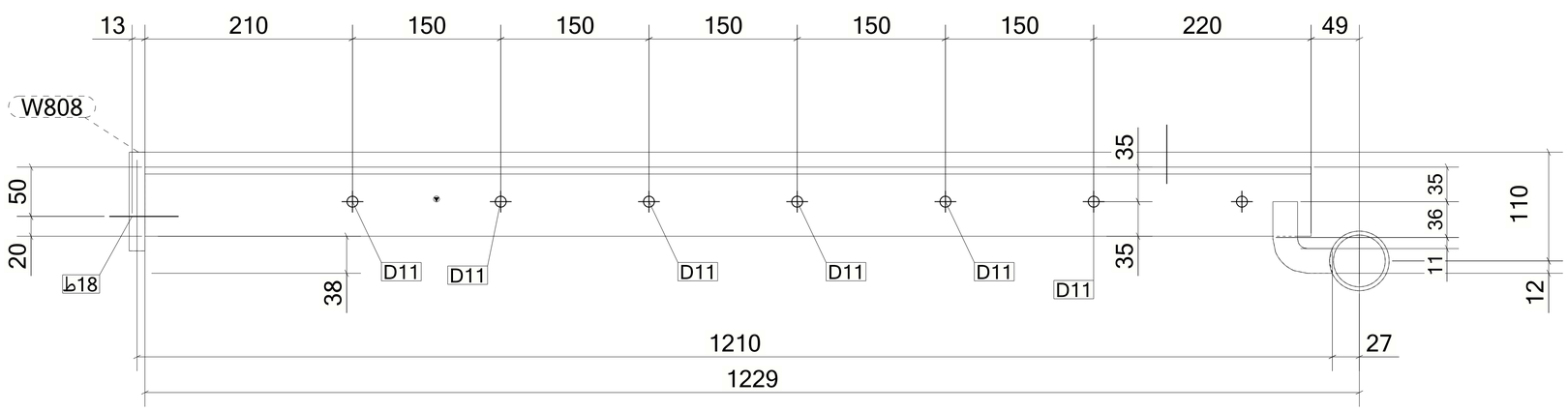

1 *REQUIRED AS DRAWN MARKED* **Z8-PO006**

6 October Monorail
Engineering Unit
Valid For Construction

GENERAL NOTES:

1. THE DIMENSIONS SHOWN ARE NOMINAL (IN MILLIMETERS), U.N.O.
2. WELD SIZESHALL BE AISC MINIMUM OF 6 mm UNLESS NOTED OTHERWISE.
3. ALL FIELD WELDS SHALL BE INSPECTED PER QUALITY ASSURANCE AND SPECIAL INSPECTIONS.

REFERENCE DRAWINGS

1	93M-BOA-NAT-LOT-04833
2	93M-BOA-NAT-LOT-09170
3	93M-BOA-NAT-LOT-01976
4	93M-BOA-NAT-LOT-20021
5	
6	
7	
8	
9	

6TH OF OCTOBER CITY RAIL TRANSIT MONORAIL

The Authority | Hill International (Consultant) | Main Contractor | Structural Designer

KEY PLAN:

SCALE: AS SHOWN | SHOPDRAWING | DATE: 12/05/2023

REV	DATE	DSG.	CHK.	APP.	AMENDMENTS	STATUS
B	12/05/2023	M.KH	M.KH	DR.M.M	ISSUED FOR INFORMATION	IFI
A	11/20/2022	M.KH	M.KH	DR.M.M	ISSUED FOR INFORMATION	IFI

DRAWING TITLE
6TH OF OCTOBER MONORAIL
SERVICE WALKWAYS
ZONE (1008)
Z8-PO006

Project Code	Rubric	Initiator	Lot	Ref	Number	Revision
93M	047	ACC	60DEP	DWG	08357	B

Tekla structures

approval is subject to approval of coordination package between multi-discipline

REVIEWED WITH COMMENT
MONORAILS PROJECT

MATERIAL LIST FOR ASSEMBLY MK'D **Z8-PO007**

Mark	Profile	GRADE	No.	Length	Area	Weight
Z8-PO007	L70*7	S235JR	1	1180	0.33	8.62
W108	PL16*100	S355JR	1	160	0.04	2.01
W109	PL10*25	S355JR	1	98	0.01	0.19
W110	PIPE2SCH40	S235JR	1	25	0.01	0.14
				Total	0.39	10.96

BOLT LIST:-

BOLT \ STUD	BOLT DESCRIPTION	QTY	FINISH
BOLT	B1N2W 16 X 50 A325M	2	

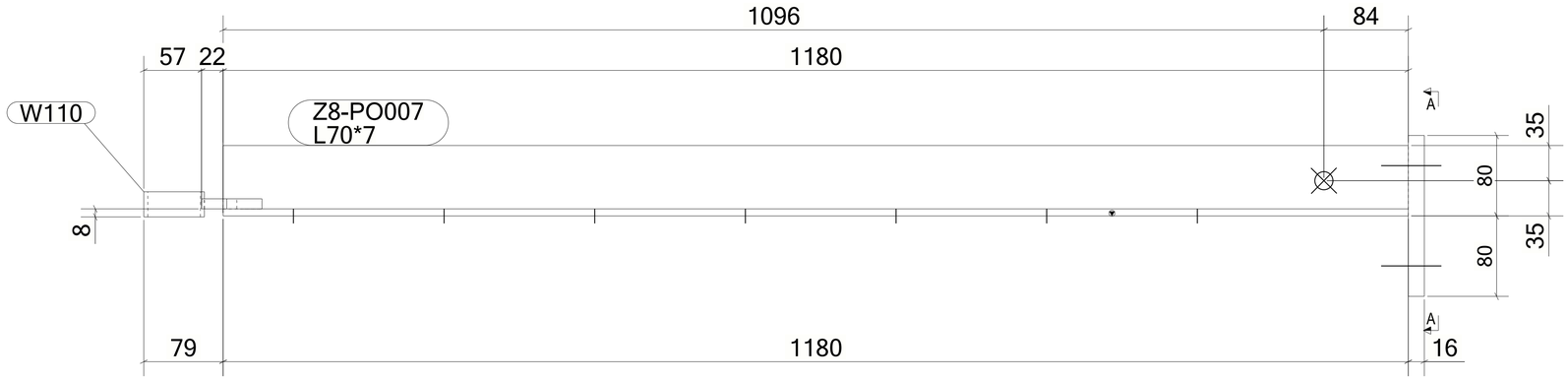

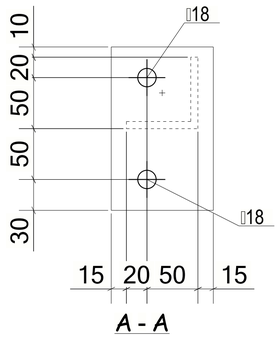

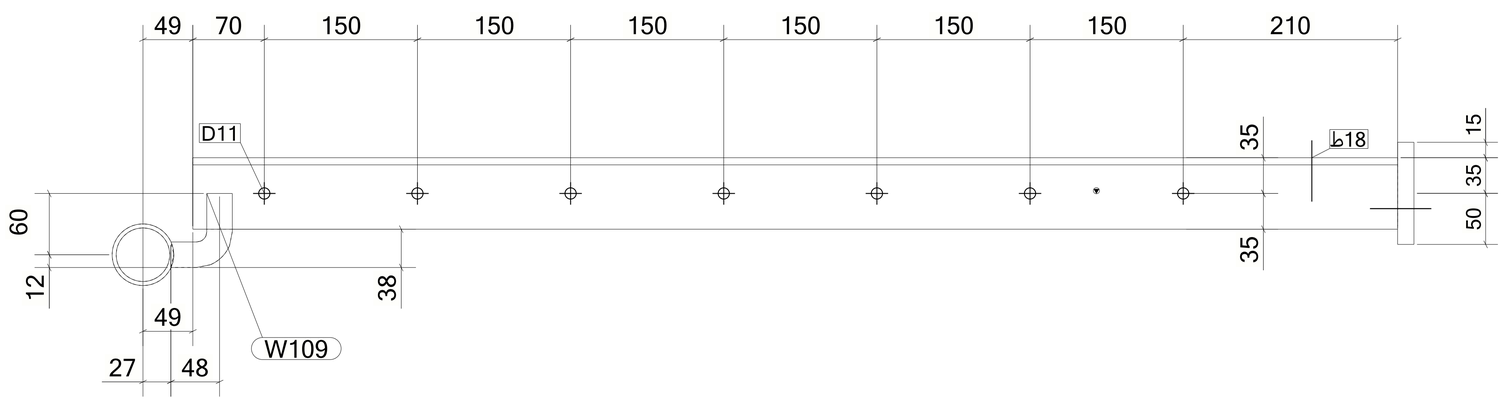

2 *REQUIRED AS DRAWN MARKED* **Z8-PO007**

6 October Monorail
Engineering Unit
Valid For Construction

GENERAL NOTES:

1. THE DIMENSIONS SHOWN ARE NOMINAL (IN MILLIMETERS), U.N.O.
2. WELD SIZESHALL BE AISC MINIMUM OF 6 mm UNLESS NOTED OTHERWISE.
3. ALL FIELD WELDS SHALL BE INSPECTED PER QUALITY ASSURANCE AND SPECIAL INSPECTIONS.

REFERENCE DRAWINGS

1	93M-BOA-NAT-LOT-04833
2	93M-BOA-NAT-LOT-09170
3	93M-BOA-NAT-LOT-01976
4	93M-BOA-NAT-LOT-20021
5	
6	
7	
8	
9	

6TH OF OCTOBER CITY RAIL TRANSIT MONORAIL

The Authority | Hill International Consultant | ORASCOM BOMBARDIER Main Contractor | INNOVA Structural Designer

KEY PLAN:

SCALE: AS SHOWN | SHOPDRAWING | DATE: 12/05/2023

REV	DATE	DSG.	CHK.	APP.	AMENDMENTS	STATUS
B	12/05/2023	M.KH	M.KH	DR.M.M	ISSUED FOR INFORMATION	IFI
A	11/20/2022	M.KH	M.KH	DR.M.M	ISSUED FOR INFORMATION	IFI

DRAWING TITLE
6TH OF OCTOBER MONORAIL
SERVICE WALKWAYS
ZONE (1008)
Z8-PO007

Project Code	Rubric	Initiator	Lot	Ref	Number	Revision
9 3 M	0 4 7 6	A C C	6 0 D E P	D W G	0 8 3 5 8	B

Tekla structures

approval is subject to approval of coordination package between multi-discipline

REVIEWED WITH COMMENT
MONORAILS PROJECT

MATERIAL LIST FOR ASSEMBLY MK'D **Z8-PO008**

Mark	Profile	GRADE	No.	Length	Area	Weight
Z8-PO008	L70*7	S235JR	1	1180	0.33	8.62
W109	PL10*25	S355JR	1	98	0.01	0.19
W110	PIPE2SCH40	S235JR	1	25	0.01	0.14
W129	PL16*100	S355JR	1	160	0.04	2.01
				Total	0.39	10.96

BOLT LIST:-

BOLT \ STUD	BOLT DESCRIPTION		QTY	FINISH
BOLT	B1N2W 16 X 50	A325M	2	

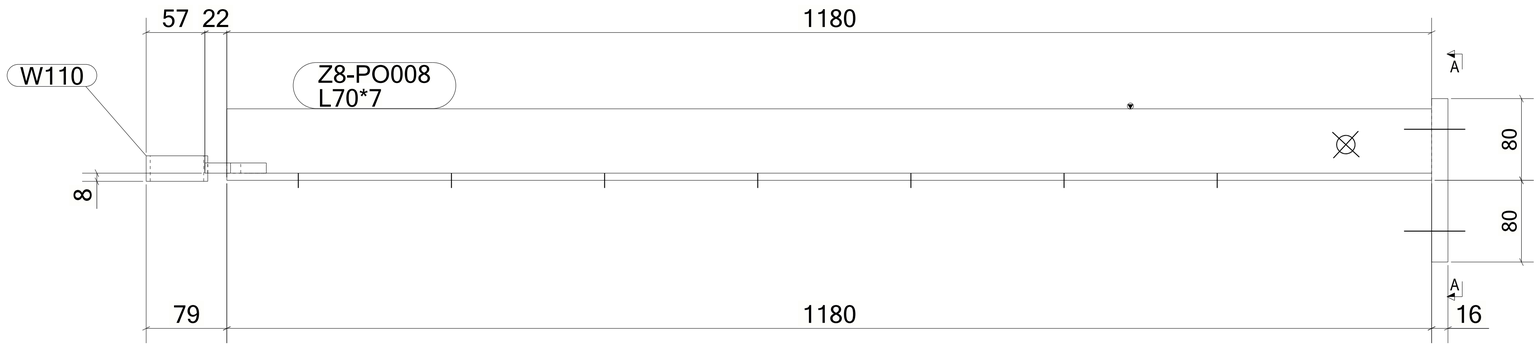

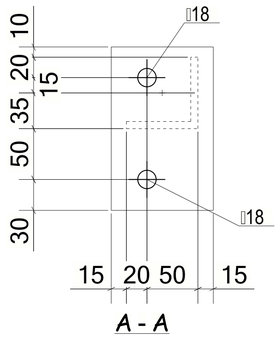

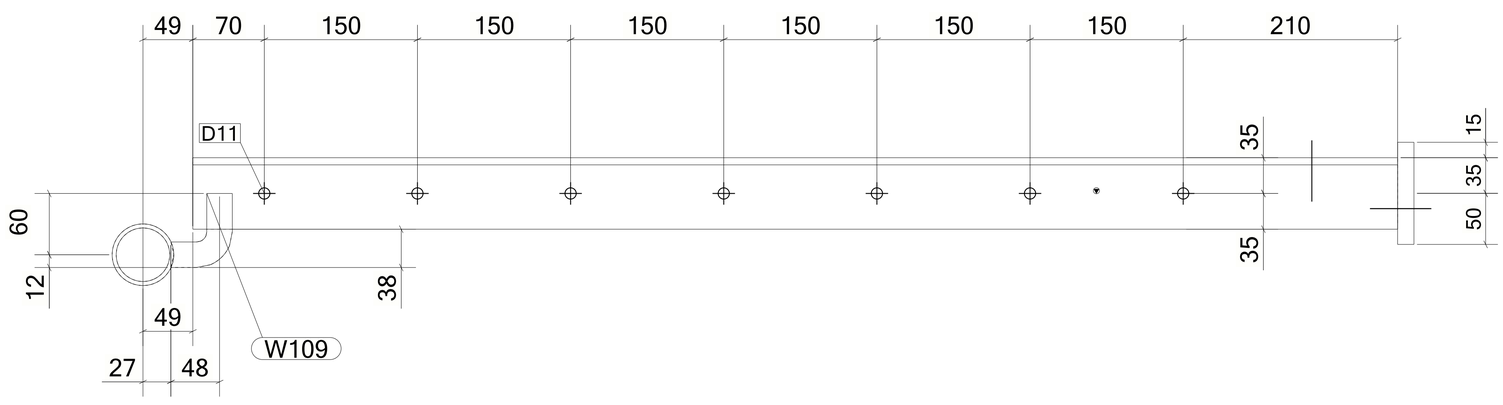

4 *REQUIRED AS DRAWN MARKED* **Z8-PO008**

6 October Monorail
Engineering Unit
Valid For Construction

GENERAL NOTES:

1. THE DIMENSIONS SHOWN ARE NOMINAL (IN MILLIMETERS), U.N.O.
2. WELD SIZESHALL BE AISC MINIMUM OF 6 mm UNLESS NOTED OTHERWISE.
3. ALL FIELD WELDS SHALL BE INSPECTED PER QUALITY ASSURANCE AND SPECIAL INSPECTIONS.

REFERENCE DRAWINGS

1	93M-BOA-NAT-LOT-04833
2	93M-BOA-NAT-LOT-09170
3	93M-BOA-NAT-LOT-01976
4	93M-BOA-NAT-LOT-20021
5	
6	
7	
8	
9	

6TH OF OCTOBER CITY RAIL TRANSIT MONORAIL

The Authority | Hill International Consultant | Main Contractor | Structural Designer

KEY PLAN:

SCALE: AS SHOWN | SHOPDRAWING | DATE: 12/05/2023

REV	DATE	DSG.	CHK.	APP.	AMENDMENTS	STATUS
B	12/05/2023	M.KH	M.KH	DR.M.M	ISSUED FOR INFORMATION	IFI
A	11/20/2022	M.KH	M.KH	DR.M.M	ISSUED FOR INFORMATION	IFI

DRAWING TITLE
6TH OF OCTOBER MONORAIL
SERVICE WALKWAYS
ZONE (1008)
Z8-PO008

Project Code	Rubric	Initiator	Lot	Ref	Number	Revision
9 3 M	0 4 7 6	A C C	6 0 D E P	D W G	0 8 3 5 9	B

Tekla structures

approval is subject to approval of coordination package between multi-discipline

REVIEWED WITH COMMENT
MONORAILS PROJECT

MATERIAL LIST FOR ASSEMBLY MK'D **Z8-PO009**

Mark	Profile	GRADE	No.	Length	Area	Weight
Z8-PO009	L70*7	S235JR	1	1180	0.33	8.62
W108	PL16*100	S355JR	1	160	0.04	2.01
W109	PL10*25	S355JR	1	98	0.01	0.19
W110	PIPE2SCH40	S235JR	1	25	0.01	0.14
				Total	0.39	10.96

BOLT LIST:-

BOLT \ STUD	BOLT DESCRIPTION	QTY	FINISH
BOLT	B1N2W 16 X 60 A325M	2	

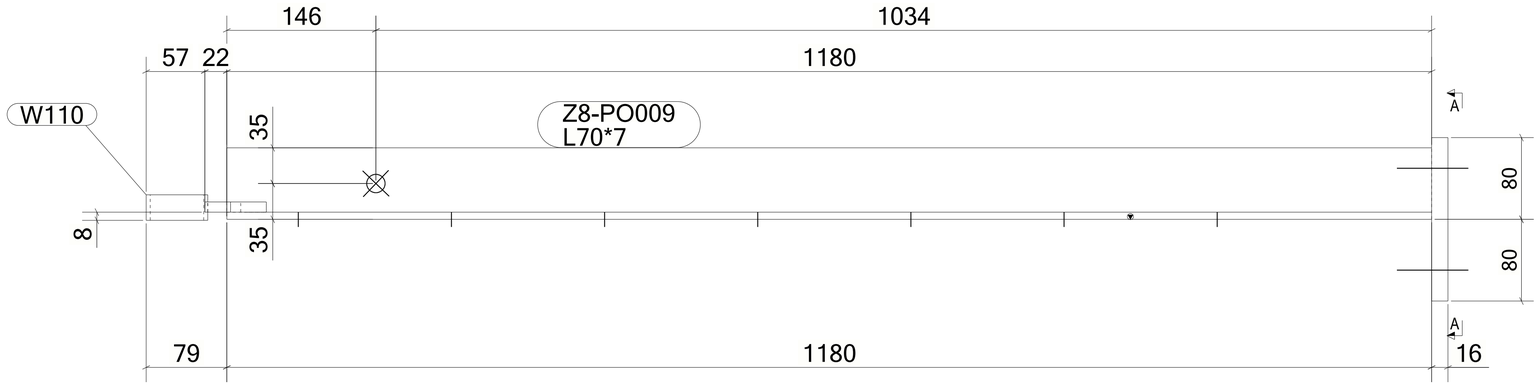

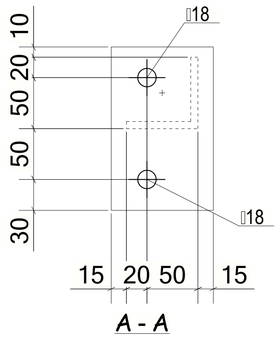

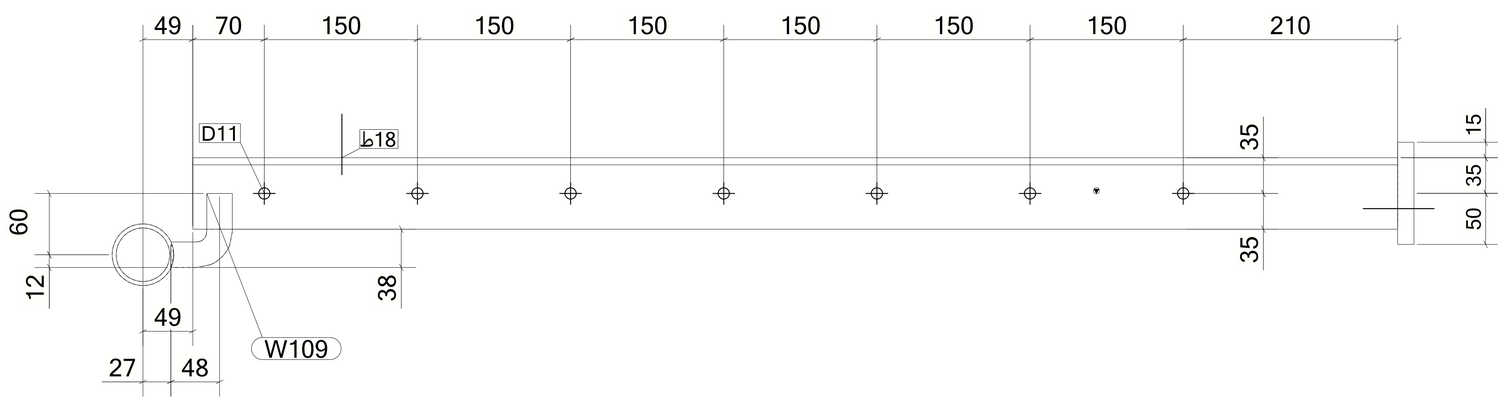

1 *REQUIRED AS DRAWN MARKED* **Z8-PO009**

6 October Monorail
Engineering Unit
Valid For Construction

GENERAL NOTES:

1. THE DIMENSIONS SHOWN ARE NOMINAL (IN MILLIMETERS), U.N.O.
2. WELD SIZESHALL BE AISC MINIMUM OF 6 mm UNLESS NOTED OTHERWISE.
3. ALL FIELD WELDS SHALL BE INSPECTED PER QUALITY ASSURANCE AND SPECIAL INSPECTIONS.

REFERENCE DRAWINGS

1	93M-BOA-NAT-LOT-04833
2	93M-BOA-NAT-LOT-09170
3	93M-BOA-NAT-LOT-01976
4	93M-BOA-NAT-LOT-20021
5	
6	
7	
8	
9	

6TH OF OCTOBER CITY RAIL TRANSIT MONORAIL

The Authority — Hill International Consultant — Main Contractor — Structural Designer

KEY PLAN:

SCALE	SHOPDRAWING	DATE
AS SHOWN		12/05/2023

REV	DATE	DSG.	CHK.	APP.	AMENDMENTS	STATUS
B	12/05/2023	M.KH	M.KH	DR.M.M	ISSUED FOR INFORMATION	IFI
A	11/20/2022	M.KH	M.KH	DR.M.M	ISSUED FOR INFORMATION	IFI

DRAWING TITLE
6TH OF OCTOBER MONORAIL
SERVICE WALKWAYS
ZONE (1008)
Z8-PO009

Project Code	Rubric	Initiator	Lot	Ref	Number	Revision
9 3 M	0 4 7 6	A C C	6 0 D E P	D W G	0 8 3 6 0	B

Tekla structures

approval is subject to approval of coordination package between multi-discipline

REVIEWED WITH COMMENT
MONORAILS PROJECT

MATERIAL LIST FOR ASSEMBLY MK'D **Z8-PO010**

Mark	Profile	GRADE	No.	Length	Area	Weight
Z8-PO010	L70*7	S235JR	1	1180	0.33	8.62
W109	PL10*25	S355JR	1	98	0.01	0.19
W110	PIPE2SCH40	S235JR	1	25	0.01	0.14
W129	PL16*100	S355JR	1	160	0.04	2.01
				Total	0.39	10.96

BOLT LIST:-

BOLT \ STUD	BOLT DESCRIPTION		QTY	FINISH
BOLT	B1N2W 16 X 60	A325M	2	

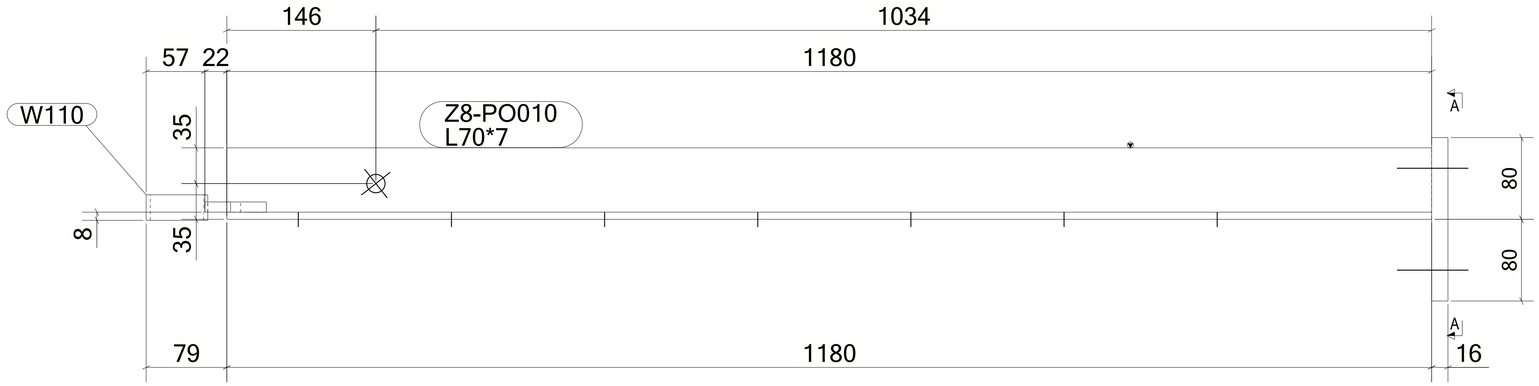

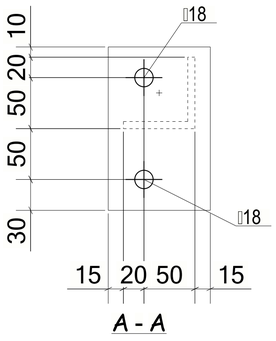

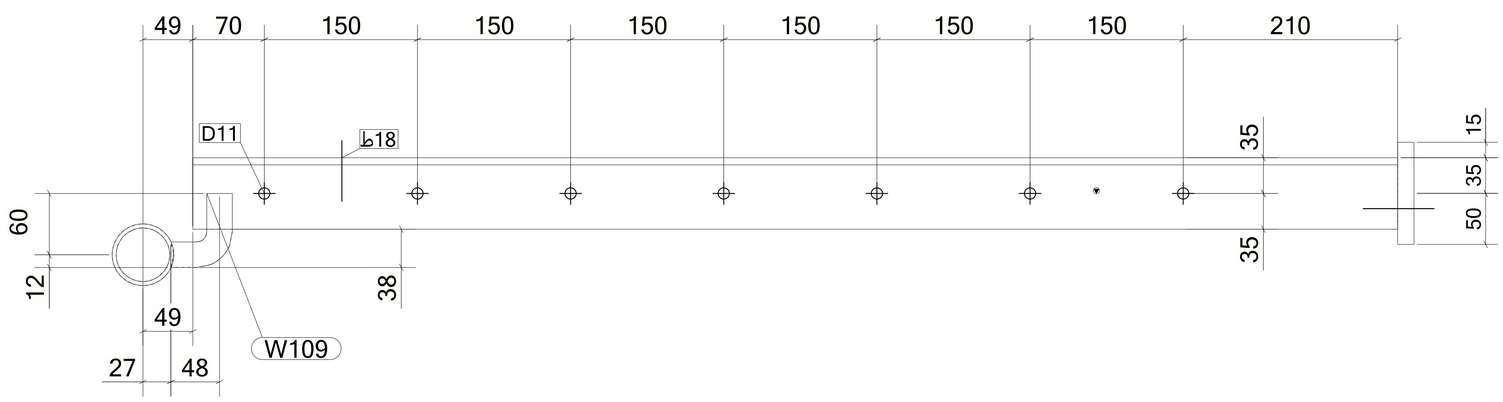

1 *REQUIRED AS DRAWN MARKED* **Z8-PO010**

6 October Monorail
Engineering Unit
Valid For Construction

GENERAL NOTES:

1. THE DIMENSIONS SHOWN ARE NOMINAL (IN MILLIMETERS), U.N.O.
2. WELD SIZESHALL BE AISC MINIMUM OF 6 mm UNLESS NOTED OTHERWISE.
3. ALL FIELD WELDS SHALL BE INSPECTED PER QUALITY ASSURANCE AND SPECIAL INSPECTIONS.

REFERENCE DRAWINGS

1	93M-BOA-NAT-LOT-04833
2	93M-BOA-NAT-LOT-09170
3	93M-BOA-NAT-LOT-01976
4	93M-BOA-NAT-LOT-20021
5	
6	
7	
8	
9	

6TH OF OCTOBER CITY RAIL TRANSIT MONORAIL

The Authority | Hill International Consultant | Main Contractor | Structural Designer

KEY PLAN:

SCALE	SHOPDRAWING	DATE
AS SHOWN		12/05/2023

REV	DATE	DSG.	CHK.	APP.	AMENDMENTS	STATUS
B	12/05/2023	M.KH	M.KH	DR.M.M	ISSUED FOR INFORMATION	IFI
A	11/20/2022	M.KH	M.KH	DR.M.M	ISSUED FOR INFORMATION	IFI

DRAWING TITLE
6TH OF OCTOBER MONORAIL
SERVICE WALKWAYS
ZONE (1008)
Z8-PO010

Project Code	Rubric	Initiator	Lot	Ref	Number	Revision
9 3 M	0 4 7 6	A C C	6 0 D E P	D W G	0 8 3 6 1	B

Tekla structures

approval is subject to approval of coordination package between multi-discipline

REVIEWED WITH COMMENT
MONORAILS PROJECT

MATERIAL LIST FOR ASSEMBLY MK'D **Z8-PO011**

Mark	Profile	GRADE	No.	Length	Area	Weight
Z8-PO011	L70*7	S235JR	1	1180	0.33	8.62
W109	PL10*25	S355JR	1	98	0.01	0.19
W110	PIPE2SCH40	S235JR	1	25	0.01	0.14
W795	PL16*100	S355JR	1	160	0.04	2.01
				Total	0.39	10.96

BOLT LIST:-

BOLT \ STUD	BOLT DESCRIPTION		QTY	FINISH
BOLT	B1N2W 16 X 60	A325M	2	

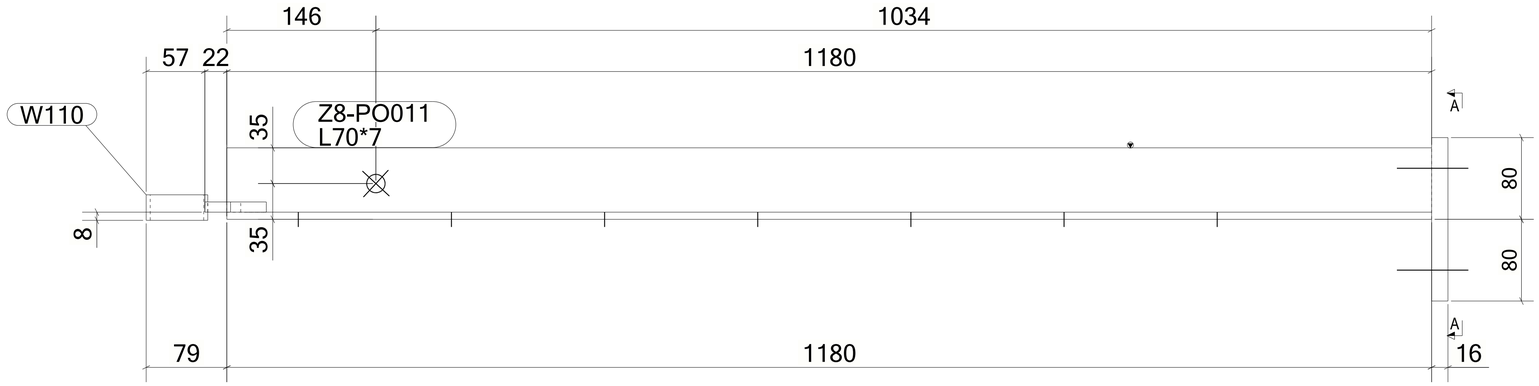

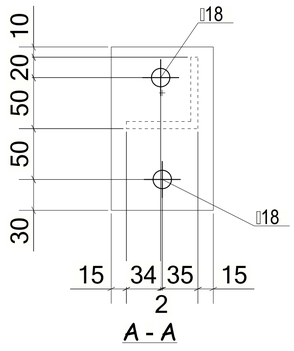

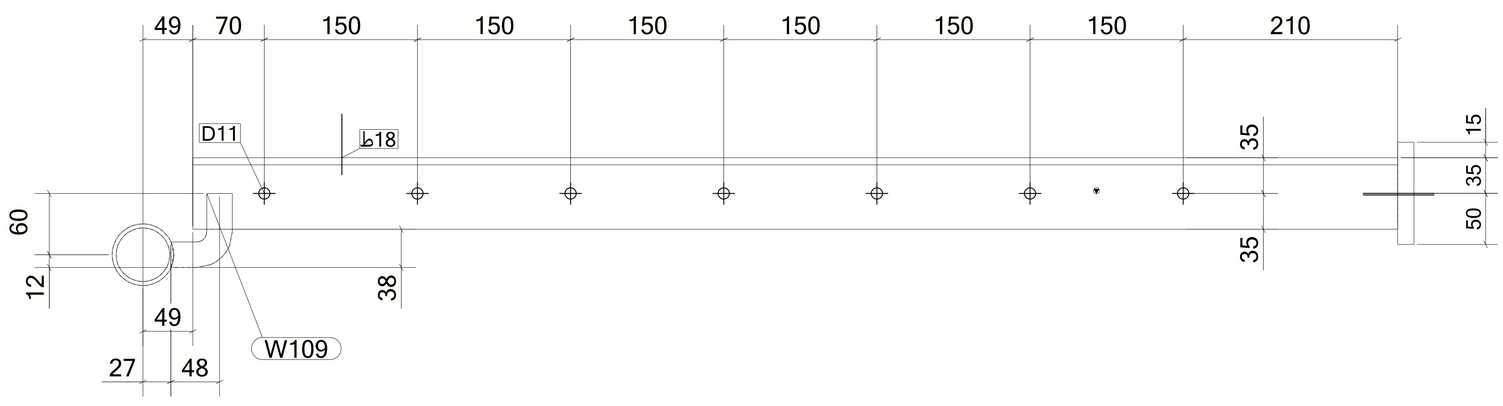

1 *REQUIRED AS DRAWN MARKED* **Z8-PO011**

6 October Monorail
Engineering Unit
Valid For Construction

GENERAL NOTES:

1. THE DIMENSIONS SHOWN ARE NOMINAL (IN MILLIMETERS), U.N.O.
2. WELD SIZESHALL BE AISC MINIMUM OF 6 mm UNLESS NOTED OTHERWISE.
3. ALL FIELD WELDS SHALL BE INSPECTED PER QUALITY ASSURANCE AND SPECIAL INSPECTIONS.

REFERENCE DRAWINGS

1	93M-BOA-NAT-LOT-04833
2	93M-BOA-NAT-LOT-09170
3	93M-BOA-NAT-LOT-01976
4	93M-BOA-NAT-LOT-20021
5	
6	
7	
8	
9	

6TH OF OCTOBER CITY RAIL TRANSIT MONORAIL

The Authority — Hill International Consultant — Main Contractor — Structural Designer

KEY PLAN:

SCALE	SHOPDRAWING	DATE
AS SHOWN		12/05/2023

REV	DATE	DSG.	CHK.	APP.	AMENDMENTS	STATUS
B	12/05/2023	M.KH	M.KH	DR.M.M	ISSUED FOR INFORMATION	IFI
A	11/20/2022	M.KH	M.KH	DR.M.M	ISSUED FOR INFORMATION	IFI

DRAWING TITLE
6TH OF OCTOBER MONORAIL
SERVICE WALKWAYS
ZONE (1008)
Z8-PO011

Project Code	Rubric	Initiator	Lot	Ref	Number	Revision
93M	047	6ACC	60DEP	DWG	08362	B

Tekla structures

approval is subject to approval of coordination package between multi-discipline

REVIEWED WITH COMMENT
MONORAILS PROJECT

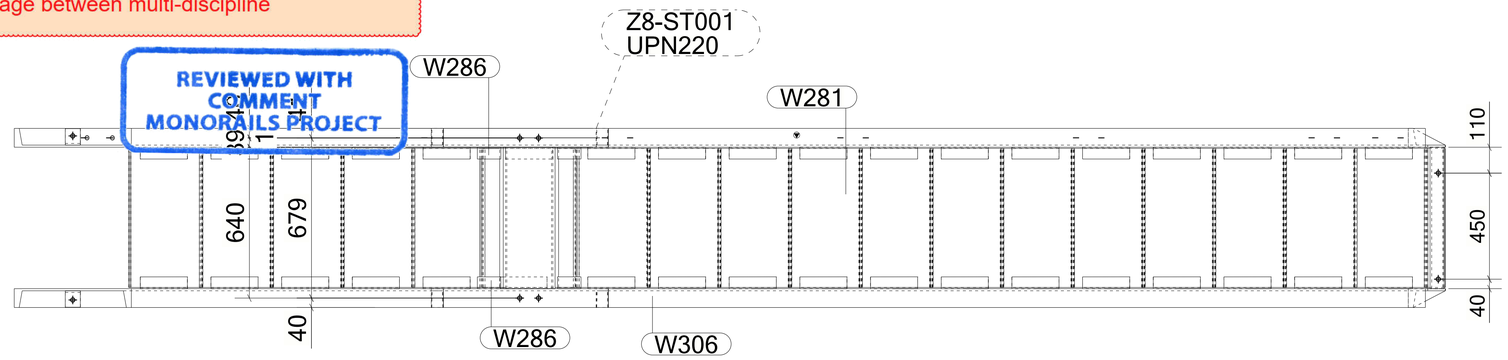

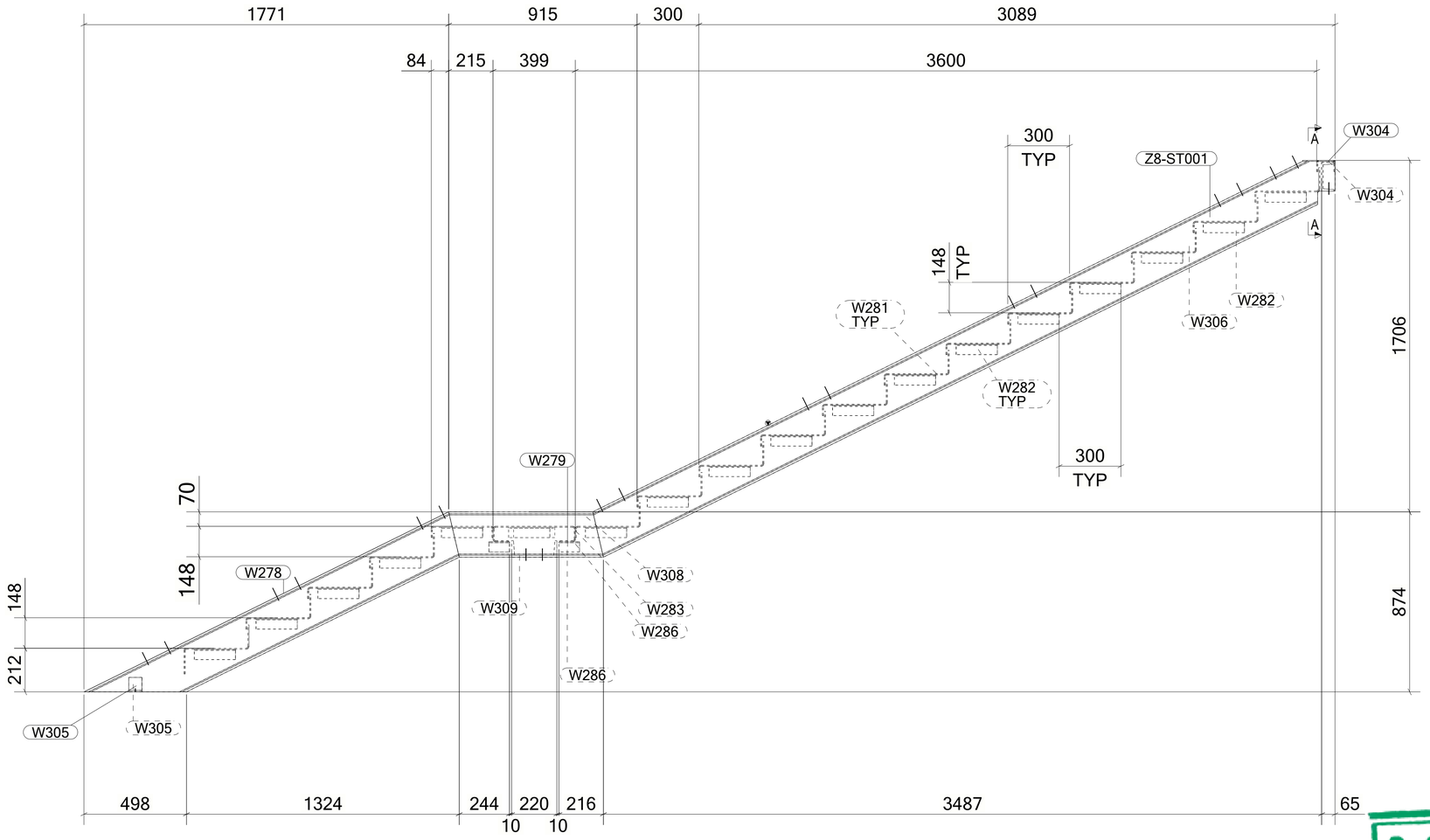

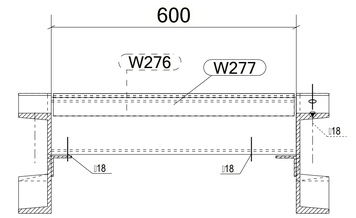

A - A

MATERIAL LIST FOR ASSEMBLY MK'D **Z8-ST001**

Mark	Profile	GRADE	No.	Length	Area	Weight
Z8-ST001	UPN220	S235JR	1	4036	2.91	118.49
W276	UPN140	S235JR	1	600	0.29	9.61
W277	CHQD_PL5*182.5	S235JR	1	590	0.22	4.19
W278	UPN220	S235JR	1	1974	1.42	57.95
W279	UPN220	S235JR	1	751	0.54	22.06
W280	CHQD_PL5*540	S235JR	1	590	0.65	12.47
W281	CHQD_PL5*470	S235JR	14	590	0.56	10.85
W282	L50*5	S235JR	36	200	0.04	0.75
W283	CHQD_PL5*590	S235JR	1	663	0.79	15.13
W284	CHQD_PL5*469.8	S235JR	1	590	0.56	10.85
W285	CHQD_PL5*393	S235JR	1	590	0.47	9.08
W286	L50*5	S235JR	4	100	0.02	0.37
W304	PL5*80	S355JR	2	157	0.02	0.30
W305	L70*7	S235JR	2	64	0.02	0.47
W306	UPN220	S235JR	1	4036	2.91	118.49
W307	UPN220	S235JR	1	1974	1.42	57.95
W308	UPN220	S235JR	1	751	0.54	22.06
W309	UPN220	S235JR	1	600	0.43	17.62
				Total	22.70	657.75

BOLT LIST:-

BOLT \ STUD	BOLT DESCRIPTION		QTY	FINISH
BOLT	B1N2W 16 X 50	A325M	6	

1 *REQUIRED AS DRAWN MARKED* **Z8-ST001**

GENERAL NOTES:

1. THE DIMENSIONS SHOWN ARE NOMINAL (IN MILLIMETERS), U.N.O.
2. WELD SIZESHALL BE AISC MINIMUM OF 6 mm UNLESS NOTED OTHERWISE.
3. ALL FIELD WELDS SHALL BE INSPECTED PER QUALITY ASSURANCE AND SPECIAL INSPECTIONS.

REFERENCE DRAWINGS

1	93M-BOA-NAT-LOT-04833
2	93M-BOA-NAT-LOT-09170
3	93M-BOA-NAT-LOT-01976
4	93M-BOA-NAT-LOT-20021
5	
6	
7	
8	
9	

6TH OF OCTOBER CITY RAIL TRANSIT MONORAIL

The Authority — Hill International Consultant — Main Contractor — Structural Designer

KEY PLAN:

6 October Monorail
Engineering Unit
Valid For Construction

SCALE	SHOPDRAWING	DATE
AS SHOWN		12/05/2023

REV	DATE	DSG.	CHK.	APP.	AMENDMENTS	STATUS
B	12/05/2023	M.KH	M.KH	DR.M.M	ISSUED FOR INFORMATION	IFI
A	11/20/2022	M.KH	M.KH	DR.M.M	ISSUED FOR INFORMATION	IFI

DRAWING TITLE
6TH OF OCTOBER MONORAIL
SERVICE WALKWAYS
ZONE (1008)
Z8-ST001

Project Code	Rubric	Initiator	Lot	Ref	Number	Revision
93M	476	ACC	60DEP	DWG	08363	B

Tekla structures

approval is subject to approval of coordination package between multi-discipline

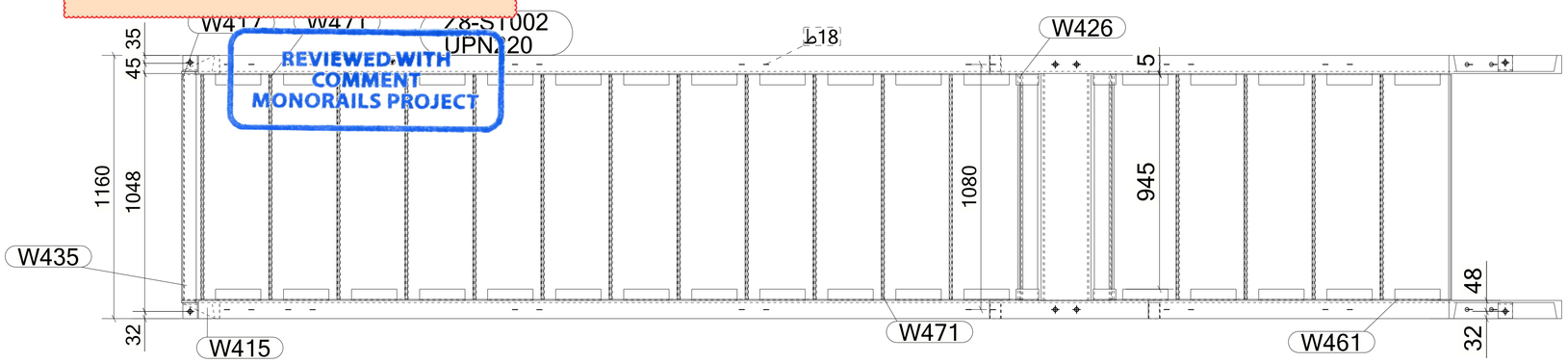

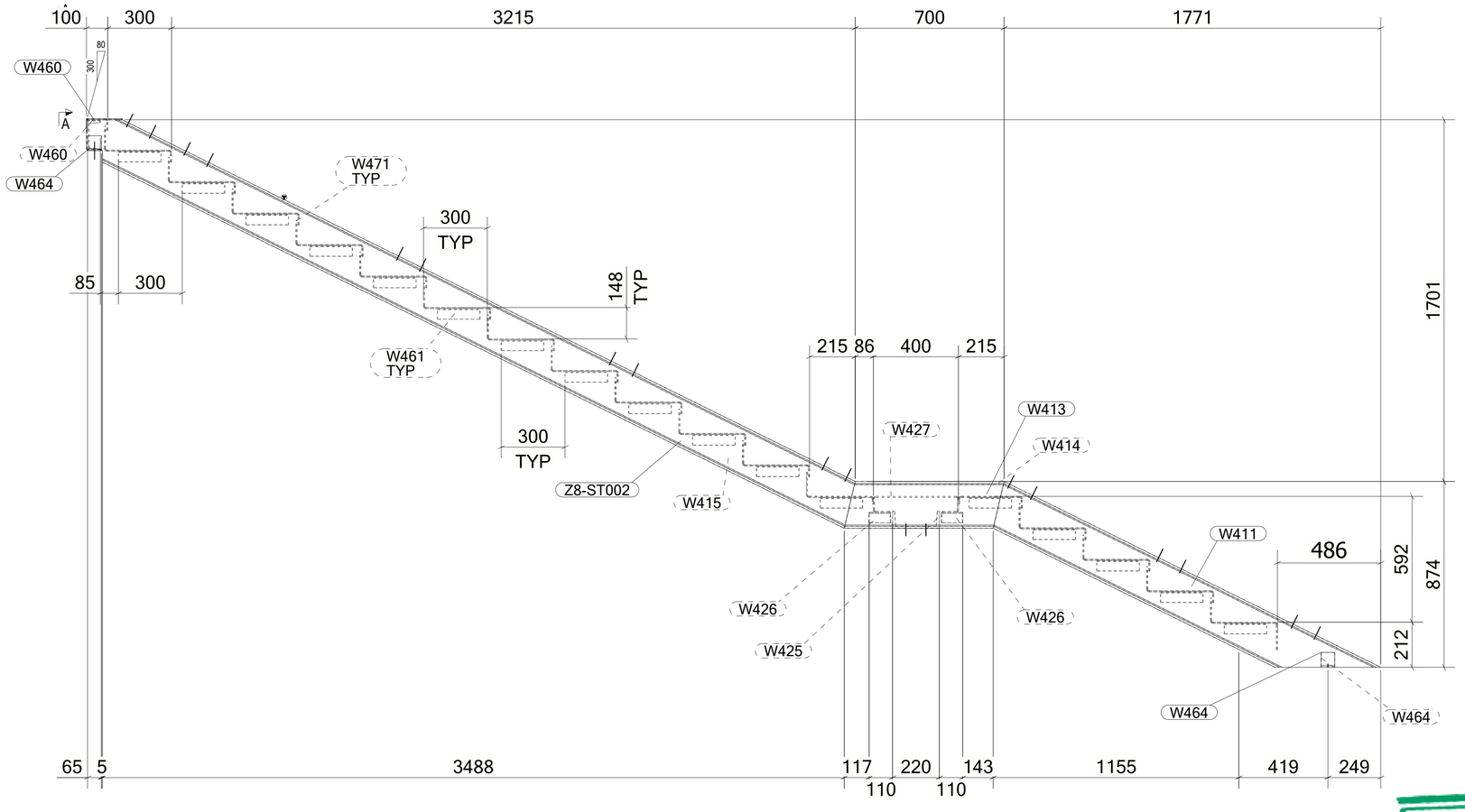

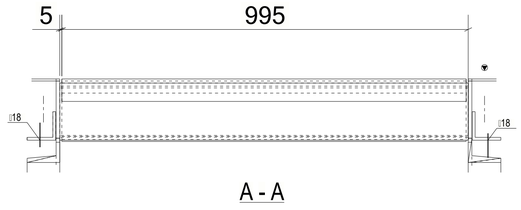

MATERIAL LIST FOR ASSEMBLY MK'D **Z8-ST002**

Mark	Profile	GRADE	No.	Length	Area	Weight
Z8-ST002	UPN220	S235JR	1	4045	2.91	118.77
W411	UPN220	S235JR	1	1975	1.42	57.98
W412	UPN220	S235JR	1	1975	1.42	57.98
W413	UPN220	S235JR	1	752	0.54	22.06
W414	UPN220	S235JR	1	752	0.54	22.06
W415	UPN220	S235JR	1	4045	2.91	118.77
W416	CHQD_PL5*371.5	S235JR	1	990	0.75	14.38
W417	CHQD_PL5*193.6	S235JR	1	990	0.39	7.48
W425	UPN220	S235JR	1	1000	0.72	29.36
W426	L50*5	S235JR	4	100	0.02	0.37
W427	CHQD_PL5*667.1	S235JR	1	1000	1.35	26.10
W428	CHQD_PL5*449.5	S235JR	1	990	0.90	17.41
W435	UPN140	S235JR	1	1000	0.49	16.02
W460	PL5*80	S355JR	2	168	0.02	0.32
W461	L50*5	S235JR	34	200	0.04	0.75
W464	L70*7	S235JR	4	64	0.02	0.47
W471	CHQD_PL5*470	S235JR	14	990	0.94	18.21
W472	CHQD_PL5*543	S235JR	1	990	1.09	21.05
				Total	30.26	813.71

BOLT LIST:-

BOLT \ STUD	BOLT DESCRIPTION	QTY	FINISH
BOLT	B1N2W 16 X 50 A325M	2	

1 *REQUIRED AS DRAWN MARKED* **Z8-ST002**

6 October Monorail
Engineering Unit
Valid For Construction

GENERAL NOTES:

1. THE DIMENSIONS SHOWN ARE NOMINAL (IN MILLIMETERS), U.N.O.
2. WELD SIZESHALL BE AISC MINIMUM OF 6 mm UNLESS NOTED OTHERWISE.
3. ALL FIELD WELDS SHALL BE INSPECTED PER QUALITY ASSURANCE AND SPECIAL INSPECTIONS.

REFERENCE DRAWINGS

1	93M-BOA-NAT-LOT-04833
2	93M-BOA-NAT-LOT-09170
3	93M-BOA-NAT-LOT-01976
4	93M-BOA-NAT-LOT-20021
5	
6	
7	
8	
9	

6TH OF OCTOBER CITY RAIL TRANSIT MONORAIL

The Authority | Consultant: Hill International | Main Contractor: ORASCOM / BOMBARDIER | Structural Designer: INNOVA

KEY PLAN:

SCALE	SHOPDRAWING	DATE
AS SHOWN		12/05/2023

REV	DATE	DSG.	CHK.	APP.	AMENDMENTS	STATUS
B	12/05/2023	M.KH	M.KH	DR.M.M	ISSUED FOR INFORMATION	IFI
A	11/20/2022	M.KH	M.KH	DR.M.M	ISSUED FOR INFORMATION	IFI

DRAWING TITLE
6TH OF OCTOBER MONORAIL
SERVICE WALKWAYS
ZONE (1008)
Z8-ST002

Project Code	Rubric	Initiator	Lot	Ref	Number	Revision
9 3 M	0 4 7 6	A C C	6 0 D E P	D W G	0 8 3 6 4	B

Tekla structures

approval is subject to approval of coordination package between multi-discipline

REVIEWED WITH COMMENT
MONORAILS PROJECT

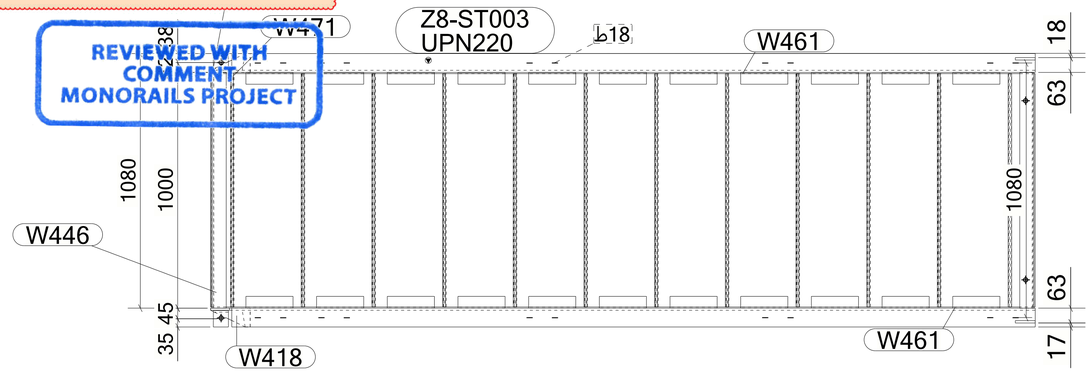

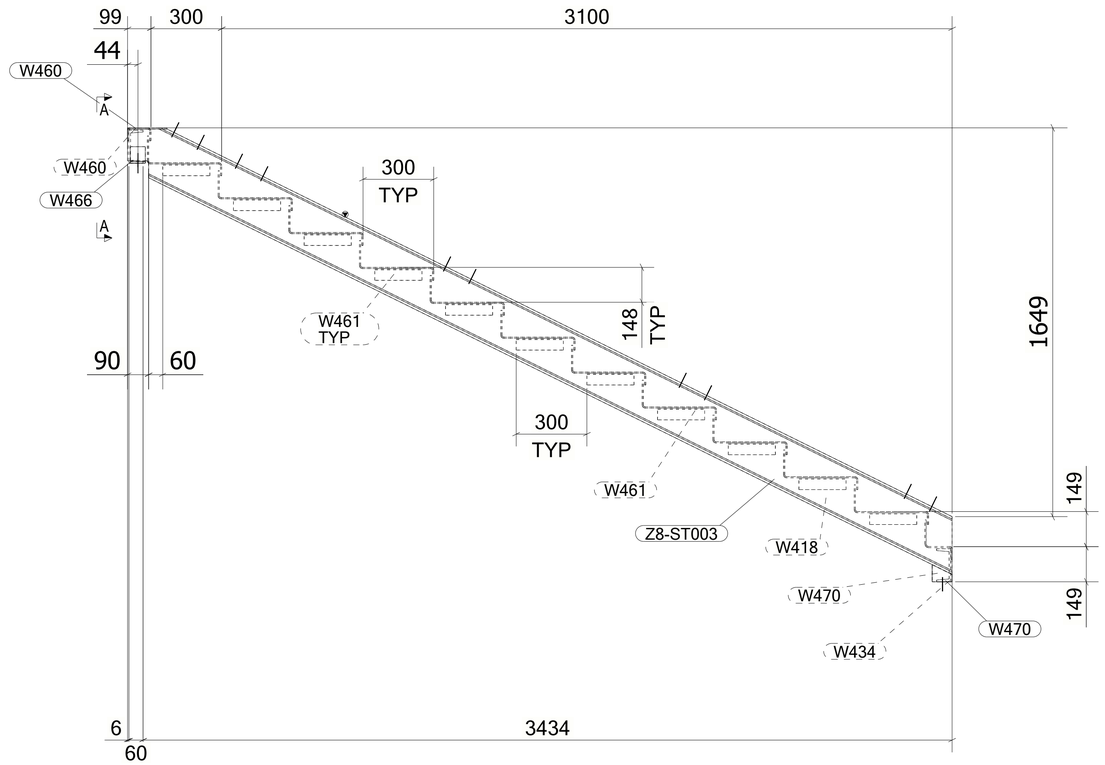

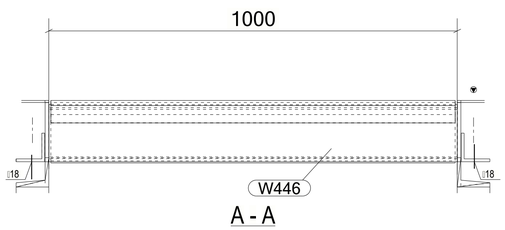

MATERIAL LIST FOR ASSEMBLY MK'D **Z8-ST003**

Mark	Profile	GRADE	No.	Length	Area	Weight
Z8-ST003	UPN220	S235JR	1	3974	2.86	116.69
W418	UPN220	S235JR	1	3974	2.86	116.69
W419	CHQD_PL5*190.9	S235JR	1	990	0.39	7.37
W434	UPN140	S235JR	1	1000	0.49	16.02
W436	CHQD_PL5*269.8	S235JR	1	990	0.55	10.43
W446	UPN140	S235JR	1	1000	0.49	16.02
W460	PL5*80	S355JR	2	168	0.02	0.32
W461	L50*5	S235JR	22	200	0.04	0.75
W465	L70*7	S235JR	1	64	0.02	0.47
W466	L70*7	S235JR	1	64	0.02	0.47
W470	PL10*72.9	S355JR	2	85	0.01	0.35
W471	CHQD_PL5*470	S235JR	11	990	0.94	18.21
				Total	19.03	502.17

BOLT LIST:-

BOLT \ STUD	BOLT DESCRIPTION	QTY	FINISH
BOLT	B1N2W 16 X 50 A325M	2	

1 *REQUIRED AS DRAWN MARKED* **Z8-ST003**

6 October Monorail
Engineering Unit
Valid For Construction

GENERAL NOTES:

1. THE DIMENSIONS SHOWN ARE NOMINAL (IN MILLIMETERS), U.N.O.
2. WELD SIZESHALL BE AISC MINIMUM OF 6 mm UNLESS NOTED OTHERWISE.
3. ALL FIELD WELDS SHALL BE INSPECTED PER QUALITY ASSURANCE AND SPECIAL INSPECTIONS.

REFERENCE DRAWINGS

1	93M-BOA-NAT-LOT-04833
2	93M-BOA-NAT-LOT-09170
3	93M-BOA-NAT-LOT-01976
4	93M-BOA-NAT-LOT-20021
5	
6	
7	
8	
9	

6TH OF OCTOBER CITY RAIL TRANSIT MONORAIL

The Authority | Consultant: Hill International | Main Contractor: ORASCOM CONSTRUCTION / BOMBARDIER | Structural Designer: INNOVA TRANSPORTATION

KEY PLAN:

SCALE	SHOPDRAWING	DATE
AS SHOWN		12/05/2023

REV	DATE	DSG.	CHK.	APP.	AMENDMENTS	STATUS
B	12/05/2023	MKH	MKH	DR.M.M	ISSUED FOR INFORMATION	IFI
A	11/20/2022	MKH	MKH	DR.M.M	ISSUED FOR INFORMATION	IFI

DRAWING TITLE
6TH OF OCTOBER MONORAIL
SERVICE WALKWAYS
ZONE (1008)
Z8-ST003

Project Code	Rubric	Initiator	Lot	Ref	Number	Revision
93M	047	6ACC	60DE	PDWG	08365	B

Tekla structures

approval is subject to approval of coordination package between multi-discipline

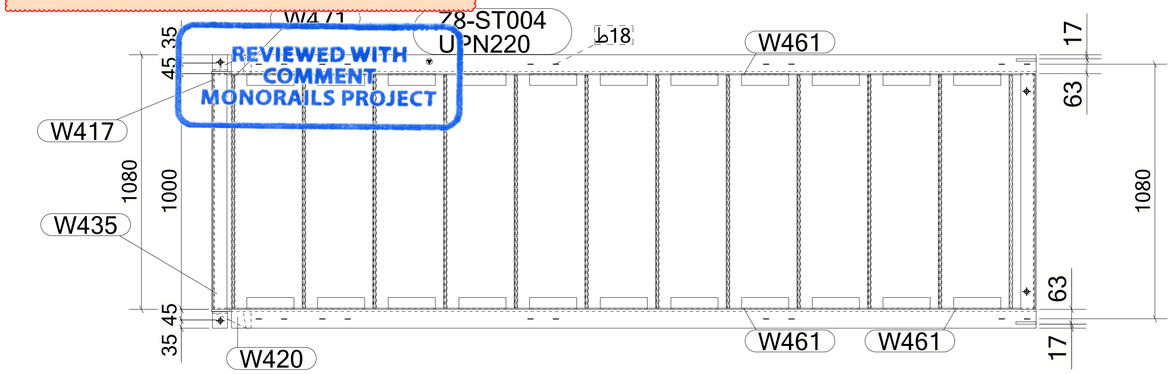

REVIEWED WITH COMMENT
MONORAILS PROJECT

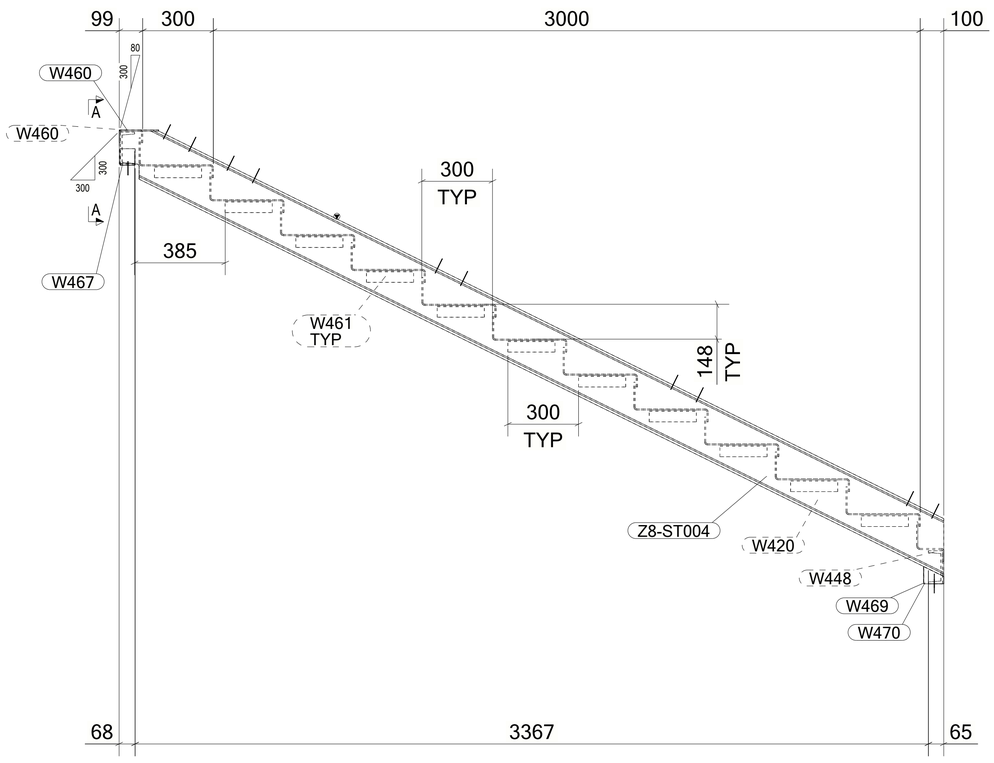

MATERIAL LIST FOR ASSEMBLY MK'D **Z8-ST004**

Mark	Profile	GRADE	No.	Length	Area	Weight
Z8-ST004	UPN220	S235JR	1	3974	2.86	116.68
W417	CHQD_PL5*192.9	S235JR	1	990	0.39	7.46
W420	UPN220	S235JR	1	3974	2.86	116.68
W435	UPN140	S235JR	1	1000	0.49	16.02
W436	CHQD_PL5*269.6	S235JR	1	990	0.55	10.42
W448	UPN140	S235JR	1	1000	0.49	16.02
W460	PL5*80	S355JR	2	167	0.02	0.32
W461	L50*5	S235JR	22	200	0.04	0.75
W467	L70*7	S235JR	1	64	0.02	0.47
W468	L70*7	S235JR	1	64	0.02	0.47
W469	PL10*73.2	S355JR	1	86	0.01	0.35
W470	PL10*72.9	S355JR	1	85	0.01	0.35
W471	CHQD_PL5*470	S235JR	11	990	0.94	18.21
				Total	19.03	502.25

BOLT LIST:-

BOLT \ STUD	BOLT DESCRIPTION	QTY	FINISH
BOLT	B1N2W 16 X 50 A325M	2	

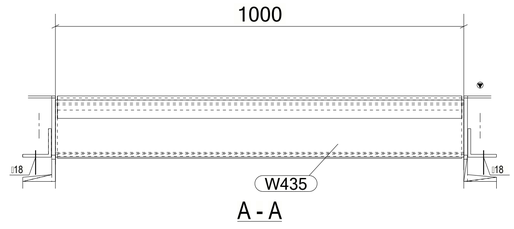

A - A

1 *REQUIRED AS DRAWN MARKED* **Z8-ST004**

6 October Monorail
Engineering Unit
Valid For Construction

GENERAL NOTES:

1. THE DIMENSIONS SHOWN ARE NOMINAL (IN MILLIMETERS), U.N.O.
2. WELD SIZESHALL BE AISC MINIMUM OF 6 mm UNLESS NOTED OTHERWISE.
3. ALL FIELD WELDS SHALL BE INSPECTED PER QUALITY ASSURANCE AND SPECIAL INSPECTIONS.

REFERENCE DRAWINGS

1	93M-BOA-NAT-LOT-04833
2	93M-BOA-NAT-LOT-09170
3	93M-BOA-NAT-LOT-01976
4	93M-BOA-NAT-LOT-20021
5	
6	
7	
8	
9	

6TH OF OCTOBER CITY RAIL TRANSIT MONORAIL

The Authority — Hill International Consultant — Main Contractor — Structural Designer

KEY PLAN:

REV	DATE	DSG.	CHK.	APP.	AMENDMENTS	STATUS
B	12/05/2023	M.KH	M.KH	DR.M.M	ISSUED FOR INFORMATION	IFI
A	11/20/2022	M.KH	M.KH	DR.M.M	ISSUED FOR INFORMATION	IFI

SCALE: AS SHOWN | SHOPDRAWING | DATE: 12/05/2023

DRAWING TITLE
6TH OF OCTOBER MONORAIL
SERVICE WALKWAYS
ZONE (1008)
Z8-ST004

Project Code	Rubric	Initiator	Lot	Ref	Number	Revision
93M	047	6ACC	60DEP	DWG	08366	B

Tekla structures

approval is subject to approval of coordination package between multi-discipline

REVIEWED WITH COMMENT
MONORAILS PROJECT

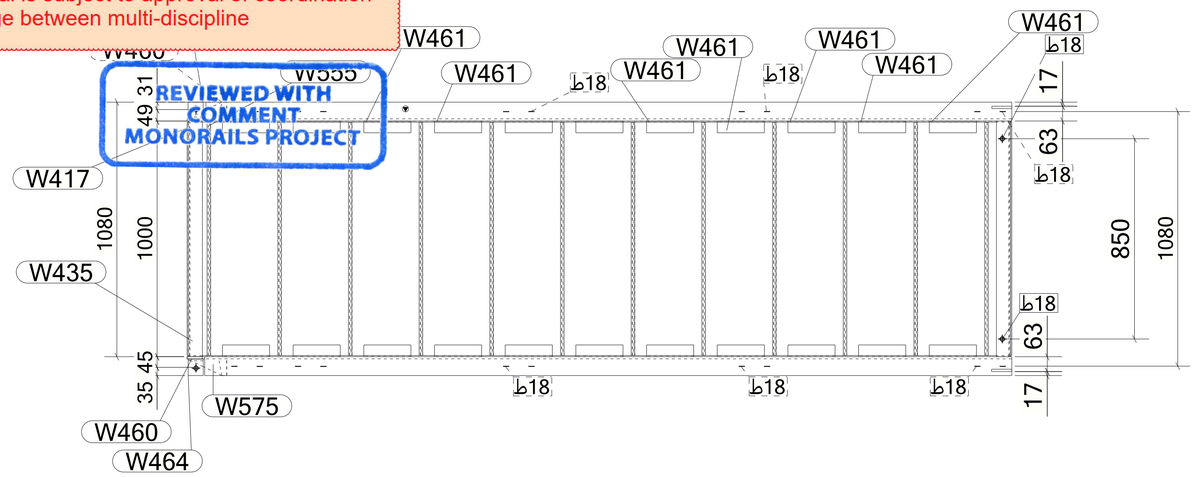

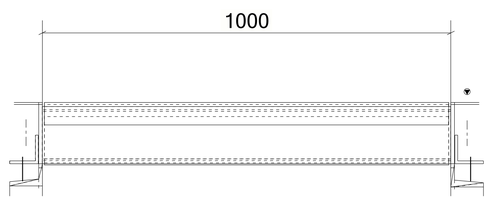

A - A

MATERIAL LIST FOR ASSEMBLY MK'D **Z8-ST005**

Mark	Profile	GRADE	No.	Length	Area	Weight
Z8-ST005	UPN220	S235JR	1	3971	2.86	116.58
W417	CHQD_PL5*193.6	S235JR	1	990	0.39	7.48
W435	UPN140	S235JR	1	1000	0.49	16.02
W436	CHQD_PL5*269.6	S235JR	1	990	0.55	10.42
W448	UPN140	S235JR	1	1000	0.49	16.02
W460	PL5*80	S355JR	2	168	0.02	0.32
W461	L50*5	S235JR	22	200	0.04	0.75
W464	L70*7	S235JR	1	64	0.02	0.47
W467	L70*7	S235JR	1	64	0.02	0.47
W469	PL10*73.2	S355JR	1	86	0.01	0.35
W470	PL10*72.9	S355JR	1	85	0.01	0.35
W555	CHQD_PL5*470	S235JR	11	990	0.94	18.21
W575	UPN220	S235JR	1	3975	2.86	116.71
				Total	19.03	502.20

BOLT LIST:-

BOLT \ STUD	BOLT DESCRIPTION	QTY	FINISH
BOLT	B1N2W 16 X 50 A325M	2	

1 *REQUIRED AS DRAWN MARKED* **Z8-ST005**

GENERAL NOTES:

1. THE DIMENSIONS SHOWN ARE NOMINAL (IN MILLIMETERS), U.N.O.
2. WELD SIZESHALL BE AISC MINIMUM OF 6 mm UNLESS NOTED OTHERWISE.
3. ALL FIELD WELDS SHALL BE INSPECTED PER QUALITY ASSURANCE AND SPECIAL INSPECTIONS.

REFERENCE DRAWINGS

1	93M-BOA-NAT-LOT-04833
2	93M-BOA-NAT-LOT-09170
3	93M-BOA-NAT-LOT-01976
4	93M-BOA-NAT-LOT-20021
5	
6	
7	
8	
9	

6TH OF OCTOBER CITY RAIL TRANSIT MONORAIL

The Authority | Consultant: Hill International | Main Contractor: ORASCOM CONSTRUCTION / BOMBARDIER | Structural Designer: INNOVA TRANSPORTATION

KEY PLAN:

6 October Monorail
Engineering Unit
Valid For Construction

SCALE	SHOPDRAWING	DATE
AS SHOWN		12/05/2023

REV	DATE	DSG.	CHK.	APP.	AMENDMENTS	STATUS
B	12/05/2023	M.KH	M.KH	DR.M.M	ISSUED FOR INFORMATION	IFI
A	11/20/2022	M.KH	M.KH	DR.M.M	ISSUED FOR INFORMATION	IFI

DRAWING TITLE
6TH OF OCTOBER MONORAIL
SERVICE WALKWAYS
ZONE (1008)
Z8-ST005

Project Code	Rubric	Initiator	Lot	Ref	Number	Revision
93M	047	6ACC	60DE	PDWG	0836	B

Tekla structures

approval is subject to approval of coordination package between multi-discipline

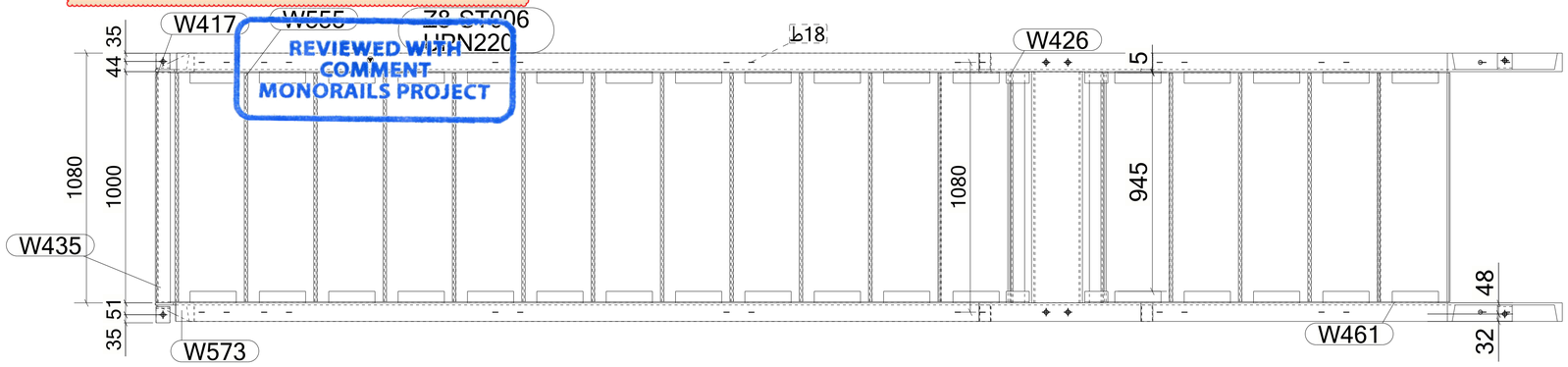

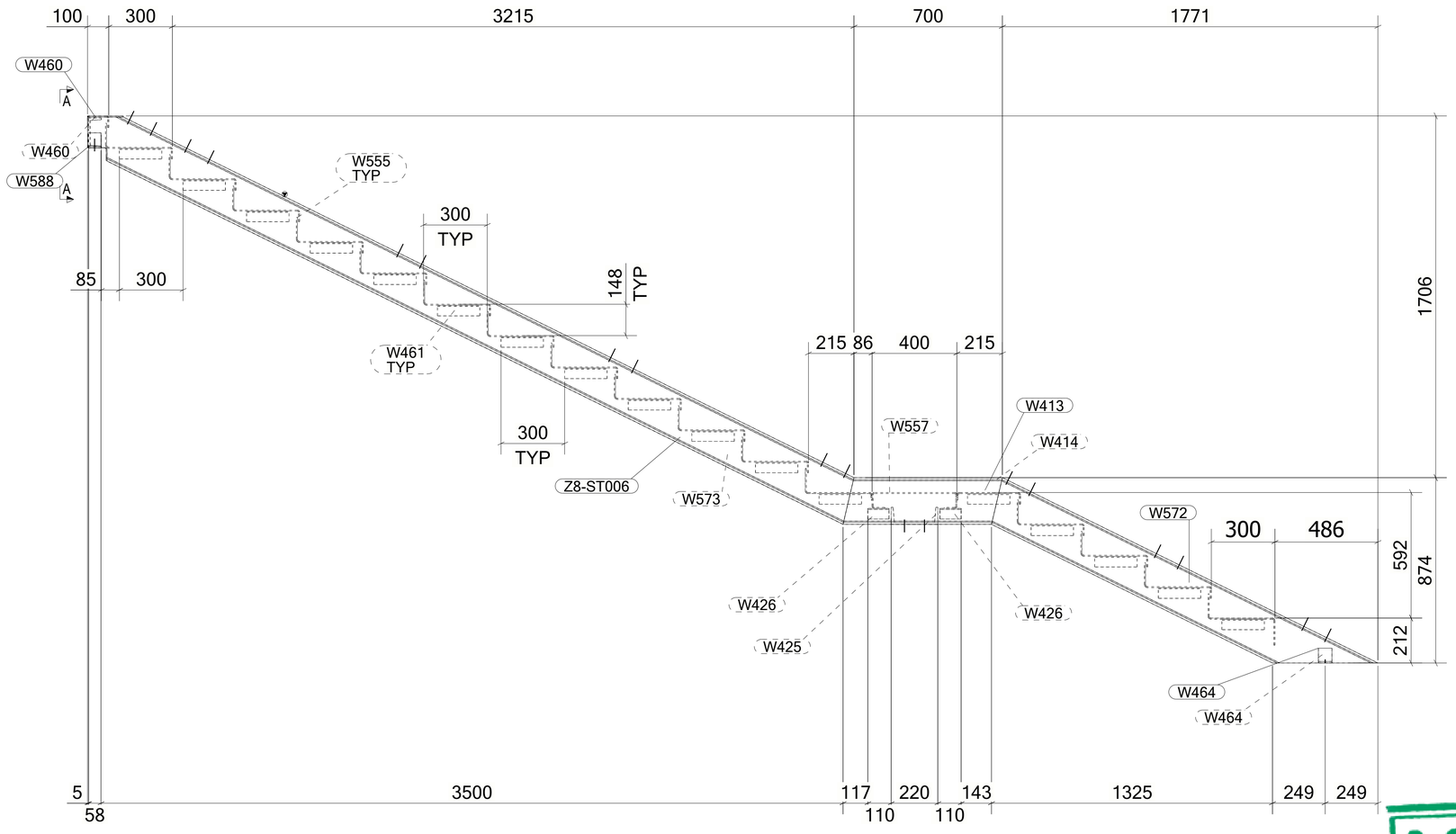

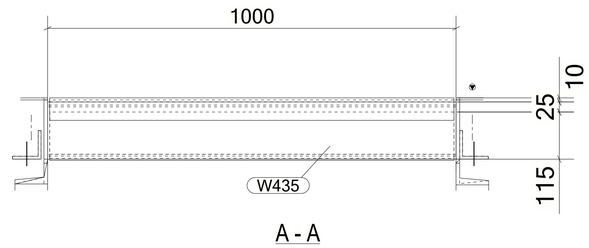

A - A

1 *REQUIRED AS DRAWN MARKED* **Z8-ST006**

MATERIAL LIST FOR ASSEMBLY MK'D **Z8-ST006**

Mark	Profile	GRADE	No.	Length	Area	Weight
Z8-ST006	UPN220	S235JR	1	4045	2.91	118.77
W413	UPN220	S235JR	1	752	0.54	22.06
W414	UPN220	S235JR	1	752	0.54	22.06
W416	CHQD_PL5*371.5	S235JR	1	990	0.75	14.38
W417	CHQD_PL5*193.6	S235JR	1	990	0.39	7.48
W425	UPN220	S235JR	1	1000	0.72	29.36
W426	L50*5	S235JR	4	100	0.02	0.37
W428	CHQD_PL5*449.5	S235JR	1	990	0.90	17.41
W435	UPN140	S235JR	1	1000	0.49	16.02
W460	PL5*80	S355JR	2	168	0.02	0.32
W461	L50*5	S235JR	34	200	0.04	0.75
W464	L70*7	S235JR	2	64	0.02	0.47
W472	CHQD_PL5*543	S235JR	1	990	1.09	21.05
W555	CHQD_PL5*470	S235JR	14	990	0.94	18.21
W557	CHQD_PL5*637.1	S235JR	1	1000	1.29	24.92
W571	UPN220	S235JR	1	1975	1.42	57.98
W572	UPN220	S235JR	1	1975	1.42	57.98
W573	UPN220	S235JR	1	4045	2.91	118.77
W588	L70*7	S235JR	2	60	0.02	0.44
				Total	30.20	812.47

BOLT LIST:-

BOLT \ STUD	BOLT DESCRIPTION		QTY	FINISH
BOLT	B1N2W 16 X 50	A325M	2	

GENERAL NOTES:

1. THE DIMENSIONS SHOWN ARE NOMINAL (IN MILLIMETERS), U.N.O.
2. WELD SIZESHALL BE AISC MINIMUM OF 6 mm UNLESS NOTED OTHERWISE.
3. ALL FIELD WELDS SHALL BE INSPECTED PER QUALITY ASSURANCE AND SPECIAL INSPECTIONS.

REFERENCE DRAWINGS

1	93M-BOA-NAT-LOT-04833
2	93M-BOA-NAT-LOT-09170
3	93M-BOA-NAT-LOT-01976
4	93M-BOA-NAT-LOT-20021
5	
6	
7	
8	
9	

6TH OF OCTOBER CITY RAIL TRANSIT MONORAIL

The Authority | Hill International Consultant | Main Contractor | Structural Designer

KEY PLAN:

6 October Monorail
Engineering Unit
Valid For Construction

SCALE	SHOPDRAWING	DATE
AS SHOWN		12/05/2023

REV	DATE	DSG.	CHK.	APP.	AMENDMENTS	STATUS
B	12/05/2023	M.KH	M.KH	DR.M.M	ISSUED FOR INFORMATION	IFI
A	11/20/2022	M.KH	M.KH	DR.M.M	ISSUED FOR INFORMATION	IFI

DRAWING TITLE
6TH OF OCTOBER MONORAIL
SERVICE WALKWAYS
ZONE (1008)
Z8-ST006

Project Code	Rubric	Initiator	Lot	Ref	Number	Revision
93M	047	ACC	60DEP	DWG	08368	B

Tekla structures

approval is subject to approval of coordination package between multi-discipline

REVIEWED WITH COMMENT
MONORAILS PROJECT

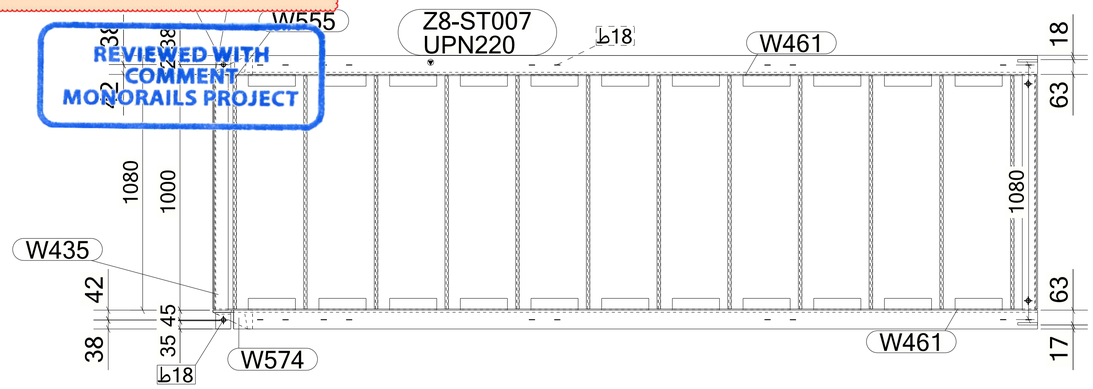

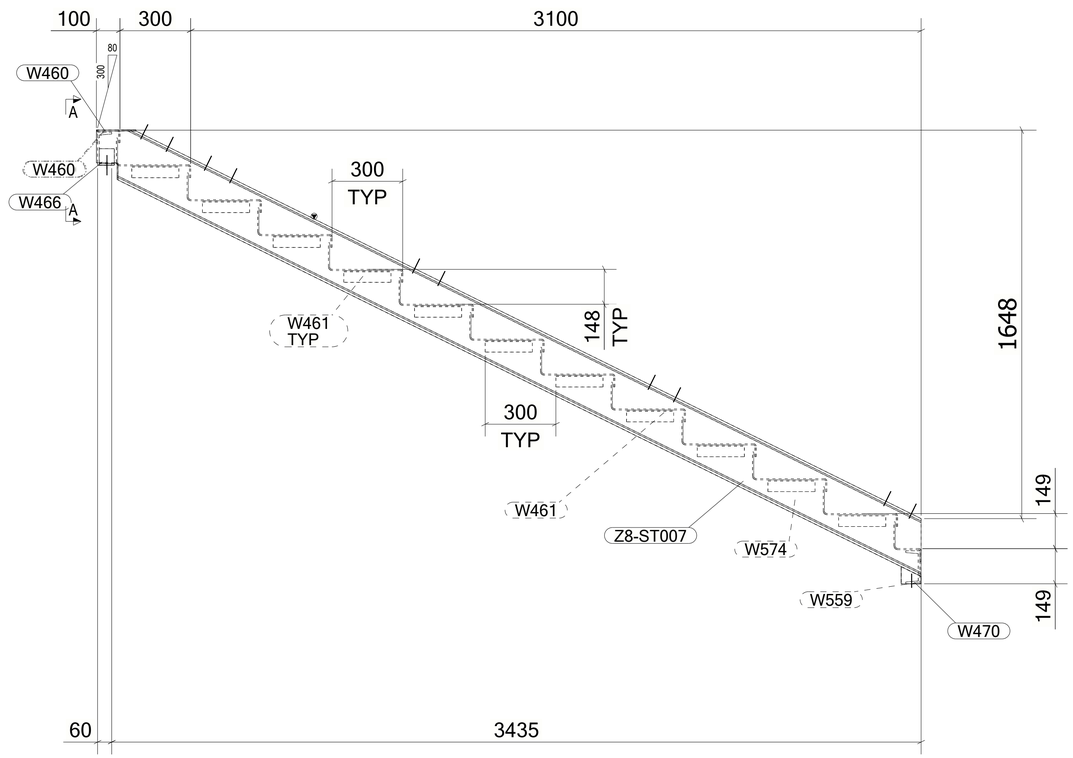

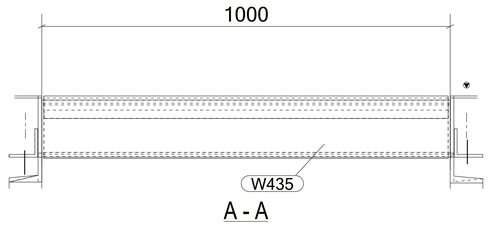

A - A

MATERIAL LIST FOR ASSEMBLY MK'D **Z8-ST007**

Mark	Profile	GRADE	No.	Length	Area	Weight
Z8-ST007	UPN220	S235JR	1	3975	2.86	116.71
W417	CHQD_PL5*193.5	S235JR	1	990	0.39	7.48
W435	UPN140	S235JR	1	1000	0.49	16.02
W436	CHQD_PL5*269.9	S235JR	1	990	0.55	10.43
W460	PL5*80	S355JR	2	168	0.02	0.32
W461	L50*5	S235JR	22	200	0.04	0.75
W465	L70*7	S235JR	1	64	0.02	0.47
W466	L70*7	S235JR	1	64	0.02	0.47
W470	PL10*72.9	S355JR	2	85	0.01	0.35
W555	CHQD_PL5*470	S235JR	11	990	0.94	18.21
W559	UPN140	S235JR	1	1000	0.49	16.02
W574	UPN220	S235JR	1	3975	2.86	116.71
				Total	19.04	502.33

BOLT LIST:-

BOLT \ STUD	BOLT DESCRIPTION	QTY	FINISH
BOLT	B1N2W 16 X 50 A325M	2	

1 *REQUIRED AS DRAWN MARKED* **Z8-ST007**

GENERAL NOTES:

1. THE DIMENSIONS SHOWN ARE NOMINAL (IN MILLIMETERS), U.N.O.
2. WELD SIZESHALL BE AISC MINIMUM OF 6 mm UNLESS NOTED OTHERWISE.
3. ALL FIELD WELDS SHALL BE INSPECTED PER QUALITY ASSURANCE AND SPECIAL INSPECTIONS.

REFERENCE DRAWINGS

1	93M-BOA-NAT-LOT-04833
2	93M-BOA-NAT-LOT-09170
3	93M-BOA-NAT-LOT-01976
4	93M-BOA-NAT-LOT-20021
5	
6	
7	
8	
9	

6TH OF OCTOBER CITY RAIL TRANSIT MONORAIL

The Authority | Consultant: Hill International | Main Contractor: ORASCOM CONSTRUCTION, BOMBARDIER | Structural Designer: INNOVA TRANSPORTATION

KEY PLAN:

6 October Monorail
Engineering Unit
Valid For Construction

SCALE	SHOPDRAWING	DATE
AS SHOWN		12/05/2023

REV	DATE	DSG.	CHK.	APP.	AMENDMENTS	STATUS
B	12/05/2023	M.KH	M.KH	DR.M.M	ISSUED FOR INFORMATION	IFI
A	11/20/2022	M.KH	M.KH	DR.M.M	ISSUED FOR INFORMATION	IFI

DRAWING TITLE
6TH OF OCTOBER MONORAIL
SERVICE WALKWAYS
ZONE (1008)
Z8-ST007

Project Code	Rubric	Initiator	Lot	Ref	Number	Revision
93M	047	6ACC	60DE	PDWG	08369	B

Tekla structures

approval is subject to approval of coordination package between multi-discipline

REVIEWED WITH COMMENT
MONORAILS PROJECT

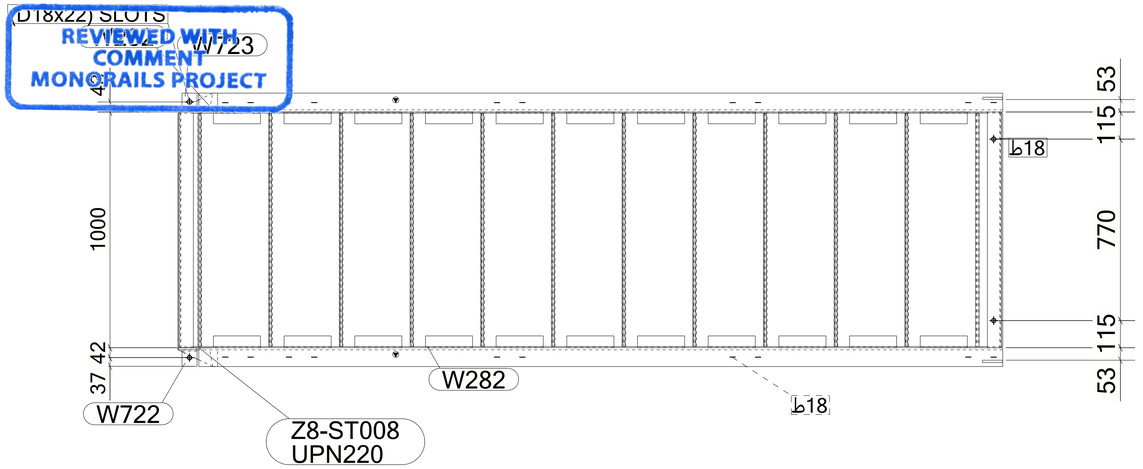

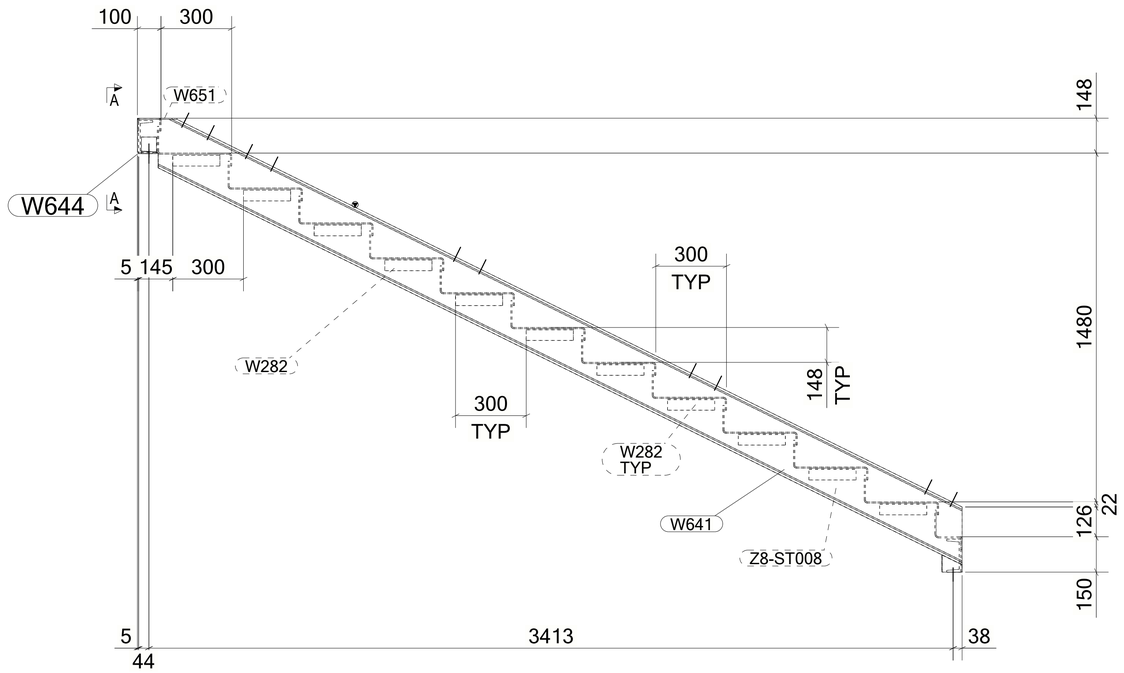

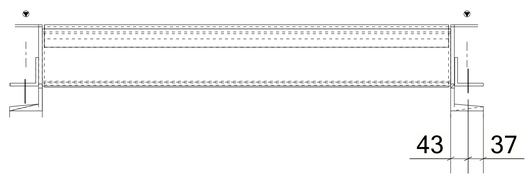

A - A

MATERIAL LIST FOR ASSEMBLY MK'D **Z8-ST008**

Mark	Profile	GRADE	No.	Length	Area	Weight
Z8-ST008	UPN220	S235JR	1	3975	2.86	116.71
W282	L50*5	S235JR	22	200	0.04	0.75
W641	UPN220	S235JR	1	3975	2.86	116.70
W644	UPN140	S235JR	1	1000	0.49	16.02
W649	CHQD_PL5*193.4	S235JR	1	990	0.39	7.47
W650	CHQD_PL5*470	S235JR	11	990	0.94	18.21
W651	PL5*80	S355JR	2	168	0.02	0.32
W653	CHQD_PL5*270.1	S235JR	1	990	0.55	10.44
W707	UPN140	S235JR	1	1000	0.49	16.02
W720	PL10*73.2	S355JR	1	86	0.01	0.35
W721	PL10*72.9	S355JR	1	85	0.01	0.35
W722	L70*7	S235JR	1	64	0.02	0.47
W723	L70*7	S235JR	1	64	0.02	0.47
				Total	19.04	502.34

BOLT LIST:-

BOLT \ STUD	BOLT DESCRIPTION	QTY	FINISH
BOLT	B1N2W 16 X 50 A325M	3	

1 *REQUIRED AS DRAWN MARKED* **Z8-ST008**

GENERAL NOTES:

1. THE DIMENSIONS SHOWN ARE NOMINAL (IN MILLIMETERS), U.N.O.
2. WELD SIZESHALL BE AISC MINIMUM OF 6 mm UNLESS NOTED OTHERWISE.
3. ALL FIELD WELDS SHALL BE INSPECTED PER QUALITY ASSURANCE AND SPECIAL INSPECTIONS.

REFERENCE DRAWINGS

1	93M-BOA-NAT-LOT-04833
2	93M-BOA-NAT-LOT-09170
3	93M-BOA-NAT-LOT-01976
4	93M-BOA-NAT-LOT-20021
5	
6	
7	
8	
9	

6TH OF OCTOBER CITY RAIL TRANSIT MONORAIL

The Authority | Consultant: Hill International | Main Contractor | Structural Designer

KEY PLAN:

6 October Monorail
Engineering Unit
Valid For Construction

SCALE	SHOPDRAWING	DATE
AS SHOWN		12/05/2023

REV	DATE	DSG.	CHK.	APP.	AMENDMENTS	STATUS
B	12/05/2023	M.KH	M.KH	DR.M.M	ISSUED FOR INFORMATION	IFI
A	11/20/2022	M.KH	M.KH	DR.M.M	ISSUED FOR INFORMATION	IFI

DRAWING TITLE
6TH OF OCTOBER MONORAIL SERVICE WALKWAYS ZONE (1008)
Z8-ST008

Project Code	Rubric	Initiator	Lot	Ref	Number	Revision
93M	047	ACC	60	DEP	DWG	08370	B

Tekla structures

approval is subject to approval of coordination package between multi-discipline

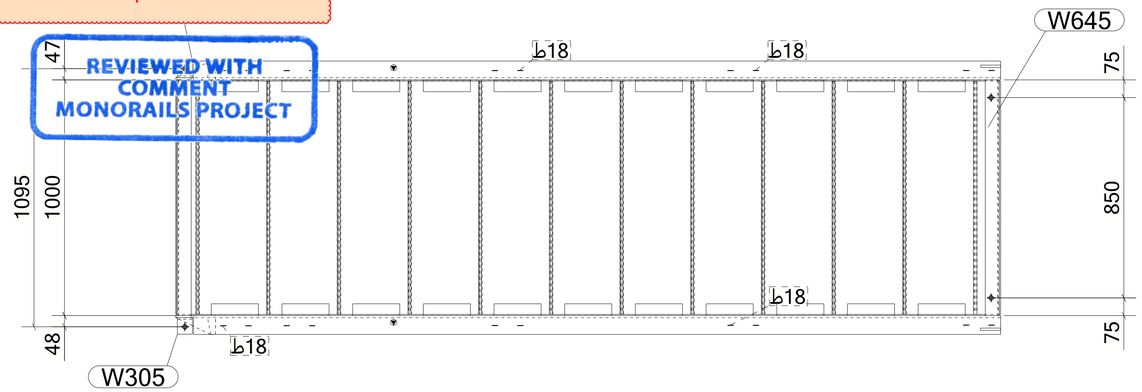

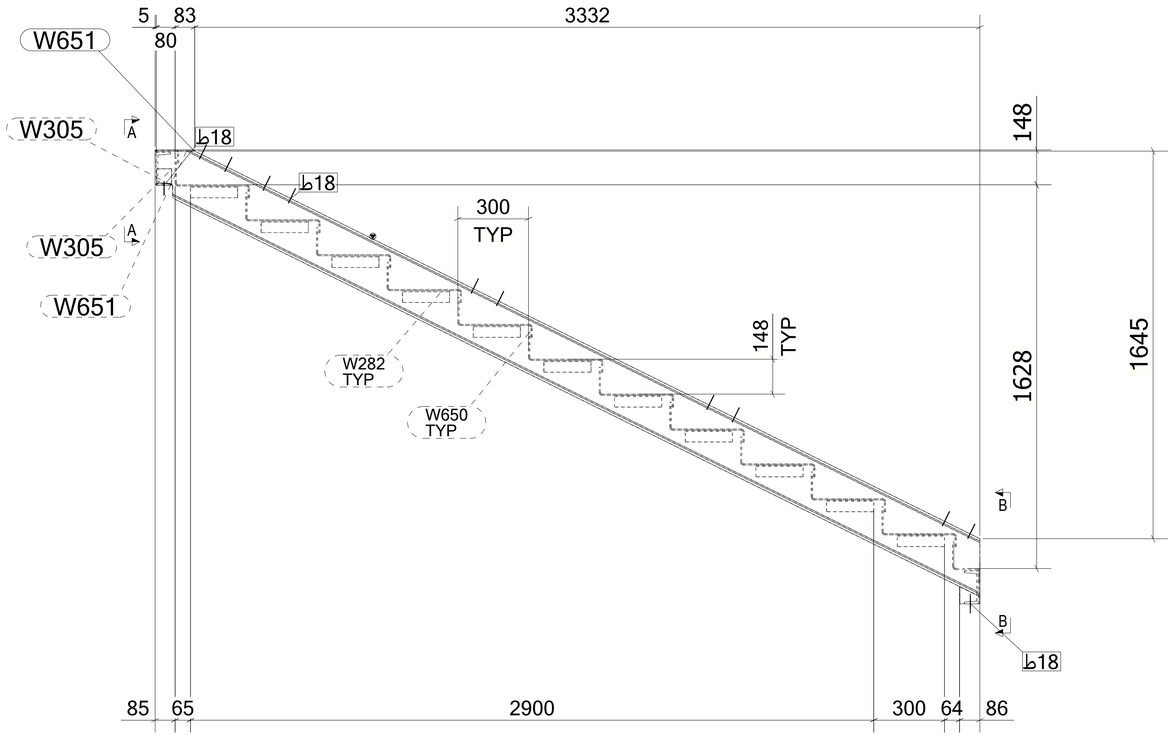

MATERIAL LIST FOR ASSEMBLY MK'D **Z8-ST009**

Mark	Profile	GRADE	No.	Length	Area	Weight
Z8-ST009	UPN220	S235JR	1	3975	2.86	116.71
W282	L50*5	S235JR	22	200	0.04	0.75
W305	L70*7	S235JR	2	64	0.02	0.47
W642	UPN220	S235JR	1	3975	2.86	116.71
W644	UPN140	S235JR	1	1000	0.49	16.02
W645	UPN140	S235JR	1	1000	0.49	16.02
W649	CHQD_PL5*193.5	S235JR	1	990	0.39	7.48
W650	CHQD_PL5*470	S235JR	11	990	0.94	18.21
W651	PL5*80	S355JR	2	168	0.02	0.32
W653	CHQD_PL5*270.3	S235JR	1	990	0.55	10.45
W720	PL10*73.2	S355JR	1	86	0.01	0.35
W721	PL10*72.9	S355JR	1	85	0.01	0.35
				Total	19.04	502.37

BOLT LIST:-

BOLT \ STUD	BOLT DESCRIPTION	QTY	FINISH
BOLT	B1N2W 16 X 50 A325M	2	

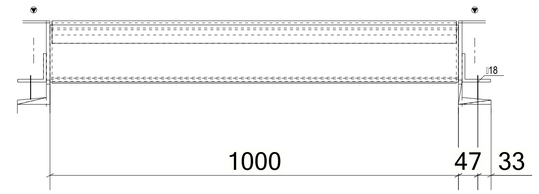

A - A

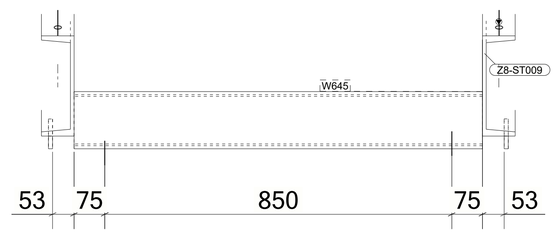

B - B

1 *REQUIRED AS DRAWN MARKED* **Z8-ST009**

6 October Monorail
Engineering Unit
Valid For Construction

GENERAL NOTES:

1. THE DIMENSIONS SHOWN ARE NOMINAL (IN MILLIMETERS), U.N.O.
2. WELD SIZESHALL BE AISC MINIMUM OF 6 mm UNLESS NOTED OTHERWISE.
3. ALL FIELD WELDS SHALL BE INSPECTED PER QUALITY ASSURANCE AND SPECIAL INSPECTIONS.

REFERENCE DRAWINGS

1	93M-BOA-NAT-LOT-04833
2	93M-BOA-NAT-LOT-09170
3	93M-BOA-NAT-LOT-01976
4	93M-BOA-NAT-LOT-20021
5	
6	
7	
8	
9	

6TH OF OCTOBER CITY RAIL TRANSIT MONORAIL

The Authority | Consultant: Hill International | Main Contractor: ORASCOM / BOMBARDIER | Structural Designer: INNOVA

KEY PLAN:

SCALE	SHOPDRAWING	DATE
AS SHOWN		12/05/2023

REV	DATE	DSG.	CHK.	APP.	AMENDMENTS	STATUS
B	12/05/2023	M.KH	M.KH	DR.M.M	ISSUED FOR INFORMATION	IFI
A	11/20/2022	M.KH	M.KH	DR.M.M	ISSUED FOR INFORMATION	IFI

DRAWING TITLE
6TH OF OCTOBER MONORAIL
SERVICE WALKWAYS
ZONE (1008)
Z8-ST009

Project Code	Rubric	Initiator	Lot	Ref	Number	Revision
93M	047	6ACC	60DE	PDWG	08371	B

Tekla structures

approval is subject to approval of coordination package between multi-discipline

REVIEWED WITH COMMENT
MONORAILS PROJECT

All holes are 22mm U.N.O Length & Area & Weight per piece

Mark	Profile	Grade	QTY	Length	Area	Weight
Z8-ST009	UPN220	S235JR	1	3975.4	2.86	116.7

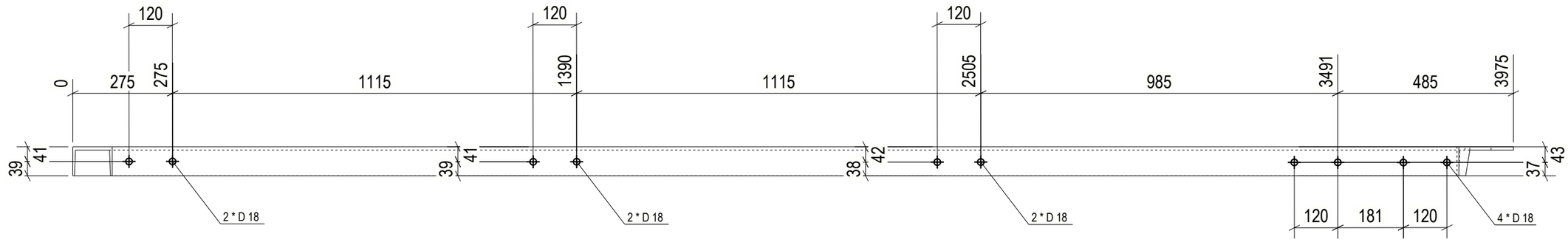

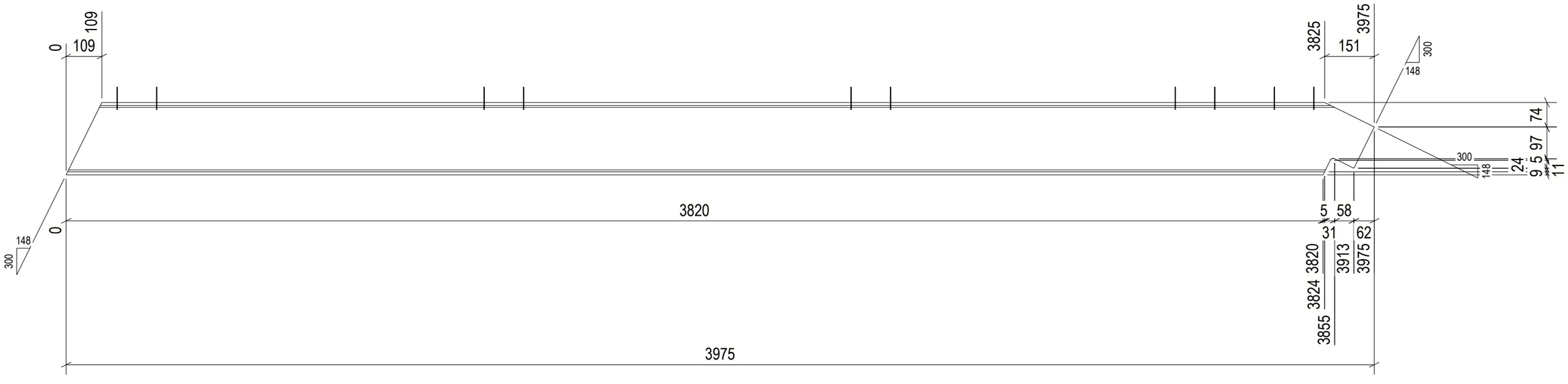

1 REQ'D AS DRAWN MK'D Z8-ST009

6 October Monorail
Engineering Unit
Valid For Construction

GENERAL NOTES:

1. THE DIMENSIONS SHOWN ARE NOMINAL (IN MILLIMETERS), U.N.O.
2. WELD SIZESHALL BE AISC MINIMUM OF 6 mm UNLESS NOTED OTHERWISE.
3. ALL FIELD WELDS SHALL BE INSPECTED PER QUALITY ASSURANCE AND SPECIAL INSPECTIONS.

REFERENCE DRAWINGS

1	93M-BOA-NAT-LOT-04833
2	93M-BOA-NAT-LOT-09170
3	93M-BOA-NAT-LOT-01976
4	93M-BOA-NAT-LOT-20021
5	
6	
7	
8	
9	

6TH OF OCTOBER CITY RAIL TRANSIT MONORAIL

The Authority | Hill International Consultant | Main Contractor | Structural Designer

KEY PLAN:

SCALE: AS SHOWN | SHOP DRAWING | DATE: 12/05/2023

REV	DATE	DRN	CHK	APP	AMENDMENT DESCRIPTION	STATUS
B	12/05/2023	M.KH	M.KH	DR.M.M	ISSUED FOR INFORMATION	IFI

DRAWING TITLE

6TH OF OCTOBER MONORAIL SERVICE WALKWAYS ZONE (1008) Z8-ST009

Project Code	Rubric	Initiator	Lot	Ref	Number	Revision
9 3	M 0 4 7 6	A	C C 6 0	D E P	D W G	0 8 3 7 2	B

Tekla structures

approval is subject to approval of coordination package between multi-discipline

REVIEWED WITH COMMENT MONORAILS PROJECT

All holes are 22mm U.N.O Length & Area & Weight per piece						
Z8-ST008	UPN220	S235JR	1	3975.2	2.86	116.7
Mark	Profile	Grade	QTY	Length	Area	Weight

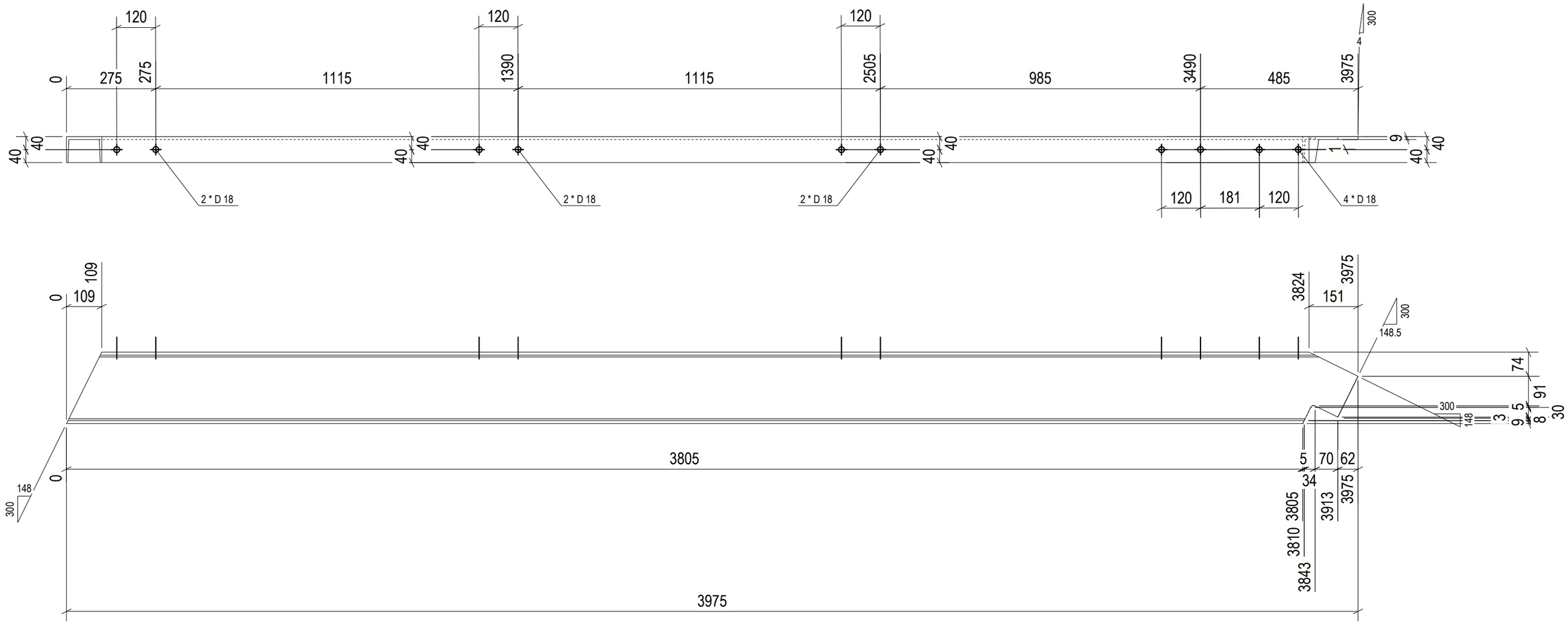

1 REQ'D AS DRAWN MK'D Z8-ST008

6 October Monorail Engineering Unit Valid For Construction

GENERAL NOTES:

1. THE DIMENSIONS SHOWN ARE NOMINAL (IN MILLIMETERS), U.N.O.
2. WELD SIZESHALL BE AISC MINIMUM OF 6 mm UNLESS NOTED OTHERWISE.
3. ALL FIELD WELDS SHALL BE INSPECTED PER QUALITY ASSURANCE AND SPECIAL INSPECTIONS.

REFERENCE DRAWINGS

1	93M-BOA-NAT-LOT-04833
2	93M-BOA-NAT-LOT-09170
3	93M-BOA-NAT-LOT-01976
4	93M-BOA-NAT-LOT-20021
5	
6	
7	
8	
9	

6TH OF OCTOBER CITY RAIL TRANSIT MONORAIL

The Authority | Hill International Consultant | ORASCOM BOMBARDIER Main Contractor | INNOVA Structural Designer

KEY PLAN:

SCALE	SHOP DRAWING	DATE
AS SHOWN		12/05/2023

REV	DATE	DSG	CHK	APP	AMENDMENTS	STATUS
B	12/05/2023	M.KH	M.KH	DR.M.M	ISSUED FOR INFORMATION	IFI

DRAWING TITLE

6TH OF OCTOBER MONORAIL SERVICE WALKWAYS ZONE (1008)
Z8-ST008

Project Code	Rubric	Initiator	Lot	Ref	Number	Revision
93M	0476	ACC	60DEP	DWG	08373	B

Tekla structures

approval is subject to approval of coordination package between multi-discipline

REVIEWED WITH COMMENT MONORAILS PROJECT

All holes are 22mm U.N.O Length & Area & Weight per piece						
Z8-ST007	UPN220	S235JR	1	3975.2	2.86	116.7
Mark	Profile	Grade	QTY	Length	Area	Weight

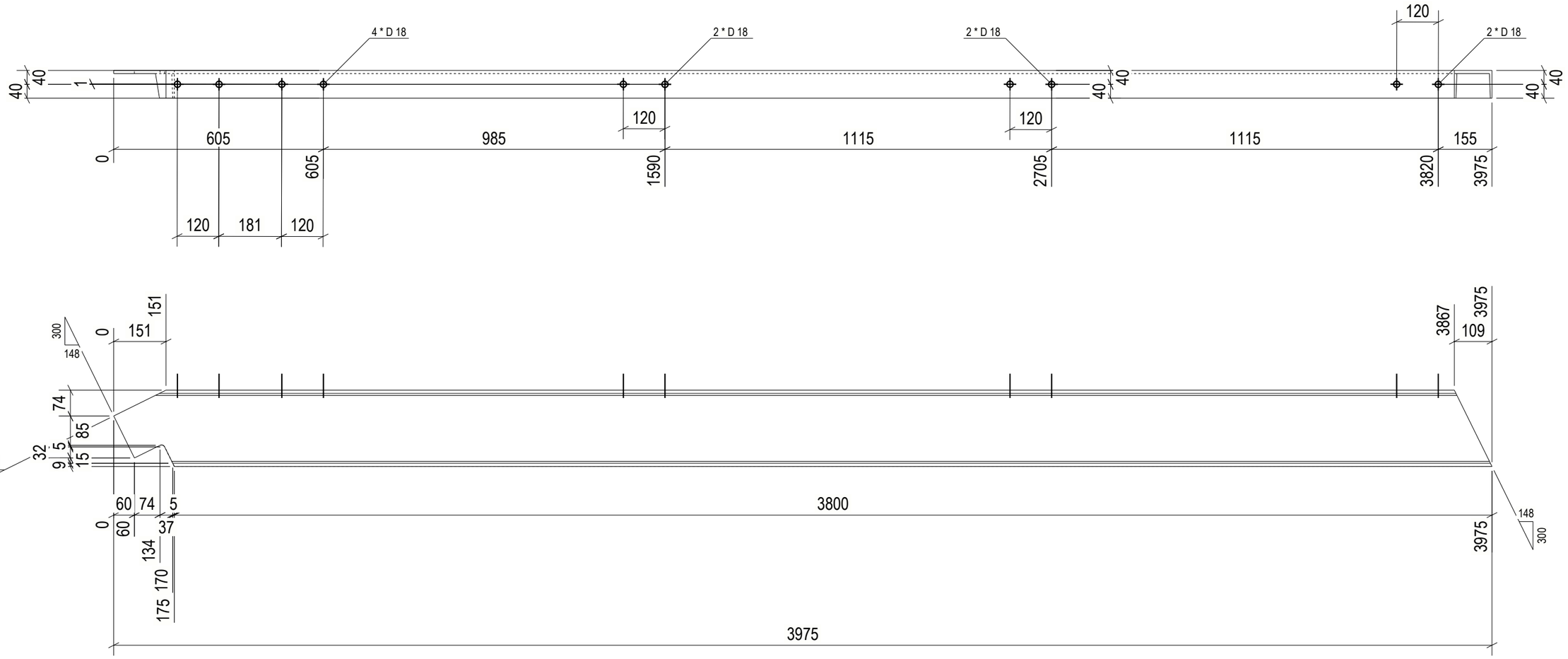

1 REQ'D AS DRAWN MK'D Z8-ST007

6 October Monorail Engineering Unit
Valid For Construction

GENERAL NOTES:

1. THE DIMENSIONS SHOWN ARE NOMINAL (IN MILLIMETERS), U.N.O.
2. WELD SIZESHALL BE AISC MINIMUM OF 6 mm UNLESS NOTED OTHERWISE.
3. ALL FIELD WELDS SHALL BE INSPECTED PER QUALITY ASSURANCE AND SPECIAL INSPECTIONS.

REFERENCE DRAWINGS

1	93M-BOA-NAT-LOT-04833
2	93M-BOA-NAT-LOT-09170
3	93M-BOA-NAT-LOT-01976
4	93M-BOA-NAT-LOT-20021
5	
6	
7	
8	
9	

6TH OF OCTOBER CITY RAIL TRANSIT MONORAIL

The Authority | Hill International Consultant | ORASCOM BOMBARDIER Main Contractor | INNOVA Structural Designer

KEY PLAN:

SCALE	SHOP DRAWING	DATE
AS SHOWN		12/05/2023

REV	DATE	DSG	CHK	APP	AMENDMENTS	STATUS
B	12/05/2023	M.KH	M.KH	DR.M.M	ISSUED FOR INFORMATION	IFI

DRAWING TITLE

6TH OF OCTOBER MONORAIL SERVICE WALKWAYS ZONE (1008)
Z8-ST007

Project Code	Rubric	Initiator	Lot	Ref	Number	Revision
93M	0476	ACC	60DEP	DWG	08374	B

Tekla structures

approval is subject to approval of coordination package between multi-discipline

REVIEWED WITH COMMENT MONORAILS PROJECT

All holes are 22mm U.N.O Length & Area & Weight per piece						
Z8-ST006	UPN220	S235JR	1	4045.3	2.91	118.8
Mark	Profile	Grade	QTY	Length	Area	Weight

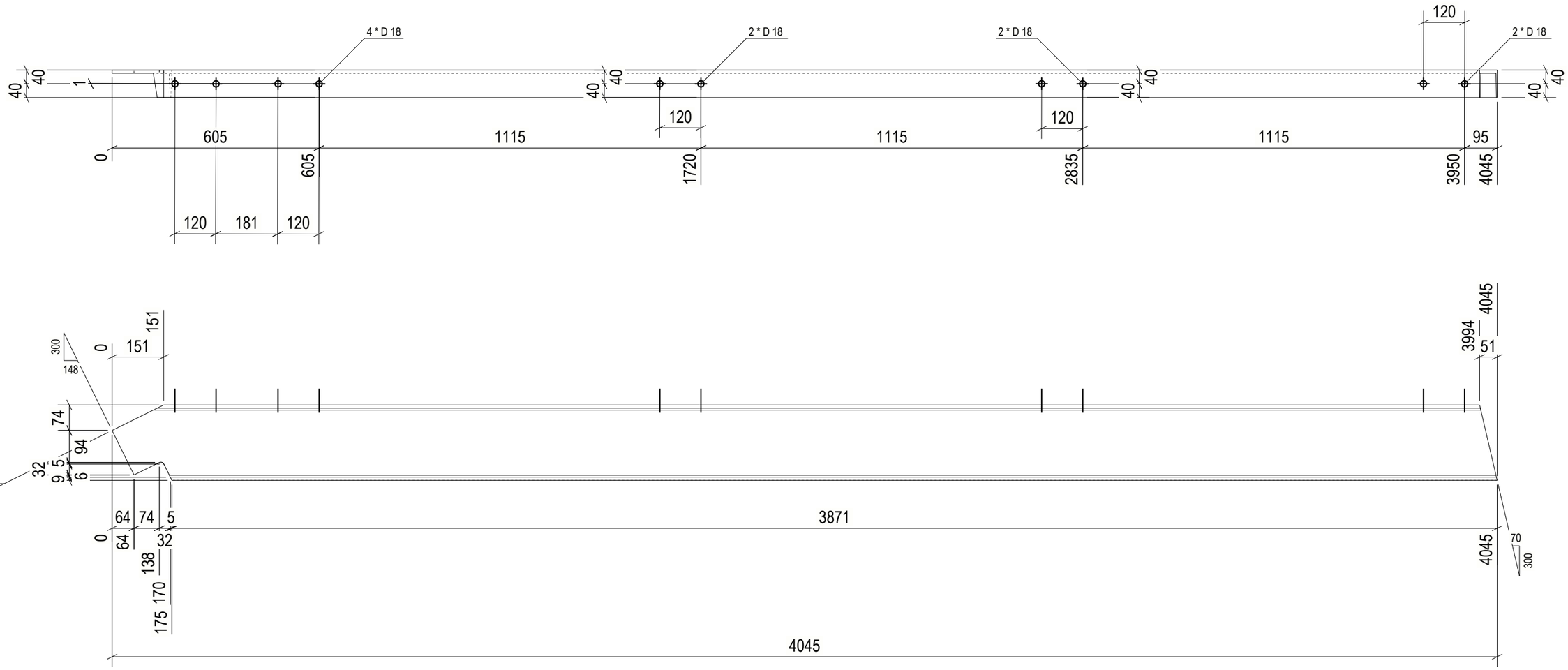

1 REQ'D AS DRAWN MK'D Z8-ST006

6 October Monorail Engineering Unit
Valid For Construction

GENERAL NOTES:

1. THE DIMENSIONS SHOWN ARE NOMINAL (IN MILLIMETERS), U.N.O.
2. WELD SIZESHALL BE AISC MINIMUM OF 6 mm UNLESS NOTED OTHERWISE.
3. ALL FIELD WELDS SHALL BE INSPECTED PER QUALITY ASSURANCE AND SPECIAL INSPECTIONS.

REFERENCE DRAWINGS

1	93M-BOA-NAT-LOT-04833
2	93M-BOA-NAT-LOT-09170
3	93M-BOA-NAT-LOT-01976
4	93M-BOA-NAT-LOT-20021
5	
6	
7	
8	
9	

6TH OF OCTOBER CITY RAIL TRANSIT MONORAIL

The Authority | Hill International Consultant | ORASCOM BOMBARDIER Main Contractor | INNOVA Structural Designer

KEY PLAN:

SCALE	SHOP DRAWING	DATE
AS SHOWN		12/05/2023

REV	DATE	DSG	CHK	APP	AMENDMENTS	STATUS
B	12/05/2023	M.KH	M.KH	DR.M.M	ISSUED FOR INFORMATION	IFI
1	17/4/2022					

DRAWING TITLE

6TH OF OCTOBER MONORAIL SERVICE WALKWAYS ZONE (1008)
Z8-ST006

Project Code	Rubric	Initiator	Lot	Ref	Number	Revision
93M	0476	ACC	60DEP	DWG	08375	B

Tekla structures

approval is subject to approval of coordination package between multi-discipline

REVIEWED WITH COMMENT MONORAILS PROJECT

All holes are 22mm U.N.O Length & Area & Weight per piece						
Z8-ST005	UPN220	S235JR	1	3970.7	2.86	116.6
Mark	Profile	Grade	QTY	Length	Area	Weight

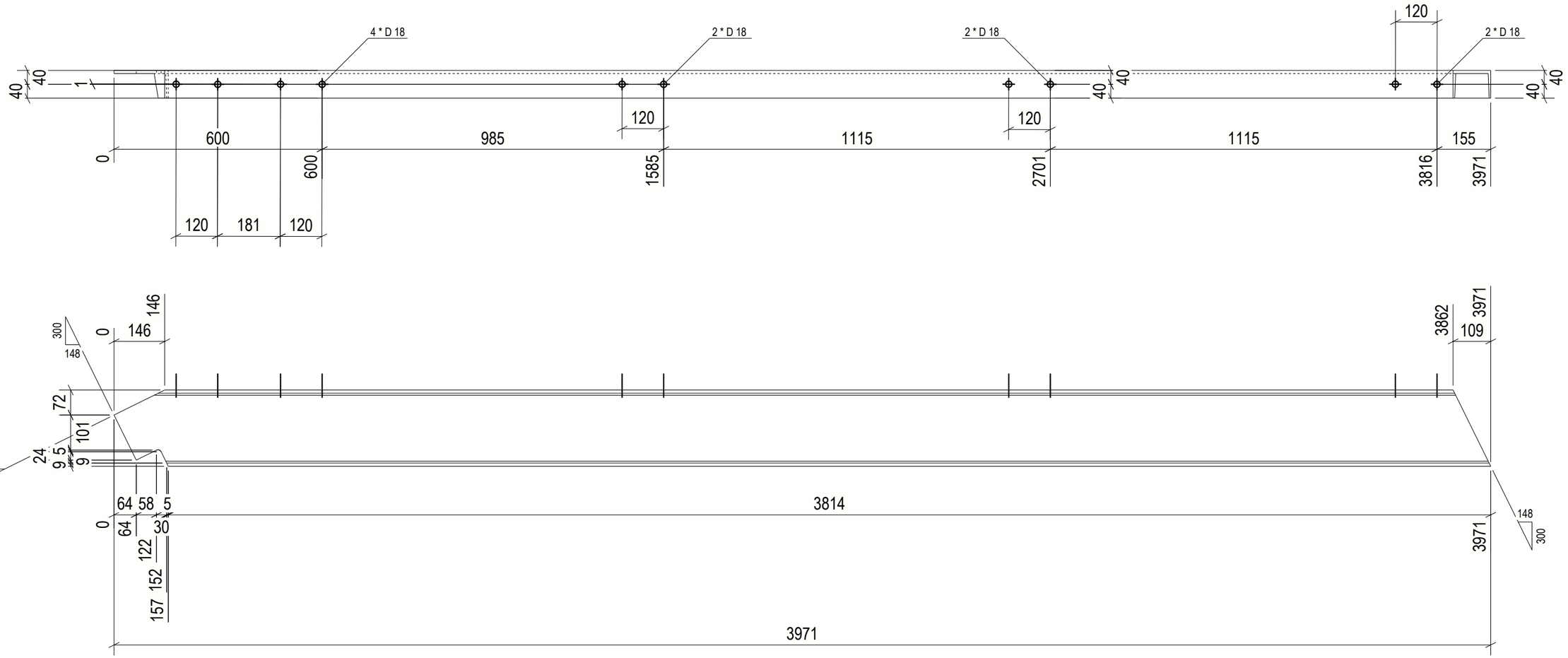

1 REQ'D AS DRAWN MK'D Z8-ST005

6 October Monorail Engineering Unit
Valid For Construction

GENERAL NOTES:

1. THE DIMENSIONS SHOWN ARE NOMINAL (IN MILLIMETERS), U.N.O.
2. WELD SIZESHALL BE AISC MINIMUM OF 6 mm UNLESS NOTED OTHERWISE.
3. ALL FIELD WELDS SHALL BE INSPECTED PER QUALITY ASSURANCE AND SPECIAL INSPECTIONS.

REFERENCE DRAWINGS

1	93M-BOA-NAT-LOT-04833
2	93M-BOA-NAT-LOT-09170
3	93M-BOA-NAT-LOT-01976
4	93M-BOA-NAT-LOT-20021
5	
6	
7	
8	
9	

6TH OF OCTOBER CITY RAIL TRANSIT MONORAIL

The Authority | Hill International Consultant | ORASCOM BOMBARDIER Main Contractor | INNOVA Structural Designer

KEY PLAN:

SCALE	SHOP DRAWING	DATE
AS SHOWN		12/05/2023

REV	DATE	DSG	CHK	APP	AMENDMENTS	STATUS
B	12/05/2023	M.KH	M.KH	DR.M.M	ISSUED FOR INFORMATION	IFI
	11/04/2022					

DRAWING TITLE

6TH OF OCTOBER MONORAIL SERVICE WALKWAYS ZONE (1008)
Z8-ST005

Project Code	Rubric	Initiator	Lot	Ref	Number	Revision
93M	0476	ACC	60DEP	DWG	08376	B

Tekla structures

All holes are 22mm U.N.O Length & Area & Weight per piece						
Z8-ST004	UPN220	S235JR	1	3974.3	2.86	116.7
Mark	Profile	Grade	QTY	Length	Area	Weight

approval is subject to approval of coordination package between multi-discipline

REVIEWED WITH COMMENT MONORAILS PROJECT

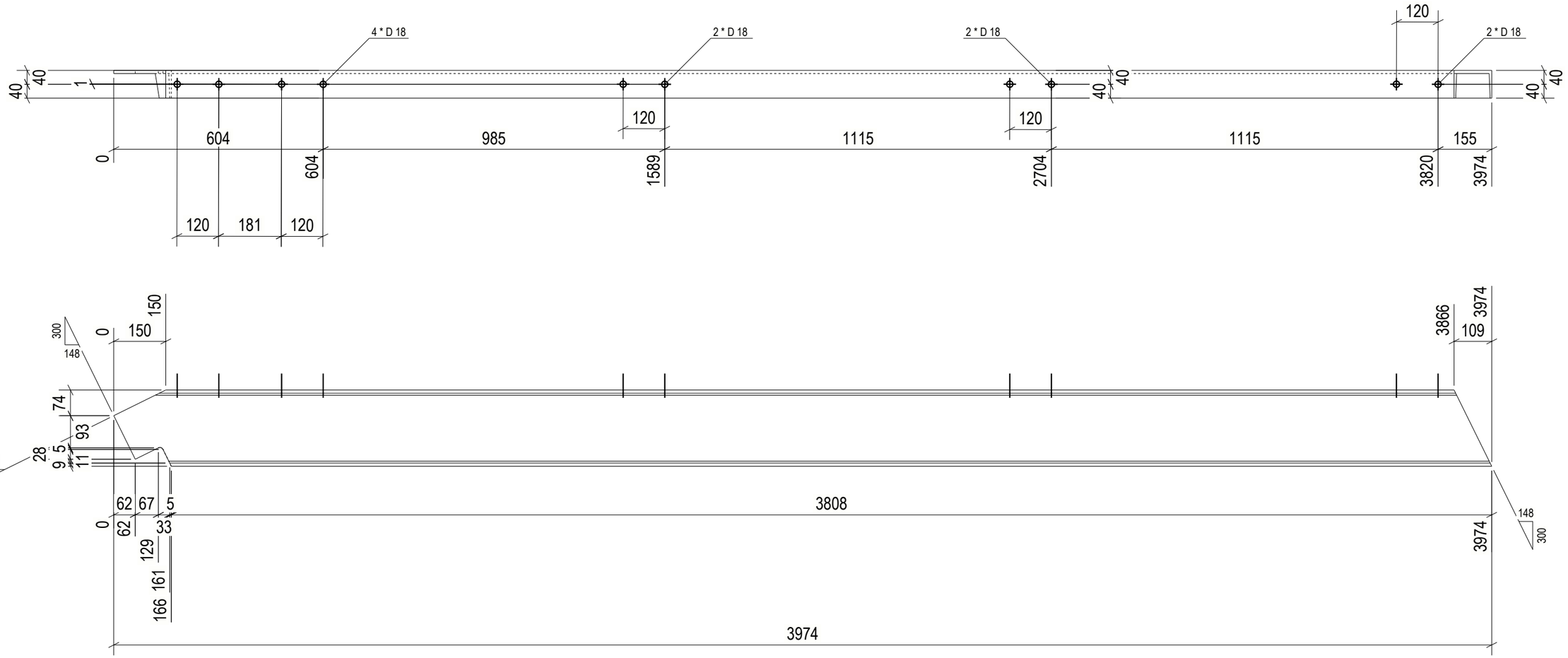

1 REQ'D AS DRAWN MK'D Z8-ST004

6 October Monorail Engineering Unit
Valid For Construction

GENERAL NOTES:

1. THE DIMENSIONS SHOWN ARE NOMINAL (IN MILLIMETERS), U.N.O.
2. WELD SIZESHALL BE AISC MINIMUM OF 6 mm UNLESS NOTED OTHERWISE.
3. ALL FIELD WELDS SHALL BE INSPECTED PER QUALITY ASSURANCE AND SPECIAL INSPECTIONS.

REFERENCE DRAWINGS

1	93M-BOA-NAT-LOT-04833
2	93M-BOA-NAT-LOT-09170
3	93M-BOA-NAT-LOT-01976
4	93M-BOA-NAT-LOT-20021
5	
6	
7	
8	
9	

6TH OF OCTOBER CITY RAIL TRANSIT MONORAIL

The Authority | Hill International Consultant | ORASCOM BOMBARDIER Main Contractor | INNOVA Structural Designer

KEY PLAN:

SCALE	SHOP DRAWING	DATE
AS SHOWN		12/05/2023

REV	DATE	DSG	CHK	APP	AMENDMENTS	STATUS
B	12/05/2023	M.KH	M.KH	DR.M.M	ISSUED FOR INFORMATION	IFI

DRAWING TITLE

6TH OF OCTOBER MONORAIL SERVICE WALKWAYS ZONE (1008)
Z8-ST004

Project Code	Rubric	Initiator	Lot	Ref	Number	Revision
93M	0476	ACC	60DEP	DWG	08377	B

Tekla structures

All holes are 22mm U.N.O Length & Area & Weight per piece						
Z8-ST003	UPN220	S235JR	1	3974.5	2.86	116.7
Mark	Profile	Grade	QTY	Length	Area	Weight

approval is subject to approval of coordination package between multi-discipline

REVIEWED WITH COMMENT MONORAILS PROJECT

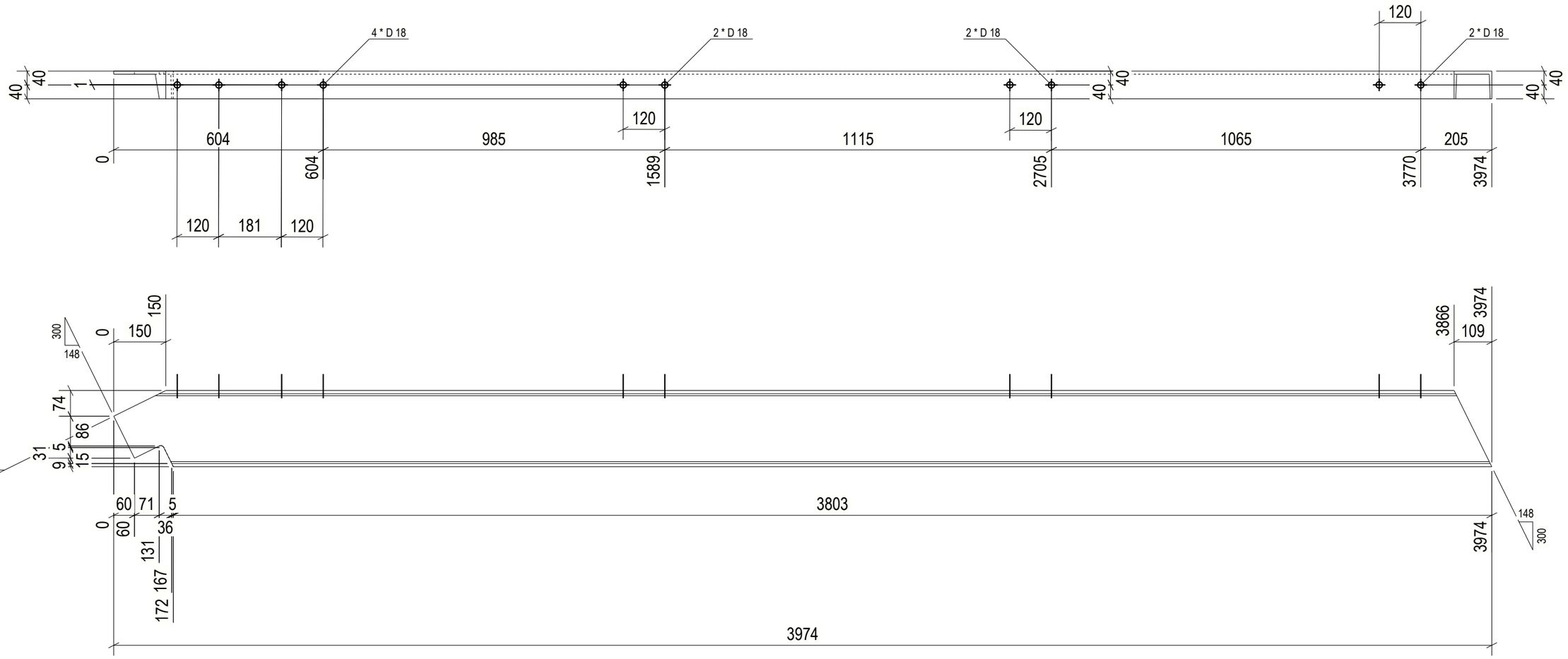

1 REQ'D AS DRAWN MK'D Z8-ST003

6 October Monorail Engineering Unit
Valid For Construction

GENERAL NOTES:

1. THE DIMENSIONS SHOWN ARE NOMINAL (IN MILLIMETERS), U.N.O.
2. WELD SIZESHALL BE AISC MINIMUM OF 6 mm UNLESS NOTED OTHERWISE.
3. ALL FIELD WELDS SHALL BE INSPECTED PER QUALITY ASSURANCE AND SPECIAL INSPECTIONS.

REFERENCE DRAWINGS

1	93M-BOA-NAT-LOT-04833
2	93M-BOA-NAT-LOT-09170
3	93M-BOA-NAT-LOT-01976
4	93M-BOA-NAT-LOT-20021
5	
6	
7	
8	
9	

6TH OF OCTOBER CITY RAIL TRANSIT MONORAIL

The Authority | Hill International Consultant | ORASCOM BOMBARDIER Main Contractor | INNOVA Structural Designer

KEY PLAN:

SCALE	SHOP DRAWING	DATE
AS SHOWN		12/05/2023

REV	DATE	DSG	CHK	APP	AMENDMENTS	STATUS
B	12/05/2023	M.KH	M.KH	DR.M.M	ISSUED FOR INFORMATION	IFI

DRAWING TITLE

6TH OF OCTOBER MONORAIL SERVICE WALKWAYS ZONE (1008)
Z8-ST003

Project Code	Rubric	Initiator	Lot	Ref	Number	Revision
93M	0476	ACC	60DEP	DWG	08378	B

Tekla structures

approval is subject to approval of coordination package between multi-discipline

REVIEWED WITH COMMENT MONORAILS PROJECT

All holes are 22mm U.N.O Length & Area & Weight per piece						
Z8-ST002	UPN220	S235JR	1	4045.4	2.91	118.8
Mark	Profile	Grade	QTY	Length	Area	Weight

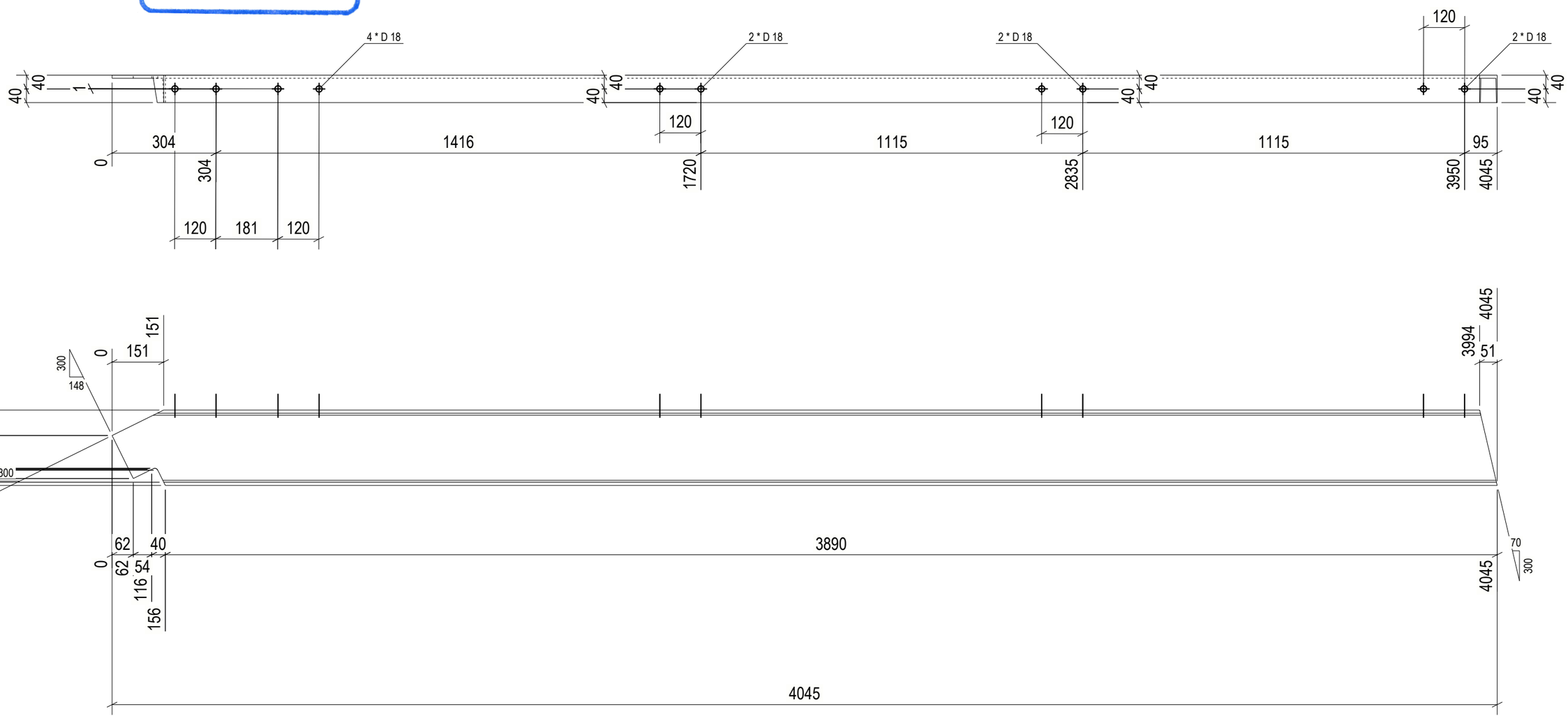

1 REQ'D AS DRAWN MK'D Z8-ST002

6 October Monorail Engineering Unit
Valid For Construction

GENERAL NOTES:

1. THE DIMENSIONS SHOWN ARE NOMINAL (IN MILLIMETERS), U.N.O.
2. WELD SIZESHALL BE AISC MINIMUM OF 6 mm UNLESS NOTED OTHERWISE.
3. ALL FIELD WELDS SHALL BE INSPECTED PER QUALITY ASSURANCE AND SPECIAL INSPECTIONS.

REFERENCE DRAWINGS

1	93M-BOA-NAT-LOT-04833
2	93M-BOA-NAT-LOT-09170
3	93M-BOA-NAT-LOT-01976
4	93M-BOA-NAT-LOT-20021
5	
6	
7	
8	
9	

6TH OF OCTOBER CITY RAIL TRANSIT MONORAIL

The Authority | Hill International Consultant | ORASCOM BOMBARDIER Main Contractor | INNOVA Structural Designer

KEY PLAN:

SCALE	SHOP DRAWING	DATE
AS SHOWN		12/05/2023

REV	DATE	DSG	CHK	APP	AMENDMENTS	STATUS
B	12/05/2023	M.KH	M.KH	DR.M.M	ISSUED FOR INFORMATION	IFI

DRAWING TITLE

6TH OF OCTOBER MONORAIL SERVICE WALKWAYS ZONE (1008)
Z8-ST002

Project Code	Rubric	Initiator	Lot	Ref	Number	Revision
93M	0476	ACC	60DEP	DWG	08379	B

Tekla structures

approval is subject to approval of coordination package between multi-discipline

REVIEWED WITH COMMENT
MONORAILS PROJECT

All holes are 22mm U.N.O Length & Area & Weight per piece

Mark	Profile	Grade	QTY	Length	Area	Weight
Z8-ST001	UPN220	S235JR	1	4035.9	2.91	118.5

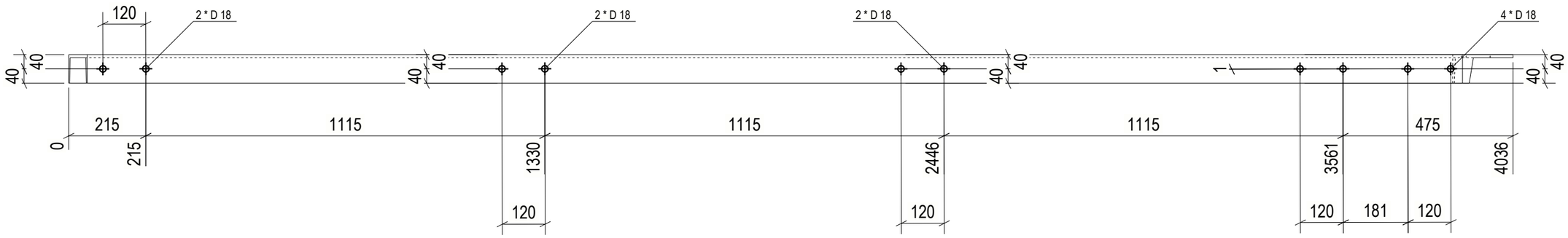

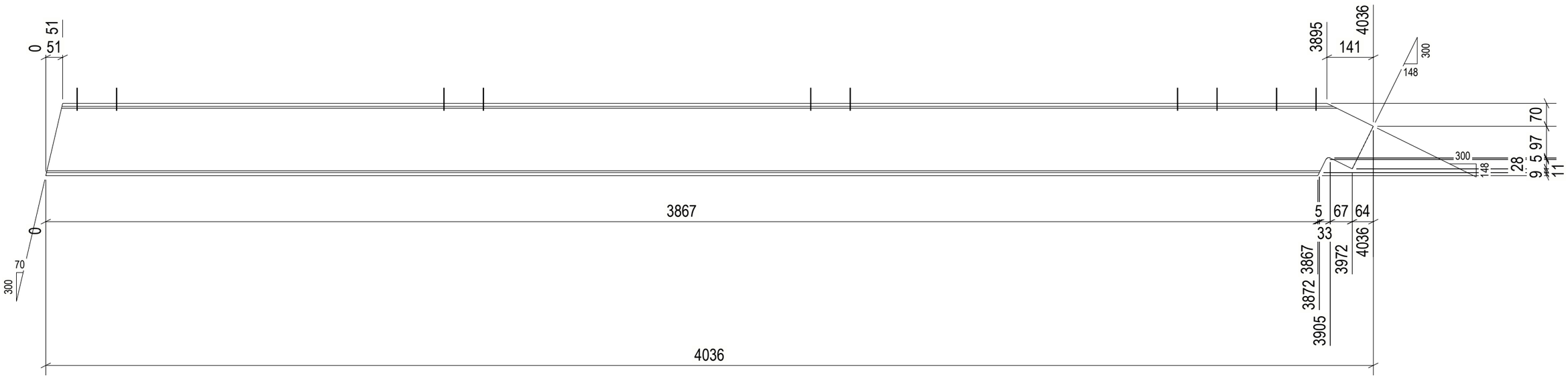

1 REQ'D AS DRAWN MK'D Z8-ST001

6 October Monorail
Engineering Unit
Valid For Construction

GENERAL NOTES:

1. THE DIMENSIONS SHOWN ARE NOMINAL (IN MILLIMETERS), U.N.O.
2. WELD SIZESHALL BE AISC MINIMUM OF 6 mm UNLESS NOTED OTHERWISE.
3. ALL FIELD WELDS SHALL BE INSPECTED PER QUALITY ASSURANCE AND SPECIAL INSPECTIONS.

REFERENCE DRAWINGS

1	93M-BOA-NAT-LOT-04833
2	93M-BOA-NAT-LOT-09170
3	93M-BOA-NAT-LOT-01976
4	93M-BOA-NAT-LOT-20021
5	
6	
7	
8	
9	

6TH OF OCTOBER CITY RAIL TRANSIT MONORAIL

The Authority | Hill International Consultant | Main Contractor | Structural Designer

KEY PLAN:

REV	DATE	DRN	CHK	APP	AMENDMENT DESCRIPTION	STATUS
B	12/05/2023	M.KH	M.KH	DR.M.M	ISSUED FOR INFORMATION	IFI

SCALE: AS SHOWN | SHOP DRAWING | DATE: 12/05/2023

DRAWING TITLE
6TH OF OCTOBER MONORAIL
SERVICE WALKWAYS
ZONE (1008)
Z8-ST001

Project Code	Rubric	Initiator	Lot	Ref	Number	Revision
9 3	M 0 4 7 6	A C C	6 0 D E P	D W G	0 8 3 8 0	B

Tekla structures

approval is subject to approval of coordination package between multi-discipline

REVIEWED WITH COMMENT
MONORAILS PROJECT

All holes are 22mm U.N.O Length & Area & Weight per piece						
Z8-PO011	L70*7	S235JR	1	1180.0	0.33	8.6
Mark	Profile	Grade	QTY	Length	Area	Weight

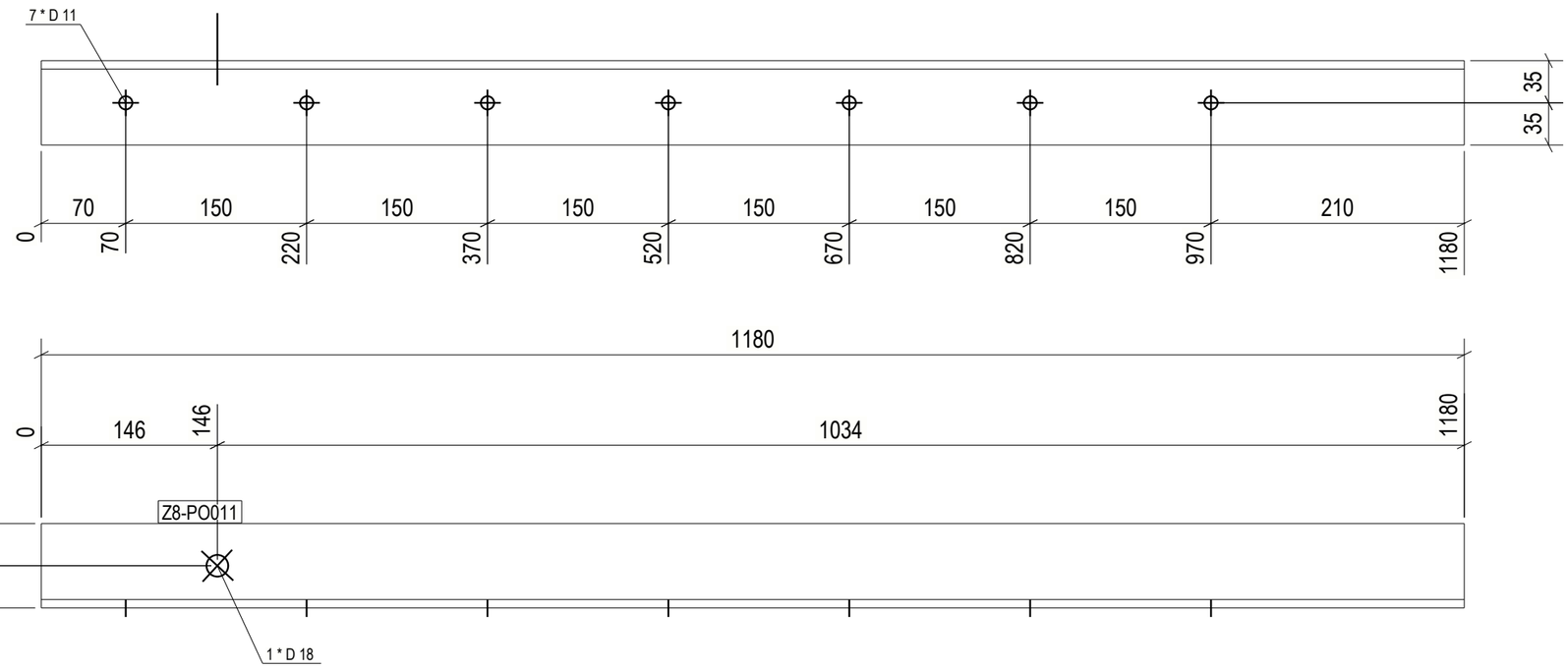

1 REQ'D AS DRAWN MK'D Z8-PO011

6 October Monorail
Engineering Unit
Valid For Construction

GENERAL NOTES:

1. THE DIMENSIONS SHOWN ARE NOMINAL (IN MILLIMETERS), U.N.O.
2. WELD SIZESHALL BE AISC MINIMUM OF 6 mm UNLESS NOTED OTHERWISE.
3. ALL FIELD WELDS SHALL BE INSPECTED PER QUALITY ASSURANCE AND SPECIAL INSPECTIONS.

REFERENCE DRAWINGS

1	93M-BOA-NAT-LOT-04833
2	93M-BOA-NAT-LOT-09170
3	93M-BOA-NAT-LOT-01976
4	93M-BOA-NAT-LOT-20021
5	
6	
7	
8	
9	

6TH OF OCTOBER CITY RAIL TRANSIT MONORAIL

The Authority | Hill International Consultant | Main Contractor | Structural Designer

KEY PLAN:

SCALE: AS SHOWN | SHOP DRAWING | DATE: 12/05/2023

REV	DATE	DSN	CHK	APP	AMENDMENT DESCRIPTION	STATUS
B	12/05/2023	M.KH	M.KH	DR.M.M	ISSUED FOR INFORMATION	IFI

DRAWING TITLE

6TH OF OCTOBER MONORAIL SERVICE WALKWAYS ZONE (1008)
Z8-PO011

Project Code	Rubric	Initiator	Lot	Ref	Number	Revision
9 3 M	0 4 7 6	A C C	6 0 D E P	D W G	0 8 3 8 1	B

Tekla structures

approval is subject to approval of coordination package between multi-discipline

REVIEWED WITH COMMENT
MONORAILS PROJECT

All holes are 22mm U.N.O Length & Area & Weight per piece

Mark	Profile	Grade	QTY	Length	Area	Weight
Z8-PO010	L70*7	S235JR	1	1180.0	0.33	8.6

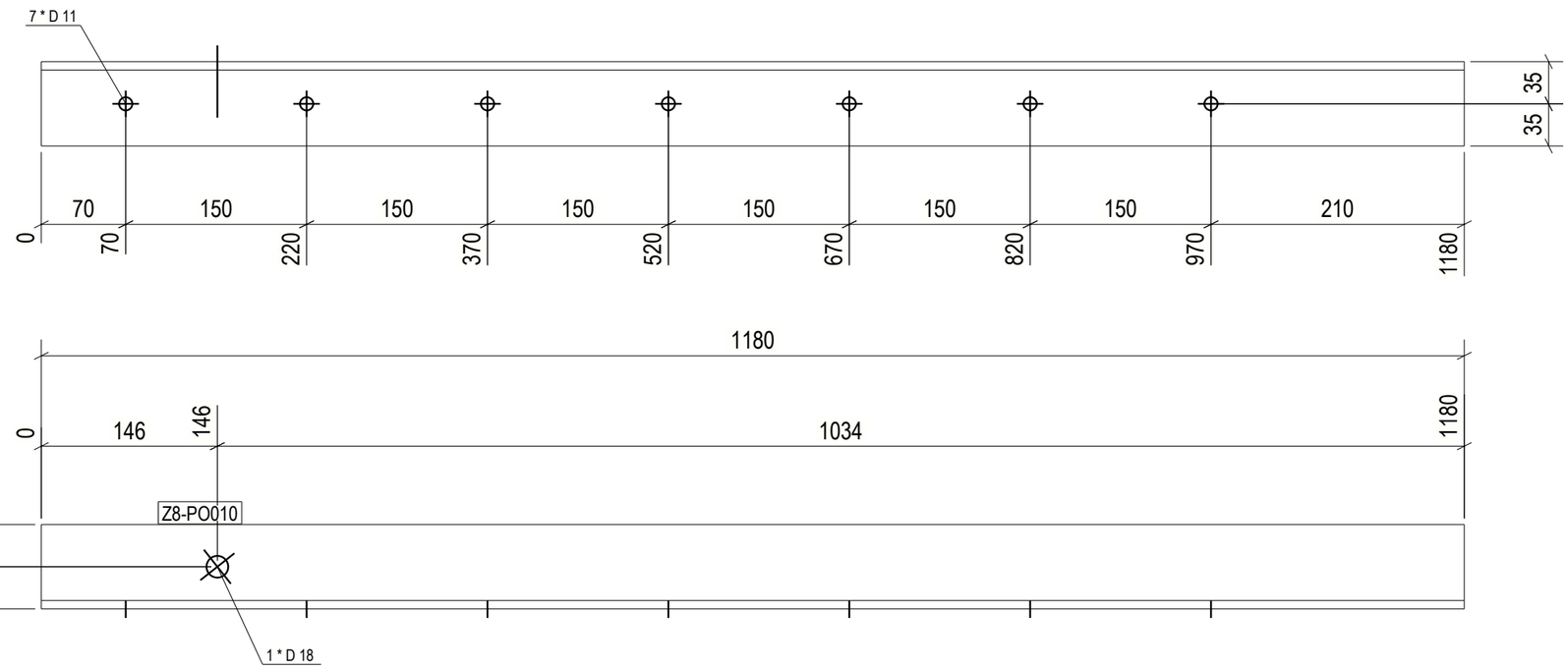

1 REQ'D AS DRAWN MK'D Z8-PO010

GENERAL NOTES:

1. THE DIMENSIONS SHOWN ARE NOMINAL (IN MILLIMETERS), U.N.O.
2. WELD SIZESHALL BE AISC MINIMUM OF 6 mm UNLESS NOTED OTHERWISE.
3. ALL FIELD WELDS SHALL BE INSPECTED PER QUALITY ASSURANCE AND SPECIAL INSPECTIONS.

REFERENCE DRAWINGS

1	93M-BOA-NAT-LOT-04833
2	93M-BOA-NAT-LOT-09170
3	93M-BOA-NAT-LOT-01976
4	93M-BOA-NAT-LOT-20021
5	
6	
7	
8	
9	

6TH OF OCTOBER CITY RAIL TRANSIT MONORAIL

The Authority | Hill International Consultant | Main Contractor | Structural Designer

KEY PLAN:

6 October Monorail
Engineering Unit
Valid For Construction

SCALE	SHOP DRAWING	DATE
AS SHOWN		12/05/2023

REV	DATE	DWN	CHK	APP	AMENDMENT DESCRIPTION	STATUS
B	12/05/2023	M.KH	M.KH	DR.M.M	ISSUED FOR INFORMATION	IFI

DRAWING TITLE

6TH OF OCTOBER MONORAIL
SERVICE WALKWAYS
ZONE (1008)
Z8-PO010

Project Code	Rubric	Initiator	Lot	Ref	Number	Revision
93	M047	ACC	60DEP	DWG	0838	B

Tekla structures

approval is subject to approval of coordination package between multi-discipline

REVIEWED WITH COMMENT
MONORAILS PROJECT

All holes are 22mm U.N.O Length & Area & Weight per piece

Mark	Profile	Grade	QTY	Length	Area	Weight
Z8-PO009	L70*7	S235JR	1	1180.0	0.33	8.6

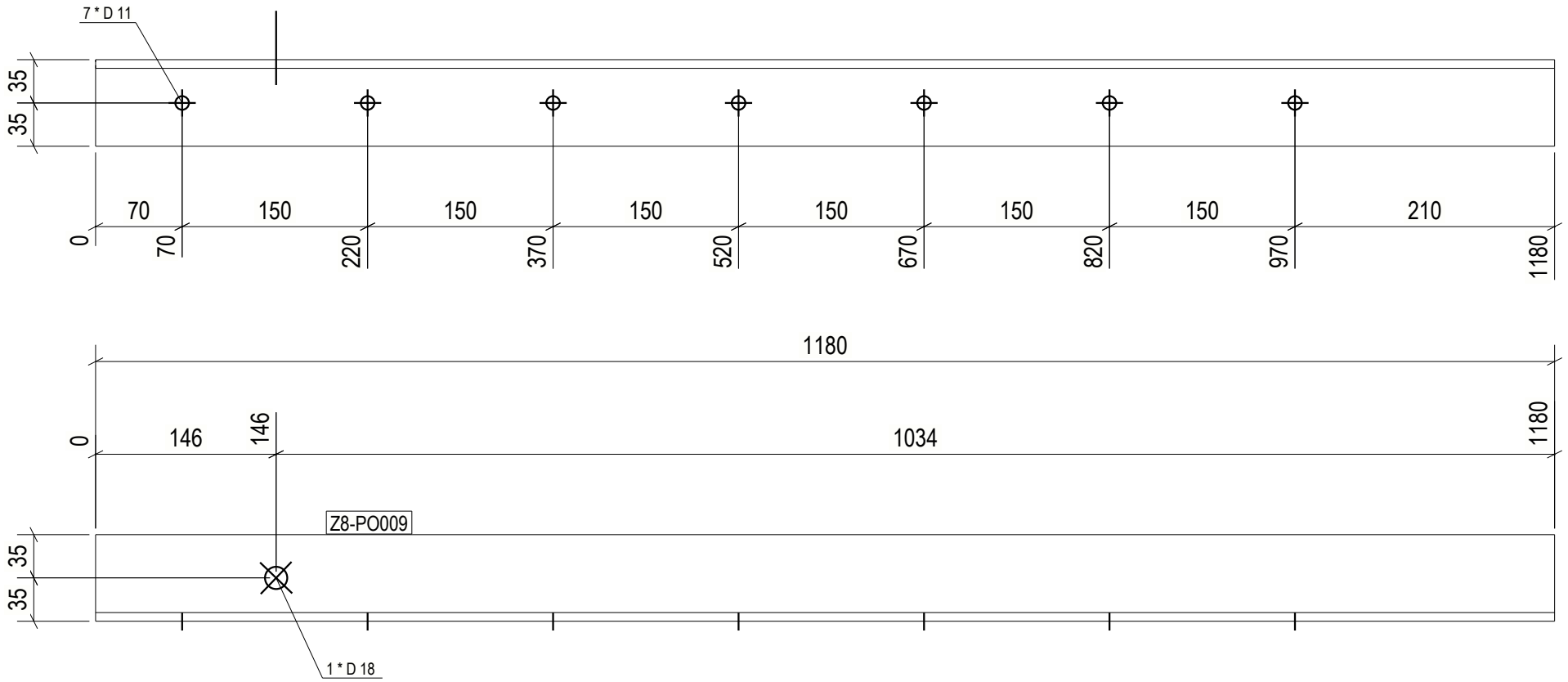

1 REQ'D AS DRAWN MK'D Z8-PO009

6 October Monorail
Engineering Unit
Valid For Construction

GENERAL NOTES:

1. THE DIMENSIONS SHOWN ARE NOMINAL (IN MILLIMETERS), U.N.O.
2. WELD SIZESHALL BE AISC MINIMUM OF 6 mm UNLESS NOTED OTHERWISE.
3. ALL FIELD WELDS SHALL BE INSPECTED PER QUALITY ASSURANCE AND SPECIAL INSPECTIONS.

REFERENCE DRAWINGS

1	93M-BOA-NAT-LOT-04833
2	93M-BOA-NAT-LOT-09170
3	93M-BOA-NAT-LOT-01976
4	93M-BOA-NAT-LOT-20021
5	
6	
7	
8	
9	

6TH OF OCTOBER CITY RAIL TRANSIT MONORAIL

The Authority | Hill International Consultant | Main Contractor | Structural Designer

KEY PLAN:

REV.	DATE	DSG	CHK	APP	AMENDMENTS	STATUS
B	12/05/2023	M.KH	M.KH	DR.M.M	ISSUED FOR INFORMATION	IFI
A	11/20/2022	M.KH	M.KH	DR.M.M	ISSUED FOR INFORMATION	IFI

SCALE: AS SHOWN | SHOP DRAWING | DATE: 12/05/2023

DRAWING TITLE
6TH OF OCTOBER MONORAIL
SERVICE WALKWAYS
ZONE (1008)
Z8-PO009

Project Code	Rubric	Initiator	Lot	Ref	Number	Revision
9 3 M	0 4 7 6	A C C	6 0 D E P	D W G	0 8 3 8 3	B

Tekla structures

approval is subject to approval of coordination package between multi-discipline

REVIEWED WITH COMMENT
MONORAILS PROJECT

All holes are 22mm U.N.O Length & Area & Weight per piece

Mark	Profile	Grade	QTY	Length	Area	Weight
Z8-PO008	L70*7	S235JR	4	1180.0	0.33	8.6

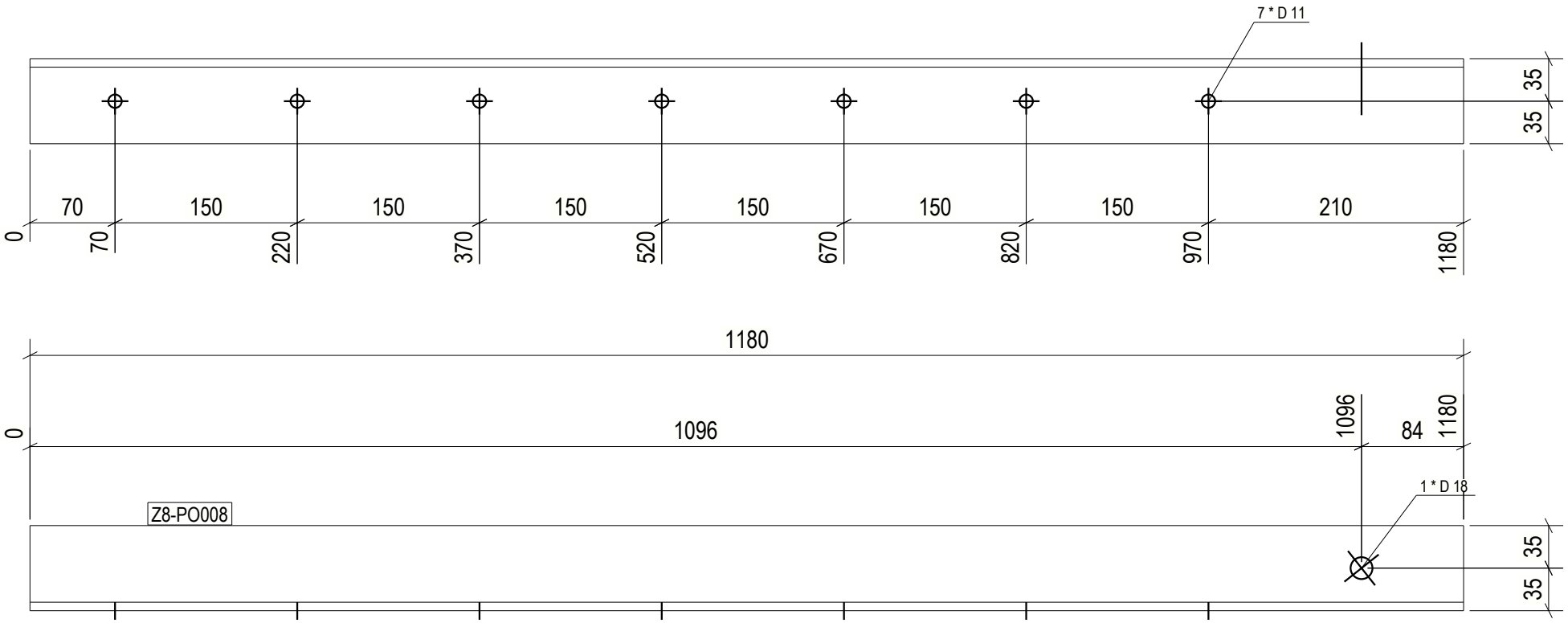

4 REQ'D AS DRAWN MK'D Z8-PO008

6 October Monorail
Engineering Unit
Valid For Construction

GENERAL NOTES:

1. THE DIMENSIONS SHOWN ARE NOMINAL (IN MILLIMETERS), U.N.O.
2. WELD SIZESHALL BE AISC MINIMUM OF 6 mm UNLESS NOTED OTHERWISE.
3. ALL FIELD WELDS SHALL BE INSPECTED PER QUALITY ASSURANCE AND SPECIAL INSPECTIONS.

REFERENCE DRAWINGS

1	93M-BOA-NAT-LOT-04833
2	93M-BOA-NAT-LOT-09170
3	93M-BOA-NAT-LOT-01976
4	93M-BOA-NAT-LOT-20021
5	
6	
7	
8	
9	

6TH OF OCTOBER CITY RAIL TRANSIT MONORAIL

The Authority — Hill International Consultant — Main Contractor — Structural Designer

KEY PLAN:

SCALE: AS SHOWN | SHOPDRAWING | DATE: 12/09/2023

REV.	DATE	DSG	CHK	APP	AMENDMENTS	STATUS
B	12/05/2023	M.KH	M.KH	DR.M.M	ISSUED FOR INFORMATION	IFI
A	11/20/2022	M.KH	M.KH	DR.M.M	ISSUED FOR INFORMATION	IFI

DRAWING TITLE

6TH OF OCTOBER MONORAIL
SERVICE WALKWAYS
ZONE (1008)
Z8-PO008

Project Code	Rubric	Initiator	Lot	Ref	Number	Revision
9 3 M	0 4 7 6	A C C	6 0 D	E P	D W G	0 8 3 8 4	B

Tekla structures

approval is subject to approval of coordination package between multi-discipline

REVIEWED WITH COMMENT
MONORAILS PROJECT

All holes are 22mm U.N.O Length & Area & Weight per piece

Mark	Profile	Grade	QTY	Length	Area	Weight
Z8-PO007	L70*7	S235JR	2	1180.0	0.33	8.6

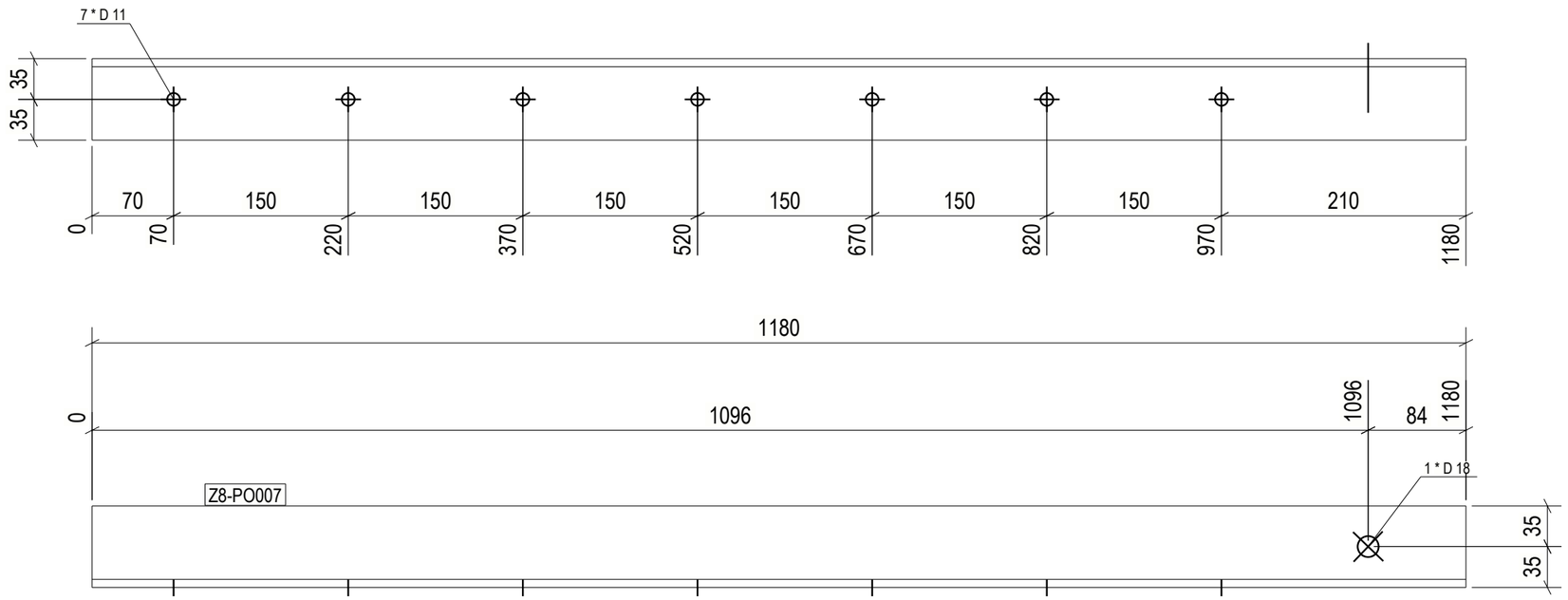

2 REQ'D AS DRAWN MK'D Z8-PO007

GENERAL NOTES:

1. THE DIMENSIONS SHOWN ARE NOMINAL (IN MILLIMETERS), U.N.O.
2. WELD SIZESHALL BE AISC MINIMUM OF 6 mm UNLESS NOTED OTHERWISE.
3. ALL FIELD WELDS SHALL BE INSPECTED PER QUALITY ASSURANCE AND SPECIAL INSPECTIONS.

REFERENCE DRAWINGS

1	93M-BOA-NAT-LOT-04833
2	93M-BOA-NAT-LOT-09170
3	93M-BOA-NAT-LOT-01976
4	93M-BOA-NAT-LOT-20021
5	
6	
7	
8	
9	

6TH OF OCTOBER CITY RAIL TRANSIT MONORAIL

The Authority | Consultant: Hill International | Main Contractor: ORASCOM CONSTRUCTION / BOMBARDIER | Structural Designer: INNOVA TRANSPORTATION

KEY PLAN:

SCALE: AS SHOWN

SHOP DRAWING

DATE: 12/05/2023

REV	DATE	DSN	CHK	APP	AMENDMENT DESCRIPTION	STATUS
B	12/05/2023	M.KH	M.KH	DR.M.M	ISSUED FOR INFORMATION	IFI

6 October Monorail
Engineering Unit
Valid For Construction

DRAWING TITLE

6TH OF OCTOBER MONORAIL SERVICE WALKWAYS ZONE (1008)
Z8-PO007

Project Code	Rubric	Initiator	Lot	Ref	Number	Revision
9 3 M	0 4 7 6	A C C	6 0 D E P	D W G	0 8 3 8 5	B

Tekla structures

approval is subject to approval of coordination package between multi-discipline

REVIEWED WITH COMMENT
MONORAILS PROJECT

All holes are 22mm U.N.O Length & Area & Weight per piece

Mark	Profile	Grade	QTY	Length	Area	Weight
Z8-PO006	L70*7	S235JR	1	1180.0	0.33	8.6

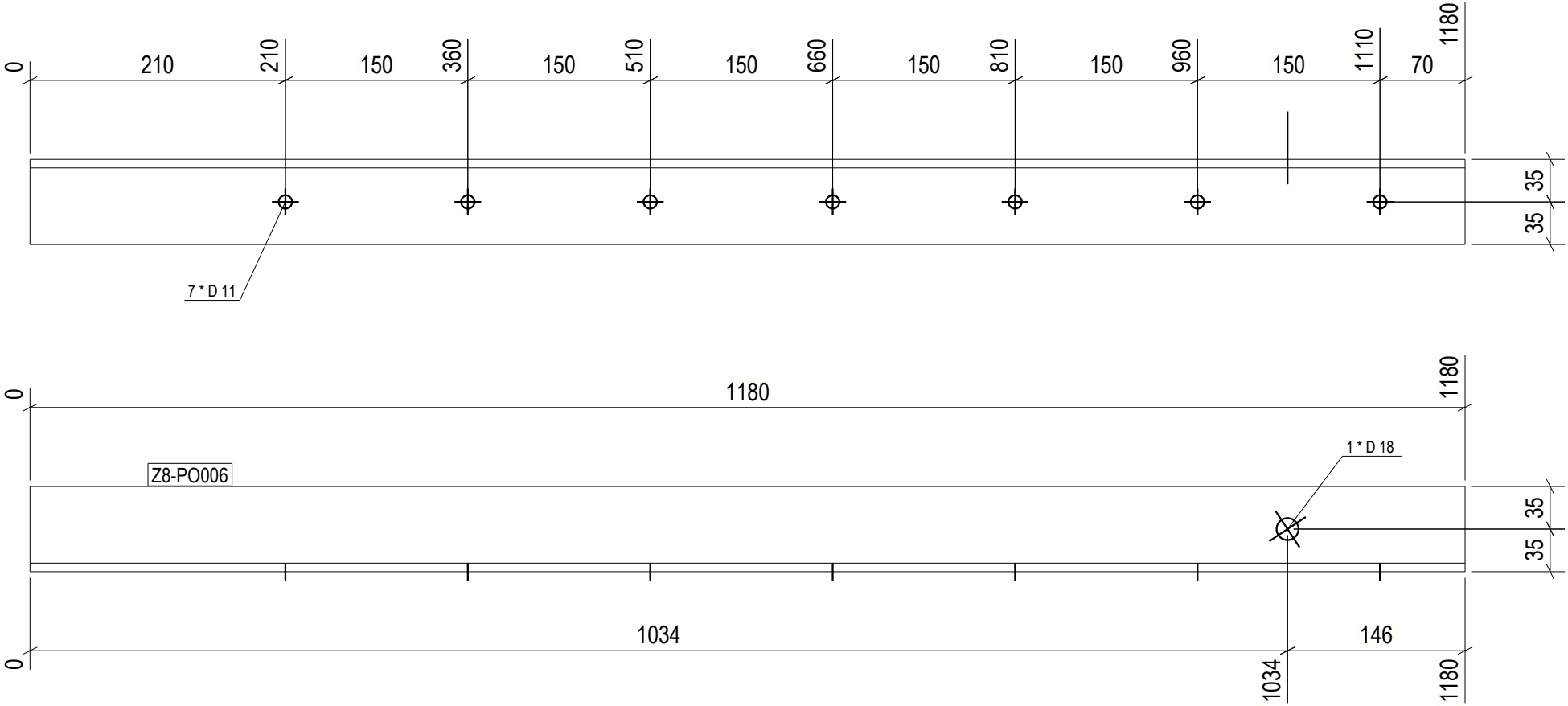

1 REQ'D AS DRAWN MK'D Z8-PO006

6 October Monorail
Engineering Unit
Valid For Construction

GENERAL NOTES:

1. THE DIMENSIONS SHOWN ARE NOMINAL (IN MILLIMETERS), U.N.O.
2. WELD SIZESHALL BE AISC MINIMUM OF 6 mm UNLESS NOTED OTHERWISE.
3. ALL FIELD WELDS SHALL BE INSPECTED PER QUALITY ASSURANCE AND SPECIAL INSPECTIONS.

REFERENCE DRAWINGS

1	93M-BOA-NAT-LOT-04833
2	93M-BOA-NAT-LOT-09170
3	93M-BOA-NAT-LOT-01976
4	93M-BOA-NAT-LOT-20021
5	
6	
7	
8	
9	

6TH OF OCTOBER CITY RAIL TRANSIT MONORAIL

The Authority — Hill International Consultant — Main Contractor — Structural Designer

KEY PLAN:

REV.	DATE	DSG	CHK	APP	AMENDMENTS	STATUS
B	12/05/2023	M.KH	M.KH	DR.BM	ISSUED FOR INFORMATION	IFI
A	11/20/2022	M.KH	M.KH	DR.BM	ISSUED FOR INFORMATION	IFI

SCALE: AS SHOWN | SHOPDRAWING | DATE: 12/05/2023

DRAWING TITLE
6TH OF OCTOBER MONORAIL
SERVICE WALKWAYS
ZONE (1008)
Z8-PO006

Project Code	Rubric	Initiator	Lot	Ref	Number	Revision
9 3 M	0 4 7 6	A C C	6 0 D E	P D W	G 0 8 3 8 6	B

Tekla structures

approval is subject to approval of coordination package between multi-discipline

REVIEWED WITH COMMENT MONORAILS PROJECT

All holes are 22mm U.N.O Length & Area & Weight per piece						
Z8-PO005	L70*7	S235JR	1	1180.0	0.33	8.6
Mark	Profile	Grade	QTY	Length	Area	Weight

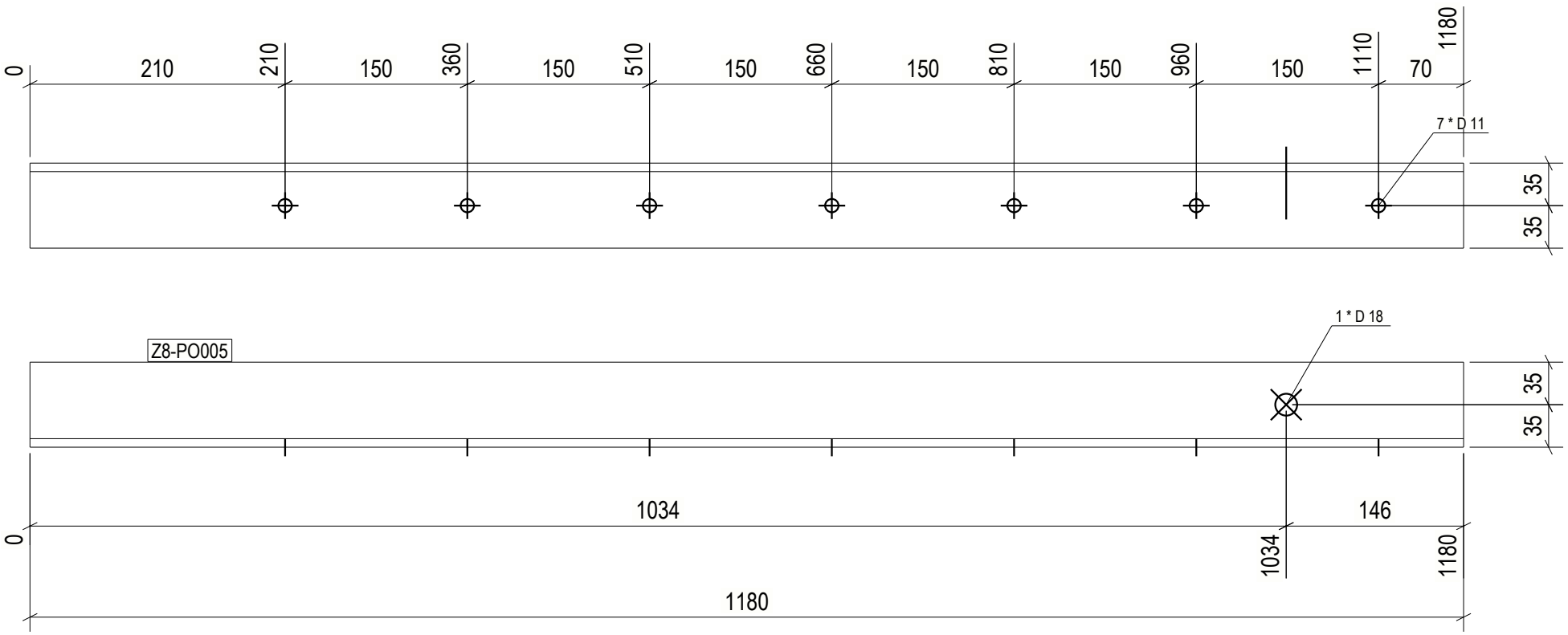

1 REQ'D AS DRAWN MK'D Z8-PO005

6 October Monorail Engineering Unit Valid For Construction

GENERAL NOTES:

1. THE DIMENSIONS SHOWN ARE NOMINAL (IN MILLIMETERS), U.N.O.
2. WELD SIZESHALL BE AISC MINIMUM OF 6 mm UNLESS NOTED OTHERWISE.
3. ALL FIELD WELDS SHALL BE INSPECTED PER QUALITY ASSURANCE AND SPECIAL INSPECTIONS.

REFERENCE DRAWINGS

1	93M-BOA-NAT-LOT-04833
2	93M-BOA-NAT-LOT-09170
3	93M-BOA-NAT-LOT-01976
4	93M-BOA-NAT-LOT-20021
5	
6	
7	
8	
9	

6TH OF OCTOBER CITY RAIL TRANSIT MONORAIL

The Authority — Hill International Consultant — Main Contractor — Structural Designer

KEY PLAN:

SCALE	SHOPDRAWING	DATE
AS SHOWN		12/05/2023

REV	DATE	DSG	CHK	APP	AMENDMENTS	STATUS
B	12/05/2023	M.KH	M.KH	DR.M.M	ISSUED FOR INFORMATION	IFI
A	11/20/2022	M.KH	M.KH	DR.M.M	ISSUED FOR INFORMATION	IFI

DRAWING TITLE

6TH OF OCTOBER MONORAIL SERVICE WALKWAYS ZONE (1008)
Z8-PO005

Project Code	Rubric	Initiator	Lot	Ref	Number	Revision
93	M0476	ACC	60DEP	DWG	08387	B

Tekla structures

approval is subject to approval of coordination package between multi-discipline

REVIEWED WITH COMMENT
MONORAILS PROJECT

All holes are 22mm U.N.O Length & Area & Weight per piece						
Z8-PO004	L70*7	S235JR	1	1180.0	0.33	8.6
Mark	Profile	Grade	QTY	Length	Area	Weight

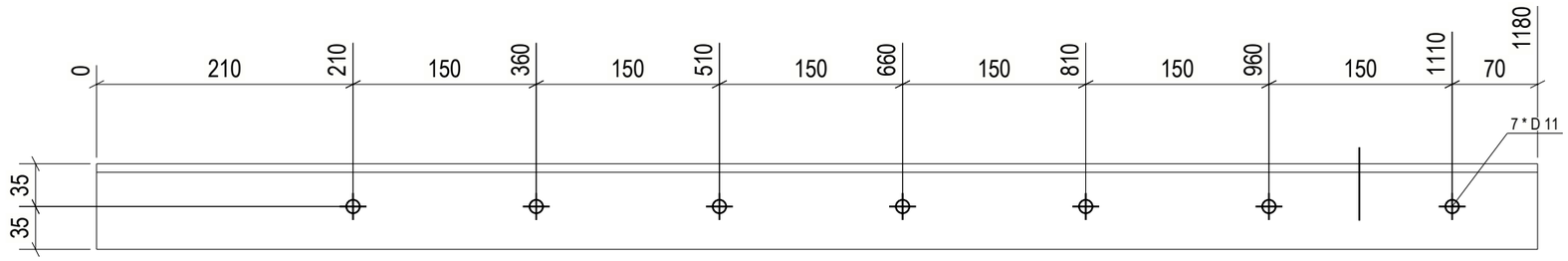

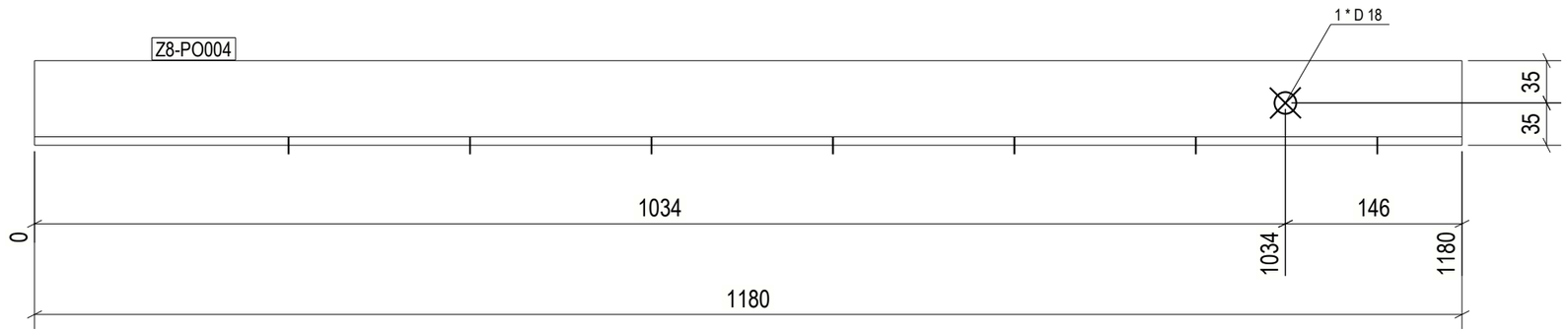

1 REQ'D AS DRAWN MK'D Z8-PO004

GENERAL NOTES:

1. THE DIMENSIONS SHOWN ARE NOMINAL (IN MILLIMETERS), U.N.O.
2. WELD SIZESHALL BE AISC MINIMUM OF 6 mm UNLESS NOTED OTHERWISE.
3. ALL FIELD WELDS SHALL BE INSPECTED PER QUALITY ASSURANCE AND SPECIAL INSPECTIONS.

REFERENCE DRAWINGS

1	93M-BOA-NAT-LOT-04833
2	93M-BOA-NAT-LOT-09170
3	93M-BOA-NAT-LOT-01976
4	93M-BOA-NAT-LOT-20021
5	
6	
7	
8	
9	

6TH OF OCTOBER CITY RAIL TRANSIT MONORAIL

The Authority | Hill International Consultant | Main Contractor | Structural Designer

KEY PLAN:

6 October Monorail Engineering Unit Valid For Construction

SCALE	SHOP DRAWING	DATE
AS SHOWN		12/05/2023

REV	DATE	DWN	CHK	APP	AMENDMENTS	STATUS
B	12/05/2023	M.KH	M.KH	DR.M.M	ISSUED FOR INFORMATION	IFI

DRAWING TITLE

6TH OF OCTOBER MONORAIL SERVICE WALKWAYS ZONE (1008)
Z8-PO004

Project Code	Rubric	Initiator	Lot	Ref	Number	Revision
9 3	M 0 4 7 6	A C C	6 0 D E P	D W G	0 8 3 8 8	B

Tekla structures

approval is subject to approval of coordination package between multi-discipline

REVIEWED WITH COMMENT
MONORAILS PROJECT

All holes are 22mm U.N.O Length & Area & Weight per piece

Mark	Profile	Grade	QTY	Length	Area	Weight
Z8-PO003	L70*7	S235JR	47	1180.0	0.33	8.6

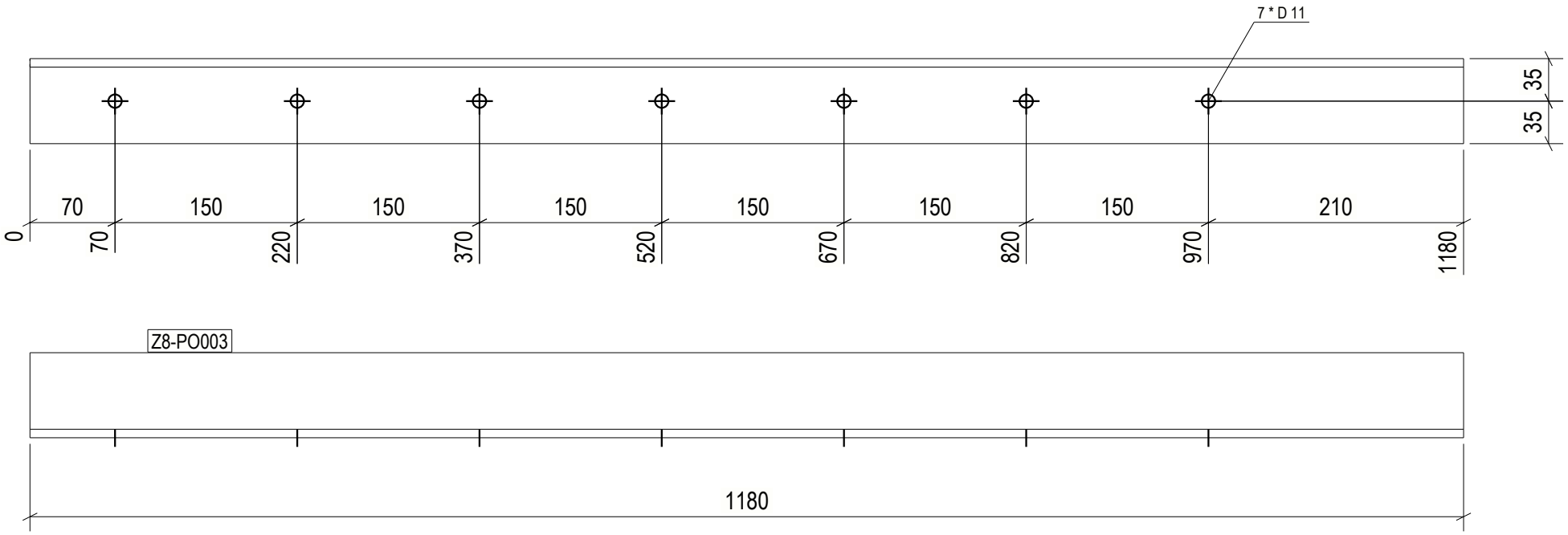

47 REQ'D AS DRAWN MK'D Z8-PO003

6 October Monorail
Engineering Unit
Valid For Construction

GENERAL NOTES:

1. THE DIMENSIONS SHOWN ARE NOMINAL (IN MILLIMETERS), U.N.O.
2. WELD SIZESHALL BE AISC MINIMUM OF 6 mm UNLESS NOTED OTHERWISE.
3. ALL FIELD WELDS SHALL BE INSPECTED PER QUALITY ASSURANCE AND SPECIAL INSPECTIONS.

REFERENCE DRAWINGS

1	93M-BOA-NAT-LOT-04833
2	93M-BOA-NAT-LOT-09170
3	93M-BOA-NAT-LOT-01976
4	93M-BOA-NAT-LOT-20021
5	
6	
7	
8	
9	

6TH OF OCTOBER CITY RAIL TRANSIT MONORAIL

The Authority — Hill International Consultant — Main Contractor — Structural Designer

KEY PLAN:

SCALE	SHOPDRAWING	DATE
AS SHOWN		12/09/2023

REV	DATE	DSG	CHK	APP	AMENDMENTS	STATUS
B	12/05/2023	M.KH	M.KH	DR.BM	ISSUED FOR INFORMATION	IFI
A	11/20/2022	M.KH	M.KH	DR.BM	ISSUED FOR INFORMATION	IFI

DRAWING TITLE

6TH OF OCTOBER MONORAIL SERVICE WALKWAYS ZONE (1008) Z8-PO003

Project Code	Rubric	Initiator	Lot	Ref	Number	Revision
9 3 M	0 4 7 6	A C C	6 0 D E	P D W	G 0 8	3 8 9 B

Tekla structures

approval is subject to approval of coordination package between multi-discipline

REVIEWED WITH COMMENT
MONORAILS PROJECT

All holes are 22mm U.N.O Length & Area & Weight per piece

Mark	Profile	Grade	QTY	Length	Area	Weight
Z8-PO002	L70*7	S235JR	14	1180.0	0.33	8.6

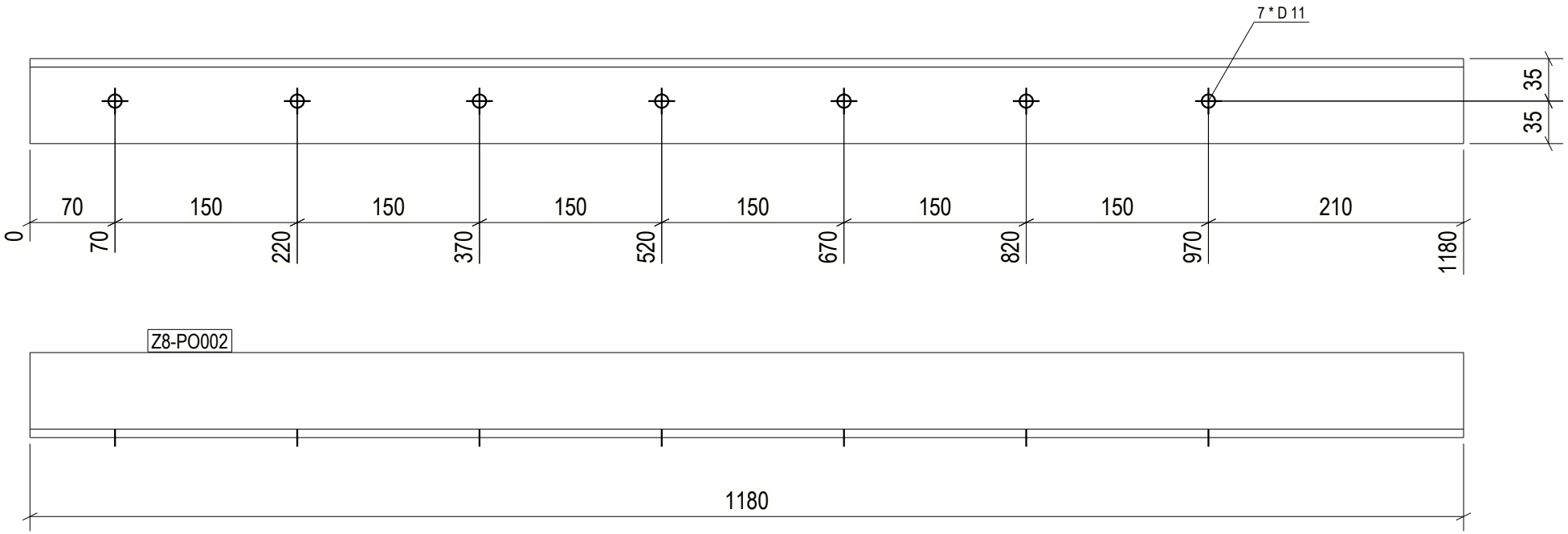

14 REQ'D AS DRAWN MK'D Z8-PO002

6 October Monorail
Engineering Unit
Valid For Construction

GENERAL NOTES:

1. THE DIMENSIONS SHOWN ARE NOMINAL (IN MILLIMETERS), U.N.O.
2. WELD SIZESHALL BE AISC MINIMUM OF 6 mm UNLESS NOTED OTHERWISE.
3. ALL FIELD WELDS SHALL BE INSPECTED PER QUALITY ASSURANCE AND SPECIAL INSPECTIONS.

REFERENCE DRAWINGS

1	93M-BOA-NAT-LOT-04833
2	93M-BOA-NAT-LOT-09170
3	93M-BOA-NAT-LOT-01976
4	93M-BOA-NAT-LOT-20021
5	
6	
7	
8	
9	

6TH OF OCTOBER CITY RAIL TRANSIT MONORAIL

The Authority — Hill International Consultant — Main Contractor — Structural Designer

KEY PLAN:

SCALE	SHOPDRAWING	DATE
AS SHOWN		12/09/2023

REV.	DATE	DSG	CHK	APP	AMENDMENTS	STATUS
B	12/05/2023	M.KH	M.KH	DR.BM	ISSUED FOR INFORMATION	IFI
A	11/20/2022	M.KH	M.KH	DR.BM	ISSUED FOR INFORMATION	IFI

DRAWING TITLE

6TH OF OCTOBER MONORAIL
SERVICE WALKWAYS
ZONE (1008)
Z8-PO002

Project Code	Rubric	Initiator	Lot	Ref	Number	Revision
93M	047	ACC	60DEP	DWG	0839	B

Tekla structures

approval is subject to approval of coordination package between multi-discipline

REVIEWED WITH COMMENT
MONORAILS PROJECT

All holes are 22mm U.N.O Length & Area & Weight per piece

Mark	Profile	Grade	QTY	Length	Area	Weight
Z8-PO001	L70*7	S235JR	29	1180.0	0.33	8.6

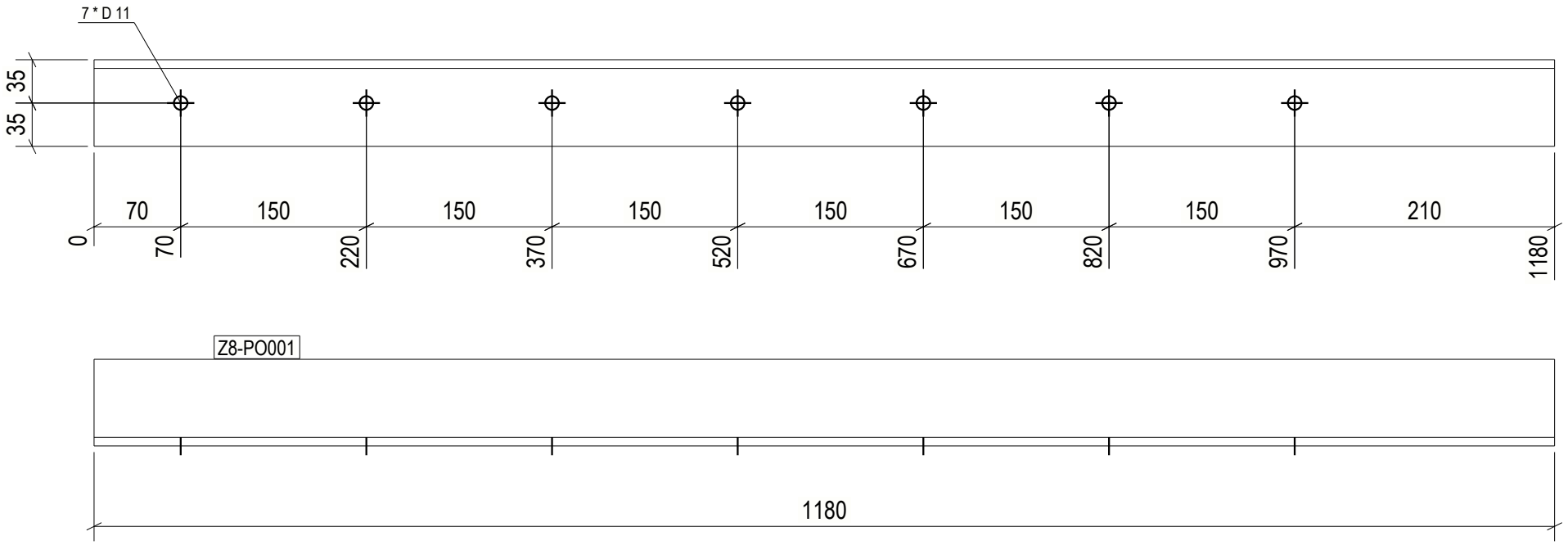

29 REQ'D AS DRAWN MK'D Z8-PO001

6 October Monorail
Engineering Unit
Valid For Construction

GENERAL NOTES:

1. THE DIMENSIONS SHOWN ARE NOMINAL (IN MILLIMETERS), U.N.O.
2. WELD SIZESHALL BE AISC MINIMUM OF 6 mm UNLESS NOTED OTHERWISE.
3. ALL FIELD WELDS SHALL BE INSPECTED PER QUALITY ASSURANCE AND SPECIAL INSPECTIONS.

REFERENCE DRAWINGS

1	93M-BOA-NAT-LOT-04833
2	93M-BOA-NAT-LOT-09170
3	93M-BOA-NAT-LOT-01976
4	93M-BOA-NAT-LOT-20021
5	
6	
7	
8	
9	

6TH OF OCTOBER CITY RAIL TRANSIT MONORAIL

The Authority | Hill International Consultant | Main Contractor | Structural Designer

KEY PLAN:

REV.	DATE	DSG	CHK	APP	AMENDMENTS	STATUS
B	12/05/2023	M.KH	M.KH	DR.BM	ISSUED FOR INFORMATION	IFI
A	11/20/2022	M.KH	M.KH	DR.BM	ISSUED FOR INFORMATION	IFI

SCALE: AS SHOWN | SHOPDRAWING | DATE: 12/05/2023

DRAWING TITLE
6TH OF OCTOBER MONORAIL
SERVICE WALKWAYS
ZONE (1008)
Z8-PO001

Project Code	Rubric	Initiator	Lot	Ref	Number	Revision
9 3 M	0 4 7 6	A C C	6 0 D E P	D W G	0 8 3 9 1	B

Tekla structures

approval is subject to approval of coordination package between multi-discipline

REVIEWED WITH COMMENT
MONORAILS PROJECT

All holes are 22mm U.N.O Length & Area & Weight per piece

Mark	Profile	Grade	QTY	Length	Area	Weight
Z8-LD001	L100*10	S235JR	1	3380.0	1.35	50.2

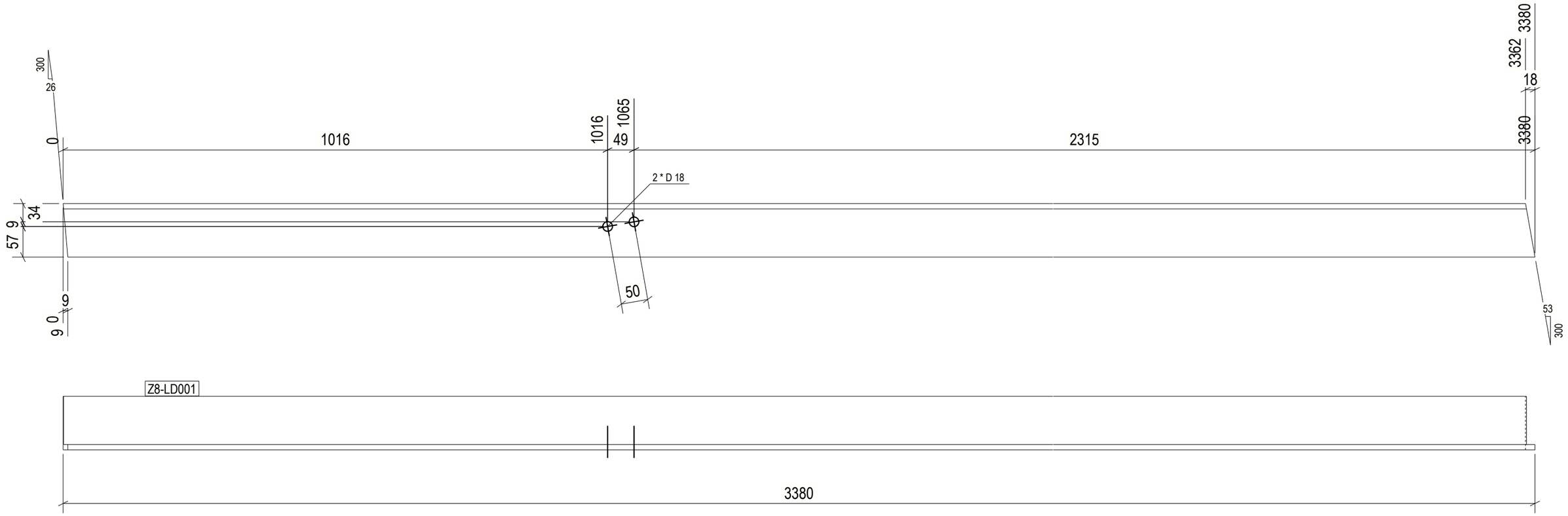

1 REQ'D AS DRAWN MK'D Z8-LD001

6 October Monorail
Engineering Unit
Valid For Construction

GENERAL NOTES:

1. THE DIMENSIONS SHOWN ARE NOMINAL (IN MILLIMETERS), U.N.O.
2. WELD SIZESHALL BE AISC MINIMUM OF 6 mm UNLESS NOTED OTHERWISE.
3. ALL FIELD WELDS SHALL BE INSPECTED PER QUALITY ASSURANCE AND SPECIAL INSPECTIONS.

REFERENCE DRAWINGS

1	93M-BOA-NAT-LOT-04833
2	93M-BOA-NAT-LOT-09170
3	93M-BOA-NAT-LOT-01976
4	93M-BOA-NAT-LOT-20021
5	
6	
7	
8	
9	

6TH OF OCTOBER CITY RAIL TRANSIT MONORAIL

The Authority — Hill International Consultant — Main Contractor — Structural Designer

KEY PLAN:

SCALE	SHOP DRAWING	DATE
AS SHOWN		12/05/2023

REV	DATE	DSN	CHK	APP	AMENDMENT DESCRIPTION	STATUS
B	12/05/2023	M.KH	M.KH	DR.M.M	ISSUED FOR INFORMATION	IFI

DRAWING TITLE

6TH OF OCTOBER MONORAIL
SERVICE WALKWAYS
ZONE (1008)
Z8-LD001

Project Code	Rubric	Initiator	Lot	Ref	Number	Revision
9 3 M	0 4 7 6	A C C	6 0 D E	P	D W G	0 8 3 9 2	B

Tekla structures

All holes are 22mm U.N.O Length & Area & Weight per piece						
Z8-HR109	CHS48.3*4.0	S235JR	1	2417.0	0.36	10.6
Mark	Profile	Grade	QTY	Length	Area	Weight

approval is subject to approval of coordination package between multi-discipline

REVIEWED WITH COMMENT MONORAILS PROJECT

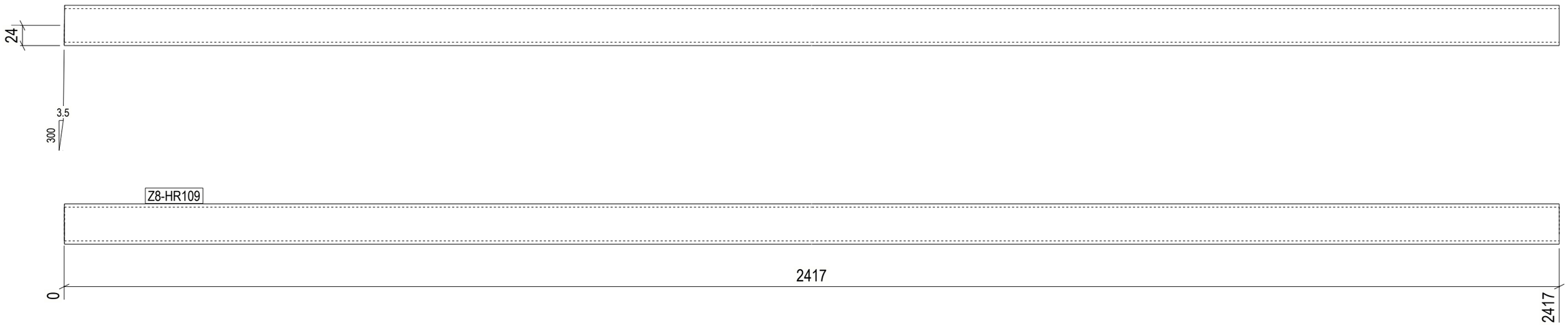

1 REQ'D AS DRAWN MK'D Z8-HR109

6 October Monorail Engineering Unit Valid For Construction

GENERAL NOTES:

1. THE DIMENSIONS SHOWN ARE NOMINAL (IN MILLIMETERS), U.N.O.
2. WELD SIZESHALL BE AISC MINIMUM OF 6 mm UNLESS NOTED OTHERWISE.
3. ALL FIELD WELDS SHALL BE INSPECTED PER QUALITY ASSURANCE AND SPECIAL INSPECTIONS.

REFERENCE DRAWINGS

1	93M-BOA-NAT-LOT-04833
2	93M-BOA-NAT-LOT-09170
3	93M-BOA-NAT-LOT-01976
4	93M-BOA-NAT-LOT-20021
5	
6	
7	
8	
9	

6TH OF OCTOBER CITY RAIL TRANSIT MONORAIL

The Authority | Hill International Consultant | ORASCOM BOMBARDIER Main Contractor | INNOVA Structural Designer

KEY PLAN:

SCALE	SHOP DRAWING	DATE
AS SHOWN		12/05/2023

REV	DATE	DSN	CHK	APP	AMENDMENTS	STATUS
B	12/05/2023	M.KH	M.KH	DR.M.M	ISSUED FOR INFORMATION	IFI
	11/04/2022					

DRAWING TITLE

6TH OF OCTOBER MONORAIL SERVICE WALKWAYS ZONE (1008)

Z8-HR109

Project Code	Rubric	Initiator	Lot	Ref	Number	Revision
93M	0476	ACC	60DEP	DWG	08393	B

Tekla structures

approval is subject to approval of coordination package between multi-discipline

REVIEWED WITH COMMENT
MONORAILS PROJECT

All holes are 22mm U.N.O Length & Area & Weight per piece

Mark	Profile	Grade	QTY	Length	Area	Weight
Z8-HR108	CHS48.3*4.0	S235JR	1	3145.0	0.47	13.8

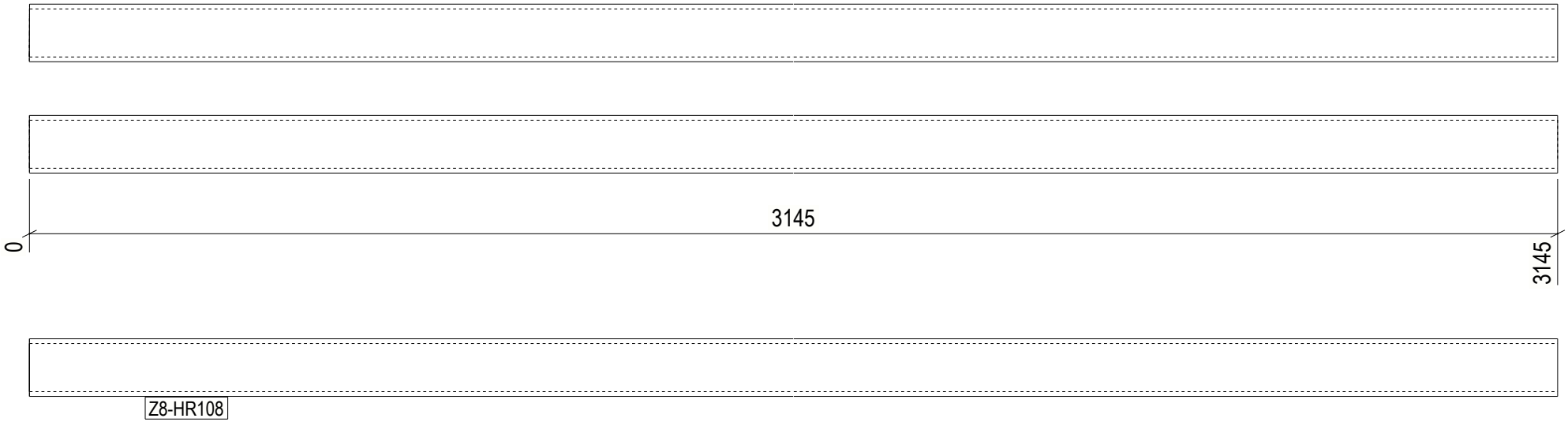

1 REQ'D AS DRAWN MK'D Z8-HR108

6 October Monorail
Engineering Unit
Valid For Construction

GENERAL NOTES:

1. THE DIMENSIONS SHOWN ARE NOMINAL (IN MILLIMETERS), U.N.O.
2. WELD SIZESHALL BE AISC MINIMUM OF 6 mm UNLESS NOTED OTHERWISE.
3. ALL FIELD WELDS SHALL BE INSPECTED PER QUALITY ASSURANCE AND SPECIAL INSPECTIONS.

REFERENCE DRAWINGS

1	93M-BOA-NAT-LOT-04833
2	93M-BOA-NAT-LOT-09170
3	93M-BOA-NAT-LOT-01976
4	93M-BOA-NAT-LOT-20021
5	
6	
7	
8	
9	

6TH OF OCTOBER CITY RAIL TRANSIT MONORAIL

The Authority | Hill International Consultant | Main Contractor | Structural Designer

KEY PLAN:

REV	DATE	DSG	CHK	APP	AMENDMENTS	STATUS
B	12/05/2023	M.KH	M.KH	DR.BUM	ISSUED FOR INFORMATION	IFI
A	11/20/2022	M.KH	M.KH	DR.BUM	ISSUED FOR INFORMATION	IFI

SCALE AS SHOWN | SHOPDRAWING | DATE 12/05/2023

DRAWING TITLE
6TH OF OCTOBER MONORAIL
SERVICE WALKWAYS
ZONE (1008)
Z8-HR108

Project Code	Rubric	Initiator	Lot	Ref	Number	Revision
9 3 M	0 4 7 6	A C C	6 0 D E	P D W	G 0 8 3 9 4	B

Tekla structures

approval is subject to approval of coordination package between multi-discipline

REVIEWED WITH COMMENT
MONORAILS PROJECT

All holes are 22mm U.N.O Length & Area & Weight per piece

Mark	Profile	Grade	QTY	Length	Area	Weight
Z8-HR107	CHS48.3*4.0	S235JR	1	1332.1	0.20	5.8

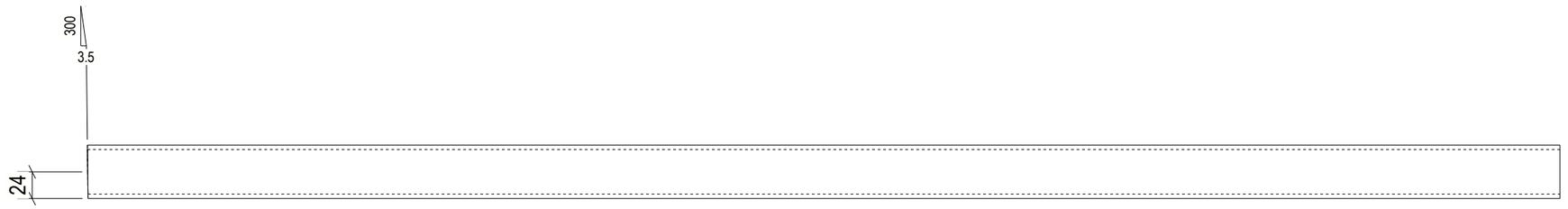

1 REQ'D AS DRAWN MK'D Z8-HR107

6 October Monorail
Engineering Unit
Valid For Construction

GENERAL NOTES:

1. THE DIMENSIONS SHOWN ARE NOMINAL (IN MILLIMETERS), U.N.O.
2. WELD SIZESHALL BE AISC MINIMUM OF 6 mm UNLESS NOTED OTHERWISE.
3. ALL FIELD WELDS SHALL BE INSPECTED PER QUALITY ASSURANCE AND SPECIAL INSPECTIONS.

REFERENCE DRAWINGS

1	93M-BOA-NAT-LOT-04833
2	93M-BOA-NAT-LOT-09170
3	93M-BOA-NAT-LOT-01976
4	93M-BOA-NAT-LOT-20021
5	
6	
7	
8	
9	

6TH OF OCTOBER CITY RAIL TRANSIT MONORAIL

The Authority | Hill International Consultant | ORASCOM BOMBARDIER Main Contractor | INNOVA Structural Designer

KEY PLAN:

REV	DATE	DSN	CHK	APP	AMENDMENTS/DESCRIPTION	STATUS
B	12/05/2023	M.KH	M.KH	DR.M.M	ISSUED FOR INFORMATION	IFI

SCALE: AS SHOWN
SHOP DRAWING
DATE: 12/05/2023

DRAWING TITLE
6TH OF OCTOBER MONORAIL
SERVICE WALKWAYS
ZONE (1008)
Z8-HR107

Project Code	Rubric	Initiator	Lot	Ref	Number	Revision
93M	047	ACC	60DEP	DWG	08395	B

Tekla structures

approval is subject to approval of coordination package between multi-discipline

REVIEWED WITH COMMENT
MONORAILS PROJECT

All holes are 22mm U.N.O Length & Area & Weight per piece

Mark	Profile	Grade	QTY	Length	Area	Weight
Z8-HR106	CHS48.3*4.0	S235JR	1	2600.4	0.39	11.4

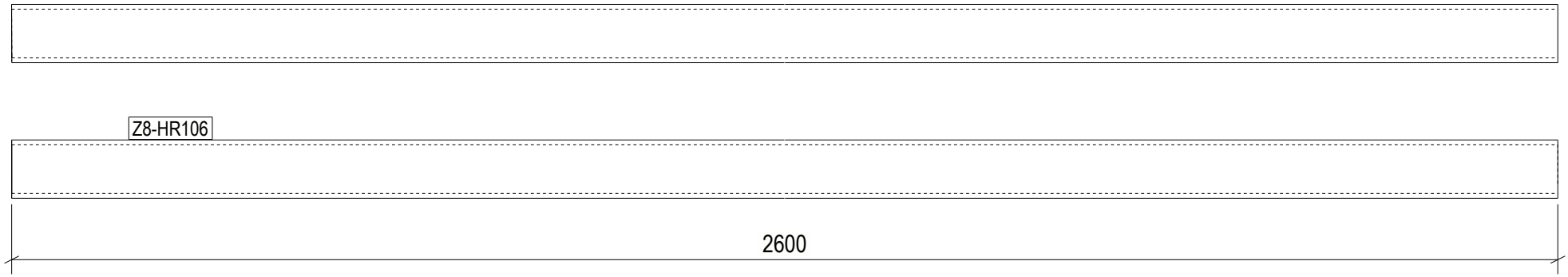

1 REQ'D AS DRAWN MK'D Z8-HR106

6 October Monorail
Engineering Unit
Valid For Construction

GENERAL NOTES:

1. THE DIMENSIONS SHOWN ARE NOMINAL (IN MILLIMETERS), U.N.O.
2. WELD SIZESHALL BE AISC MINIMUM OF 6 mm UNLESS NOTED OTHERWISE.
3. ALL FIELD WELDS SHALL BE INSPECTED PER QUALITY ASSURANCE AND SPECIAL INSPECTIONS.

REFERENCE DRAWINGS

1	93M-BOA-NAT-LOT-04833
2	93M-BOA-NAT-LOT-09170
3	93M-BOA-NAT-LOT-01976
4	93M-BOA-NAT-LOT-20021
5	
6	
7	
8	
9	

6TH OF OCTOBER CITY RAIL TRANSIT MONORAIL

The Authority — Hill International Consultant — Main Contractor — Structural Designer

KEY PLAN:

SCALE	SHOPDRAWING	DATE
AS SHOWN		12/09/2023

REV	DATE	DSG	CHK	APP	AMENDMENTS	STATUS
B	12/05/2023	M.KH	M.KH	DR.M.M	ISSUED FOR INFORMATION	IFI
A	11/20/2022	M.KH	M.KH	DR.M.M	ISSUED FOR INFORMATION	IFI

DRAWING TITLE

6TH OF OCTOBER MONORAIL
SERVICE WALKWAYS
ZONE (1008)
Z8-HR106

Project Code	Rubric	Initiator	Lot	Ref	Number	Revision
93M	047	ACC	60DEP	DWG	0839	B

Tekla structures

approval is subject to approval of coordination package between multi-discipline

REVIEWED WITH COMMENT
MONORAILS PROJECT

All holes are 22mm U.N.O Length & Area & Weight per piece

Mark	Profile	Grade	QTY	Length	Area	Weight
Z8-HR105	CHS48.3*4.0	S235JR	1	790.6	0.12	3.5

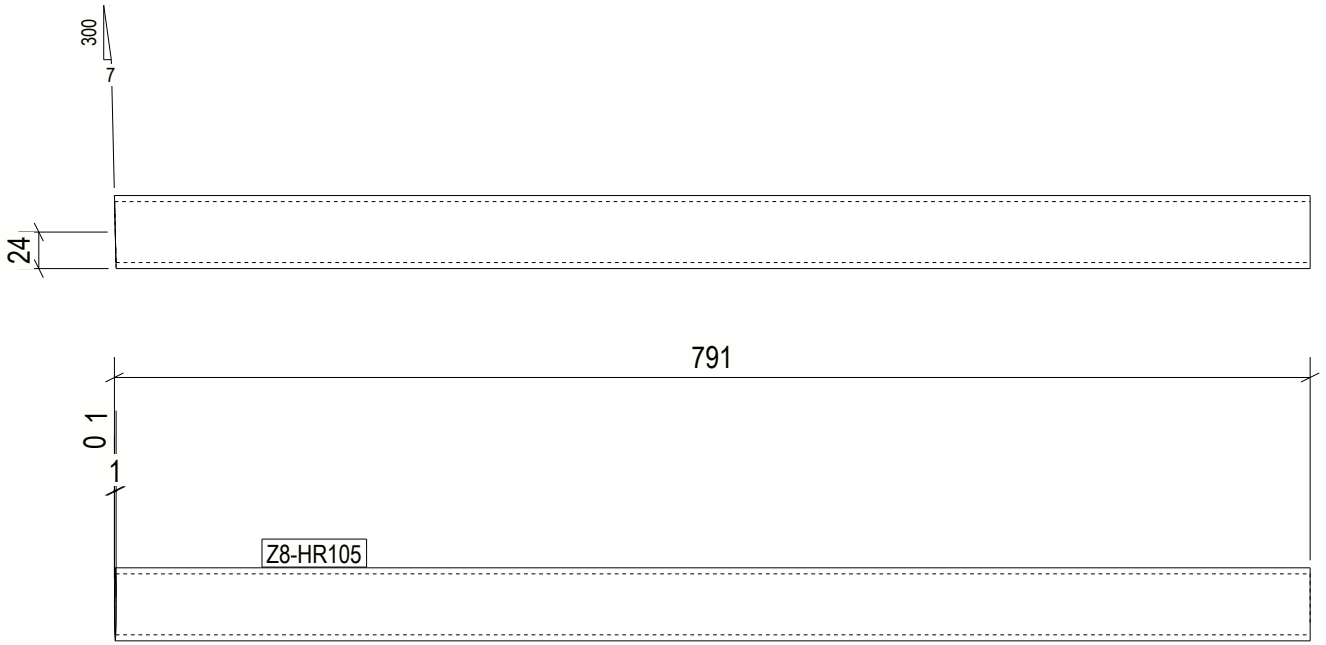

1 REQ'D AS DRAWN MK'D Z8-HR105

6 October Monorail
Engineering Unit
Valid For Construction

GENERAL NOTES:

1. THE DIMENSIONS SHOWN ARE NOMINAL (IN MILLIMETERS), U.N.O.
2. WELD SIZESHALL BE AISC MINIMUM OF 6 mm UNLESS NOTED OTHERWISE.
3. ALL FIELD WELDS SHALL BE INSPECTED PER QUALITY ASSURANCE AND SPECIAL INSPECTIONS.

REFERENCE DRAWINGS

1	93M-BOA-NAT-LOT-04833
2	93M-BOA-NAT-LOT-09170
3	93M-BOA-NAT-LOT-01976
4	93M-BOA-NAT-LOT-20021
5	
6	
7	
8	
9	

6TH OF OCTOBER CITY RAIL TRANSIT MONORAIL

The Authority | Hill International Consultant | Main Contractor | Structural Designer

KEY PLAN:

SCALE: AS SHOWN | SHOPDRAWING | DATE: 12/09/2023

REV	DATE	DSG	CHK	APP	AMENDMENTS	STATUS
B	12/05/2023	M.KH	M.KH	DR.BIM	ISSUED FOR INFORMATION	IFI
A	11/20/2022	M.KH	M.KH	DR.BIM	ISSUED FOR INFORMATION	IFI

DRAWING TITLE

6TH OF OCTOBER MONORAIL
SERVICE WALKWAYS
ZONE (1008)
Z8-HR105

Project Code	Rubric	Initiator	Lot	Ref	Number	Revision
93M	047	ACC	60DEP	DWG	0839	B

Tekla structures

approval is subject to approval of coordination package between multi-discipline

REVIEWED WITH COMMENT MONORAILS PROJECT

All holes are 22mm U.N.O Length & Area & Weight per piece						
Z8-HR104	CHS48.3*4.0	S235JR	1	2097.6	0.31	9.2
Mark	Profile	Grade	QTY	Length	Area	Weight

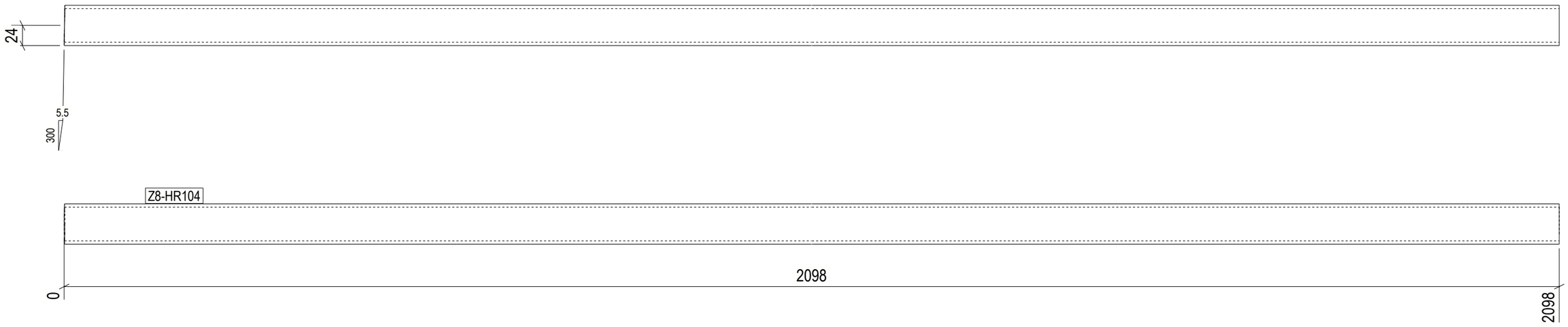

1 REQ'D AS DRAWN MK'D Z8-HR104

6 October Monorail Engineering Unit Valid For Construction

GENERAL NOTES:

1. THE DIMENSIONS SHOWN ARE NOMINAL (IN MILLIMETERS), U.N.O.
2. WELD SIZESHALL BE AISC MINIMUM OF 6 mm UNLESS NOTED OTHERWISE.
3. ALL FIELD WELDS SHALL BE INSPECTED PER QUALITY ASSURANCE AND SPECIAL INSPECTIONS.

REFERENCE DRAWINGS

1	93M-BOA-NAT-LOT-04833
2	93M-BOA-NAT-LOT-09170
3	93M-BOA-NAT-LOT-01976
4	93M-BOA-NAT-LOT-20021
5	
6	
7	
8	
9	

6TH OF OCTOBER CITY RAIL TRANSIT MONORAIL

The Authority | Hill International Consultant | ORASCOM BOMBARDIER Main Contractor | INNOVA Structural Designer

KEY PLAN:

SCALE	SHOP DRAWING	DATE
AS SHOWN		12/05/2023

REV	DATE	DSN	CHK	APP	AMENDMENTS	STATUS
B	12/05/2023	M.KH	M.KH	DR.M.M	ISSUED FOR INFORMATION	IFI

DRAWING TITLE

6TH OF OCTOBER MONORAIL SERVICE WALKWAYS ZONE (1008)
Z8-HR104

Project Code	Rubric	Initiator	Lot	Ref	Number	Revision
93M	0476	ACC	60DEP	DWG	08398	B

Tekla structures

approval is subject to approval of coordination package between multi-discipline

REVIEWED WITH COMMENT MONORAILS PROJECT

All holes are 22mm U.N.O Length & Area & Weight per piece						
Z8-HR103	CHS48.3*4.0	S235JR	1	2273.0	0.34	9.9
Mark	Profile	Grade	QTY	Length	Area	Weight

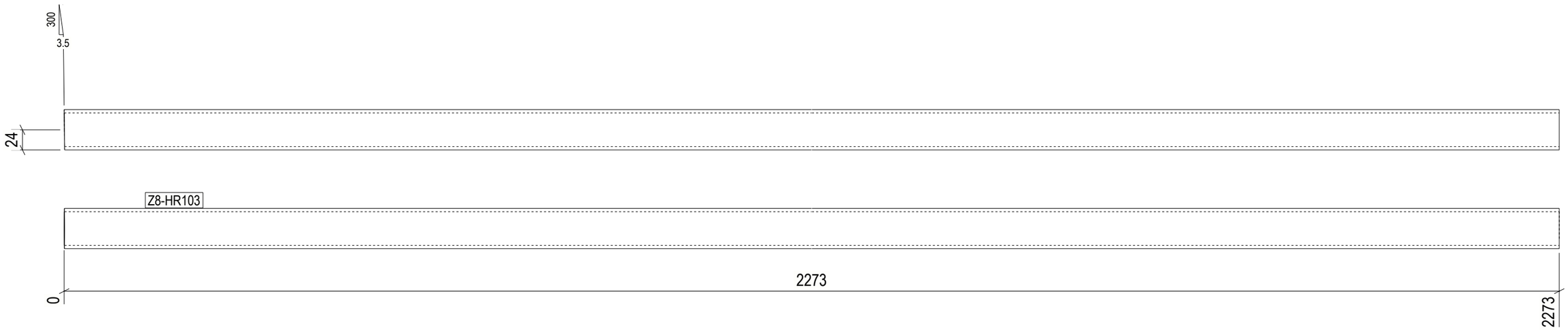

1 REQ'D AS DRAWN MK'D Z8-HR103

6 October Monorail Engineering Unit Valid For Construction

GENERAL NOTES:

1. THE DIMENSIONS SHOWN ARE NOMINAL (IN MILLIMETERS), U.N.O.
2. WELD SIZESHALL BE AISC MINIMUM OF 6 mm UNLESS NOTED OTHERWISE.
3. ALL FIELD WELDS SHALL BE INSPECTED PER QUALITY ASSURANCE AND SPECIAL INSPECTIONS.

REFERENCE DRAWINGS

1	93M-BOA-NAT-LOT-04833
2	93M-BOA-NAT-LOT-09170
3	93M-BOA-NAT-LOT-01976
4	93M-BOA-NAT-LOT-20021
5	
6	
7	
8	
9	

6TH OF OCTOBER CITY RAIL TRANSIT MONORAIL

The Authority | Hill International Consultant | Main Contractor | Structural Designer

KEY PLAN:

SCALE	SHOP DRAWING	DATE
AS SHOWN		12/05/2023

REV	DATE	DSG	CHK	APP	AMENDMENTS	STATUS
B	12/05/2023	M.KH	M.KH	DR.M.M	ISSUED FOR INFORMATION	IFI

DRAWING TITLE

6TH OF OCTOBER MONORAIL SERVICE WALKWAYS ZONE (1008)

Z8-HR103

Project Code	Rubric	Initiator	Lot	Ref	Number	Revision
93M	0476	ACC	60DEP	DWG	08399	B

Tekla structures

approval is subject to approval of coordination package between multi-discipline

REVIEWED WITH COMMENT MONORAILS PROJECT

All holes are 22mm U.N.O Length & Area & Weight per piece						
Z8-HR102	CHS48.3*4.0	S235JR	1	3140.3	0.47	13.7
Mark	Profile	Grade	QTY	Length	Area	Weight

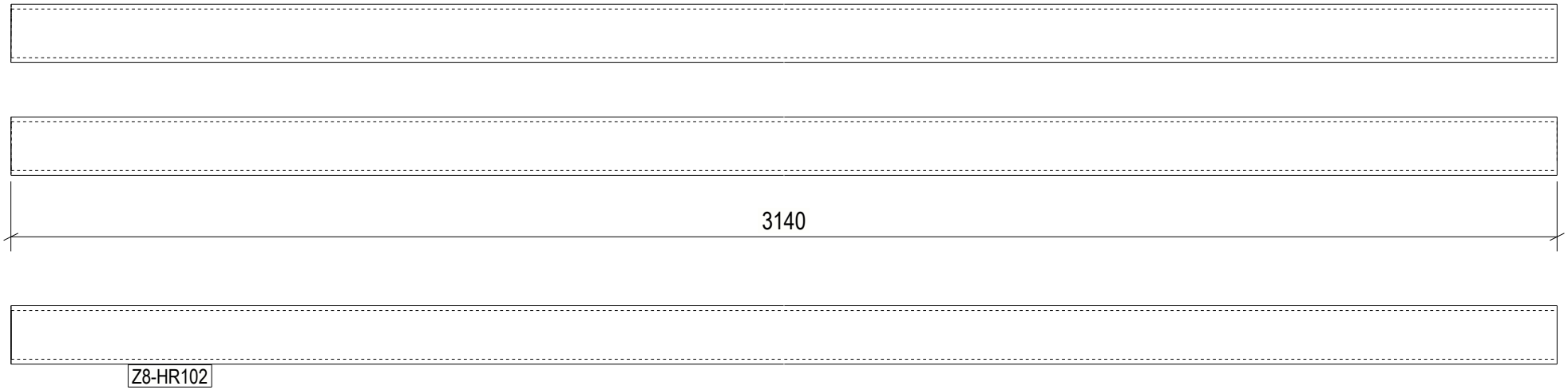

1 REQ'D AS DRAWN MK'D Z8-HR102

6 October Monorail Engineering Unit
Valid For Construction

GENERAL NOTES:

1. THE DIMENSIONS SHOWN ARE NOMINAL (IN MILLIMETERS), U.N.O.
2. WELD SIZESHALL BE AISC MINIMUM OF 6 mm UNLESS NOTED OTHERWISE.
3. ALL FIELD WELDS SHALL BE INSPECTED PER QUALITY ASSURANCE AND SPECIAL INSPECTIONS.

REFERENCE DRAWINGS

1	93M-BOA-NAT-LOT-04833
2	93M-BOA-NAT-LOT-09170
3	93M-BOA-NAT-LOT-01976
4	93M-BOA-NAT-LOT-20021
5	
6	
7	
8	
9	

6TH OF OCTOBER CITY RAIL TRANSIT MONORAIL

The Authority — Hill International Consultant — Main Contractor — Structural Designer

KEY PLAN:

SCALE	SHOPDRAWING	DATE
AS SHOWN		12/05/2023

REV	DATE	DSG	CHK	APP	AMENDMENTS	STATUS
B	12/05/2023	M.KH	M.KH	DR.M.M	ISSUED FOR INFORMATION	IFI
A	11/20/2022	M.KH	M.KH	DR.M.M	ISSUED FOR INFORMATION	IFI

DRAWING TITLE

6TH OF OCTOBER MONORAIL SERVICE WALKWAYS ZONE (1008)
Z8-HR102

Project Code	Rubric	Initiator	Lot	Ref	Number	Revision
93M	0476	ACC	60DEP	DWG	08400	B

Tekla structures

approval is subject to approval of coordination package between multi-discipline

REVIEWED WITH COMMENT
MONORAILS PROJECT

All holes are 22mm U.N.O Length & Area & Weight per piece

Mark	Profile	Grade	QTY	Length	Area	Weight
Z8-HR101	CHS48.3*4.0	S235JR	2	3143.7	0.47	13.7

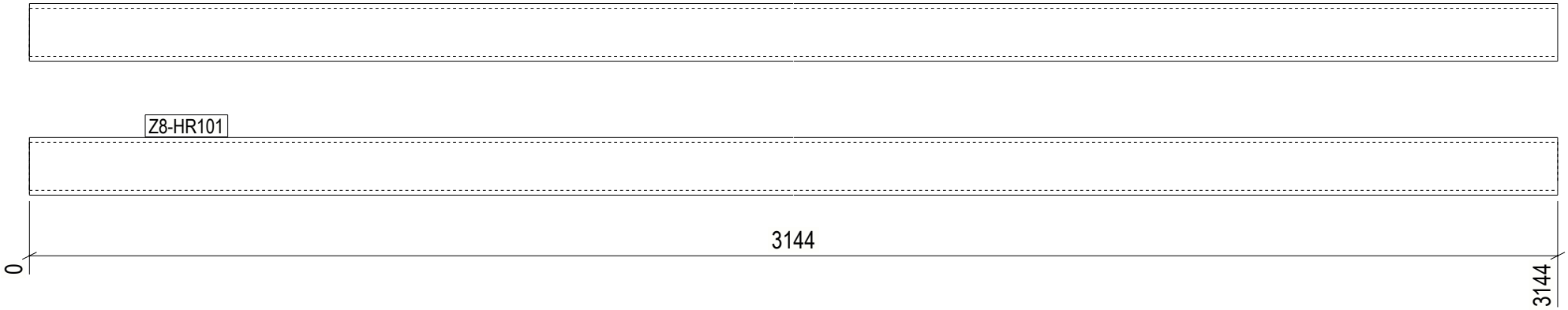

2 REQ'D AS DRAWN MK'D Z8-HR101

6 October Monorail
Engineering Unit
Valid For Construction

GENERAL NOTES:

1. THE DIMENSIONS SHOWN ARE NOMINAL (IN MILLIMETERS), U.N.O.
2. WELD SIZESHALL BE AISC MINIMUM OF 6 mm UNLESS NOTED OTHERWISE.
3. ALL FIELD WELDS SHALL BE INSPECTED PER QUALITY ASSURANCE AND SPECIAL INSPECTIONS.

REFERENCE DRAWINGS

1	93M-BOA-NAT-LOT-04833
2	93M-BOA-NAT-LOT-09170
3	93M-BOA-NAT-LOT-01976
4	93M-BOA-NAT-LOT-20021
5	
6	
7	
8	
9	

6TH OF OCTOBER CITY RAIL TRANSIT MONORAIL

The Authority | Hill International Consultant | Main Contractor | Structural Designer

KEY PLAN:

REV.	DATE	DSG	CHK	APP	AMENDMENTS	STATUS
B	12/05/2023	M.KH	M.KH	DR.BM	ISSUED FOR INFORMATION	IFI
A	11/20/2022	M.KH	M.KH	DR.BM	ISSUED FOR INFORMATION	IFI

SCALE: AS SHOWN | SHOPDRAWING | DATE: 12/05/2023

DRAWING TITLE
6TH OF OCTOBER MONORAIL
SERVICE WALKWAYS
ZONE (1008)
Z8-HR101

Project Code	Rubric	Initiator	Lot	Ref	Number	Revision
9 3 M	0 4 7 6	A C C	6 0 D E	P D W G	0 8 4 0 1	B

Tekla structures

approval is subject to approval of coordination package between multi-discipline

REVIEWED WITH COMMENT
MONORAILS PROJECT

All holes are 22mm U.N.O Length & Area & Weight per piece

Mark	Profile	Grade	QTY	Length	Area	Weight
Z8-HR100	CHS48.3*4.0	S235JR	1	3150.6	0.47	13.8

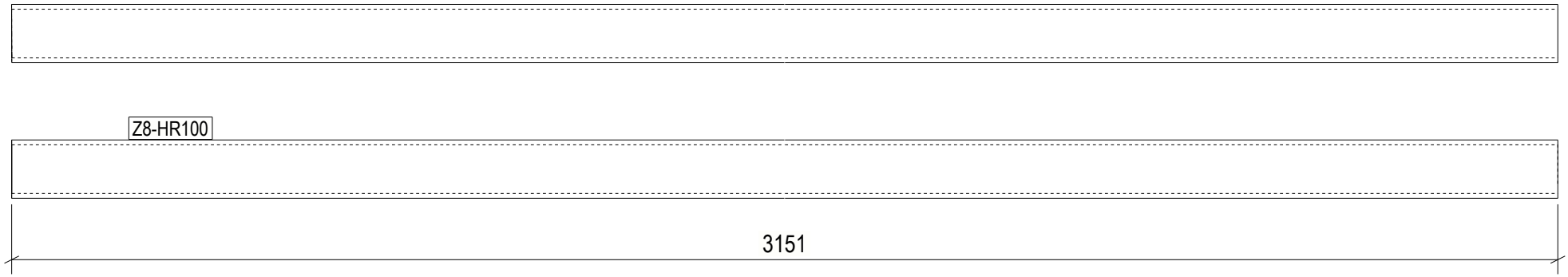

1 REQ'D AS DRAWN MK'D Z8-HR100

6 October Monorail
Engineering Unit
Valid For Construction

GENERAL NOTES:

1. THE DIMENSIONS SHOWN ARE NOMINAL (IN MILLIMETERS), U.N.O.
2. WELD SIZESHALL BE AISC MINIMUM OF 6 mm UNLESS NOTED OTHERWISE.
3. ALL FIELD WELDS SHALL BE INSPECTED PER QUALITY ASSURANCE AND SPECIAL INSPECTIONS.

REFERENCE DRAWINGS

1	93M-BOA-NAT-LOT-04833
2	93M-BOA-NAT-LOT-09170
3	93M-BOA-NAT-LOT-01976
4	93M-BOA-NAT-LOT-20021
5	
6	
7	
8	
9	

6TH OF OCTOBER CITY RAIL TRANSIT MONORAIL

The Authority — Hill International Consultant — Main Contractor — Structural Designer

KEY PLAN:

REV.	DATE	DSG	CHK	APP	AMENDMENTS	STATUS
B	12/05/2023	M.KH	M.KH	DR.M.M	ISSUED FOR INFORMATION	IFI
A	11/20/2022	M.KH	M.KH	DR.M.M	ISSUED FOR INFORMATION	IFI

SCALE: AS SHOWN | SHOPDRAWING | DATE: 12/05/2023

DRAWING TITLE
6TH OF OCTOBER MONORAIL
SERVICE WALKWAYS
ZONE (1008)
Z8-HR100

Project Code	Rubric	Initiator	Lot	Ref	Number	Revision
9 3 M	0 4 7 6	A C C	6 0 D E P	D W G	0 8 4 0 2	B

Tekla structures

All holes are 22mm U.N.O Length & Area & Weight per piece

Mark	Profile	Grade	QTY	Length	Area	Weight
Z8-HR099	CHS48.3*4.0	S235JR	1	2267.2	0.34	9.9

approval is subject to approval of coordination package between multi-discipline

REVIEWED WITH COMMENT MONORAILS PROJECT

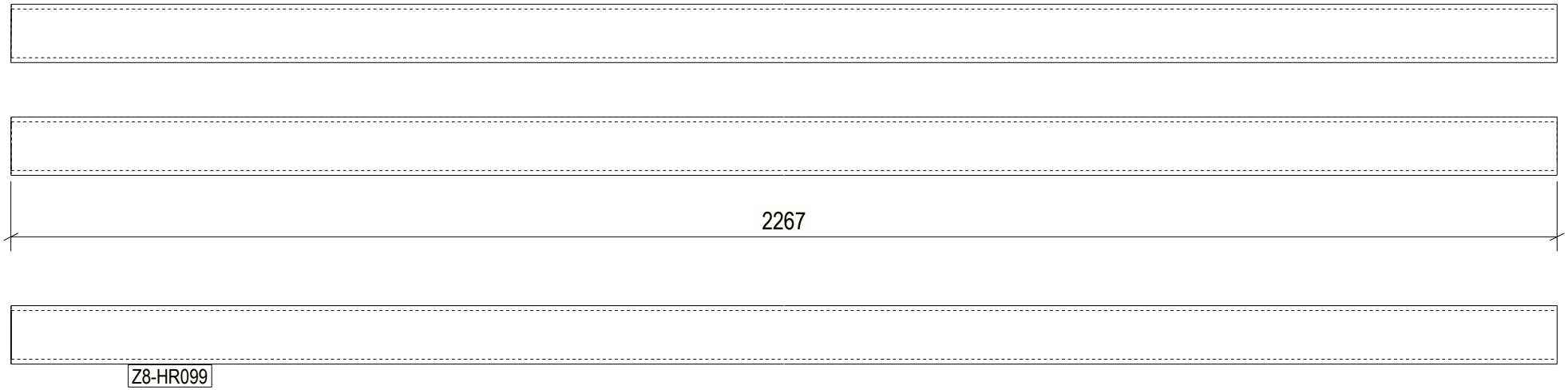

1 REQ'D AS DRAWN MK'D Z8-HR099

6 October Monorail Engineering Unit Valid For Construction

GENERAL NOTES:

1. THE DIMENSIONS SHOWN ARE NOMINAL (IN MILLIMETERS), U.N.O.
2. WELD SIZESHALL BE AISC MINIMUM OF 6 mm UNLESS NOTED OTHERWISE.
3. ALL FIELD WELDS SHALL BE INSPECTED PER QUALITY ASSURANCE AND SPECIAL INSPECTIONS.

REFERENCE DRAWINGS

1	93M-BOA-NAT-LOT-04833
2	93M-BOA-NAT-LOT-09170
3	93M-BOA-NAT-LOT-01976
4	93M-BOA-NAT-LOT-20021
5	
6	
7	
8	
9	

6TH OF OCTOBER CITY RAIL TRANSIT MONORAIL

The Authority | Hill International Consultant | Main Contractor | Structural Designer

KEY PLAN:

SCALE AS SHOWN | SHOPDRAWING | DATE 12/09/2023

REV.	DATE	DSG	CHK	APP	AMENDMENTS	STATUS
B	12/05/2023	M.KH	M.KH	DR.M.M	ISSUED FOR INFORMATION	IFI
A	11/20/2022	M.KH	M.KH	DR.M.M	ISSUED FOR INFORMATION	IFI

DRAWING TITLE

6TH OF OCTOBER MONORAIL SERVICE WALKWAYS ZONE (1008) Z8-HR099

Project Code	Rubric	Initiator	Lot	Ref	Number	Revision
9 3 M	0 4 7 6	A C C	6 0 D E P	D W G	0 8 4 0 3	B

Tekla structures

approval is subject to approval of coordination package between multi-discipline

REVIEWED WITH COMMENT
MONORAILS PROJECT

All holes are 22mm U.N.O Length & Area & Weight per piece						
Z8-HR098	CHS48.3*4.0	S235JR	1	777.3	0.12	3.4
Mark	Profile	Grade	QTY	Length	Area	Weight

1 REQ'D AS DRAWN MK'D Z8-HR098

6 October Monorail
Engineering Unit
Valid For Construction

GENERAL NOTES:

1. THE DIMENSIONS SHOWN ARE NOMINAL (IN MILLIMETERS), U.N.O.
2. WELD SIZESHALL BE AISC MINIMUM OF 6 mm UNLESS NOTED OTHERWISE.
3. ALL FIELD WELDS SHALL BE INSPECTED PER QUALITY ASSURANCE AND SPECIAL INSPECTIONS.

REFERENCE DRAWINGS

1	93M-BOA-NAT-LOT-04833
2	93M-BOA-NAT-LOT-09170
3	93M-BOA-NAT-LOT-01976
4	93M-BOA-NAT-LOT-20021
5	
6	
7	
8	
9	

6TH OF OCTOBER CITY RAIL TRANSIT MONORAIL

The Authority | Hill International Consultant | Main Contractor | Structural Designer

KEY PLAN:

SCALE	SHOP DRAWING	DATE
AS SHOWN		12/05/2023

REV	DATE	DSN	CHK	APP	AMENDMENTS	STATUS
B	12/05/2023	M.KH	M.KH	DR.M.M	ISSUED FOR INFORMATION	IFI

DRAWING TITLE

6TH OF OCTOBER MONORAIL
SERVICE WALKWAYS
ZONE (1008)
Z8-HR098

Project Code	Rubric	Initiator	Lot	Ref	Number	Revision
9 3 M	0 4 7 6	A C C	6 0 D E P	D W G	0 8 4 0 4	B

Tekla structures

approval is subject to approval of coordination package between multi-discipline

REVIEWED WITH COMMENT
MONORAILS PROJECT

All holes are 22mm U.N.O Length & Area & Weight per piece

Mark	Profile	Grade	QTY	Length	Area	Weight
Z8-HR097	CHS48.3*4.0	S235JR	1	2095.3	0.31	9.2

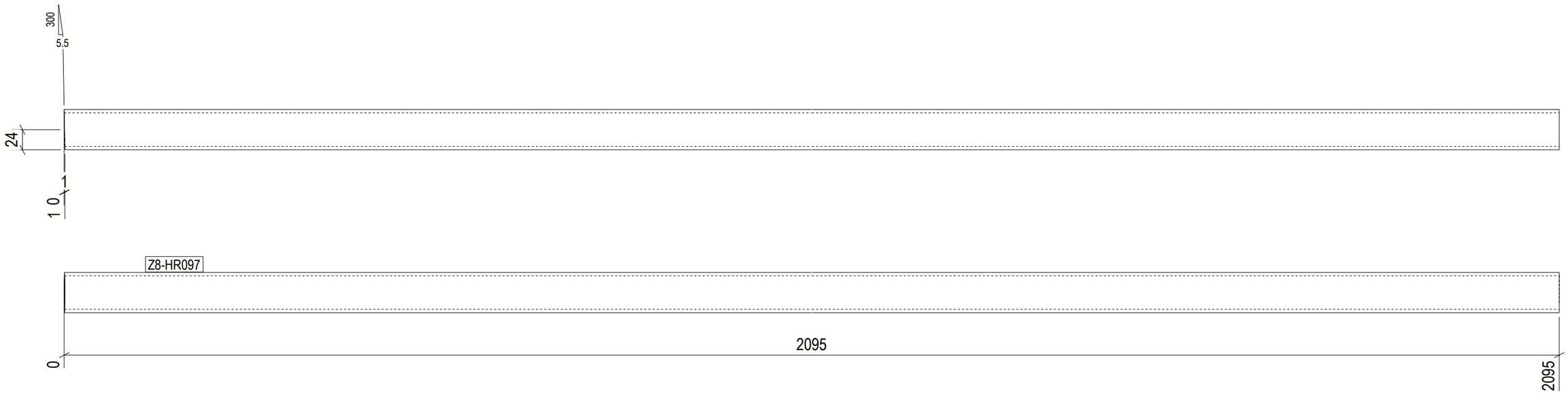

1 REQ'D AS DRAWN MK'D Z8-HR097

GENERAL NOTES:

1. THE DIMENSIONS SHOWN ARE NOMINAL (IN MILLIMETERS), U.N.O.
2. WELD SIZESHALL BE AISC MINIMUM OF 6 mm UNLESS NOTED OTHERWISE.
3. ALL FIELD WELDS SHALL BE INSPECTED PER QUALITY ASSURANCE AND SPECIAL INSPECTIONS.

REFERENCE DRAWINGS

1	93M-BOA-NAT-LOT-04833
2	93M-BOA-NAT-LOT-09170
3	93M-BOA-NAT-LOT-01976
4	93M-BOA-NAT-LOT-20021
5	
6	
7	
8	
9	

6TH OF OCTOBER CITY RAIL TRANSIT MONORAIL

The Authority — Hill International Consultant — Main Contractor — Structural Designer

KEY PLAN:

6 October Monorail Engineering Unit Valid For Construction

REV	DATE	DRN	CHK	APP	AMENDMENTS	STATUS
B	12/05/2023	M.KH	M.KH	DR.M.M	ISSUED FOR INFORMATION	IFI

SCALE: AS SHOWN — SHOP DRAWING — DATE: 12/05/2023

DRAWING TITLE

6TH OF OCTOBER MONORAIL SERVICE WALKWAYS ZONE (1008)
Z8-HR097

Project Code	Rubric	Initiator	Lot	Ref	Number	Revision
93	M047	ACC60	DEP	DWG	08405	B

Tekla structures

approval is subject to approval of coordination package between multi-discipline

REVIEWED WITH COMMENT MONORAILS PROJECT

All holes are 22mm U.N.O Length & Area & Weight per piece						
Z8-HR096	CHS48.3*4.0	S235JR	1	5905.6	0.89	25.8
Mark	Profile	Grade	QTY	Length	Area	Weight

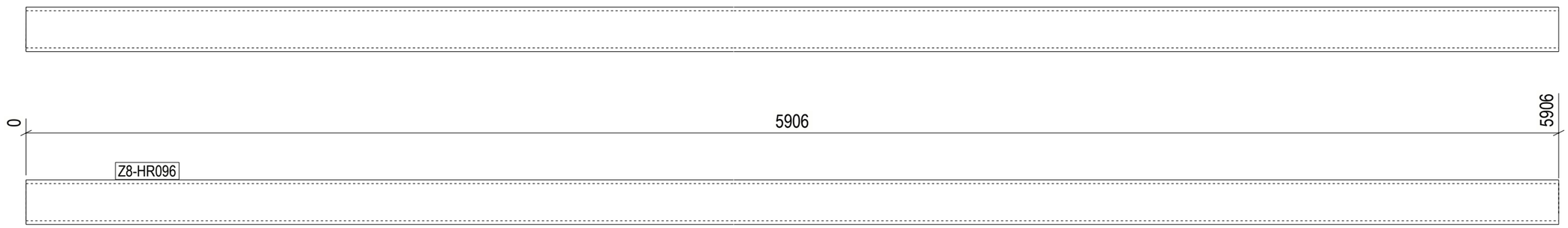

1 REQ'D AS DRAWN MK'D Z8-HR096

6 October Monorail Engineering Unit Valid For Construction

GENERAL NOTES:

1. THE DIMENSIONS SHOWN ARE NOMINAL (IN MILLIMETERS), U.N.O.
2. WELD SIZESHALL BE AISC MINIMUM OF 6 mm UNLESS NOTED OTHERWISE.
3. ALL FIELD WELDS SHALL BE INSPECTED PER QUALITY ASSURANCE AND SPECIAL INSPECTIONS.

REFERENCE DRAWINGS

1	93M-BOA-NAT-LOT-04833
2	93M-BOA-NAT-LOT-09170
3	93M-BOA-NAT-LOT-01976
4	93M-BOA-NAT-LOT-20021
5	
6	
7	
8	
9	

6TH OF OCTOBER CITY RAIL TRANSIT MONORAIL

The Authority | Hill International Consultant | ORASCOM BOMBARDIER Main Contractor | INNOVA Structural Designer

KEY PLAN:

SCALE	SHOP DRAWING	DATE
AS SHOWN		12/05/2023

REV	DATE	DSN	CHK	APP	AMENDMENTS	STATUS
B	12/05/2023	M.KH	M.KH	DR.M.M	ISSUED FOR INFORMATION	IFI
	11/04/22					

DRAWING TITLE

6TH OF OCTOBER MONORAIL SERVICE WALKWAYS ZONE (1008)

Z8-HR096

Project Code	Rubric	Initiator	Lot	Ref	Number	Revision
93M	0476	ACC	60DEP	DWG	08406	B

Tekla structures

approval is subject to approval of coordination package between multi-discipline

REVIEWED WITH COMMENT
MONORAILS PROJECT

All holes are 22mm U.N.O Length & Area & Weight per piece

Mark	Profile	Grade	QTY	Length	Area	Weight
Z8-HR095	CHS48.3*4.0	S235JR	1	5967.4	0.90	26.1

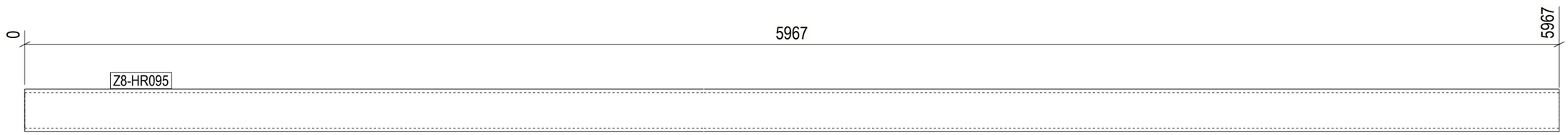

1 REQ'D AS DRAWN MK'D Z8-HR095

6 October Monorail
Engineering Unit
Valid For Construction

GENERAL NOTES:

1. THE DIMENSIONS SHOWN ARE NOMINAL (IN MILLIMETERS), U.N.O.
2. WELD SIZESHALL BE AISC MINIMUM OF 6 mm UNLESS NOTED OTHERWISE.
3. ALL FIELD WELDS SHALL BE INSPECTED PER QUALITY ASSURANCE AND SPECIAL INSPECTIONS.

REFERENCE DRAWINGS

1	93M-BOA-NAT-LOT-04833
2	93M-BOA-NAT-LOT-09170
3	93M-BOA-NAT-LOT-01976
4	93M-BOA-NAT-LOT-20021
5	
6	
7	
8	
9	

6TH OF OCTOBER CITY RAIL TRANSIT MONORAIL

The Authority | Hill International Consultant | Main Contractor | Structural Designer

KEY PLAN:

SCALE: AS SHOWN | SHOP DRAWING | DATE: 12/05/2023

REV	DATE	DSN	CHK	APP	AMENDMENTS/REVISION	STATUS
B	12/05/2023	M.KH	M.KH	DR.M.M	ISSUED FOR INFORMATION	IFI

DRAWING TITLE

6TH OF OCTOBER MONORAIL
SERVICE WALKWAYS
ZONE (1008)
Z8-HR095

Project Code	Rubric	Initiator	Lot	Ref	Number	Revision
93M	0476	ACC	600	DEP	DWG	08407	B

Tekla structures

approval is subject to approval of coordination package between multi-discipline

REVIEWED WITH COMMENT
MONORAILS PROJECT

All holes are 22mm U.N.O Length & Area & Weight per piece

Mark	Profile	Grade	QTY	Length	Area	Weight
Z8-HR094	CHS48.3*4.0	S235JR	1	3476.5	0.52	15.2

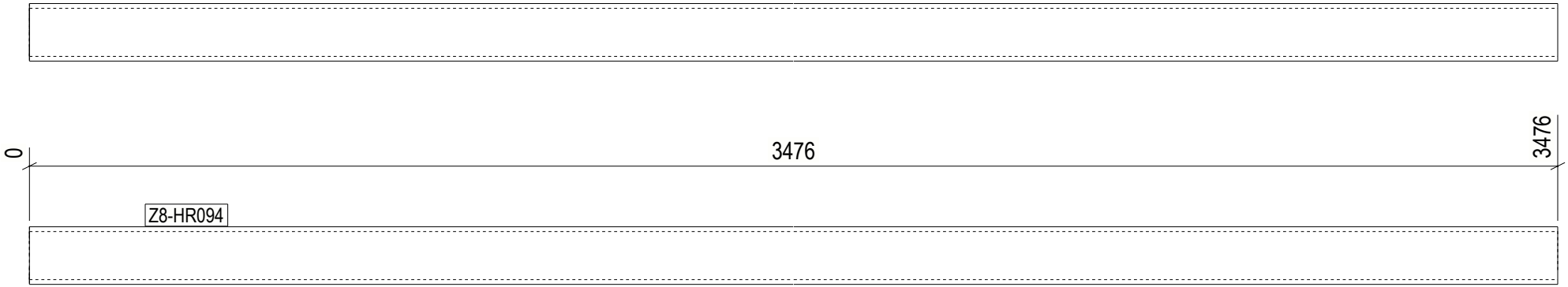

1 REQ'D AS DRAWN MK'D Z8-HR094

6 October Monorail
Engineering Unit
Valid For Construction

GENERAL NOTES:

1. THE DIMENSIONS SHOWN ARE NOMINAL (IN MILLIMETERS), U.N.O.
2. WELD SIZESHALL BE AISC MINIMUM OF 6 mm UNLESS NOTED OTHERWISE.
3. ALL FIELD WELDS SHALL BE INSPECTED PER QUALITY ASSURANCE AND SPECIAL INSPECTIONS.

REFERENCE DRAWINGS

1	93M-BOA-NAT-LOT-04833
2	93M-BOA-NAT-LOT-09170
3	93M-BOA-NAT-LOT-01976
4	93M-BOA-NAT-LOT-20021
5	
6	
7	
8	
9	

6TH OF OCTOBER CITY RAIL TRANSIT MONORAIL

The Authority — Hill International Consultant — Main Contractor — Structural Designer

KEY PLAN:

SCALE: AS SHOWN | SHOPDRAWING | DATE: 12/09/2023

REV.	DATE	DSG	CHK	APP	AMENDMENTS	STATUS
B	12/05/2023	M.KH	M.KH	DR.M.M	ISSUED FOR INFORMATION	IFI
A	11/20/2022	M.KH	M.KH	DR.M.M	ISSUED FOR INFORMATION	IFI

DRAWING TITLE

6TH OF OCTOBER MONORAIL
SERVICE WALKWAYS
ZONE (1008)
Z8-HR094

Project Code	Rubric	Initiator	Lot	Ref	Number	Revision
93M	047	6ACC	60DE	PDWG	0840	B

Tekla structures

approval is subject to approval of coordination package between multi-discipline

REVIEWED WITH COMMENT
MONORAILS PROJECT

All holes are 22mm U.N.O Length & Area & Weight per piece						
Z8-HR093	CHS48.3*4.0	S235JR	1	3418.4	0.51	14.9
Mark	Profile	Grade	QTY	Length	Area	Weight

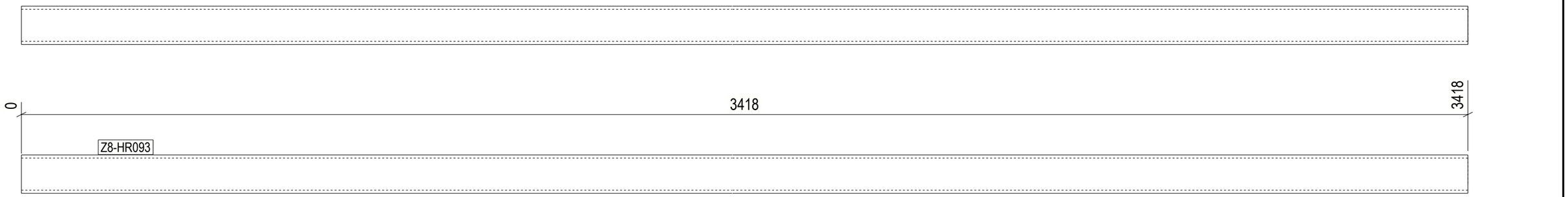

1 REQ'D AS DRAWN MK'D Z8-HR093

GENERAL NOTES:

1. THE DIMENSIONS SHOWN ARE NOMINAL (IN MILLIMETERS), U.N.O.
2. WELD SIZESHALL BE AISC MINIMUM OF 6 mm UNLESS NOTED OTHERWISE.
3. ALL FIELD WELDS SHALL BE INSPECTED PER QUALITY ASSURANCE AND SPECIAL INSPECTIONS.

REFERENCE DRAWINGS

1	93M-BOA-NAT-LOT-04833
2	93M-BOA-NAT-LOT-09170
3	93M-BOA-NAT-LOT-01976
4	93M-BOA-NAT-LOT-20021
5	
6	
7	
8	
9	

6TH OF OCTOBER CITY RAIL TRANSIT MONORAIL

The Authority | Hill International Consultant | Main Contractor | Structural Designer

KEY PLAN:

6 October Monorail Engineering Unit
Valid For Construction

SCALE	SHOP DRAWING	DATE
AS SHOWN		12/05/2023

REV	DATE	DSN	CHK	APP	AMENDMENTS/REVISION	STATUS
B	12/05/2023	M.KH	M.KH	DR.M.M	ISSUED FOR INFORMATION	IFI

DRAWING TITLE

6TH OF OCTOBER MONORAIL
SERVICE WALKWAYS
ZONE (1008)
Z8-HR093

Project Code	Rubric	Initiator	Lot	Ref	Number	Revision
93M	0476	ACC	600	DEP	DWG	08409	B

Tekla structures

approval is subject to approval of coordination package between multi-discipline

REVIEWED WITH COMMENT
MONORAILS PROJECT

All holes are 22mm U.N.O Length & Area & Weight per piece

Mark	Profile	Grade	QTY	Length	Area	Weight
Z8-HR092	CHS48.3*4.0	S235JR	1	5450.3	0.82	23.8

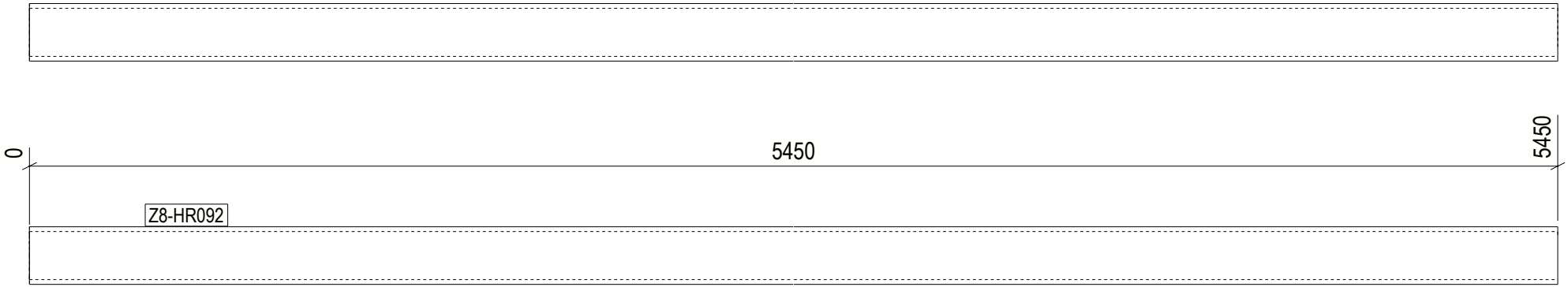

1 REQ'D AS DRAWN MK'D Z8-HR092

6 October Monorail
Engineering Unit
Valid For Construction

GENERAL NOTES:

1. THE DIMENSIONS SHOWN ARE NOMINAL (IN MILLIMETERS), U.N.O.
2. WELD SIZESHALL BE AISC MINIMUM OF 6 mm UNLESS NOTED OTHERWISE.
3. ALL FIELD WELDS SHALL BE INSPECTED PER QUALITY ASSURANCE AND SPECIAL INSPECTIONS.

REFERENCE DRAWINGS

1	93M-BOA-NAT-LOT-04833
2	93M-BOA-NAT-LOT-09170
3	93M-BOA-NAT-LOT-01976
4	93M-BOA-NAT-LOT-20021
5	
6	
7	
8	
9	

6TH OF OCTOBER CITY RAIL TRANSIT MONORAIL

The Authority — Hill International Consultant — Main Contractor — Structural Designer

KEY PLAN:

REV.	DATE	DSG	CHK	APP	AMENDMENTS	STATUS
B	12/05/2023	M.KH	M.KH	DR.M.M	ISSUED FOR INFORMATION	IFI
A	11/20/2022	M.KH	M.KH	DR.M.M	ISSUED FOR INFORMATION	IFI

SCALE: AS SHOWN | SHOPDRAWING | DATE: 12/05/2023

DRAWING TITLE
6TH OF OCTOBER MONORAIL
SERVICE WALKWAYS
ZONE (1008)
Z8-HR092

Project Code	Rubric	Initiator	Lot	Ref	Number	Revision
93M	476	ACC	60	DEP	DWG	08410	B

Tekla structures

approval is subject to approval of coordination package between multi-discipline

REVIEWED WITH COMMENT
MONORAILS PROJECT

All holes are 22mm U.N.O Length & Area & Weight per piece

Mark	Profile	Grade	QTY	Length	Area	Weight
Z8-HR091	CHS48.3*4.0	S235JR	1	5450.3	0.82	23.8

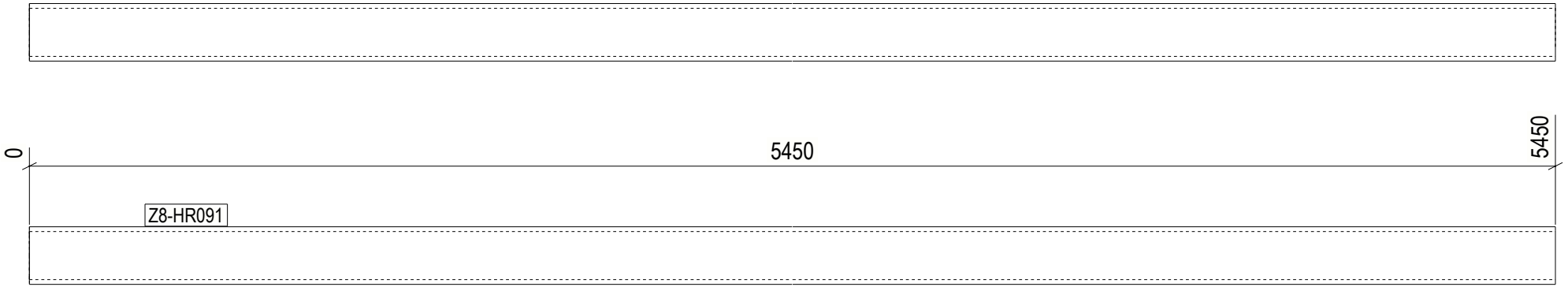

1 REQ'D AS DRAWN MK'D Z8-HR091

6 October Monorail
Engineering Unit
Valid For Construction

GENERAL NOTES:

1. THE DIMENSIONS SHOWN ARE NOMINAL (IN MILLIMETERS), U.N.O.
2. WELD SIZESHALL BE AISC MINIMUM OF 6 mm UNLESS NOTED OTHERWISE.
3. ALL FIELD WELDS SHALL BE INSPECTED PER QUALITY ASSURANCE AND SPECIAL INSPECTIONS.

REFERENCE DRAWINGS

1	93M-BOA-NAT-LOT-04833
2	93M-BOA-NAT-LOT-09170
3	93M-BOA-NAT-LOT-01976
4	93M-BOA-NAT-LOT-20021
5	
6	
7	
8	
9	

6TH OF OCTOBER CITY RAIL TRANSIT MONORAIL

The Authority — Hill International Consultant — Main Contractor — Structural Designer

KEY PLAN:

REV.	DATE	DSG	CHK	APP	AMENDMENTS	STATUS
B	12/05/2023	M.KH	M.KH	DR.M.M	ISSUED FOR INFORMATION	IFI
A	11/20/2022	M.KH	M.KH	DR.M.M	ISSUED FOR INFORMATION	IFI

SCALE: AS SHOWN | SHOPDRAWING | DATE: 12/05/2023

DRAWING TITLE
6TH OF OCTOBER MONORAIL
SERVICE WALKWAYS
ZONE (1008)
Z8-HR091

Project Code	Rubric	Initiator	Lot	Ref	Number	Revision
9 3 M	0 4 7 6	A C C	6 0 D E P	D W G	0 8 4 1 1	B

Tekla structures

approval is subject to approval of coordination package between multi-discipline

REVIEWED WITH COMMENT
MONORAILS PROJECT

All holes are 22mm U.N.O Length & Area & Weight per piece

Mark	Profile	Grade	QTY	Length	Area	Weight
Z8-HR090	CHS48.3*4.0	S235JR	1	746.8	0.11	3.3

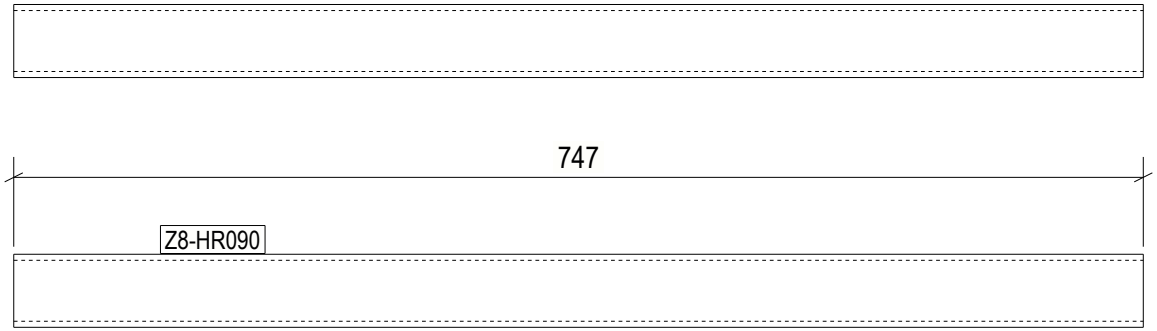

1 REQ'D AS DRAWN MK'D Z8-HR090

6 October Monorail
Engineering Unit
Valid For Construction

GENERAL NOTES:

1. THE DIMENSIONS SHOWN ARE NOMINAL (IN MILLIMETERS), U.N.O.
2. WELD SIZESHALL BE AISC MINIMUM OF 6 mm UNLESS NOTED OTHERWISE.
3. ALL FIELD WELDS SHALL BE INSPECTED PER QUALITY ASSURANCE AND SPECIAL INSPECTIONS.

REFERENCE DRAWINGS

1	93M-BOA-NAT-LOT-04833
2	93M-BOA-NAT-LOT-09170
3	93M-BOA-NAT-LOT-01976
4	93M-BOA-NAT-LOT-20021
5	
6	
7	
8	
9	

6TH OF OCTOBER CITY RAIL TRANSIT MONORAIL

The Authority | Hill International Consultant | Main Contractor | Structural Designer

KEY PLAN:

REV.	DATE	DSG	CHK	APP	AMENDMENTS	STATUS
B	12/05/2023	M.KH	M.KH	DR.M.M	ISSUED FOR INFORMATION	IFI
A	11/20/2022	M.KH	M.KH	DR.M.M	ISSUED FOR INFORMATION	IFI

SCALE: AS SHOWN | SHOPDRAWING | DATE: 12/05/2023

DRAWING TITLE
6TH OF OCTOBER MONORAIL
SERVICE WALKWAYS
ZONE (1008)
Z8-HR090

Project Code	Rubric	Initiator	Lot	Ref	Number	Revision
9 3 M	0 4 7 6	A C C	6 0 D E	P D W	G 0 8 4 1 2	B

Tekla structures

All holes are 22mm U.N.O Length & Area & Weight per piece

Mark	Profile	Grade	QTY	Length	Area	Weight
Z8-HR089	CHS48.3*4.0	S235JR	1	657.0	0.10	2.9

approval is subject to approval of coordination package between multi-discipline

REVIEWED WITH COMMENT
MONORAILS PROJECT

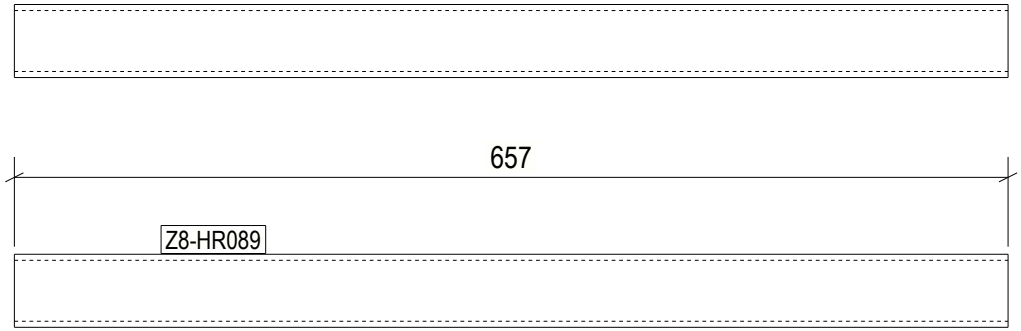

1 REQ'D AS DRAWN MK'D Z8-HR089

6 October Monorail
Engineering Unit
Valid For Construction

GENERAL NOTES:

1. THE DIMENSIONS SHOWN ARE NOMINAL (IN MILLIMETERS), U.N.O.
2. WELD SIZESHALL BE AISC MINIMUM OF 6 mm UNLESS NOTED OTHERWISE.
3. ALL FIELD WELDS SHALL BE INSPECTED PER QUALITY ASSURANCE AND SPECIAL INSPECTIONS.

REFERENCE DRAWINGS

1	93M-BOA-NAT-LOT-04833
2	93M-BOA-NAT-LOT-09170
3	93M-BOA-NAT-LOT-01976
4	93M-BOA-NAT-LOT-20021
5	
6	
7	
8	
9	

6TH OF OCTOBER CITY RAIL TRANSIT MONORAIL

The Authority | Hill International Consultant | Main Contractor | Structural Designer

KEY PLAN:

REV.	DATE	DSG	CHK	APP	AMENDMENTS	STATUS
B	12/05/2023	M.KH	M.KH	DR.BM	ISSUED FOR INFORMATION	IFI
A	11/20/2022	M.KH	M.KH	DR.BM	ISSUED FOR INFORMATION	IFI

SCALE: AS SHOWN | SHOPDRAWING | DATE: 12/05/2023

DRAWING TITLE
6TH OF OCTOBER MONORAIL
SERVICE WALKWAYS
ZONE (1008)
Z8-HR089

Project Code	Rubric	Initiator	Lot	Ref	Number	Revision
9 3 M	0 4 7 6	A C C	6 0 D E P	D W G	0 8 4 1 3	B

Tekla structures

approval is subject to approval of coordination package between multi-discipline

REVIEWED WITH COMMENT
MONORAILS PROJECT

All holes are 22mm U.N.O Length & Area & Weight per piece

Mark	Profile	Grade	QTY	Length	Area	Weight
Z8-HR088	CHS48.3*4.0	S235JR	1	311.8	0.05	1.4

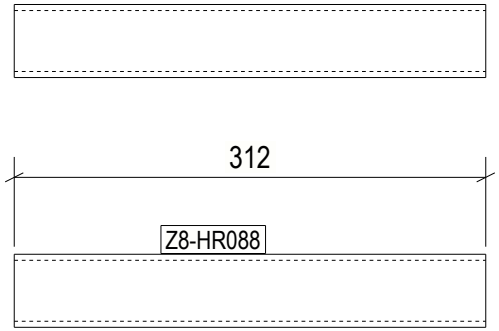

1 REQ'D AS DRAWN MK'D Z8-HR088

6 October Monorail
Engineering Unit
Valid For Construction

GENERAL NOTES:

1. THE DIMENSIONS SHOWN ARE NOMINAL (IN MILLIMETERS), U.N.O.
2. WELD SIZESHALL BE AISC MINIMUM OF 6 mm UNLESS NOTED OTHERWISE.
3. ALL FIELD WELDS SHALL BE INSPECTED PER QUALITY ASSURANCE AND SPECIAL INSPECTIONS.

REFERENCE DRAWINGS

1	93M-BOA-NAT-LOT-04833
2	93M-BOA-NAT-LOT-09170
3	93M-BOA-NAT-LOT-01976
4	93M-BOA-NAT-LOT-20021
5	
6	
7	
8	
9	

6TH OF OCTOBER CITY RAIL TRANSIT MONORAIL

The Authority — Hill International Consultant — Main Contractor — Structural Designer

KEY PLAN:

REV.	DATE	DSG	CHK	APP	AMENDMENTS	STATUS
B	12/05/2023	M.KH	M.KH	DR.BIM	ISSUED FOR INFORMATION	IFI
A	11/20/2022	M.KH	M.KH	DR.BIM	ISSUED FOR INFORMATION	IFI

SCALE: AS SHOWN | SHOPDRAWING | DATE: 12/05/2023

DRAWING TITLE
6TH OF OCTOBER MONORAIL
SERVICE WALKWAYS
ZONE (1008)
Z8-HR088

Project Code	Rubric	Initiator	Lot	Ref	Number	Revision
9 3 M	0 4 7 6	A C C	6 0	D E P	D W G	0 8 4 1 4	B

Tekla structures

approval is subject to approval of coordination package between multi-discipline

REVIEWED WITH COMMENT MONORAILS PROJECT

All holes are 22mm U.N.O Length & Area & Weight per piece						
Z8-HR087	CHS48.3*4.0	S235JR	1	252.6	0.04	1.1
Mark	Profile	Grade	QTY	Length	Area	Weight

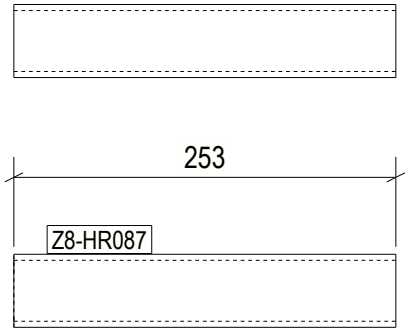

1 REQ'D AS DRAWN MK'D Z8-HR087

6 October Monorail Engineering Unit
Valid For Construction

GENERAL NOTES:

1. THE DIMENSIONS SHOWN ARE NOMINAL (IN MILLIMETERS), U.N.O.
2. WELD SIZESHALL BE AISC MINIMUM OF 6 mm UNLESS NOTED OTHERWISE.
3. ALL FIELD WELDS SHALL BE INSPECTED PER QUALITY ASSURANCE AND SPECIAL INSPECTIONS.

REFERENCE DRAWINGS

1	93M-BOA-NAT-LOT-04833
2	93M-BOA-NAT-LOT-09170
3	93M-BOA-NAT-LOT-01976
4	93M-BOA-NAT-LOT-20021
5	
6	
7	
8	
9	

6TH OF OCTOBER CITY RAIL TRANSIT MONORAIL

The Authority — Hill International Consultant — Main Contractor — Structural Designer

KEY PLAN:

SCALE	SHOPDRAWING	DATE
AS SHOWN		12/05/2023

REV	DATE	DSG	CHK	APP	AMENDMENTS	STATUS
B	12/05/2023	M.KH	M.KH	DR.M.M	ISSUED FOR INFORMATION	IFI
A	11/20/2022	M.KH	M.KH	DR.M.M	ISSUED FOR INFORMATION	IFI

DRAWING TITLE

6TH OF OCTOBER MONORAIL SERVICE WALKWAYS ZONE (1008)
Z8-HR087

Project Code	Rubric	Initiator	Lot	Ref	Number	Revision
93M	0476	ACC	60DEP	DWG	0841	5 B

Tekla structures

approval is subject to approval of coordination package between multi-discipline

REVIEWED WITH COMMENT
MONORAILS PROJECT

All holes are 22mm U.N.O Length & Area & Weight per piece						
Z8-HR086	CHS48.3*4.0	S235JR	1	3892.9	0.58	17.0
Mark	Profile	Grade	QTY	Length	Area	Weight

Z8-HR086

3893

1 REQ'D AS DRAWN MK'D Z8-HR086

6 October Monorail
Engineering Unit
Valid For Construction

GENERAL NOTES:

1. THE DIMENSIONS SHOWN ARE NOMINAL (IN MILLIMETERS), U.N.O.
2. WELD SIZESHALL BE AISC MINIMUM OF 6 mm UNLESS NOTED OTHERWISE.
3. ALL FIELD WELDS SHALL BE INSPECTED PER QUALITY ASSURANCE AND SPECIAL INSPECTIONS.

REFERENCE DRAWINGS

1	93M-BOA-NAT-LOT-04833
2	93M-BOA-NAT-LOT-09170
3	93M-BOA-NAT-LOT-01976
4	93M-BOA-NAT-LOT-20021
5	
6	
7	
8	
9	

6TH OF OCTOBER CITY RAIL TRANSIT MONORAIL

The Authority — Hill International Consultant — Main Contractor — Structural Designer

KEY PLAN:

SCALE	SHOP DRAWING	DATE
AS SHOWN		12/05/2023

REV	DATE	DSN	CHK	APP	AMENDMENTS DESCRIPTION	STATUS
B	12/05/2023	M.KH	M.KH	DR.M.M	ISSUED FOR INFORMATION	IFI

DRAWING TITLE

6TH OF OCTOBER MONORAIL
SERVICE WALKWAYS
ZONE (1008)
Z8-HR086

Project Code	Rubric	Initiator	Lot	Ref	Number	Revision
93M	0476	ACC	600	DEP	DWG	08416	B

Tekla structures

approval is subject to approval of coordination package between multi-discipline

REVIEWED WITH COMMENT
MONORAILS PROJECT

All holes are 22mm U.N.O Length & Area & Weight per piece						
Z8-HR085	CHS48.3*4.0	S235JR	1	3892.9	0.58	17.0
Mark	Profile	Grade	QTY	Length	Area	Weight

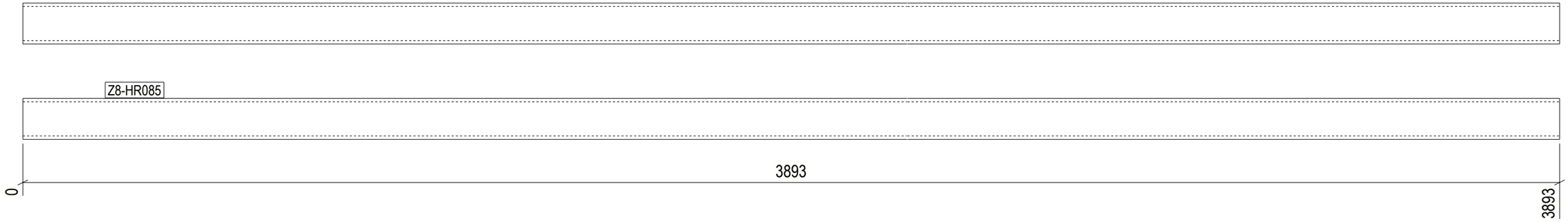

1 REQ'D AS DRAWN MK'D Z8-HR085

6 October Monorail
Engineering Unit
Valid For Construction

GENERAL NOTES:

1. THE DIMENSIONS SHOWN ARE NOMINAL (IN MILLIMETERS), U.N.O.
2. WELD SIZESHALL BE AISC MINIMUM OF 6 mm UNLESS NOTED OTHERWISE.
3. ALL FIELD WELDS SHALL BE INSPECTED PER QUALITY ASSURANCE AND SPECIAL INSPECTIONS.

REFERENCE DRAWINGS

1	93M-BOA-NAT-LOT-04833
2	93M-BOA-NAT-LOT-09170
3	93M-BOA-NAT-LOT-01976
4	93M-BOA-NAT-LOT-20021
5	
6	
7	
8	
9	

6TH OF OCTOBER CITY RAIL TRANSIT MONORAIL

The Authority — Hill International Consultant — Main Contractor — Structural Designer

KEY PLAN:

SCALE: AS SHOWN | SHOP DRAWING | DATE: 12/05/2023

REV	DATE	DSN	CHK	APP	AMENDMENTS DESCRIPTION	STATUS
B	12/05/2023	M.KH	M.KH	DR.M.M	ISSUED FOR INFORMATION	IFI

DRAWING TITLE

6TH OF OCTOBER MONORAIL
SERVICE WALKWAYS
ZONE (1008)
Z8-HR085

Project Code	Rubric	Initiator	Lot	Ref	Number	Revision
93M	0476	ACC	600	DEP	DWG	08417	B

Tekla structures

approval is subject to approval of coordination package between multi-discipline

REVIEWED WITH COMMENT
MONORAILS PROJECT

All holes are 22mm U.N.O Length & Area & Weight per piece

Mark	Profile	Grade	QTY	Length	Area	Weight
Z8-HR084	CHS48.3*4.0	S235JR	1	3694.8	0.55	16.2

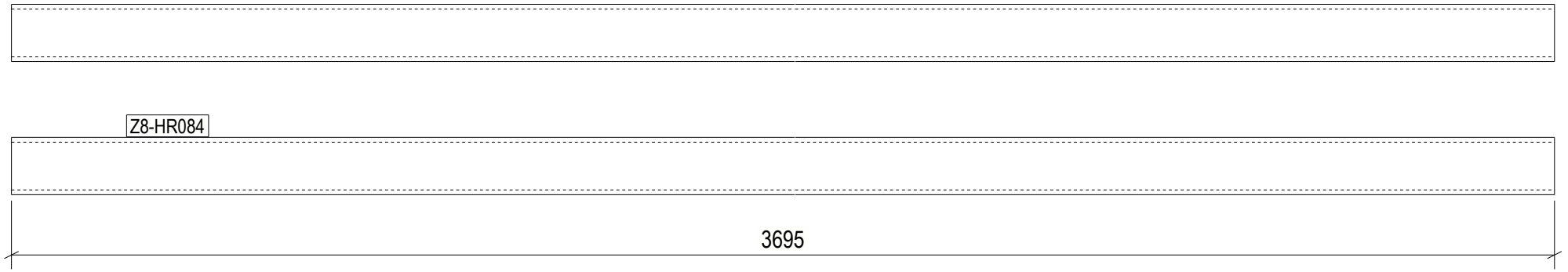

1 REQ'D AS DRAWN MK'D Z8-HR084

6 October Monorail
Engineering Unit
Valid For Construction

GENERAL NOTES:

1. THE DIMENSIONS SHOWN ARE NOMINAL (IN MILLIMETERS), U.N.O.
2. WELD SIZESHALL BE AISC MINIMUM OF 6 mm UNLESS NOTED OTHERWISE.
3. ALL FIELD WELDS SHALL BE INSPECTED PER QUALITY ASSURANCE AND SPECIAL INSPECTIONS.

REFERENCE DRAWINGS

1	93M-BOA-NAT-LOT-04833
2	93M-BOA-NAT-LOT-09170
3	93M-BOA-NAT-LOT-01976
4	93M-BOA-NAT-LOT-20021
5	
6	
7	
8	
9	

6TH OF OCTOBER CITY RAIL TRANSIT MONORAIL

The Authority — Hill International Consultant — Main Contractor — Structural Designer

KEY PLAN:

REV	DATE	DSG	CHK	APP	AMENDMENTS	STATUS
B	12/05/2023	M.KH	M.KH	DR.M.M	ISSUED FOR INFORMATION	IFI
A	11/20/2022	M.KH	M.KH	DR.M.M	ISSUED FOR INFORMATION	IFI

SCALE: AS SHOWN | SHOPDRAWING | DATE: 12/05/2023

DRAWING TITLE
6TH OF OCTOBER MONORAIL
SERVICE WALKWAYS
ZONE (1008)
Z8-HR084

Project Code	Rubric	Initiator	Lot	Ref	Number	Revision
93M	047	6ACC	60DE	PDWG	0841	B

Tekla structures

approval is subject to approval of coordination package between multi-discipline

REVIEWED WITH COMMENT
MONORAILS PROJECT

All holes are 22mm U.N.O Length & Area & Weight per piece

Mark	Profile	Grade	QTY	Length	Area	Weight
Z8-HR083	CHS48.3*4.0	S235JR	1	3947.8	0.59	17.3

Z8-HR083

3948

1 REQ'D AS DRAWN MK'D Z8-HR083

6 October Monorail
Engineering Unit
Valid For Construction

GENERAL NOTES:

1. THE DIMENSIONS SHOWN ARE NOMINAL (IN MILLIMETERS), U.N.O.
2. WELD SIZESHALL BE AISC MINIMUM OF 6 mm UNLESS NOTED OTHERWISE.
3. ALL FIELD WELDS SHALL BE INSPECTED PER QUALITY ASSURANCE AND SPECIAL INSPECTIONS.

REFERENCE DRAWINGS

1	93M-BOA-NAT-LOT-04833
2	93M-BOA-NAT-LOT-09170
3	93M-BOA-NAT-LOT-01976
4	93M-BOA-NAT-LOT-20021
5	
6	
7	
8	
9	

6TH OF OCTOBER CITY RAIL TRANSIT MONORAIL

The Authority — Hill International Consultant — Main Contractor — Structural Designer

KEY PLAN:

SCALE: AS SHOWN

SHOP DRAWING

DATE: 12/05/2023

REV	DATE	DSN	CHK	APP	AMENDMENTS DESCRIPTION	STATUS
B	12/05/2023	M.KH	M.KH	DR.M.M	ISSUED FOR INFORMATION	IFI

DRAWING TITLE

6TH OF OCTOBER MONORAIL
SERVICE WALKWAYS
ZONE (1008)
Z8-HR083

Project Code	Rubric	Initiator	Lot	Ref	Number	Revision
93M	047	6ACC	60DE	P	DWG	0841	B

Tekla structures

approval is subject to approval of coordination package between multi-discipline

REVIEWED WITH COMMENT
MONORAILS PROJECT

All holes are 22mm U.N.O Length & Area & Weight per piece

Mark	Profile	Grade	QTY	Length	Area	Weight
Z8-HR082	CHS48.3*4.0	S235JR	1	3947.8	0.59	17.3

Z8-HR082

3948

1 REQ'D AS DRAWN MK'D Z8-HR082

6 October Monorail
Engineering Unit
Valid For Construction

GENERAL NOTES:

1. THE DIMENSIONS SHOWN ARE NOMINAL (IN MILLIMETERS), U.N.O.
2. WELD SIZESHALL BE AISC MINIMUM OF 6 mm UNLESS NOTED OTHERWISE.
3. ALL FIELD WELDS SHALL BE INSPECTED PER QUALITY ASSURANCE AND SPECIAL INSPECTIONS.

REFERENCE DRAWINGS

1	93M-BOA-NAT-LOT-04833
2	93M-BOA-NAT-LOT-09170
3	93M-BOA-NAT-LOT-01976
4	93M-BOA-NAT-LOT-20021
5	
6	
7	
8	
9	

6TH OF OCTOBER CITY RAIL TRANSIT MONORAIL

The Authority — Hill International Consultant — Main Contractor — Structural Designer

KEY PLAN:

SCALE: AS SHOWN | SHOP DRAWING | DATE: 12/05/2023

REV	DATE	DSN	CHK	APP	AMENDMENTS/DESCRIPTION	STATUS
B	12/05/2023	M.KH	M.KH	DR.M.M	ISSUED FOR INFORMATION	IFI

DRAWING TITLE

6TH OF OCTOBER MONORAIL
SERVICE WALKWAYS
ZONE (1008)
Z8-HR082

Project Code	Rubric	Initiator	Lot	Ref	Number	Revision
93M	047	6ACC	60DE	P	DWG	0842	0	B

Tekla structures

approval is subject to approval of coordination package between multi-discipline

REVIEWED WITH COMMENT
MONORAILS PROJECT

All holes are 22mm U.N.O Length & Area & Weight per piece

Mark	Profile	Grade	QTY	Length	Area	Weight
Z8-HR081	CHS48.3*4.0	S235JR	1	3914.4	0.59	17.1

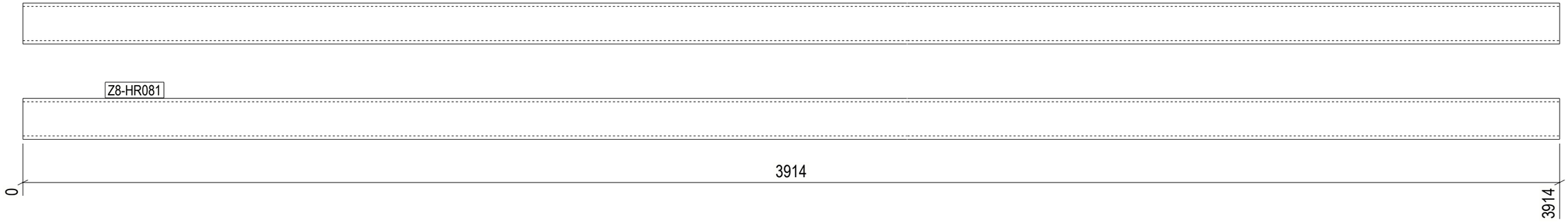

1 REQ'D AS DRAWN MK'D Z8-HR081

6 October Monorail
Engineering Unit
Valid For Construction

GENERAL NOTES:

1. THE DIMENSIONS SHOWN ARE NOMINAL (IN MILLIMETERS), U.N.O.
2. WELD SIZESHALL BE AISC MINIMUM OF 6 mm UNLESS NOTED OTHERWISE.
3. ALL FIELD WELDS SHALL BE INSPECTED PER QUALITY ASSURANCE AND SPECIAL INSPECTIONS.

REFERENCE DRAWINGS

1	93M-BOA-NAT-LOT-04833
2	93M-BOA-NAT-LOT-09170
3	93M-BOA-NAT-LOT-01976
4	93M-BOA-NAT-LOT-20021
5	
6	
7	
8	
9	

6TH OF OCTOBER CITY RAIL TRANSIT MONORAIL

The Authority — Hill International Consultant — Main Contractor — Structural Designer

KEY PLAN:

SCALE: AS SHOWN | SHOP DRAWING | DATE: 12/05/2023

REV	DATE	DSN	CHK	APP	AMENDMENTS/DESCRIPTION	STATUS
B	12/05/2023	M.KH	M.KH	DR.M.M	ISSUED FOR INFORMATION	IFI

DRAWING TITLE

6TH OF OCTOBER MONORAIL
SERVICE WALKWAYS
ZONE (1008)
Z8-HR081

Project Code	Rubric	Initiator	Lot	Ref	Number	Revision
93M	0476	ACC	600	DEP	DWG	08421	B

Tekla structures

approval is subject to approval of coordination package between multi-discipline

REVIEWED WITH COMMENT
MONORAILS PROJECT

All holes are 22mm U.N.O Length & Area & Weight per piece						
Z8-HR080	CHS48.3*4.0	S235JR	1	3914.4	0.59	17.1
Mark	Profile	Grade	QTY	Length	Area	Weight

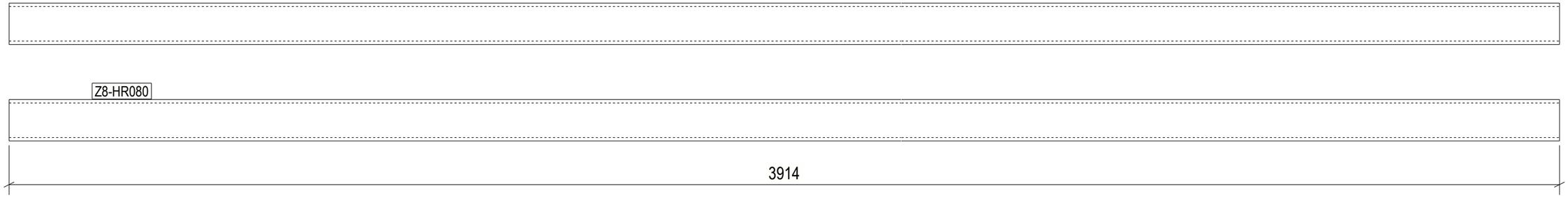

1 REQ'D AS DRAWN MK'D Z8-HR080

GENERAL NOTES:

1. THE DIMENSIONS SHOWN ARE NOMINAL (IN MILLIMETERS), U.N.O.
2. WELD SIZESHALL BE AISC MINIMUM OF 6 mm UNLESS NOTED OTHERWISE.
3. ALL FIELD WELDS SHALL BE INSPECTED PER QUALITY ASSURANCE AND SPECIAL INSPECTIONS.

REFERENCE DRAWINGS

1	93M-BOA-NAT-LOT-04833
2	93M-BOA-NAT-LOT-09170
3	93M-BOA-NAT-LOT-01976
4	93M-BOA-NAT-LOT-20021
5	
6	
7	
8	
9	

6TH OF OCTOBER CITY RAIL TRANSIT MONORAIL

The Authority | Hill International Consultant | Main Contractor | Structural Designer

KEY PLAN:

6 October Monorail
Engineering Unit
Valid For Construction

SCALE	SHOP DRAWING	DATE
AS SHOWN		12/05/2023

REV	DATE	DSN	CHK	APP	AMENDMENTS DESCRIPTION	STATUS
B	12/05/2023	M.KH	M.KH	DR.M.M	ISSUED FOR INFORMATION	IFI

DRAWING TITLE

6TH OF OCTOBER MONORAIL
SERVICE WALKWAYS
ZONE (1008)
Z8-HR080

Project Code	Rubric	Initiator	Lot	Ref	Number	Revision
93M	0476	ACC	600	DEP	DWG	08422	B

Tekla structures

All holes are 22mm U.N.O Length & Area & Weight per piece

Mark	Profile	Grade	QTY	Length	Area	Weight
Z8-HR079	CHS48.3*4.0	S235JR	1	3632.9	0.54	15.9

approval is subject to approval of coordination package between multi-discipline

REVIEWED WITH COMMENT MONORAILS PROJECT

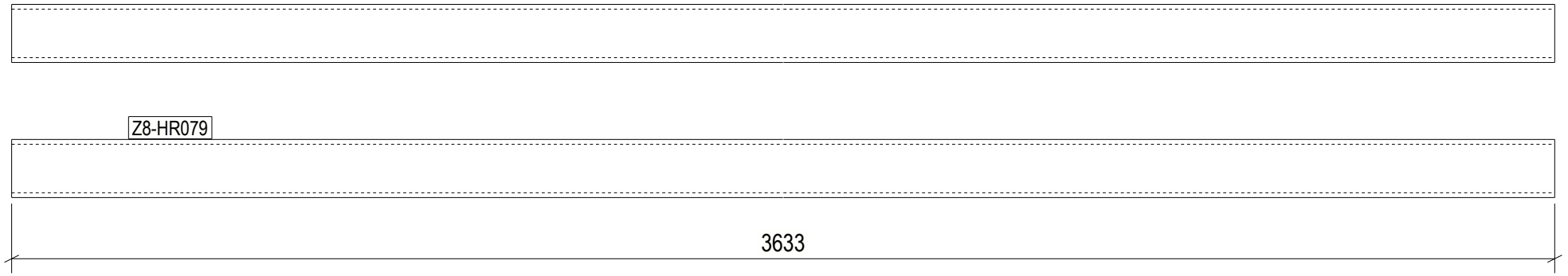

1 REQ'D AS DRAWN MK'D Z8-HR079

6 October Monorail Engineering Unit Valid For Construction

GENERAL NOTES:

1. THE DIMENSIONS SHOWN ARE NOMINAL (IN MILLIMETERS), U.N.O.
2. WELD SIZESHALL BE AISC MINIMUM OF 6 mm UNLESS NOTED OTHERWISE.
3. ALL FIELD WELDS SHALL BE INSPECTED PER QUALITY ASSURANCE AND SPECIAL INSPECTIONS.

REFERENCE DRAWINGS

1	93M-BOA-NAT-LOT-04833
2	93M-BOA-NAT-LOT-09170
3	93M-BOA-NAT-LOT-01976
4	93M-BOA-NAT-LOT-20021
5	
6	
7	
8	
9	

6TH OF OCTOBER CITY RAIL TRANSIT MONORAIL

The Authority | Hill International Consultant | Main Contractor | Structural Designer

KEY PLAN:

REV.	DATE	DSG	CHK	APP	AMENDMENTS	STATUS
B	12/05/2023	M.KH	M.KH	DR.M.M	ISSUED FOR INFORMATION	IFI
A	11/20/2022	M.KH	M.KH	DR.M.M	ISSUED FOR INFORMATION	IFI

SCALE: AS SHOWN | SHOPDRAWING | DATE: 12/05/2023

DRAWING TITLE

6TH OF OCTOBER MONORAIL SERVICE WALKWAYS ZONE (1008) Z8-HR079

Project Code	Rubric	Initiator	Lot	Ref	Number	Revision
9 3 M	0 4 7 6	A C C	6 0 D E P	D W G	0 8 4 2 3	B

Tekla structures

approval is subject to approval of coordination package between multi-discipline

REVIEWED WITH COMMENT
MONORAILS PROJECT

All holes are 22mm U.N.O Length & Area & Weight per piece

Mark	Profile	Grade	QTY	Length	Area	Weight
Z8-HR078	CHS48.3*4.0	S235JR	1	5719.5	0.86	25.0

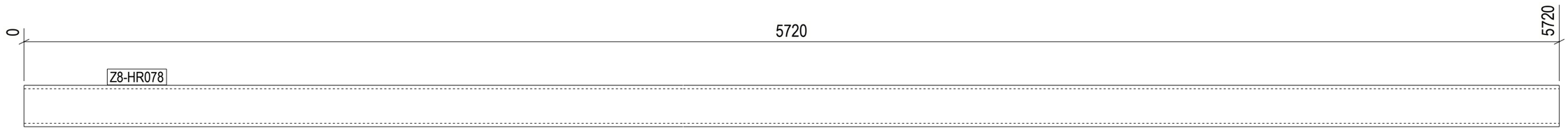

1 REQ'D AS DRAWN MK'D Z8-HR078

GENERAL NOTES:

1. THE DIMENSIONS SHOWN ARE NOMINAL (IN MILLIMETERS), U.N.O.
2. WELD SIZESHALL BE AISC MINIMUM OF 6 mm UNLESS NOTED OTHERWISE.
3. ALL FIELD WELDS SHALL BE INSPECTED PER QUALITY ASSURANCE AND SPECIAL INSPECTIONS.

REFERENCE DRAWINGS

1	93M-BOA-NAT-LOT-04833
2	93M-BOA-NAT-LOT-09170
3	93M-BOA-NAT-LOT-01976
4	93M-BOA-NAT-LOT-20021
5	
6	
7	
8	
9	

6TH OF OCTOBER CITY RAIL TRANSIT MONORAIL

The Authority | Hill International Consultant | Main Contractor | Structural Designer

KEY PLAN:

6 October Monorail Engineering Unit Valid For Construction

SCALE	SHOP DRAWING	DATE
AS SHOWN		12/05/2023

REV	DATE	DSN	CHK	APP	AMENDMENTS/REVISION	STATUS
B	12/05/2023	M.KH	M.KH	DR.M.M	ISSUED FOR INFORMATION	IFI

DRAWING TITLE

6TH OF OCTOBER MONORAIL SERVICE WALKWAYS ZONE (1008) Z8-HR078

Project Code	Rubric	Initiator	Lot	Ref	Number	Revision
93M	0476	ACC	600	DEP	DWG	08424	B

Tekla structures

approval is subject to approval of coordination package between multi-discipline

REVIEWED WITH COMMENT
MONORAILS PROJECT

All holes are 22mm U.N.O Length & Area & Weight per piece

Mark	Profile	Grade	QTY	Length	Area	Weight
Z8-HR077	CHS48.3*4.0	S235JR	1	5596.0	0.84	24.5

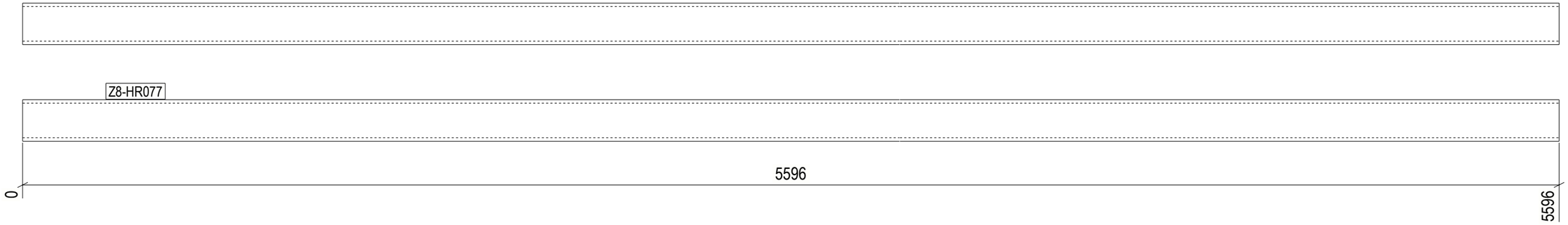

1 REQ'D AS DRAWN MK'D Z8-HR077

6 October Monorail
Engineering Unit
Valid For Construction

GENERAL NOTES:

1. THE DIMENSIONS SHOWN ARE NOMINAL (IN MILLIMETERS), U.N.O.
2. WELD SIZESHALL BE AISC MINIMUM OF 6 mm UNLESS NOTED OTHERWISE.
3. ALL FIELD WELDS SHALL BE INSPECTED PER QUALITY ASSURANCE AND SPECIAL INSPECTIONS.

REFERENCE DRAWINGS

1	93M-BOA-NAT-LOT-04833
2	93M-BOA-NAT-LOT-09170
3	93M-BOA-NAT-LOT-01976
4	93M-BOA-NAT-LOT-20021
5	
6	
7	
8	
9	

6TH OF OCTOBER CITY RAIL TRANSIT MONORAIL

The Authority — Hill International Consultant — Main Contractor — Structural Designer

KEY PLAN:

SCALE	SHOP DRAWING	DATE
AS SHOWN		12/05/2023

REV	DATE	DSN	CHK	APP	AMENDMENTS/DESCRIPTION	STATUS
B	12/05/2023	M.KH	M.KH	DR.M.M	ISSUED FOR INFORMATION	IFI

DRAWING TITLE

6TH OF OCTOBER MONORAIL
SERVICE WALKWAYS
ZONE (1008)
Z8-HR077

Project Code	Rubric	Initiator	Lot	Ref	Number	Revision
93M	047	6ACC	60DE	P	DWG	08425	B

Tekla structures

approval is subject to approval of coordination package between multi-discipline

REVIEWED WITH COMMENT
MONORAILS PROJECT

All holes are 22mm U.N.O Length & Area & Weight per piece

Mark	Profile	Grade	QTY	Length	Area	Weight
Z8-HR076	CHS48.3*4.0	S235JR	1	1750.8	0.26	7.7

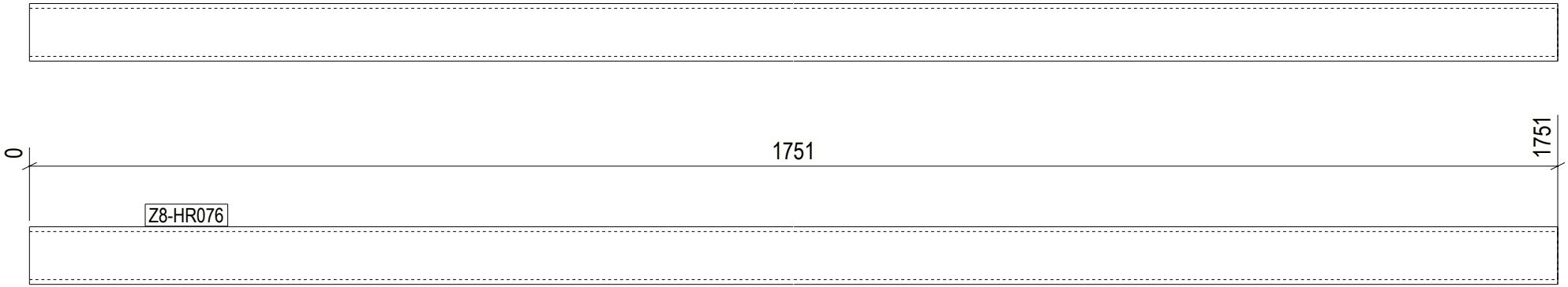

1 REQ'D AS DRAWN MK'D Z8-HR076

6 October Monorail
Engineering Unit
Valid For Construction

GENERAL NOTES:

1. THE DIMENSIONS SHOWN ARE NOMINAL (IN MILLIMETERS), U.N.O.
2. WELD SIZESHALL BE AISC MINIMUM OF 6 mm UNLESS NOTED OTHERWISE.
3. ALL FIELD WELDS SHALL BE INSPECTED PER QUALITY ASSURANCE AND SPECIAL INSPECTIONS.

REFERENCE DRAWINGS

1	93M-BOA-NAT-LOT-04833
2	93M-BOA-NAT-LOT-09170
3	93M-BOA-NAT-LOT-01976
4	93M-BOA-NAT-LOT-20021
5	
6	
7	
8	
9	

6TH OF OCTOBER CITY RAIL TRANSIT MONORAIL

The Authority — Hill International Consultant — Main Contractor — Structural Designer

KEY PLAN:

REV.	DATE	DSG	CHK	APP	AMENDMENTS	STATUS
B	12/05/2023	M.KH	M.KH	DR.M.M	ISSUED FOR INFORMATION	IFI
A	11/20/2022	M.KH	M.KH	DR.M.M	ISSUED FOR INFORMATION	IFI

SCALE: AS SHOWN | SHOPDRAWING | DATE: 12/05/2023

DRAWING TITLE
6TH OF OCTOBER MONORAIL
SERVICE WALKWAYS
ZONE (1008)
Z8-HR076

Project Code	Rubric	Initiator	Lot	Ref	Number	Revision
93M	047	6ACC	60DE	PDWG	0842	B

Tekla structures

approval is subject to approval of coordination package between multi-discipline

REVIEWED WITH COMMENT
MONORAILS PROJECT

All holes are 22mm U.N.O Length & Area & Weight per piece

Mark	Profile	Grade	QTY	Length	Area	Weight
Z8-HR075	CHS48.3*4.0	S235JR	1	1748.3	0.26	7.6

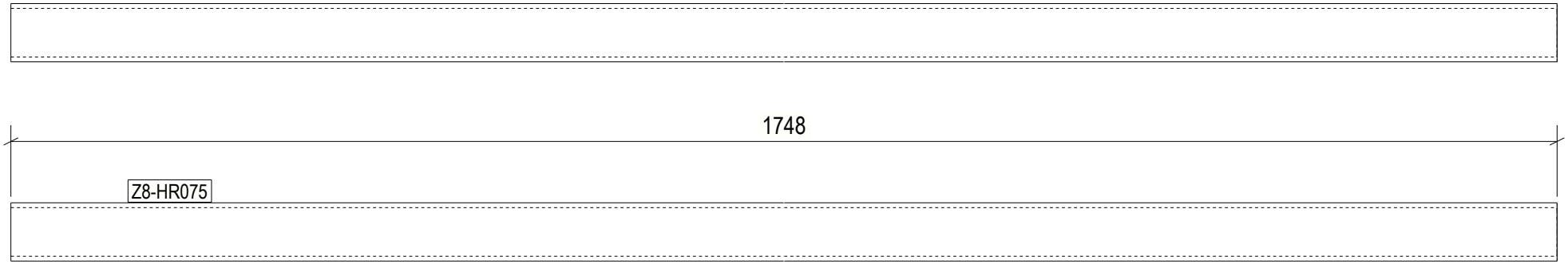

1 REQ'D AS DRAWN MK'D Z8-HR075

6 October Monorail
Engineering Unit
Valid For Construction

GENERAL NOTES:

1. THE DIMENSIONS SHOWN ARE NOMINAL (IN MILLIMETERS), U.N.O.
2. WELD SIZESHALL BE AISC MINIMUM OF 6 mm UNLESS NOTED OTHERWISE.
3. ALL FIELD WELDS SHALL BE INSPECTED PER QUALITY ASSURANCE AND SPECIAL INSPECTIONS.

REFERENCE DRAWINGS

1	93M-BOA-NAT-LOT-04833
2	93M-BOA-NAT-LOT-09170
3	93M-BOA-NAT-LOT-01976
4	93M-BOA-NAT-LOT-20021
5	
6	
7	
8	
9	

6TH OF OCTOBER CITY RAIL TRANSIT MONORAIL

The Authority — Hill International Consultant — Main Contractor — Structural Designer

KEY PLAN:

SCALE	SHOPDRAWING	DATE
AS SHOWN		12/09/2023

REV	DATE	DSG	CHK	APP	AMENDMENTS	STATUS
B	12/05/2023	M.KH	M.KH	DR.M.M	ISSUED FOR INFORMATION	IFI
A	11/20/2022	M.KH	M.KH	DR.M.M	ISSUED FOR INFORMATION	IFI

DRAWING TITLE

6TH OF OCTOBER MONORAIL
SERVICE WALKWAYS
ZONE (1008)
Z8-HR075

Project Code	Rubric	Initiator	Lot	Ref	Number	Revision
9 3 M	0 4 7 6	A C C	6 0 D E	P D W	G 0 8 4 2 7	B

Tekla structures

approval is subject to approval of coordination package between multi-discipline

REVIEWED WITH COMMENT
MONORAILS PROJECT

All holes are 22mm U.N.O Length & Area & Weight per piece

Mark	Profile	Grade	QTY	Length	Area	Weight
Z8-HR074	CHS48.3*4.0	S235JR	1	1185.4	0.18	5.2

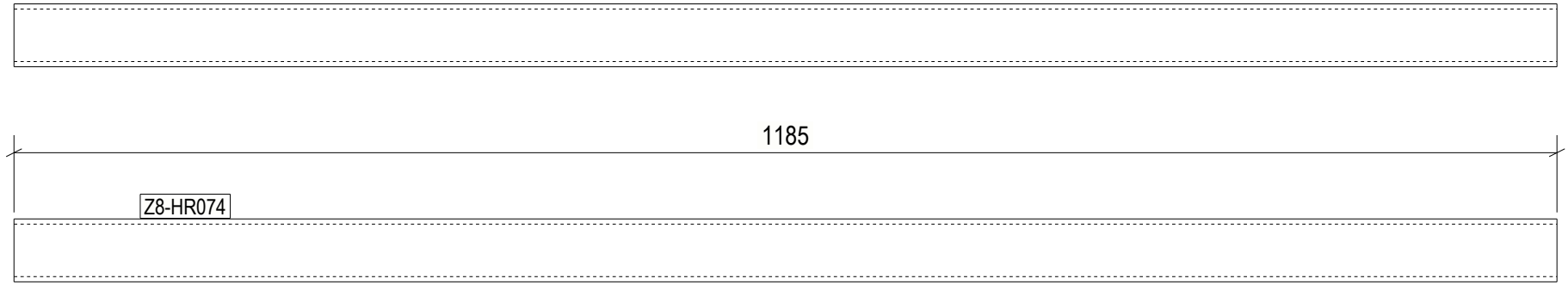

1 REQ'D AS DRAWN MK'D Z8-HR074

6 October Monorail
Engineering Unit
Valid For Construction

GENERAL NOTES:

1. THE DIMENSIONS SHOWN ARE NOMINAL (IN MILLIMETERS), U.N.O.
2. WELD SIZESHALL BE AISC MINIMUM OF 6 mm UNLESS NOTED OTHERWISE.
3. ALL FIELD WELDS SHALL BE INSPECTED PER QUALITY ASSURANCE AND SPECIAL INSPECTIONS.

REFERENCE DRAWINGS

1	93M-BOA-NAT-LOT-04833
2	93M-BOA-NAT-LOT-09170
3	93M-BOA-NAT-LOT-01976
4	93M-BOA-NAT-LOT-20021
5	
6	
7	
8	
9	

6TH OF OCTOBER CITY RAIL TRANSIT MONORAIL

The Authority — Hill International Consultant — Main Contractor — Structural Designer

KEY PLAN:

SCALE	SHOPDRAWING	DATE
AS SHOWN		12/09/2023

REV	DATE	DSG	CHK	APP	AMENDMENTS	STATUS
B	12/05/2023	M.KH	M.KH	DR.M.M	ISSUED FOR INFORMATION	IFI
A	11/20/2022	M.KH	M.KH	DR.M.M	ISSUED FOR INFORMATION	IFI

DRAWING TITLE

6TH OF OCTOBER MONORAIL
SERVICE WALKWAYS
ZONE (1008)
Z8-HR074

Project Code	Rubric	Initiator	Lot	Ref	Number	Revision
9 3 M	0 4 7 6	A C C	6 0 D E P	D W G	0 8 4 2 8	B

Tekla structures

approval is subject to approval of coordination package between multi-discipline

REVIEWED WITH COMMENT MONORAILS PROJECT

All holes are 22mm U.N.O Length & Area & Weight per piece						
Z8-HR073	CHS48.3*4.0	S235JR	1	3730.2	0.56	16.3
Mark	Profile	Grade	QTY	Length	Area	Weight

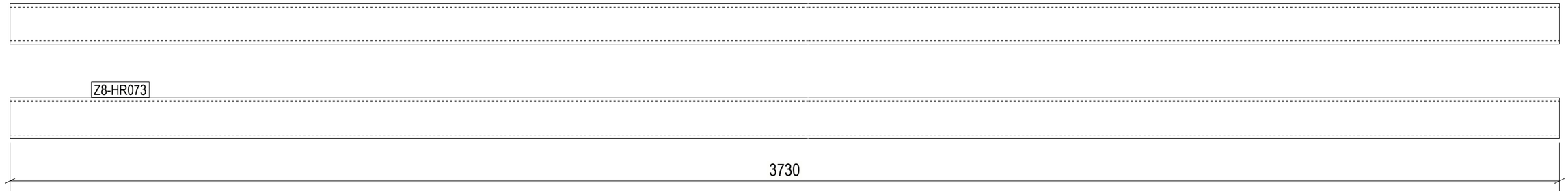

1 REQ'D AS DRAWN MK'D Z8-HR073

6 October Monorail Engineering Unit Valid For Construction

GENERAL NOTES:

1. THE DIMENSIONS SHOWN ARE NOMINAL (IN MILLIMETERS), U.N.O.
2. WELD SIZESHALL BE AISC MINIMUM OF 6 mm UNLESS NOTED OTHERWISE.
3. ALL FIELD WELDS SHALL BE INSPECTED PER QUALITY ASSURANCE AND SPECIAL INSPECTIONS.

REFERENCE DRAWINGS

1	93M-BOA-NAT-LOT-04833
2	93M-BOA-NAT-LOT-09170
3	93M-BOA-NAT-LOT-01976
4	93M-BOA-NAT-LOT-20021
5	
6	
7	
8	
9	

6TH OF OCTOBER CITY RAIL TRANSIT MONORAIL

The Authority | Hill International Consultant | ORASCOM BOMBARDIER Main Contractor | INNOVA Structural Designer

KEY PLAN:

SCALE	SHOP DRAWING	DATE
AS SHOWN		12/05/2023

REV	DATE	DSN	CHK	APP	AMENDMENTS	STATUS
B	12/05/2023	M.KH	M.KH	DR.M.M	ISSUED FOR INFORMATION	IFI
	11/04/2022					

DRAWING TITLE

6TH OF OCTOBER MONORAIL SERVICE WALKWAYS ZONE (1008)

Z8-HR073

Project Code	Rubric	Initiator	Lot	Ref	Number	Revision
93M	0476	ACC	60DEP	DWG	08429	B

Tekla structures

approval is subject to approval of coordination package between multi-discipline

REVIEWED WITH COMMENT
MONORAILS PROJECT

All holes are 22mm U.N.O Length & Area & Weight per piece

Mark	Profile	Grade	QTY	Length	Area	Weight
Z8-HR072	CHS48.3*4.0	S235JR	1	3858.4	0.58	16.9

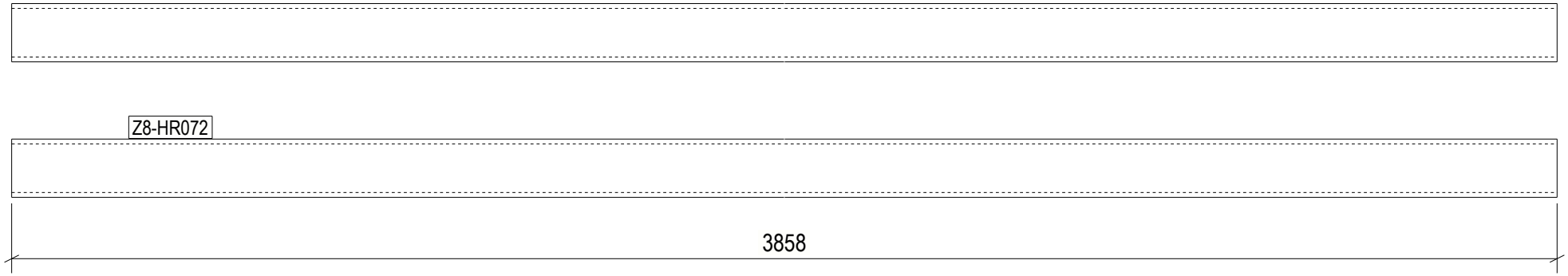

1 REQ'D AS DRAWN MK'D Z8-HR072

6 October Monorail
Engineering Unit
Valid For Construction

GENERAL NOTES:

1. THE DIMENSIONS SHOWN ARE NOMINAL (IN MILLIMETERS), U.N.O.
2. WELD SIZESHALL BE AISC MINIMUM OF 6 mm UNLESS NOTED OTHERWISE.
3. ALL FIELD WELDS SHALL BE INSPECTED PER QUALITY ASSURANCE AND SPECIAL INSPECTIONS.

REFERENCE DRAWINGS

1	93M-BOA-NAT-LOT-04833
2	93M-BOA-NAT-LOT-09170
3	93M-BOA-NAT-LOT-01976
4	93M-BOA-NAT-LOT-20021
5	
6	
7	
8	
9	

6TH OF OCTOBER CITY RAIL TRANSIT MONORAIL

The Authority | Hill International Consultant | Main Contractor | Structural Designer

KEY PLAN:

SCALE	SHOPDRAWING	DATE
AS SHOWN		12/09/2023

REV.	DATE	DSG.	CHK.	APP.	AMENDMENTS	STATUS
B	12/05/2023	M.KH	M.KH	DR.M.M	ISSUED FOR INFORMATION	IFI
A	11/20/2022	M.KH	M.KH	DR.M.M	ISSUED FOR INFORMATION	IFI

DRAWING TITLE

6TH OF OCTOBER MONORAIL
SERVICE WALKWAYS
ZONE (1008)
Z8-HR072

Project Code	Rubric	Initiator	Lot	Ref	Number	Revision
9 3 M	0 4 7 6	A C C	6 0 D E P	D W G	0 8 4 3 0	B

Tekla structures

approval is subject to approval of coordination package between multi-discipline

REVIEWED WITH COMMENT
MONORAILS PROJECT

All holes are 22mm U.N.O Length & Area & Weight per piece						
Z8-HR071	CHS48.3*4.0	S235JR	1	3883.5	0.58	17.0
Mark	Profile	Grade	QTY	Length	Area	Weight

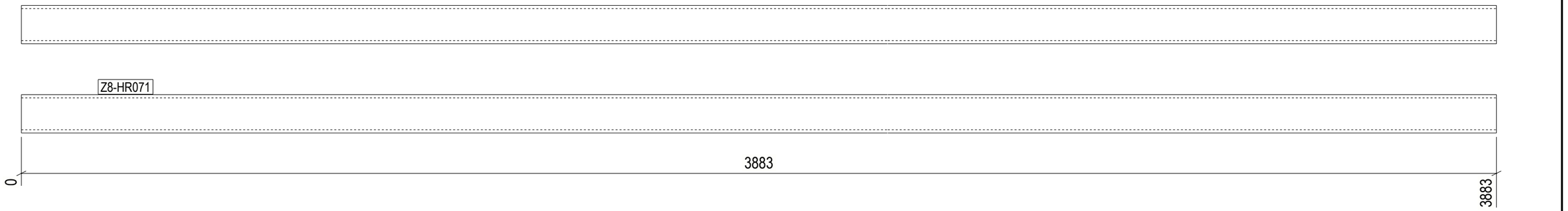

1 REQ'D AS DRAWN MK'D Z8-HR071

6 October Monorail
Engineering Unit
Valid For Construction

GENERAL NOTES:

1. THE DIMENSIONS SHOWN ARE NOMINAL (IN MILLIMETERS), U.N.O.
2. WELD SIZESHALL BE AISC MINIMUM OF 6 mm UNLESS NOTED OTHERWISE.
3. ALL FIELD WELDS SHALL BE INSPECTED PER QUALITY ASSURANCE AND SPECIAL INSPECTIONS.

REFERENCE DRAWINGS

1	93M-BOA-NAT-LOT-04833
2	93M-BOA-NAT-LOT-09170
3	93M-BOA-NAT-LOT-01976
4	93M-BOA-NAT-LOT-20021
5	
6	
7	
8	
9	

6TH OF OCTOBER CITY RAIL TRANSIT MONORAIL

The Authority — Hill International Consultant — Main Contractor — Structural Designer

KEY PLAN:

SCALE	SHOP DRAWING	DATE
AS SHOWN		12/05/2023

REV	DATE	DSN	CHK	APP	AMENDMENTS DESCRIPTION	STATUS
B	12/05/2023	M.KH	M.KH	DR.M.M	ISSUED FOR INFORMATION	IFI

DRAWING TITLE

6TH OF OCTOBER MONORAIL
SERVICE WALKWAYS
ZONE (1008)
Z8-HR071

Project Code	Rubric	Initiator	Lot	Ref	Number	Revision
93M	0476	ACC	600	DEP	DWG	08431	B

Tekla structures

approval is subject to approval of coordination package between multi-discipline

REVIEWED WITH COMMENT
MONORAILS PROJECT

All holes are 22mm U.N.O Length & Area & Weight per piece						
Z8-HR070	CHS48.3*4.0	S235JR	1	3883.5	0.58	17.0
Mark	Profile	Grade	QTY	Length	Area	Weight

Z8-HR070

3883

1 REQ'D AS DRAWN MK'D Z8-HR070

6 October Monorail
Engineering Unit
Valid For Construction

GENERAL NOTES:

1. THE DIMENSIONS SHOWN ARE NOMINAL (IN MILLIMETERS), U.N.O.
2. WELD SIZESHALL BE AISC MINIMUM OF 6 mm UNLESS NOTED OTHERWISE.
3. ALL FIELD WELDS SHALL BE INSPECTED PER QUALITY ASSURANCE AND SPECIAL INSPECTIONS.

REFERENCE DRAWINGS

1	93M-BOA-NAT-LOT-04833
2	93M-BOA-NAT-LOT-09170
3	93M-BOA-NAT-LOT-01976
4	93M-BOA-NAT-LOT-20021
5	
6	
7	
8	
9	

6TH OF OCTOBER CITY RAIL TRANSIT MONORAIL

The Authority — Hill International Consultant — Main Contractor — Structural Designer

KEY PLAN:

SCALE	SHOP DRAWING	DATE
AS SHOWN		12/05/2023

REV	DATE	DSN	CHK	APP	AMENDMENTS DESCRIPTION	STATUS
B	12/05/2023	M.KH	M.KH	DR.M.M	ISSUED FOR INFORMATION	IFI

DRAWING TITLE

6TH OF OCTOBER MONORAIL
SERVICE WALKWAYS
ZONE (1008)
Z8-HR070

Project Code	Rubric	Initiator	Lot	Ref	Number	Revision
9 3 M	0 4 7 6	A C C	6 0 D E P	D W G	0 8 4 3 2	B

Tekla structures

approval is subject to approval of coordination package between multi-discipline

REVIEWED WITH COMMENT MONORAILS PROJECT

All holes are 22mm U.N.O Length & Area & Weight per piece						
Z8-HR069	CHS48.3*4.0	S235JR	1	3853.9	0.58	16.9
Mark	Profile	Grade	QTY	Length	Area	Weight

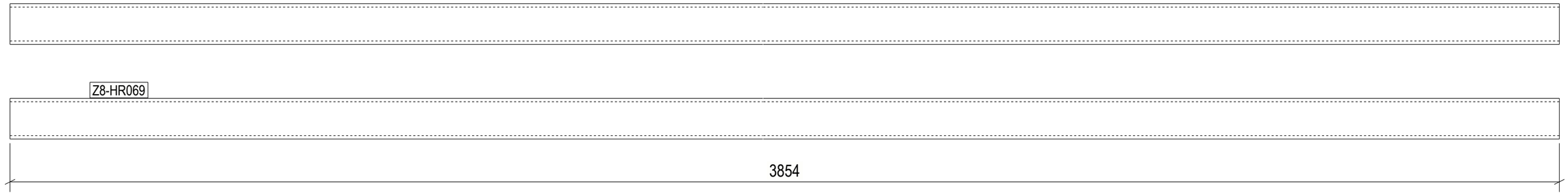

1 REQ'D AS DRAWN MK'D Z8-HR069

6 October Monorail Engineering Unit Valid For Construction

GENERAL NOTES:

1. THE DIMENSIONS SHOWN ARE NOMINAL (IN MILLIMETERS), U.N.O.
2. WELD SIZESHALL BE AISC MINIMUM OF 6 mm UNLESS NOTED OTHERWISE.
3. ALL FIELD WELDS SHALL BE INSPECTED PER QUALITY ASSURANCE AND SPECIAL INSPECTIONS.

REFERENCE DRAWINGS

1	93M-BOA-NAT-LOT-04833
2	93M-BOA-NAT-LOT-09170
3	93M-BOA-NAT-LOT-01976
4	93M-BOA-NAT-LOT-20021
5	
6	
7	
8	
9	

6TH OF OCTOBER CITY RAIL TRANSIT MONORAIL

The Authority | Hill International Consultant | ORASCOM BOMBARDIER Main Contractor | INNOVA Structural Designer

KEY PLAN:

SCALE	SHOP DRAWING	DATE
AS SHOWN		12/05/2023

REV	DATE	DSN	CHK	APP	AMENDMENTS	STATUS
B	12/05/2023	M.KH	M.KH	DR.M.M	ISSUED FOR INFORMATION	IFI

DRAWING TITLE

6TH OF OCTOBER MONORAIL SERVICE WALKWAYS ZONE (1008)

Z8-HR069

Project Code	Rubric	Initiator	Lot	Ref	Number	Revision
93M	0476	ACC	60DEP	DWG	08433	B

Tekla structures

approval is subject to approval of coordination package between multi-discipline

REVIEWED WITH COMMENT
MONORAILS PROJECT

All holes are 22mm U.N.O Length & Area & Weight per piece

Mark	Profile	Grade	QTY	Length	Area	Weight
Z8-HR068	CHS48.3*4.0	S235JR	1	3664.6	0.55	16.0

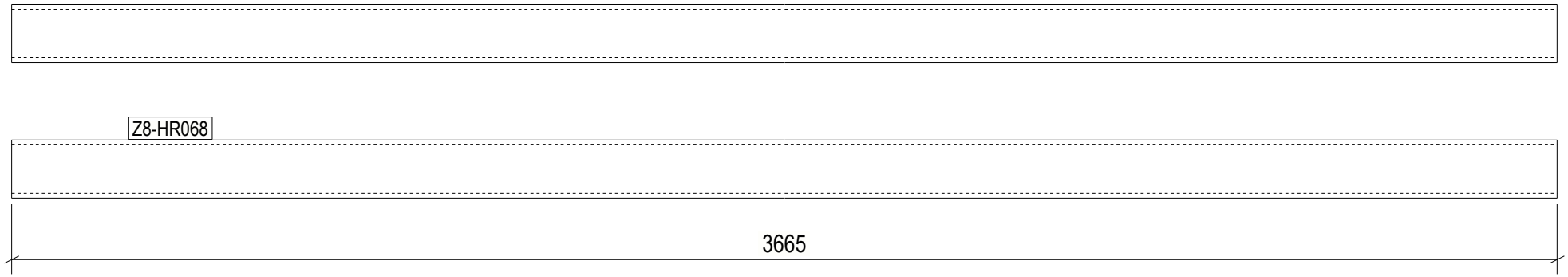

1 REQ'D AS DRAWN MK'D Z8-HR068

6 October Monorail
Engineering Unit
Valid For Construction

GENERAL NOTES:

1. THE DIMENSIONS SHOWN ARE NOMINAL (IN MILLIMETERS), U.N.O.
2. WELD SIZESHALL BE AISC MINIMUM OF 6 mm UNLESS NOTED OTHERWISE.
3. ALL FIELD WELDS SHALL BE INSPECTED PER QUALITY ASSURANCE AND SPECIAL INSPECTIONS.

REFERENCE DRAWINGS

1	93M-BOA-NAT-LOT-04833
2	93M-BOA-NAT-LOT-09170
3	93M-BOA-NAT-LOT-01976
4	93M-BOA-NAT-LOT-20021
5	
6	
7	
8	
9	

6TH OF OCTOBER CITY RAIL TRANSIT MONORAIL

The Authority — Hill International Consultant — Main Contractor — Structural Designer

KEY PLAN:

REV.	DATE	DSG	CHK	APP	AMENDMENTS	STATUS
B	12/05/2023	M.KH	M.KH	DR.M.M	ISSUED FOR INFORMATION	IFI
A	11/20/2022	M.KH	M.KH	DR.M.M	ISSUED FOR INFORMATION	IFI

SCALE: AS SHOWN | SHOPDRAWING | DATE: 12/05/2023

DRAWING TITLE
6TH OF OCTOBER MONORAIL
SERVICE WALKWAYS
ZONE (1008)
Z8-HR068

Project Code	Rubric	Initiator	Lot	Ref	Number	Revision
9 3 M	0 4 7 6	A C C	6 0 D E P	D W G	0 8 4 3 4	B

Tekla structures

approval is subject to approval of coordination package between multi-discipline

REVIEWED WITH COMMENT
MONORAILS PROJECT

All holes are 22mm U.N.O Length & Area & Weight per piece

Mark	Profile	Grade	QTY	Length	Area	Weight
Z8-HR067	CHS48.3*4.0	S235JR	1	4859.9	0.73	21.2

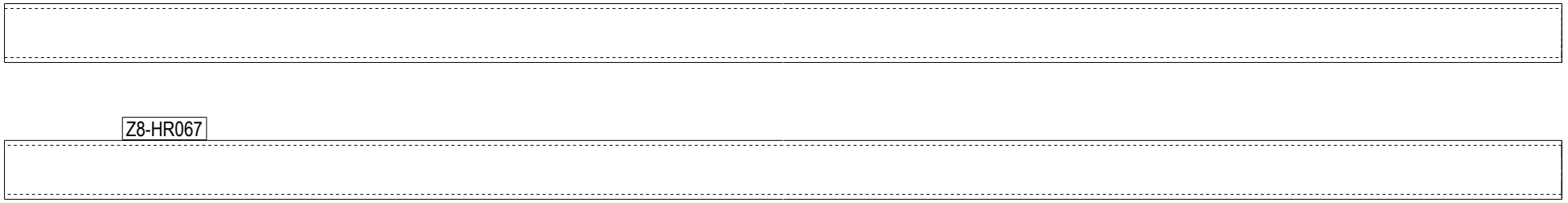

1 REQ'D AS DRAWN MK'D Z8-HR067

6 October Monorail
Engineering Unit
Valid For Construction

Tekla structures

GENERAL NOTES:

1. THE DIMENSIONS SHOWN ARE NOMINAL (IN MILLIMETERS), U.N.O.
2. WELD SIZESHALL BE AISC MINIMUM OF 6 mm UNLESS NOTED OTHERWISE.
3. ALL FIELD WELDS SHALL BE INSPECTED PER QUALITY ASSURANCE AND SPECIAL INSPECTIONS.

REFERENCE DRAWINGS

1	93M-BOA-NAT-LOT-04833
2	93M-BOA-NAT-LOT-09170
3	93M-BOA-NAT-LOT-01976
4	93M-BOA-NAT-LOT-20021
5	
6	
7	
8	
9	

6TH OF OCTOBER CITY RAIL TRANSIT MONORAIL

The Authority | Hill International Consultant | Main Contractor | Structural Designer

KEY PLAN:

REV.	DATE	DSG	CHK	APP	AMENDMENTS	STATUS
B	12/05/2023	M.KH	M.KH	DR.M.M	ISSUED FOR INFORMATION	IFI
A	11/20/2022	M.KH	M.KH	DR.M.M	ISSUED FOR INFORMATION	IFI

SCALE AS SHOWN | SHOPDRAWING | DATE 12/05/2023

DRAWING TITLE
6TH OF OCTOBER MONORAIL
SERVICE WALKWAYS
ZONE (1008)
Z8-HR067

Project Code	Rubric	Initiator	Lot	Ref	Number	Revision
9 3 M	0 4 7 6	A C C	6 0 D E P	D W G	0 8 4 3 5	B

approval is subject to approval of coordination package between multi-discipline

REVIEWED WITH COMMENT
MONORAILS PROJECT

All holes are 22mm U.N.O Length & Area & Weight per piece

Mark	Profile	Grade	QTY	Length	Area	Weight
Z8-HR066	CHS48.3*4.0	S235JR	1	4790.9	0.72	20.9

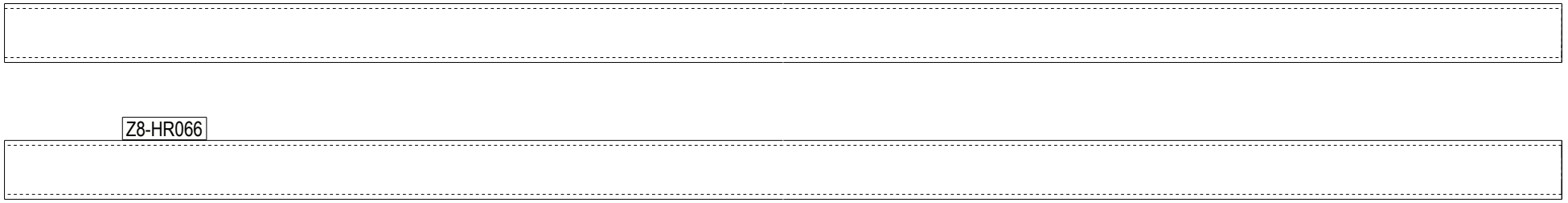

1 REQ'D AS DRAWN MK'D Z8-HR066

6 October Monorail
Engineering Unit
Valid For Construction

GENERAL NOTES:

1. THE DIMENSIONS SHOWN ARE NOMINAL (IN MILLIMETERS), U.N.O.
2. WELD SIZESHALL BE AISC MINIMUM OF 6 mm UNLESS NOTED OTHERWISE.
3. ALL FIELD WELDS SHALL BE INSPECTED PER QUALITY ASSURANCE AND SPECIAL INSPECTIONS.

REFERENCE DRAWINGS

1	93M-BOA-NAT-LOT-04833
2	93M-BOA-NAT-LOT-09170
3	93M-BOA-NAT-LOT-01976
4	93M-BOA-NAT-LOT-20021
5	
6	
7	
8	
9	

6TH OF OCTOBER CITY RAIL TRANSIT MONORAIL

The Authority — Hill International Consultant — Main Contractor — Structural Designer

KEY PLAN:

REV.	DATE	DSG	CHK	APP	AMENDMENTS	STATUS
B	12/05/2023	M.KH	M.KH	DR.M.M	ISSUED FOR INFORMATION	IFI
A	11/20/2022	M.KH	M.KH	DR.M.M	ISSUED FOR INFORMATION	IFI

SCALE: AS SHOWN | SHOPDRAWING | DATE: 12/05/2023

DRAWING TITLE

6TH OF OCTOBER MONORAIL
SERVICE WALKWAYS
ZONE (1008)
Z8-HR066

Project Code	Rubric	Initiator	Lot	Ref	Number	Revision
9 3 M	0 4 7 6	A C C	6 0 D E P	D W G	0 8 4 3 6	B

Tekla structures

approval is subject to approval of coordination package between multi-discipline

REVIEWED WITH COMMENT
MONORAILS PROJECT

All holes are 22mm U.N.O Length & Area & Weight per piece						
Z8-HR065	CHS48.3*4.0	S235JR	1	5696.7	0.85	24.9
Mark	Profile	Grade	QTY	Length	Area	Weight

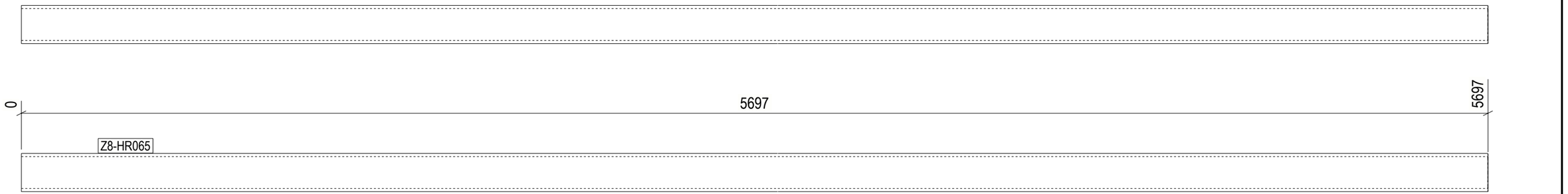

1 REQ'D AS DRAWN MK'D Z8-HR065

GENERAL NOTES:

1. THE DIMENSIONS SHOWN ARE NOMINAL (IN MILLIMETERS), U.N.O.
2. WELD SIZESHALL BE AISC MINIMUM OF 6 mm UNLESS NOTED OTHERWISE.
3. ALL FIELD WELDS SHALL BE INSPECTED PER QUALITY ASSURANCE AND SPECIAL INSPECTIONS.

REFERENCE DRAWINGS

1	93M-BOA-NAT-LOT-04833
2	93M-BOA-NAT-LOT-09170
3	93M-BOA-NAT-LOT-01976
4	93M-BOA-NAT-LOT-20021
5	
6	
7	
8	
9	

6TH OF OCTOBER CITY RAIL TRANSIT MONORAIL

The Authority | Hill International Consultant | Main Contractor | Structural Designer

KEY PLAN:

6 October Monorail
Engineering Unit
Valid For Construction

SCALE	SHOP DRAWING	DATE
AS SHOWN		12/05/2023

REV	DATE	DSN	CHK	APP	AMENDMENTS/REVISION	STATUS
B	12/05/2023	M.KH	M.KH	DR.M.M	ISSUED FOR INFORMATION	IFI

DRAWING TITLE

6TH OF OCTOBER MONORAIL
SERVICE WALKWAYS
ZONE (1008)
Z8-HR065

Project Code	Rubric	Initiator	Lot	Ref	Number	Revision
93M	0476	ACC	600	DEP	DWG	08437	B

Tekla structures

approval is subject to approval of coordination package between multi-discipline

REVIEWED WITH COMMENT MONORAILS PROJECT

All holes are 22mm U.N.O Length & Area & Weight per piece						
Z8-HR064	CHS48.3*4.0	S235JR	1	3691.7	0.55	16.1
Mark	Profile	Grade	QTY	Length	Area	Weight

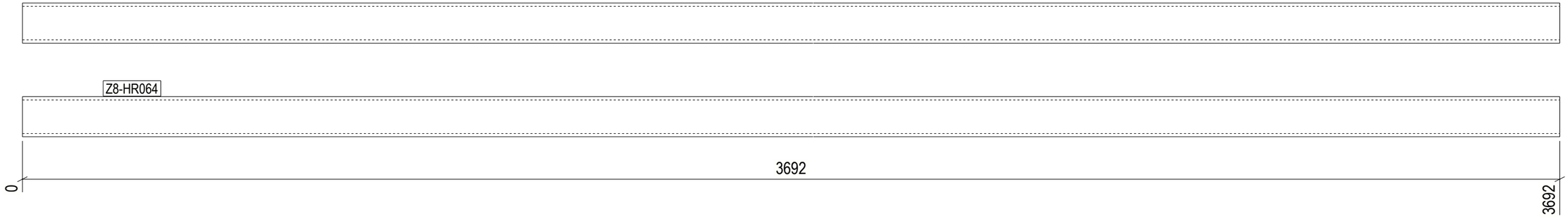

1 REQ'D AS DRAWN MK'D Z8-HR064

6 October Monorail Engineering Unit Valid For Construction

GENERAL NOTES:

1. THE DIMENSIONS SHOWN ARE NOMINAL (IN MILLIMETERS), U.N.O.
2. WELD SIZESHALL BE AISC MINIMUM OF 6 mm UNLESS NOTED OTHERWISE.
3. ALL FIELD WELDS SHALL BE INSPECTED PER QUALITY ASSURANCE AND SPECIAL INSPECTIONS.

REFERENCE DRAWINGS

1	93M-BOA-NAT-LOT-04833
2	93M-BOA-NAT-LOT-09170
3	93M-BOA-NAT-LOT-01976
4	93M-BOA-NAT-LOT-20021
5	
6	
7	
8	
9	

6TH OF OCTOBER CITY RAIL TRANSIT MONORAIL

The Authority | Hill International Consultant | ORASCOM BOMBARDIER Main Contractor | INNOVA Structural Designer

KEY PLAN:

SCALE	SHOP DRAWING	DATE
AS SHOWN		12/05/2023

REV	DATE	DSN	CHK	APP	AMENDMENTS	STATUS
B	12/05/2023	M.KH	M.KH	DR.M.M	ISSUED FOR INFORMATION	IFI

DRAWING TITLE

6TH OF OCTOBER MONORAIL SERVICE WALKWAYS ZONE (1008)
Z8-HR064

Project Code	Rubric	Initiator	Lot	Ref	Number	Revision
93M	0476	ACC	60DEP	DWG	08438	B

Tekla structures

All holes are 22mm U.N.O Length & Area & Weight per piece

Mark	Profile	Grade	QTY	Length	Area	Weight
Z8-HR063	CHS48.3*4.0	S235JR	2	1828.7	0.27	8.0

approval is subject to approval of coordination package between multi-discipline

REVIEWED WITH COMMENT
MONORAILS PROJECT

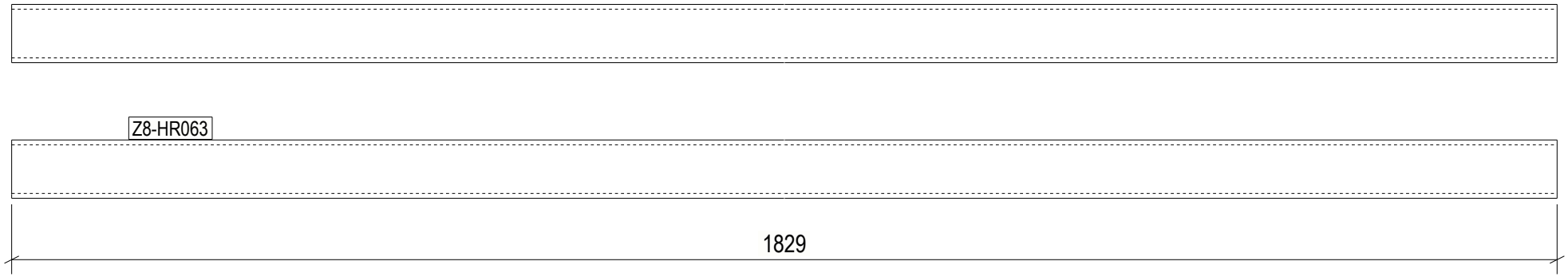

2 REQ'D AS DRAWN MK'D Z8-HR063

6 October Monorail
Engineering Unit
Valid For Construction

GENERAL NOTES:

1. THE DIMENSIONS SHOWN ARE NOMINAL (IN MILLIMETERS), U.N.O.
2. WELD SIZESHALL BE AISC MINIMUM OF 6 mm UNLESS NOTED OTHERWISE.
3. ALL FIELD WELDS SHALL BE INSPECTED PER QUALITY ASSURANCE AND SPECIAL INSPECTIONS.

REFERENCE DRAWINGS

1	93M-BOA-NAT-LOT-04833
2	93M-BOA-NAT-LOT-09170
3	93M-BOA-NAT-LOT-01976
4	93M-BOA-NAT-LOT-20021
5	
6	
7	
8	
9	

6TH OF OCTOBER CITY RAIL TRANSIT MONORAIL

The Authority — Hill International Consultant — Main Contractor — Structural Designer

KEY PLAN:

SCALE	SHOPDRAWING	DATE
AS SHOWN		12/09/2023

REV.	DATE	DSG.	CHK.	APP.	AMENDMENTS	STATUS
B	12/05/2023	M.KH	M.KH	DR.M.M	ISSUED FOR INFORMATION	IFI
A	11/20/2022	M.KH	M.KH	DR.M.M	ISSUED FOR INFORMATION	IFI

DRAWING TITLE

6TH OF OCTOBER MONORAIL
SERVICE WALKWAYS
ZONE (1008)
Z8-HR063

Project Code	Rubric	Initiator	Lot	Ref	Number	Revision
9 3 M	0 4 7 6	A C C	6 0 D E P	D W G	0 8 4 3 9	B

Tekla structures

approval is subject to approval of coordination package between multi-discipline

REVIEWED WITH COMMENT
MONORAILS PROJECT

All holes are 22mm U.N.O Length & Area & Weight per piece

Mark	Profile	Grade	QTY	Length	Area	Weight
Z8-HR062	CHS48.3*4.0	S235JR	1	1828.7	0.27	8.0

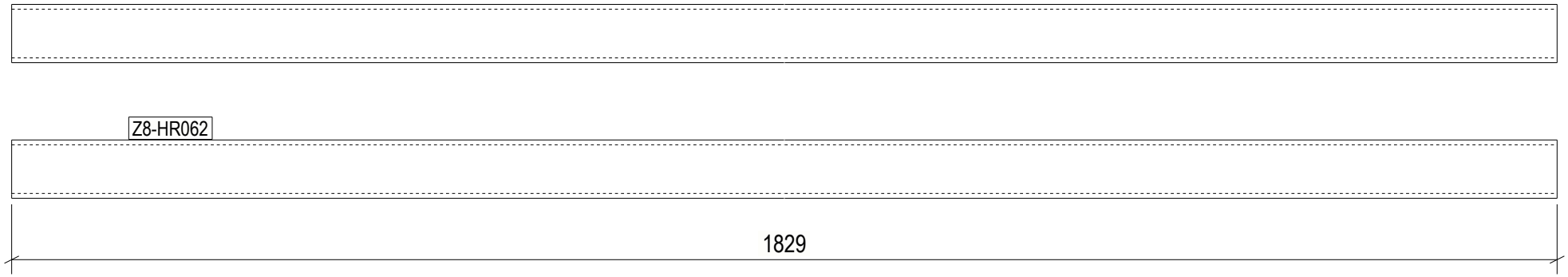

1 REQ'D AS DRAWN MK'D Z8-HR062

6 October Monorail
Engineering Unit
Valid For Construction

GENERAL NOTES:

1. THE DIMENSIONS SHOWN ARE NOMINAL (IN MILLIMETERS), U.N.O.
2. WELD SIZESHALL BE AISC MINIMUM OF 6 mm UNLESS NOTED OTHERWISE.
3. ALL FIELD WELDS SHALL BE INSPECTED PER QUALITY ASSURANCE AND SPECIAL INSPECTIONS.

REFERENCE DRAWINGS

1	93M-BOA-NAT-LOT-04833
2	93M-BOA-NAT-LOT-09170
3	93M-BOA-NAT-LOT-01976
4	93M-BOA-NAT-LOT-20021
5	
6	
7	
8	
9	

6TH OF OCTOBER CITY RAIL TRANSIT MONORAIL

The Authority | Hill International Consultant | Main Contractor | Structural Designer

KEY PLAN:

SCALE	SHOPDRAWING	DATE
AS SHOWN		12/09/2023

REV.	DATE	DSG	CHK	APP	AMENDMENTS	STATUS
B	12/05/2023	M.KH	M.KH	DR.M.M	ISSUED FOR INFORMATION	IFI
A	11/20/2022	M.KH	M.KH	DR.M.M	ISSUED FOR INFORMATION	IFI

DRAWING TITLE

6TH OF OCTOBER MONORAIL
SERVICE WALKWAYS
ZONE (1008)
Z8-HR062

Project Code	Rubric	Initiator	Lot	Ref	Number	Revision
9 3 M	0 4 7 6	A C C	6 0 D E P	D W G	0 8 4 4 0	B

Tekla structures

approval is subject to approval of coordination package between multi-discipline

REVIEWED WITH COMMENT MONORAILS PROJECT

All holes are 22mm U.N.O Length & Area & Weight per piece

Mark	Profile	Grade	QTY	Length	Area	Weight
Z8-HR061	CHS48.3*4.0	S235JR	1	1828.7	0.27	8.0

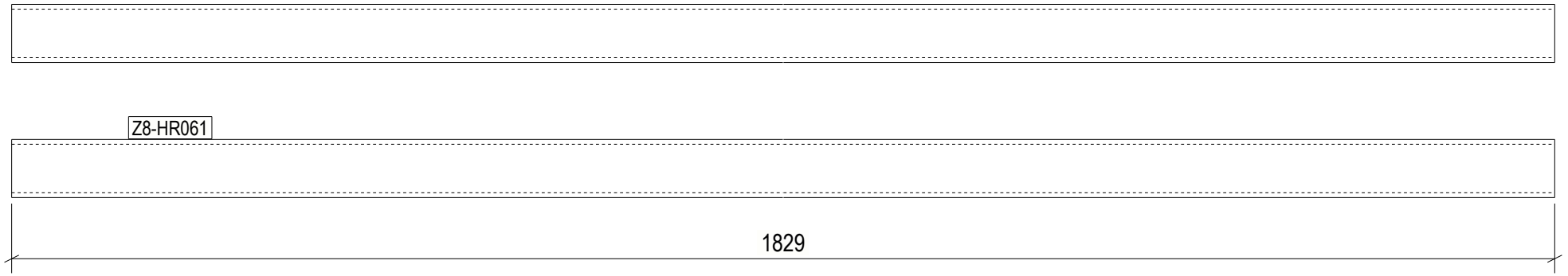

1 REQ'D AS DRAWN MK'D Z8-HR061

6 October Monorail Engineering Unit Valid For Construction

GENERAL NOTES:

1. THE DIMENSIONS SHOWN ARE NOMINAL (IN MILLIMETERS), U.N.O.
2. WELD SIZESHALL BE AISC MINIMUM OF 6 mm UNLESS NOTED OTHERWISE.
3. ALL FIELD WELDS SHALL BE INSPECTED PER QUALITY ASSURANCE AND SPECIAL INSPECTIONS.

REFERENCE DRAWINGS

1	93M-BOA-NAT-LOT-04833
2	93M-BOA-NAT-LOT-09170
3	93M-BOA-NAT-LOT-01976
4	93M-BOA-NAT-LOT-20021
5	
6	
7	
8	
9	

6TH OF OCTOBER CITY RAIL TRANSIT MONORAIL

The Authority — Hill International Consultant — Main Contractor — Structural Designer

KEY PLAN:

REV.	DATE	DSG	CHK	APP	AMENDMENTS	STATUS
B	12/05/2023	M.KH	M.KH	DR.M.M	ISSUED FOR INFORMATION	IFI
A	11/20/2022	M.KH	M.KH	DR.M.M	ISSUED FOR INFORMATION	IFI

SCALE: AS SHOWN | SHOPDRAWING | DATE: 12/05/2023

DRAWING TITLE

6TH OF OCTOBER MONORAIL SERVICE WALKWAYS ZONE (1008)
Z8-HR061

Project Code	Rubric	Initiator	Lot	Ref	Number	Revision
9 3 M	0 4 7 6	A C C	6 0 D E P	D W G	0 8 4 4 1	B

Tekla structures

approval is subject to approval of coordination package between multi-discipline

REVIEWED WITH COMMENT
MONORAILS PROJECT

All holes are 22mm U.N.O Length & Area & Weight per piece

Mark	Profile	Grade	QTY	Length	Area	Weight
Z8-HR060	CHS48.3*4.0	S235JR	1	1828.7	0.27	8.0

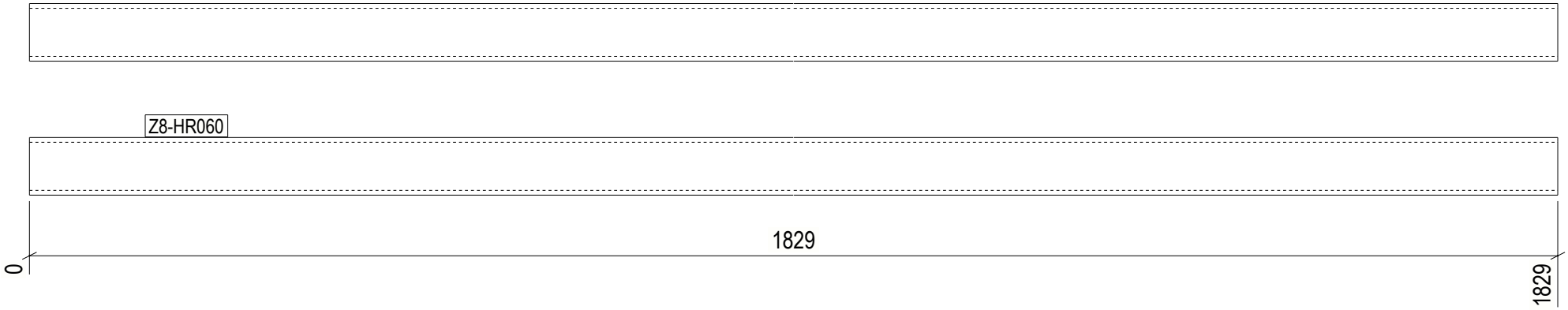

1 REQ'D AS DRAWN MK'D Z8-HR060

6 October Monorail
Engineering Unit
Valid For Construction

GENERAL NOTES:

1. THE DIMENSIONS SHOWN ARE NOMINAL (IN MILLIMETERS), U.N.O.
2. WELD SIZESHALL BE AISC MINIMUM OF 6 mm UNLESS NOTED OTHERWISE.
3. ALL FIELD WELDS SHALL BE INSPECTED PER QUALITY ASSURANCE AND SPECIAL INSPECTIONS.

REFERENCE DRAWINGS

1	93M-BOA-NAT-LOT-04833
2	93M-BOA-NAT-LOT-09170
3	93M-BOA-NAT-LOT-01976
4	93M-BOA-NAT-LOT-20021
5	
6	
7	
8	
9	

6TH OF OCTOBER CITY RAIL TRANSIT MONORAIL

The Authority | Hill International Consultant | Main Contractor | Structural Designer

KEY PLAN:

REV.	DATE	DSG	CHK	APP	AMENDMENTS	STATUS
B	12/05/2023	M.KH	M.KH	DR.M.M	ISSUED FOR INFORMATION	IFI
A	11/20/2022	M.KH	M.KH	DR.M.M	ISSUED FOR INFORMATION	IFI

SCALE: AS SHOWN | SHOPDRAWING | DATE: 12/05/2023

DRAWING TITLE
6TH OF OCTOBER MONORAIL
SERVICE WALKWAYS
ZONE (1008)
Z8-HR060

Project Code	Rubric	Initiator	Lot	Ref	Number	Revision
9 3 M	0 4 7 6	A C C	6 0 D E	P D W G	0 8 4 4 2	B

Tekla structures

All holes are 22mm U.N.O Length & Area & Weight per piece

Mark	Profile	Grade	QTY	Length	Area	Weight
Z8-HR059	CHS48.3*4.0	S235JR	1	1828.7	0.27	8.0

approval is subject to approval of coordination package between multi-discipline

REVIEWED WITH COMMENT MONORAILS PROJECT

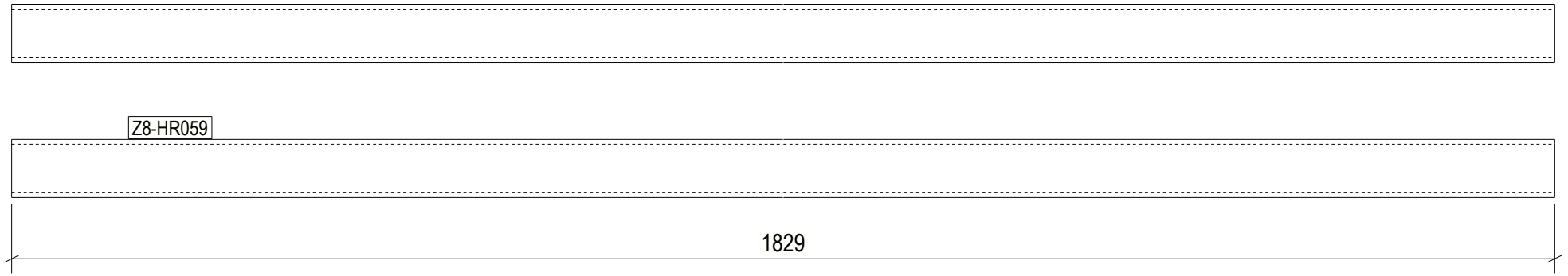

1 REQ'D AS DRAWN MK'D Z8-HR059

6 October Monorail Engineering Unit Valid For Construction

GENERAL NOTES:

1. THE DIMENSIONS SHOWN ARE NOMINAL (IN MILLIMETERS), U.N.O.
2. WELD SIZESHALL BE AISC MINIMUM OF 6 mm UNLESS NOTED OTHERWISE.
3. ALL FIELD WELDS SHALL BE INSPECTED PER QUALITY ASSURANCE AND SPECIAL INSPECTIONS.

REFERENCE DRAWINGS

1	93M-BOA-NAT-LOT-04833
2	93M-BOA-NAT-LOT-09170
3	93M-BOA-NAT-LOT-01976
4	93M-BOA-NAT-LOT-20021
5	
6	
7	
8	
9	

6TH OF OCTOBER CITY RAIL TRANSIT MONORAIL

The Authority | Hill International Consultant | Main Contractor | Structural Designer

KEY PLAN:

REV.	DATE	DSG	CHK	APP	AMENDMENTS	STATUS
B	12/05/2023	M.KH	M.KH	DR.M.M	ISSUED FOR INFORMATION	IFI
A	11/20/2022	M.KH	M.KH	DR.M.M	ISSUED FOR INFORMATION	IFI

SCALE: AS SHOWN | SHOPDRAWING | DATE: 12/05/2023

DRAWING TITLE

6TH OF OCTOBER MONORAIL SERVICE WALKWAYS ZONE (1008) Z8-HR059

Project Code	Rubric	Initiator	Lot	Ref	Number	Revision
9 3 M	0 4 7 6	A C C	6 0 D E P	D W G	0 8 4 4 3	B

Tekla structures

All holes are 22mm U.N.O Length & Area & Weight per piece

Mark	Profile	Grade	QTY	Length	Area	Weight
Z8-HR058	CHS48.3*4.0	S235JR	2	1879.6	0.28	8.2

approval is subject to approval of coordination package between multi-discipline

REVIEWED WITH COMMENT
MONORAILS PROJECT

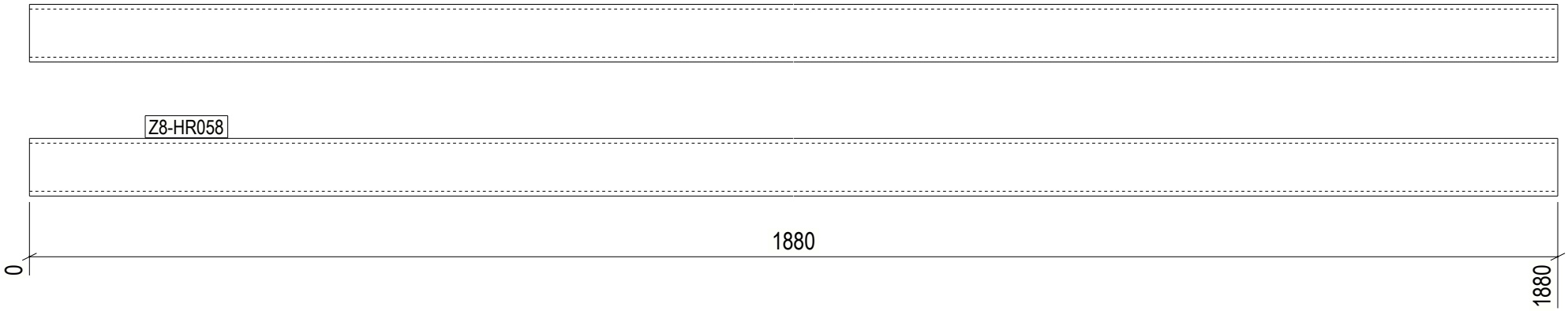

2 REQ'D AS DRAWN MK'D Z8-HR058

6 October Monorail
Engineering Unit
Valid For Construction

GENERAL NOTES:

1. THE DIMENSIONS SHOWN ARE NOMINAL (IN MILLIMETERS), U.N.O.
2. WELD SIZESHALL BE AISC MINIMUM OF 6 mm UNLESS NOTED OTHERWISE.
3. ALL FIELD WELDS SHALL BE INSPECTED PER QUALITY ASSURANCE AND SPECIAL INSPECTIONS.

REFERENCE DRAWINGS

1	93M-BOA-NAT-LOT-04833
2	93M-BOA-NAT-LOT-09170
3	93M-BOA-NAT-LOT-01976
4	93M-BOA-NAT-LOT-20021
5	
6	
7	
8	
9	

6TH OF OCTOBER CITY RAIL TRANSIT MONORAIL

The Authority | Hill International Consultant | Main Contractor | Structural Designer

KEY PLAN:

SCALE	SHOPDRAWING	DATE
AS SHOWN		12/09/2023

REV	DATE	DSG	CHK	APP	AMENDMENTS	STATUS
B	12/05/2023	M.KH	M.KH	DR.M.M	ISSUED FOR INFORMATION	IFI
A	11/20/2022	M.KH	M.KH	DR.M.M	ISSUED FOR INFORMATION	IFI

DRAWING TITLE

6TH OF OCTOBER MONORAIL
SERVICE WALKWAYS
ZONE (1008)
Z8-HR058

Project Code	Rubric	Initiator	Lot	Ref	Number	Revision
9 3 M	0 4 7 6	A C C	6 0 D E P	D W G	0 8 4 4 4	B

Tekla structures

approval is subject to approval of coordination package between multi-discipline

REVIEWED WITH COMMENT
MONORAILS PROJECT

All holes are 22mm U.N.O Length & Area & Weight per piece

Mark	Profile	Grade	QTY	Length	Area	Weight
Z8-HR057	CHS48.3*4.0	S235JR	1	3789.2	0.57	16.6

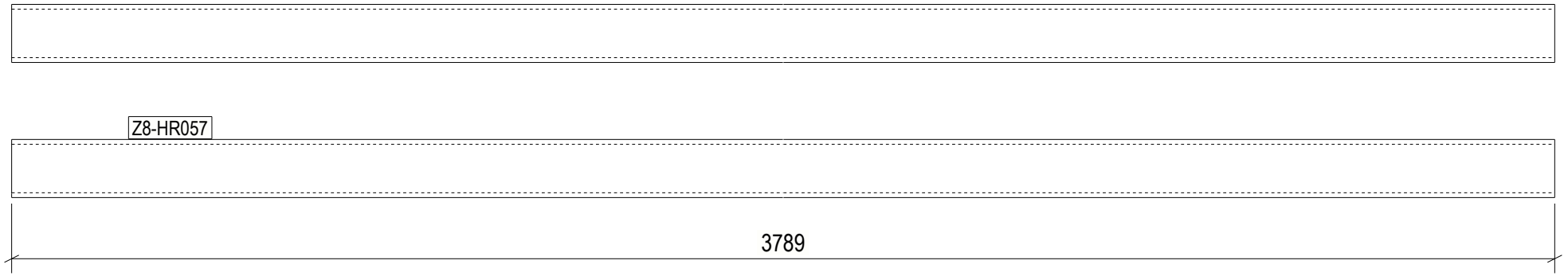

1 REQ'D AS DRAWN MK'D Z8-HR057

6 October Monorail
Engineering Unit
Valid For Construction

GENERAL NOTES:

1. THE DIMENSIONS SHOWN ARE NOMINAL (IN MILLIMETERS), U.N.O.
2. WELD SIZESHALL BE AISC MINIMUM OF 6 mm UNLESS NOTED OTHERWISE.
3. ALL FIELD WELDS SHALL BE INSPECTED PER QUALITY ASSURANCE AND SPECIAL INSPECTIONS.

REFERENCE DRAWINGS

1	93M-BOA-NAT-LOT-04833
2	93M-BOA-NAT-LOT-09170
3	93M-BOA-NAT-LOT-01976
4	93M-BOA-NAT-LOT-20021
5	
6	
7	
8	
9	

6TH OF OCTOBER CITY RAIL TRANSIT MONORAIL

The Authority — Hill International Consultant — Main Contractor — Structural Designer

KEY PLAN:

SCALE	SHOPDRAWING	DATE
AS SHOWN		12/09/2023

REV	DATE	DSG	CHK	APP	AMENDMENTS	STATUS
B	12/05/2023	M.KH	M.KH	DR.M.M	ISSUED FOR INFORMATION	IFI
A	11/20/2022	M.KH	M.KH	DR.M.M	ISSUED FOR INFORMATION	IFI

DRAWING TITLE

6TH OF OCTOBER MONORAIL
SERVICE WALKWAYS
ZONE (1008)
Z8-HR057

Project Code	Rubric	Initiator	Lot	Ref	Number	Revision
93M	047	6ACC	60DE	PDWG	08445	B

Tekla structures

approval is subject to approval of coordination package between multi-discipline

REVIEWED WITH COMMENT
MONORAILS PROJECT

All holes are 22mm U.N.O Length & Area & Weight per piece

Mark	Profile	Grade	QTY	Length	Area	Weight
Z8-HR056	CHS48.3*4.0	S235JR	1	3815.4	0.57	16.7

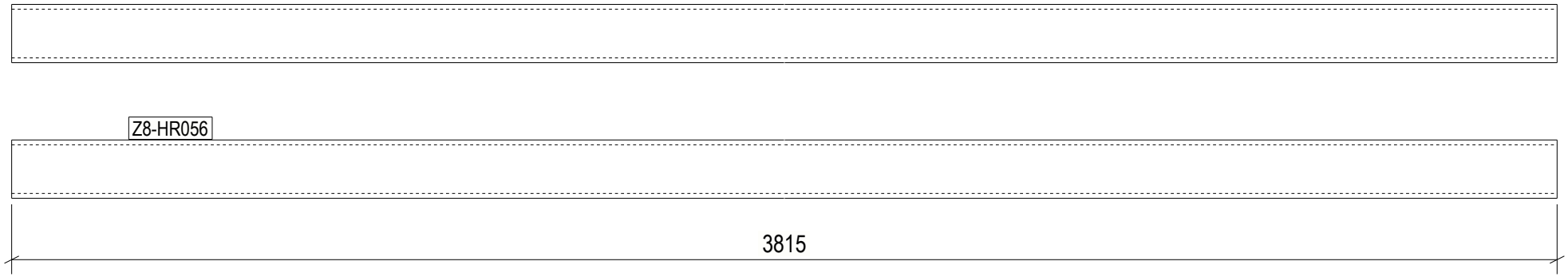

1 REQ'D AS DRAWN MK'D Z8-HR056

6 October Monorail
Engineering Unit
Valid For Construction

GENERAL NOTES:

1. THE DIMENSIONS SHOWN ARE NOMINAL (IN MILLIMETERS), U.N.O.
2. WELD SIZESHALL BE AISC MINIMUM OF 6 mm UNLESS NOTED OTHERWISE.
3. ALL FIELD WELDS SHALL BE INSPECTED PER QUALITY ASSURANCE AND SPECIAL INSPECTIONS.

REFERENCE DRAWINGS

1	93M-BOA-NAT-LOT-04833
2	93M-BOA-NAT-LOT-09170
3	93M-BOA-NAT-LOT-01976
4	93M-BOA-NAT-LOT-20021
5	
6	
7	
8	
9	

6TH OF OCTOBER CITY RAIL TRANSIT MONORAIL

The Authority — Hill International Consultant — Main Contractor — Structural Designer

KEY PLAN:

REV.	DATE	DSG	CHK	APP	AMENDMENTS	STATUS
B	12/05/2023	M.KH	M.KH	DR.M.M	ISSUED FOR INFORMATION	IFI
A	11/20/2022	M.KH	M.KH	DR.M.M	ISSUED FOR INFORMATION	IFI

SCALE: AS SHOWN | SHOPDRAWING | DATE: 12/05/2023

DRAWING TITLE
6TH OF OCTOBER MONORAIL
SERVICE WALKWAYS
ZONE (1008)
Z8-HR056

Project Code	Rubric	Initiator	Lot	Ref	Number	Revision
9 3 M	0 4 7 6	A C C	6 0 D E	P D W G	0 8 4 4 6	B

Tekla structures

approval is subject to approval of coordination package between multi-discipline

REVIEWED WITH COMMENT
MONORAILS PROJECT

All holes are 22mm U.N.O Length & Area & Weight per piece

Mark	Profile	Grade	QTY	Length	Area	Weight
Z8-HR055	CHS48.3*4.0	S235JR	1	1186.7	0.18	5.2

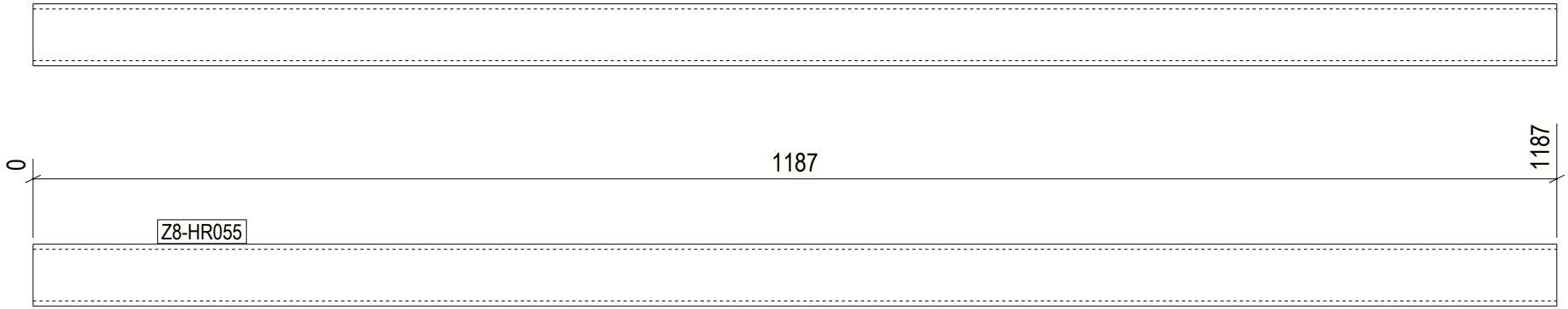

1 REQ'D AS DRAWN MK'D Z8-HR055

6 October Monorail
Engineering Unit
Valid For Construction

Tekla structures

GENERAL NOTES:

1. THE DIMENSIONS SHOWN ARE NOMINAL (IN MILLIMETERS), U.N.O.
2. WELD SIZESHALL BE AISC MINIMUM OF 6 mm UNLESS NOTED OTHERWISE.
3. ALL FIELD WELDS SHALL BE INSPECTED PER QUALITY ASSURANCE AND SPECIAL INSPECTIONS.

REFERENCE DRAWINGS

1	93M-BOA-NAT-LOT-04833
2	93M-BOA-NAT-LOT-09170
3	93M-BOA-NAT-LOT-01976
4	93M-BOA-NAT-LOT-20021
5	
6	
7	
8	
9	

6TH OF OCTOBER CITY RAIL TRANSIT MONORAIL

The Authority — Hill International Consultant — Main Contractor — Structural Designer

KEY PLAN:

SCALE	SHOPDRAWING	DATE
AS SHOWN		12/09/2023

REV	DATE	DSG	CHK	APP	AMENDMENTS	STATUS
B	12/05/2023	M.KH	M.KH	DR.BM	ISSUED FOR INFORMATION	IFI
A	11/20/2022	M.KH	M.KH	DR.BM	ISSUED FOR INFORMATION	IFI

DRAWING TITLE

6TH OF OCTOBER MONORAIL
SERVICE WALKWAYS
ZONE (1008)
Z8-HR055

Project Code	Rubric	Initiator	Lot	Ref	Number	Revision
93M	047	ACC	60	DEP	DWG	08447	B

approval is subject to approval of coordination package between multi-discipline

REVIEWED WITH COMMENT
MONORAILS PROJECT

All holes are 22mm U.N.O Length & Area & Weight per piece

Mark	Profile	Grade	QTY	Length	Area	Weight
Z8-HR054	CHS48.3*4.0	S235JR	1	3893.6	0.58	17.0

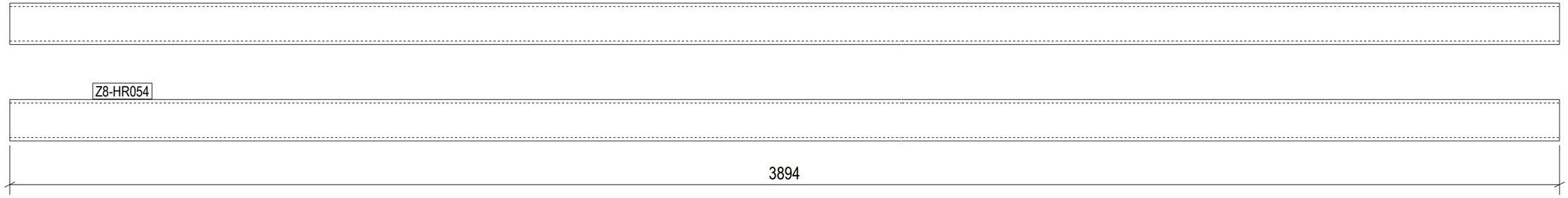

1 REQ'D AS DRAWN MK'D Z8-HR054

6 October Monorail
Engineering Unit
Valid For Construction

GENERAL NOTES:

1. THE DIMENSIONS SHOWN ARE NOMINAL (IN MILLIMETERS), U.N.O.
2. WELD SIZESHALL BE AISC MINIMUM OF 6 mm UNLESS NOTED OTHERWISE.
3. ALL FIELD WELDS SHALL BE INSPECTED PER QUALITY ASSURANCE AND SPECIAL INSPECTIONS.

REFERENCE DRAWINGS

1	93M-BOA-NAT-LOT-04833
2	93M-BOA-NAT-LOT-09170
3	93M-BOA-NAT-LOT-01976
4	93M-BOA-NAT-LOT-20021
5	
6	
7	
8	
9	

6TH OF OCTOBER CITY RAIL TRANSIT MONORAIL

The Authority — Consultant — Main Contractor — Structural Designer

KEY PLAN:

SCALE	SHOP DRAWING	DATE
AS SHOWN		12/05/2023

REV	DATE	DSN	CHK	APP	AMENDMENT DESCRIPTION	STATUS
B	12/05/2023	M.KH	M.KH	DR.M.M	ISSUED FOR INFORMATION	IFI

DRAWING TITLE

6TH OF OCTOBER MONORAIL
SERVICE WALKWAYS
ZONE (1008)
Z8-HR054

Project Code	Rubric	Initiator	Lot	Ref	Number	Revision
93M	047	ACC	600	DEP	DWG	08448	B

Tekla structures

approval is subject to approval of coordination package between multi-discipline

REVIEWED WITH COMMENT
MONORAILS PROJECT

All holes are 22mm U.N.O Length & Area & Weight per piece						
Z8-HR053	CHS48.3*4.0	S235JR	1	3893.6	0.58	17.0
Mark	Profile	Grade	QTY	Length	Area	Weight

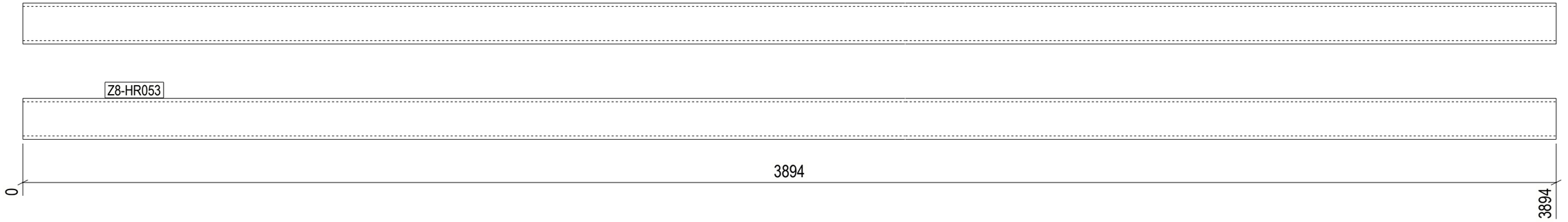

1 REQ'D AS DRAWN MK'D Z8-HR053

6 October Monorail
Engineering Unit
Valid For Construction

GENERAL NOTES:

1. THE DIMENSIONS SHOWN ARE NOMINAL (IN MILLIMETERS), U.N.O.
2. WELD SIZESHALL BE AISC MINIMUM OF 6 mm UNLESS NOTED OTHERWISE.
3. ALL FIELD WELDS SHALL BE INSPECTED PER QUALITY ASSURANCE AND SPECIAL INSPECTIONS.

REFERENCE DRAWINGS

1	93M-BOA-NAT-LOT-04833
2	93M-BOA-NAT-LOT-09170
3	93M-BOA-NAT-LOT-01976
4	93M-BOA-NAT-LOT-20021
5	
6	
7	
8	
9	

6TH OF OCTOBER CITY RAIL TRANSIT MONORAIL

The Authority — Hill International Consultant — Main Contractor — Structural Designer

KEY PLAN:

SCALE	SHOP DRAWING	DATE
AS SHOWN		12/05/2023

REV	DATE	DSN	CHK	APP	AMENDMENT DESCRIPTION	STATUS
B	12/05/2023	M.KH	M.KH	DR.M.M	ISSUED FOR INFORMATION	IFI

DRAWING TITLE

6TH OF OCTOBER MONORAIL
SERVICE WALKWAYS
ZONE (1008)
Z8-HR053

Project Code	Rubric	Initiator	Lot	Ref	Number	Revision
9 3 M	0 4 7 6	A C C	6 0 D E P	D W G	0 8 4 4 9	B

Tekla structures

approval is subject to approval of coordination package between multi-discipline

REVIEWED WITH COMMENT
MONORAILS PROJECT

All holes are 22mm U.N.O Length & Area & Weight per piece						
Z8-HR052	CHS48.3*4.0	S235JR	1	3893.6	0.58	17.0
Mark	Profile	Grade	QTY	Length	Area	Weight

Z8-HR052

3894

1 REQ'D AS DRAWN MK'D Z8-HR052

6 October Monorail
Engineering Unit
Valid For Construction

GENERAL NOTES:

1. THE DIMENSIONS SHOWN ARE NOMINAL (IN MILLIMETERS), U.N.O.
2. WELD SIZESHALL BE AISC MINIMUM OF 6 mm UNLESS NOTED OTHERWISE.
3. ALL FIELD WELDS SHALL BE INSPECTED PER QUALITY ASSURANCE AND SPECIAL INSPECTIONS.

REFERENCE DRAWINGS

1	93M-BOA-NAT-LOT-04833
2	93M-BOA-NAT-LOT-09170
3	93M-BOA-NAT-LOT-01976
4	93M-BOA-NAT-LOT-20021
5	
6	
7	
8	
9	

6TH OF OCTOBER CITY RAIL TRANSIT MONORAIL

The Authority — Consultant — Main Contractor — Structural Designer

KEY PLAN:

SCALE: AS SHOWN | SHOP DRAWING | DATE: 12/05/2023 | ID:

REV	DATE	DSN	CHK	APP	AMENDMENTS/DESCRIPTION	STATUS
B	12/05/2023	M.KH	M.KH	DR.M.M	ISSUED FOR INFORMATION	IFI

DRAWING TITLE

6TH OF OCTOBER MONORAIL
SERVICE WALKWAYS
ZONE (1008)
Z8-HR052

Project Code	Rubric	Initiator	Lot	Ref	Number	Revision
9 3 M	0 4 7 6	A C C	6 0 D E P	D W G	0 8 4 5 0	B

Tekla structures

approval is subject to approval of coordination package between multi-discipline

REVIEWED WITH COMMENT
MONORAILS PROJECT

All holes are 22mm U.N.O Length & Area & Weight per piece

Mark	Profile	Grade	QTY	Length	Area	Weight
Z8-HR051	CHS48.3*4.0	S235JR	1	3893.6	0.58	17.0

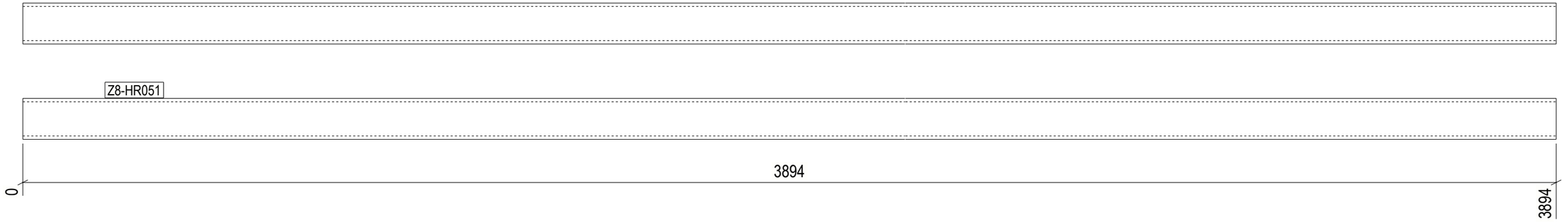

1 REQ'D AS DRAWN MK'D Z8-HR051

6 October Monorail
Engineering Unit
Valid For Construction

GENERAL NOTES:

1. THE DIMENSIONS SHOWN ARE NOMINAL (IN MILLIMETERS), U.N.O.
2. WELD SIZESHALL BE AISC MINIMUM OF 6 mm UNLESS NOTED OTHERWISE.
3. ALL FIELD WELDS SHALL BE INSPECTED PER QUALITY ASSURANCE AND SPECIAL INSPECTIONS.

REFERENCE DRAWINGS

1	93M-BOA-NAT-LOT-04833
2	93M-BOA-NAT-LOT-09170
3	93M-BOA-NAT-LOT-01976
4	93M-BOA-NAT-LOT-20021
5	
6	
7	
8	
9	

6TH OF OCTOBER CITY RAIL TRANSIT MONORAIL

The Authority — Hill International Consultant — Main Contractor — Structural Designer

KEY PLAN:

SCALE: AS SHOWN | SHOP DRAWING | DATE: 12/05/2023 | ID:

REV	DATE	DSN	CHK	APP	AMENDMENTS/REVISION	STATUS
B	12/05/2023	M.KH	M.KH	DR.M.M	ISSUED FOR INFORMATION	IFI

DRAWING TITLE

6TH OF OCTOBER MONORAIL
SERVICE WALKWAYS
ZONE (1008)
Z8-HR051

Project Code	Rubric	Initiator	Lot	Ref	Number	Revision
93M	0476	ACC	600	DEP	DWG	08451	B

Tekla structures

approval is subject to approval of coordination package between multi-discipline

REVIEWED WITH COMMENT MONORAILS PROJECT

All holes are 22mm U.N.O Length & Area & Weight per piece						
Z8-HR050	CHS48.3*4.0	S235JR	1	3893.6	0.58	17.0
Mark	Profile	Grade	QTY	Length	Area	Weight

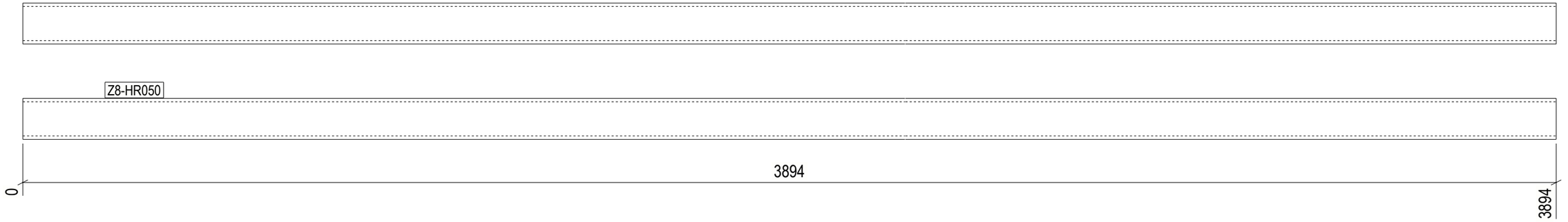

1 REQ'D AS DRAWN MK'D Z8-HR050

6 October Monorail Engineering Unit Valid For Construction

GENERAL NOTES:

1. THE DIMENSIONS SHOWN ARE NOMINAL (IN MILLIMETERS), U.N.O.
2. WELD SIZESHALL BE AISC MINIMUM OF 6 mm UNLESS NOTED OTHERWISE.
3. ALL FIELD WELDS SHALL BE INSPECTED PER QUALITY ASSURANCE AND SPECIAL INSPECTIONS.

REFERENCE DRAWINGS

1	93M-BOA-NAT-LOT-04833
2	93M-BOA-NAT-LOT-09170
3	93M-BOA-NAT-LOT-01976
4	93M-BOA-NAT-LOT-20021
5	
6	
7	
8	
9	

6TH OF OCTOBER CITY RAIL TRANSIT MONORAIL

The Authority | Hill International Consultant | ORASCOM BOMBARDIER Main Contractor | INNOVA Structural Designer

KEY PLAN:

SCALE	SHOP DRAWING	DATE
AS SHOWN		12/05/2023

REV	DATE	DSN	CHK	APP	AMENDMENTS	STATUS
B	12/05/2023	M.KH	M.KH	DR.M.M	ISSUED FOR INFORMATION	IFI

DRAWING TITLE

6TH OF OCTOBER MONORAIL SERVICE WALKWAYS ZONE (1008)

Z8-HR050

Project Code	Rubric	Initiator	Lot	Ref	Number	Revision
93M	0476	ACC	60DEP	DWG	08452	B

Tekla structures

All holes are 22mm U.N.O Length & Area & Weight per piece

Mark	Profile	Grade	QTY	Length	Area	Weight
Z8-HR049	CHS48.3*4.0	S235JR	1	3624.8	0.54	15.8

approval is subject to approval of coordination package between multi-discipline

REVIEWED WITH COMMENT
MONORAILS PROJECT

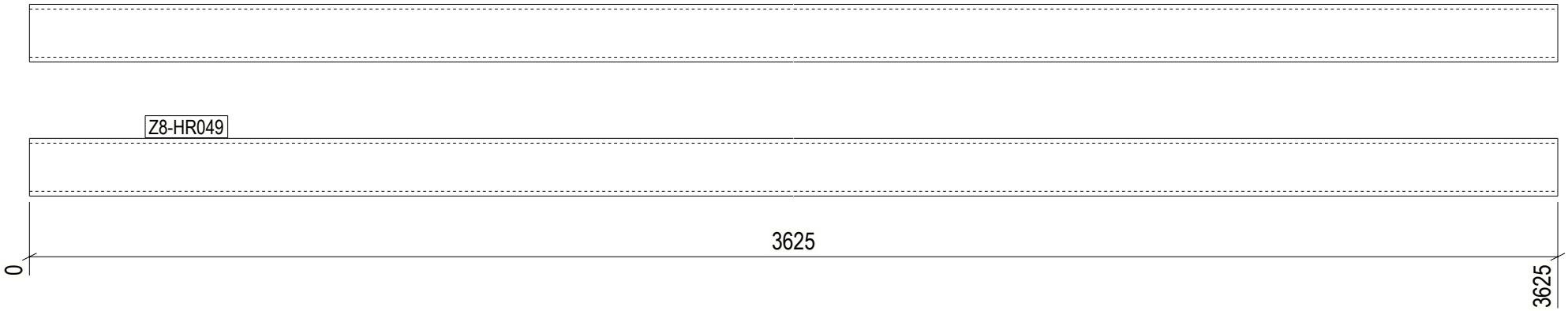

1 REQ'D AS DRAWN MK'D Z8-HR049

6 October Monorail
Engineering Unit
Valid For Construction

GENERAL NOTES:

1. THE DIMENSIONS SHOWN ARE NOMINAL (IN MILLIMETERS), U.N.O.
2. WELD SIZESHALL BE AISC MINIMUM OF 6 mm UNLESS NOTED OTHERWISE.
3. ALL FIELD WELDS SHALL BE INSPECTED PER QUALITY ASSURANCE AND SPECIAL INSPECTIONS.

REFERENCE DRAWINGS

1	93M-BOA-NAT-LOT-04833
2	93M-BOA-NAT-LOT-09170
3	93M-BOA-NAT-LOT-01976
4	93M-BOA-NAT-LOT-20021
5	
6	
7	
8	
9	

6TH OF OCTOBER CITY RAIL TRANSIT MONORAIL

The Authority | Hill International Consultant | Main Contractor | Structural Designer

KEY PLAN:

REV.	DATE	DSG	CHK	APP	AMENDMENTS	STATUS
B	12/05/2023	M.KH	M.KH	DR.M.M	ISSUED FOR INFORMATION	IFI
A	11/20/2022	M.KH	M.KH	DR.M.M	ISSUED FOR INFORMATION	IFI

SCALE: AS SHOWN | SHOPDRAWING | DATE: 12/05/2023

DRAWING TITLE
6TH OF OCTOBER MONORAIL
SERVICE WALKWAYS
ZONE (1008)
Z8-HR049

Project Code	Rubric	Initiator	Lot	Ref	Number	Revision
9 3 M	0 4 7 6	A C C	6 0 D E P	D W G	0 8 4 5 3	B

Tekla structures

All holes are 22mm U.N.O Length & Area & Weight per piece

Mark	Profile	Grade	QTY	Length	Area	Weight
Z8-HR048	CHS48.3*4.0	S235JR	1	3811.1	0.57	16.7

approval is subject to approval of coordination package between multi-discipline

REVIEWED WITH COMMENT MONORAILS PROJECT

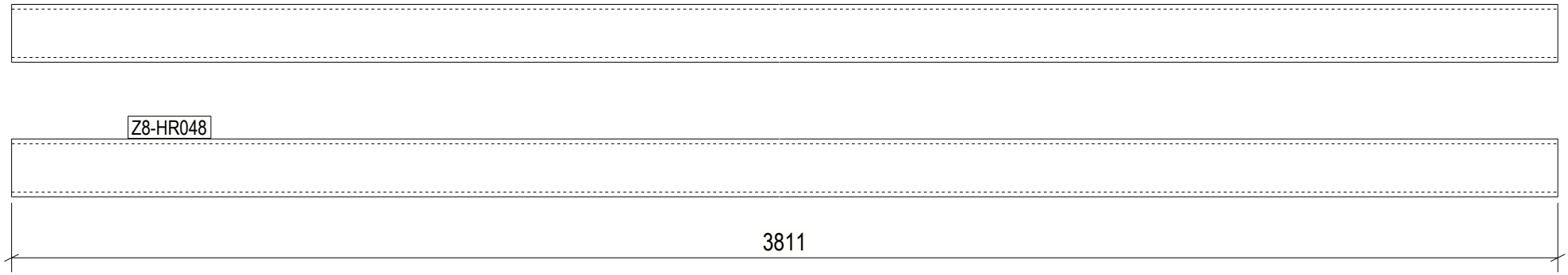

1 REQ'D AS DRAWN MK'D Z8-HR048

6 October Monorail Engineering Unit Valid For Construction

GENERAL NOTES:

1. THE DIMENSIONS SHOWN ARE NOMINAL (IN MILLIMETERS), U.N.O.
2. WELD SIZESHALL BE AISC MINIMUM OF 6 mm UNLESS NOTED OTHERWISE.
3. ALL FIELD WELDS SHALL BE INSPECTED PER QUALITY ASSURANCE AND SPECIAL INSPECTIONS.

REFERENCE DRAWINGS

1	93M-BOA-NAT-LOT-04833
2	93M-BOA-NAT-LOT-09170
3	93M-BOA-NAT-LOT-01976
4	93M-BOA-NAT-LOT-20021
5	
6	
7	
8	
9	

6TH OF OCTOBER CITY RAIL TRANSIT MONORAIL

The Authority | Hill International Consultant | Main Contractor | Structural Designer

KEY PLAN:

REV.	DATE	DSG	CHK	APP	AMENDMENTS	STATUS
B	12/05/2023	M.KH	M.KH	DR.M.M	ISSUED FOR INFORMATION	IFI
A	11/20/2022	M.KH	M.KH	DR.M.M	ISSUED FOR INFORMATION	IFI

SCALE: AS SHOWN | SHOPDRAWING | DATE: 12/05/2023

DRAWING TITLE

6TH OF OCTOBER MONORAIL SERVICE WALKWAYS ZONE (1008) Z8-HR048

Project Code	Rubric	Initiator	Lot	Ref	Number	Revision
9 3 M	0 4 7 6	A C C	6 0 D E	P D W	G 0 8 4 5 4	B

Tekla structures

approval is subject to approval of coordination package between multi-discipline

REVIEWED WITH COMMENT
MONORAILS PROJECT

All holes are 22mm U.N.O Length & Area & Weight per piece

Mark	Profile	Grade	QTY	Length	Area	Weight
Z8-HR047	CHS48.3*4.0	S235JR	1	3811.1	0.57	16.7

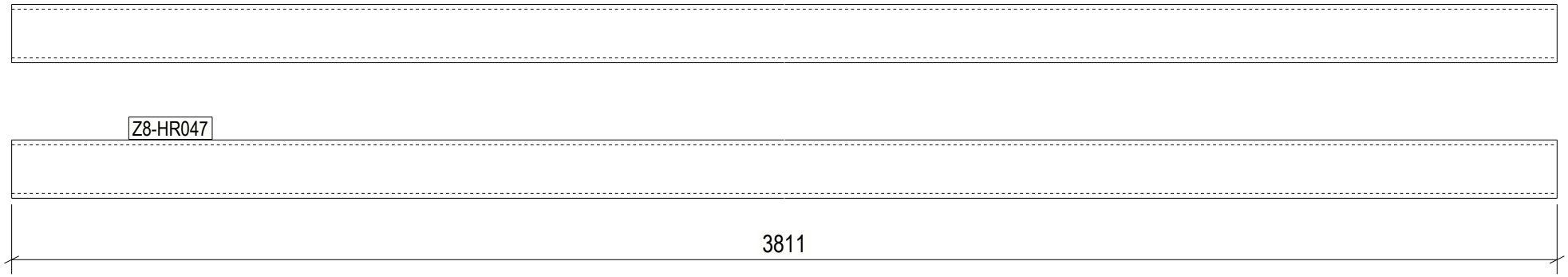

1 REQ'D AS DRAWN MK'D Z8-HR047

6 October Monorail
Engineering Unit
Valid For Construction

GENERAL NOTES:

1. THE DIMENSIONS SHOWN ARE NOMINAL (IN MILLIMETERS), U.N.O.
2. WELD SIZESHALL BE AISC MINIMUM OF 6 mm UNLESS NOTED OTHERWISE.
3. ALL FIELD WELDS SHALL BE INSPECTED PER QUALITY ASSURANCE AND SPECIAL INSPECTIONS.

REFERENCE DRAWINGS

1	93M-BOA-NAT-LOT-04833
2	93M-BOA-NAT-LOT-09170
3	93M-BOA-NAT-LOT-01976
4	93M-BOA-NAT-LOT-20021
5	
6	
7	
8	
9	

6TH OF OCTOBER CITY RAIL TRANSIT MONORAIL

The Authority — Hill International Consultant — Main Contractor — Structural Designer

KEY PLAN:

SCALE	SHOPDRAWING	DATE
AS SHOWN		12/09/2023

REV	DATE	DSG	CHK	APP	AMENDMENTS	STATUS
B	12/05/2023	M.KH	M.KH	DR.M.M	ISSUED FOR INFORMATION	IFI
A	11/20/2022	M.KH	M.KH	DR.M.M	ISSUED FOR INFORMATION	IFI

DRAWING TITLE

6TH OF OCTOBER MONORAIL
SERVICE WALKWAYS
ZONE (1008)
Z8-HR047

Project Code	Rubric	Initiator	Lot	Ref	Number	Revision
93M	047	6ACC	60DEP	DWG	08455	B

Tekla structures

approval is subject to approval of coordination package between multi-discipline

REVIEWED WITH COMMENT
MONORAILS PROJECT

All holes are 22mm U.N.O Length & Area & Weight per piece

Mark	Profile	Grade	QTY	Length	Area	Weight
Z8-HR046	CHS48.3*4.0	S235JR	1	3915.1	0.59	17.1

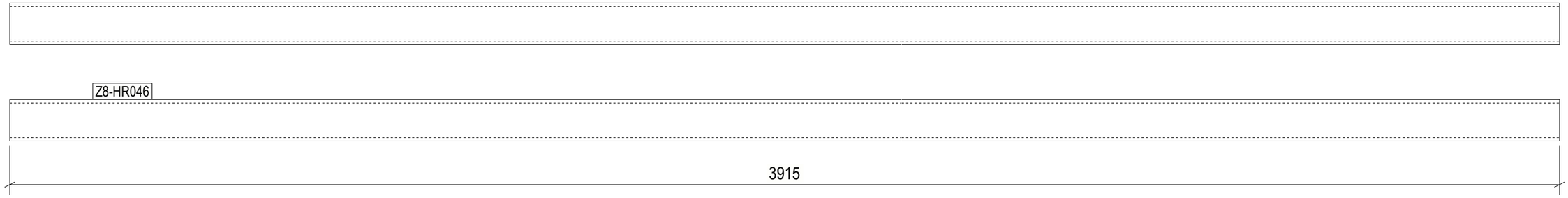

1 REQ'D AS DRAWN MK'D Z8-HR046

6 October Monorail
Engineering Unit
Valid For Construction

GENERAL NOTES:

1. THE DIMENSIONS SHOWN ARE NOMINAL (IN MILLIMETERS), U.N.O.
2. WELD SIZESHALL BE AISC MINIMUM OF 6 mm UNLESS NOTED OTHERWISE.
3. ALL FIELD WELDS SHALL BE INSPECTED PER QUALITY ASSURANCE AND SPECIAL INSPECTIONS.

REFERENCE DRAWINGS

1	93M-BOA-NAT-LOT-04833
2	93M-BOA-NAT-LOT-09170
3	93M-BOA-NAT-LOT-01976
4	93M-BOA-NAT-LOT-20021
5	
6	
7	
8	
9	

6TH OF OCTOBER CITY RAIL TRANSIT MONORAIL

The Authority — Consultant — Main Contractor — Structural Designer

KEY PLAN:

SCALE	SHOP DRAWING	DATE
AS SHOWN		12/05/2023

REV	DATE	DSN	CHK	APP	AMENDMENTS DESCRIPTION	STATUS
B	12/05/2023	M.KH	M.KH	DR.M.M	ISSUED FOR INFORMATION	IFI

DRAWING TITLE

6TH OF OCTOBER MONORAIL
SERVICE WALKWAYS
ZONE (1008)
Z8-HR046

Project Code	Rubric	Initiator	Lot	Ref	Number	Revision
93M	0476	ACC	600	DEP	DWG	08456	B

Tekla structures

approval is subject to approval of coordination package between multi-discipline

REVIEWED WITH COMMENT MONORAILS PROJECT

All holes are 22mm U.N.O Length & Area & Weight per piece						
Z8-HR045	CHS48.3*4.0	S235JR	1	3915.1	0.59	17.1
Mark	Profile	Grade	QTY	Length	Area	Weight

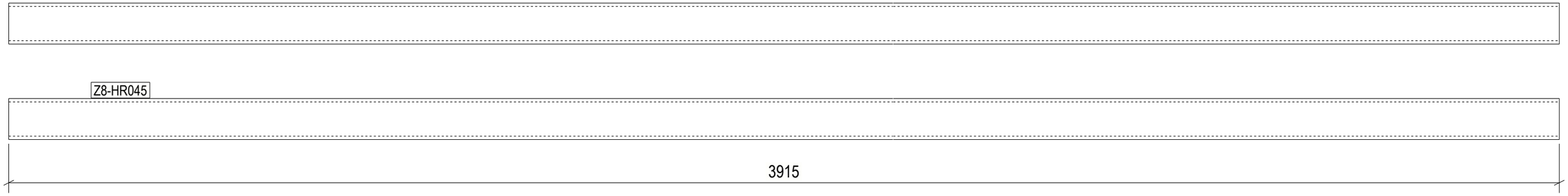

1 REQ'D AS DRAWN MK'D Z8-HR045

6 October Monorail Engineering Unit Valid For Construction

GENERAL NOTES:

1. THE DIMENSIONS SHOWN ARE NOMINAL (IN MILLIMETERS), U.N.O.
2. WELD SIZESHALL BE AISC MINIMUM OF 6 mm UNLESS NOTED OTHERWISE.
3. ALL FIELD WELDS SHALL BE INSPECTED PER QUALITY ASSURANCE AND SPECIAL INSPECTIONS.

REFERENCE DRAWINGS

1	93M-BOA-NAT-LOT-04833
2	93M-BOA-NAT-LOT-09170
3	93M-BOA-NAT-LOT-01976
4	93M-BOA-NAT-LOT-20021
5	
6	
7	
8	
9	

6TH OF OCTOBER CITY RAIL TRANSIT MONORAIL

The Authority | Hill International Consultant | ORASCOM BOMBARDIER Main Contractor | INNOVA Structural Designer

KEY PLAN:

SCALE	SHOP DRAWING	DATE
AS SHOWN		12/05/2023

REV	DATE	DSN	CHK	APP	AMENDMENTS	STATUS
B	12/05/2023	M.KH	M.KH	DR.M.M	ISSUED FOR INFORMATION	IFI

DRAWING TITLE

6TH OF OCTOBER MONORAIL SERVICE WALKWAYS ZONE (1008)

Z8-HR045

Project Code	Rubric	Initiator	Lot	Ref	Number	Revision
93M	0476	ACC	60DEP	DWG	08457	B

Tekla structures

approval is subject to approval of coordination package between multi-discipline

REVIEWED WITH COMMENT
MONORAILS PROJECT

All holes are 22mm U.N.O Length & Area & Weight per piece						
Z8-HR044	CHS48.3*4.0	S235JR	1	3915.1	0.59	17.1
Mark	Profile	Grade	QTY	Length	Area	Weight

Z8-HR044

3915

1 REQ'D AS DRAWN MK'D Z8-HR044

6 October Monorail
Engineering Unit
Valid For Construction

GENERAL NOTES:

1. THE DIMENSIONS SHOWN ARE NOMINAL (IN MILLIMETERS), U.N.O.
2. WELD SIZESHALL BE AISC MINIMUM OF 6 mm UNLESS NOTED OTHERWISE.
3. ALL FIELD WELDS SHALL BE INSPECTED PER QUALITY ASSURANCE AND SPECIAL INSPECTIONS.

REFERENCE DRAWINGS

1	93M-BOA-NAT-LOT-04833
2	93M-BOA-NAT-LOT-09170
3	93M-BOA-NAT-LOT-01976
4	93M-BOA-NAT-LOT-20021
5	
6	
7	
8	
9	

6TH OF OCTOBER CITY RAIL TRANSIT MONORAIL

The Authority — Hill International Consultant — Main Contractor — Structural Designer

KEY PLAN:

SCALE	SHOP DRAWING	DATE
AS SHOWN		12/05/2023

REV	DATE	DSN	CHK	APP	AMENDMENTS DESCRIPTION	STATUS
B	12/05/2023	M.KH	M.KH	DR.M.M	ISSUED FOR INFORMATION	IFI

DRAWING TITLE

6TH OF OCTOBER MONORAIL
SERVICE WALKWAYS
ZONE (1008)
Z8-HR044

Project Code	Rubric	Initiator	Lot	Ref	Number	Revision
9 3 M	0 4 7 6	A C C	6 0 D E	P	D W G	0 8 4 5 8	B

Tekla structures

approval is subject to approval of coordination package between multi-discipline

REVIEWED WITH COMMENT
MONORAILS PROJECT

All holes are 22mm U.N.O Length & Area & Weight per piece						
Z8-HR043	CHS48.3*4.0	S235JR	1	3947.8	0.59	17.3
Mark	Profile	Grade	QTY	Length	Area	Weight

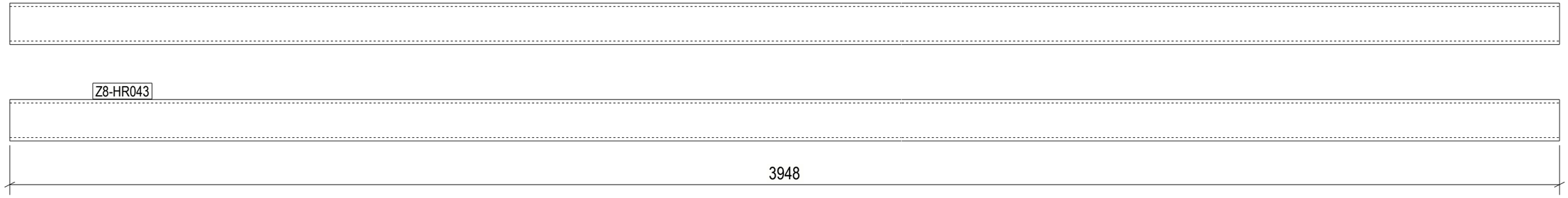

1 REQ'D AS DRAWN MK'D Z8-HR043

GENERAL NOTES:

1. THE DIMENSIONS SHOWN ARE NOMINAL (IN MILLIMETERS), U.N.O.
2. WELD SIZESHALL BE AISC MINIMUM OF 6 mm UNLESS NOTED OTHERWISE.
3. ALL FIELD WELDS SHALL BE INSPECTED PER QUALITY ASSURANCE AND SPECIAL INSPECTIONS.

REFERENCE DRAWINGS

1	93M-BOA-NAT-LOT-04833
2	93M-BOA-NAT-LOT-09170
3	93M-BOA-NAT-LOT-01976
4	93M-BOA-NAT-LOT-20021
5	
6	
7	
8	
9	

6TH OF OCTOBER CITY RAIL TRANSIT MONORAIL

The Authority — Hill International Consultant — Main Contractor — Structural Designer

KEY PLAN:

6 October Monorail Engineering Unit Valid For Construction

SCALE	SHOP DRAWING	DATE
AS SHOWN		12/05/2023

REV	DATE	DSN	CHK	APP	AMENDMENTS/DESCRIPTION	STATUS
B	12/05/2023	M.KH	M.KH	DR.M.M	ISSUED FOR INFORMATION	IFI

DRAWING TITLE

6TH OF OCTOBER MONORAIL SERVICE WALKWAYS ZONE (1008) Z8-HR043

Project Code	Rubric	Initiator	Lot	Ref	Number	Revision
9 3 M	0 4 7 6	A C C	6 0 D E P	D W G	0 8 4 5 9	B

Tekla structures

approval is subject to approval of coordination package between multi-discipline

REVIEWED WITH COMMENT
MONORAILS PROJECT

All holes are 22mm U.N.O Length & Area & Weight per piece						
Z8-HR042	CHS48.3*4.0	S235JR	1	3947.8	0.59	17.3
Mark	Profile	Grade	QTY	Length	Area	Weight

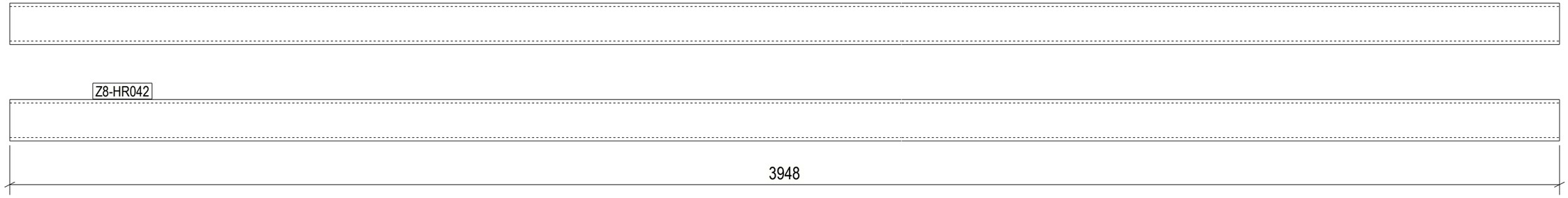

1 REQ'D AS DRAWN MK'D Z8-HR042

GENERAL NOTES:

1. THE DIMENSIONS SHOWN ARE NOMINAL (IN MILLIMETERS), U.N.O.
2. WELD SIZESHALL BE AISC MINIMUM OF 6 mm UNLESS NOTED OTHERWISE.
3. ALL FIELD WELDS SHALL BE INSPECTED PER QUALITY ASSURANCE AND SPECIAL INSPECTIONS.

REFERENCE DRAWINGS

1	93M-BOA-NAT-LOT-04833
2	93M-BOA-NAT-LOT-09170
3	93M-BOA-NAT-LOT-01976
4	93M-BOA-NAT-LOT-20021
5	
6	
7	
8	
9	

6TH OF OCTOBER CITY RAIL TRANSIT MONORAIL

The Authority — Consultant — Main Contractor — Structural Designer

KEY PLAN:

6 October Monorail Engineering Unit
Valid For Construction

SCALE: AS SHOWN
SHOP DRAWING
DATE: 12/05/2023

REV	DATE	DSN	CHK	APP	AMENDMENTS DESCRIPTION	STATUS
B	12/05/2023	M.KH	M.KH	DR.M.M	ISSUED FOR INFORMATION	IFI

DRAWING TITLE
6TH OF OCTOBER MONORAIL
SERVICE WALKWAYS
ZONE (1008)
Z8-HR042

Project Code	Rubric	Initiator	Lot	Ref	Number	Revision
9 3 M	0 4 7 6	A C C	6 0 0 D E P	D W G	0 8 4 6 0	B

Tekla structures

approval is subject to approval of coordination package between multi-discipline

REVIEWED WITH COMMENT
MONORAILS PROJECT

All holes are 22mm U.N.O Length & Area & Weight per piece						
Z8-HR041	CHS48.3*4.0	S235JR	1	3789.6	0.57	16.6
Mark	Profile	Grade	QTY	Length	Area	Weight

Z8-HR041

3790

1 REQ'D AS DRAWN MK'D Z8-HR041

6 October Monorail
Engineering Unit
Valid For Construction

GENERAL NOTES:

1. THE DIMENSIONS SHOWN ARE NOMINAL (IN MILLIMETERS), U.N.O.
2. WELD SIZESHALL BE AISC MINIMUM OF 6 mm UNLESS NOTED OTHERWISE.
3. ALL FIELD WELDS SHALL BE INSPECTED PER QUALITY ASSURANCE AND SPECIAL INSPECTIONS.

REFERENCE DRAWINGS

1	93M-BOA-NAT-LOT-04833
2	93M-BOA-NAT-LOT-09170
3	93M-BOA-NAT-LOT-01976
4	93M-BOA-NAT-LOT-20021
5	
6	
7	
8	
9	

6TH OF OCTOBER CITY RAIL TRANSIT MONORAIL

The Authority — Hill International Consultant — Main Contractor — Structural Designer

KEY PLAN:

SCALE	SHOP DRAWING	DATE
AS SHOWN		12/05/2023

REV	DATE	DSN	CHK	APP	AMENDMENT DESCRIPTION	STATUS
B	12/05/2023	M.KH	M.KH	DR.M.M	ISSUED FOR INFORMATION	IFI

DRAWING TITLE

6TH OF OCTOBER MONORAIL
SERVICE WALKWAYS
ZONE (1008)
Z8-HR041

Project Code	Rubric	Initiator	Lot	Ref	Number	Revision
93M	0476	ACC	600	DEP	DWG	08461	B

Tekla structures

approval is subject to approval of coordination package between multi-discipline

REVIEWED WITH COMMENT
MONORAILS PROJECT

All holes are 22mm U.N.O Length & Area & Weight per piece						
Z8-HR040	CHS48.3*4.0	S235JR	1	3789.6	0.57	16.6
Mark	Profile	Grade	QTY	Length	Area	Weight

Z8-HR040

3790

1 REQ'D AS DRAWN MK'D Z8-HR040

6 October Monorail
Engineering Unit
Valid For Construction

GENERAL NOTES:

1. THE DIMENSIONS SHOWN ARE NOMINAL (IN MILLIMETERS), U.N.O.
2. WELD SIZESHALL BE AISC MINIMUM OF 6 mm UNLESS NOTED OTHERWISE.
3. ALL FIELD WELDS SHALL BE INSPECTED PER QUALITY ASSURANCE AND SPECIAL INSPECTIONS.

REFERENCE DRAWINGS

1	93M-BOA-NAT-LOT-04833
2	93M-BOA-NAT-LOT-09170
3	93M-BOA-NAT-LOT-01976
4	93M-BOA-NAT-LOT-20021
5	
6	
7	
8	
9	

6TH OF OCTOBER CITY RAIL TRANSIT MONORAIL

The Authority — Hill International Consultant — Main Contractor — Structural Designer

KEY PLAN:

SCALE	SHOP DRAWING	DATE
AS SHOWN		12/05/2023

REV	DATE	DSN	CHK	APP	AMENDMENTS DESCRIPTION	STATUS
B	12/05/2023	M.KH	M.KH	DR.M.M	ISSUED FOR INFORMATION	IFI

DRAWING TITLE

6TH OF OCTOBER MONORAIL
SERVICE WALKWAYS
ZONE (1008)
Z8-HR040

Project Code	Rubric	Initiator	Lot	Ref	Number	Revision
93M	0476	ACC	600	DEP	DWG	08462	B

Tekla structures

approval is subject to approval of coordination package between multi-discipline

REVIEWED WITH COMMENT
MONORAILS PROJECT

All holes are 22mm U.N.O Length & Area & Weight per piece

Mark	Profile	Grade	QTY	Length	Area	Weight
Z8-HR039	CHS48.3*4.0	S235JR	1	5756.5	0.86	25.2

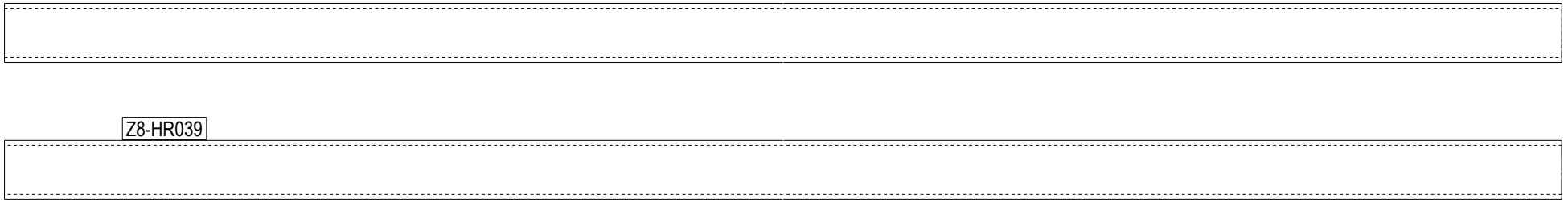

1 REQ'D AS DRAWN MK'D Z8-HR039

6 October Monorail
Engineering Unit
Valid For Construction

GENERAL NOTES:

1. THE DIMENSIONS SHOWN ARE NOMINAL (IN MILLIMETERS), U.N.O.
2. WELD SIZESHALL BE AISC MINIMUM OF 6 mm UNLESS NOTED OTHERWISE.
3. ALL FIELD WELDS SHALL BE INSPECTED PER QUALITY ASSURANCE AND SPECIAL INSPECTIONS.

REFERENCE DRAWINGS

1	93M-BOA-NAT-LOT-04833
2	93M-BOA-NAT-LOT-09170
3	93M-BOA-NAT-LOT-01976
4	93M-BOA-NAT-LOT-20021
5	
6	
7	
8	
9	

6TH OF OCTOBER CITY RAIL TRANSIT MONORAIL

The Authority — Hill International Consultant — Main Contractor — Structural Designer

KEY PLAN:

REV	DATE	DSG	CHK	APP	AMENDMENTS	STATUS
B	12/05/2023	M.KH	M.KH	DR.M.M	ISSUED FOR INFORMATION	IFI
A	11/20/2022	M.KH	M.KH	DR.M.M	ISSUED FOR INFORMATION	IFI

SCALE AS SHOWN | SHOPDRAWING | DATE 12/05/2023

DRAWING TITLE
6TH OF OCTOBER MONORAIL
SERVICE WALKWAYS
ZONE (1008)
Z8-HR039

Project Code	Rubric	Initiator	Lot	Ref	Number	Revision
9 3 M	0 4 7 6	A C C	6 0	D E P	D W G	0 8 4 6 3	B

Tekla structures

approval is subject to approval of coordination package between multi-discipline

REVIEWED WITH COMMENT MONORAILS PROJECT

All holes are 22mm U.N.O Length & Area & Weight per piece						
Z8-HR038	CHS48.3*4.0	S235JR	1	3789.6	0.57	16.6
Mark	Profile	Grade	QTY	Length	Area	Weight

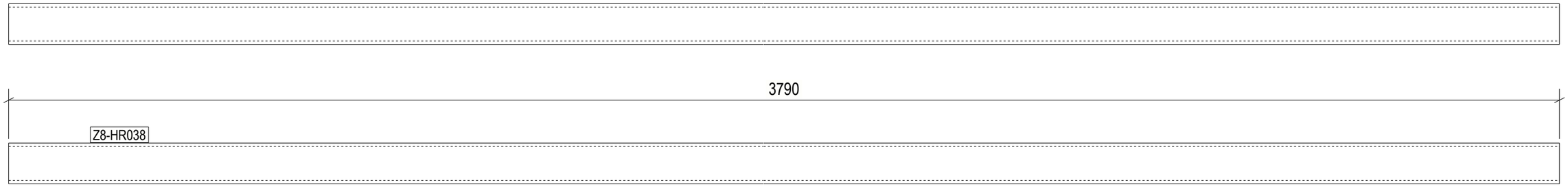

1 REQ'D AS DRAWN MK'D Z8-HR038

6 October Monorail Engineering Unit Valid For Construction

GENERAL NOTES:

1. THE DIMENSIONS SHOWN ARE NOMINAL (IN MILLIMETERS), U.N.O.
2. WELD SIZESHALL BE AISC MINIMUM OF 6 mm UNLESS NOTED OTHERWISE.
3. ALL FIELD WELDS SHALL BE INSPECTED PER QUALITY ASSURANCE AND SPECIAL INSPECTIONS.

REFERENCE DRAWINGS

1	93M-BOA-NAT-LOT-04833
2	93M-BOA-NAT-LOT-09170
3	93M-BOA-NAT-LOT-01976
4	93M-BOA-NAT-LOT-20021
5	
6	
7	
8	
9	

6TH OF OCTOBER CITY RAIL TRANSIT MONORAIL

The Authority | Hill International Consultant | ORASCOM BOMBARDIER Main Contractor | INNOVA Structural Designer

KEY PLAN:

SCALE	SHOP DRAWING	DATE
AS SHOWN		12/05/2023

REV	DATE	DSN	CHK	APP	AMENDMENTS	STATUS
B	12/05/2023	M.KH	M.KH	DR.M.M	ISSUED FOR INFORMATION	IFI

DRAWING TITLE

6TH OF OCTOBER MONORAIL SERVICE WALKWAYS ZONE (1008)
Z8-HR038

Project Code	Rubric	Initiator	Lot	Ref	Number	Revision
93M	0476	ACC	60DEP	DWG	08464	B

Tekla structures

approval is subject to approval of coordination package between multi-discipline

REVIEWED WITH COMMENT
MONORAILS PROJECT

All holes are 22mm U.N.O Length & Area & Weight per piece

Mark	Profile	Grade	QTY	Length	Area	Weight
Z8-HR037	CHS48.3*4.0	S235JR	1	1828.7	0.27	8.0

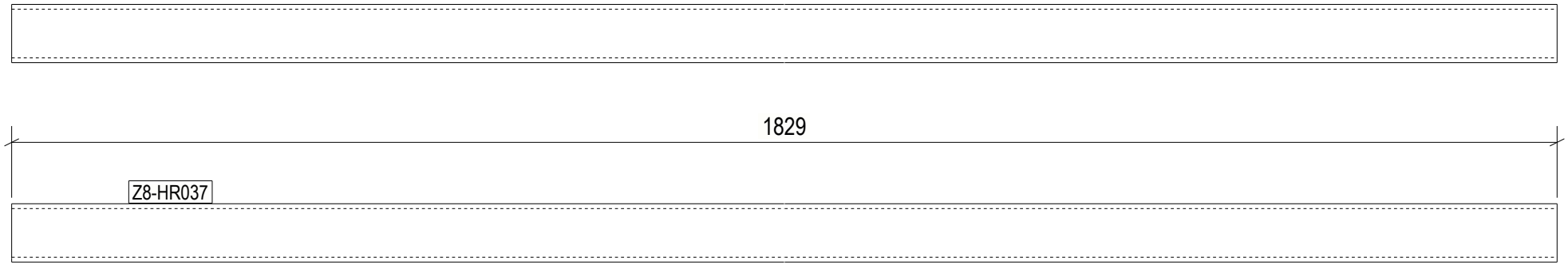

1 REQ'D AS DRAWN MK'D Z8-HR037

6 October Monorail
Engineering Unit
Valid For Construction

GENERAL NOTES:

1. THE DIMENSIONS SHOWN ARE NOMINAL (IN MILLIMETERS), U.N.O.
2. WELD SIZESHALL BE AISC MINIMUM OF 6 mm UNLESS NOTED OTHERWISE.
3. ALL FIELD WELDS SHALL BE INSPECTED PER QUALITY ASSURANCE AND SPECIAL INSPECTIONS.

REFERENCE DRAWINGS

1	93M-BOA-NAT-LOT-04833
2	93M-BOA-NAT-LOT-09170
3	93M-BOA-NAT-LOT-01976
4	93M-BOA-NAT-LOT-20021
5	
6	
7	
8	
9	

6TH OF OCTOBER CITY RAIL TRANSIT MONORAIL

The Authority — Hill International Consultant — Main Contractor — Structural Designer

KEY PLAN:

REV.	DATE	DSG	CHK	APP	AMENDMENTS	STATUS
B	12/05/2023	M.KH	M.KH	DR.M.M	ISSUED FOR INFORMATION	IFI
A	11/20/2022	M.KH	M.KH	DR.M.M	ISSUED FOR INFORMATION	IFI

SCALE AS SHOWN | SHOPDRAWING | DATE 12/05/2023

DRAWING TITLE
6TH OF OCTOBER MONORAIL
SERVICE WALKWAYS
ZONE (1008)
Z8-HR037

Project Code	Rubric	Initiator	Lot	Ref	Number	Revision
9 3 M	0 4 7 6	A C C	6 0	D E P	D W G	0 8 4 6 5	B

Tekla structures

approval is subject to approval of coordination package between multi-discipline

REVIEWED WITH COMMENT
MONORAILS PROJECT

All holes are 22mm U.N.O Length & Area & Weight per piece

Mark	Profile	Grade	QTY	Length	Area	Weight
Z8-HR036	CHS48.3*4.0	S235JR	1	1828.7	0.27	8.0

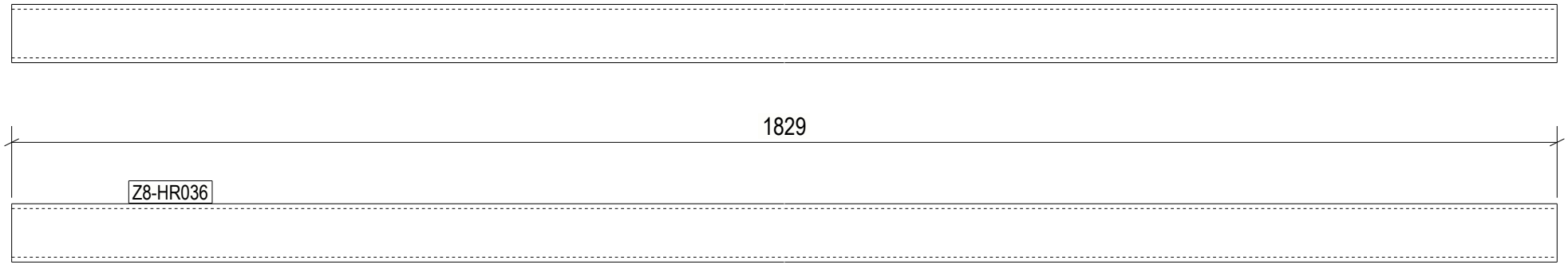

1 REQ'D AS DRAWN MK'D Z8-HR036

6 October Monorail
Engineering Unit
Valid For Construction

GENERAL NOTES:

1. THE DIMENSIONS SHOWN ARE NOMINAL (IN MILLIMETERS), U.N.O.
2. WELD SIZESHALL BE AISC MINIMUM OF 6 mm UNLESS NOTED OTHERWISE.
3. ALL FIELD WELDS SHALL BE INSPECTED PER QUALITY ASSURANCE AND SPECIAL INSPECTIONS.

REFERENCE DRAWINGS

1	93M-BOA-NAT-LOT-04833
2	93M-BOA-NAT-LOT-09170
3	93M-BOA-NAT-LOT-01976
4	93M-BOA-NAT-LOT-20021
5	
6	
7	
8	
9	

6TH OF OCTOBER CITY RAIL TRANSIT MONORAIL

The Authority — Hill International Consultant — Main Contractor — Structural Designer

KEY PLAN:

SCALE: AS SHOWN | SHOPDRAWING | DATE: 12/09/2023

REV	DATE	DSG	CHK	APP	AMENDMENTS	STATUS
B	12/05/2023	M.KH	M.KH	DR.M.M	ISSUED FOR INFORMATION	IFI
A	11/20/2022	M.KH	M.KH	DR.M.M	ISSUED FOR INFORMATION	IFI

DRAWING TITLE

6TH OF OCTOBER MONORAIL
SERVICE WALKWAYS
ZONE (1008)
Z8-HR036

Project Code	Rubric	Initiator	Lot	Ref	Number	Revision
93M	047	ACC	60DEP	DWG	08466	B

Tekla structures

approval is subject to approval of coordination package between multi-discipline

REVIEWED WITH COMMENT
MONORAILS PROJECT

All holes are 22mm U.N.O Length & Area & Weight per piece

Mark	Profile	Grade	QTY	Length	Area	Weight
Z8-HR035	CHS48.3*4.0	S235JR	1	3737.6	0.56	16.3

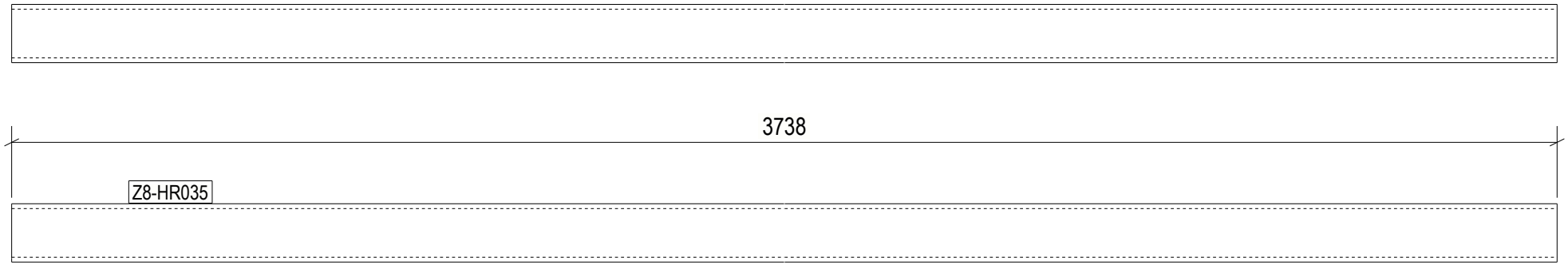

1 REQ'D AS DRAWN MK'D Z8-HR035

6 October Monorail
Engineering Unit
Valid For Construction

GENERAL NOTES:

1. THE DIMENSIONS SHOWN ARE NOMINAL (IN MILLIMETERS), U.N.O.
2. WELD SIZESHALL BE AISC MINIMUM OF 6 mm UNLESS NOTED OTHERWISE.
3. ALL FIELD WELDS SHALL BE INSPECTED PER QUALITY ASSURANCE AND SPECIAL INSPECTIONS.

REFERENCE DRAWINGS

1	93M-BOA-NAT-LOT-04833
2	93M-BOA-NAT-LOT-09170
3	93M-BOA-NAT-LOT-01976
4	93M-BOA-NAT-LOT-20021
5	
6	
7	
8	
9	

6TH OF OCTOBER CITY RAIL TRANSIT MONORAIL

The Authority — Hill International Consultant — Main Contractor — Structural Designer

KEY PLAN:

REV.	DATE	DSG	CHK	APP	AMENDMENTS	STATUS
B	12/05/2023	M.KH	M.KH	DR.BM	ISSUED FOR INFORMATION	IFI
A	11/20/2022	M.KH	M.KH	DR.BM	ISSUED FOR INFORMATION	IFI

SCALE: AS SHOWN | SHOPDRAWING | DATE: 12/05/2023

DRAWING TITLE
6TH OF OCTOBER MONORAIL
SERVICE WALKWAYS
ZONE (1008)
Z8-HR035

Project Code	Rubric	Initiator	Lot	Ref	Number	Revision
9 3 M	0 4 7 6	A C C	6 0 D E P	D W G	0 8 4 6 7	B

Tekla structures

approval is subject to approval of coordination package between multi-discipline

REVIEWED WITH COMMENT
MONORAILS PROJECT

All holes are 22mm U.N.O Length & Area & Weight per piece

Mark	Profile	Grade	QTY	Length	Area	Weight
Z8-HR034	CHS48.3*4.0	S235JR	1	2998.9	0.45	13.1

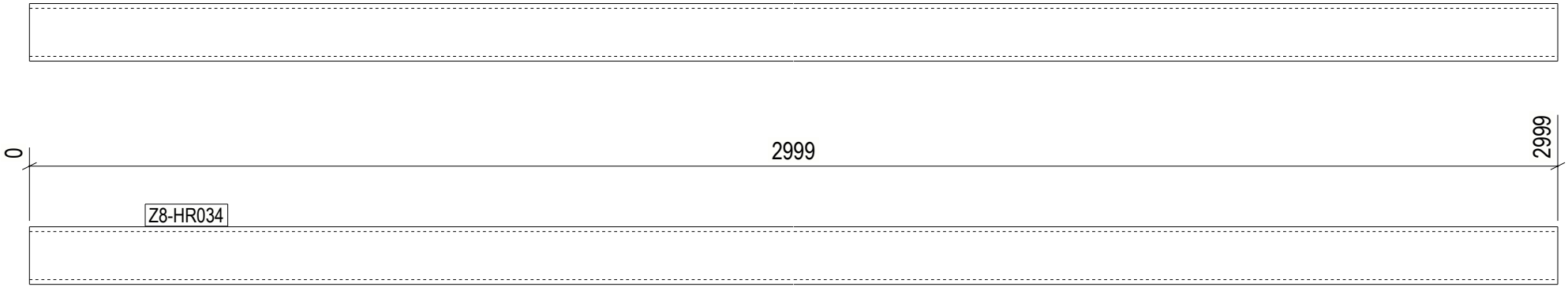

1 REQ'D AS DRAWN MK'D Z8-HR034

6 October Monorail
Engineering Unit
Valid For Construction

GENERAL NOTES:

1. THE DIMENSIONS SHOWN ARE NOMINAL (IN MILLIMETERS), U.N.O.
2. WELD SIZESHALL BE AISC MINIMUM OF 6 mm UNLESS NOTED OTHERWISE.
3. ALL FIELD WELDS SHALL BE INSPECTED PER QUALITY ASSURANCE AND SPECIAL INSPECTIONS.

REFERENCE DRAWINGS

1	93M-BOA-NAT-LOT-04833
2	93M-BOA-NAT-LOT-09170
3	93M-BOA-NAT-LOT-01976
4	93M-BOA-NAT-LOT-20021
5	
6	
7	
8	
9	

6TH OF OCTOBER CITY RAIL TRANSIT MONORAIL

The Authority — Hill International Consultant — Main Contractor — Structural Designer

KEY PLAN:

SCALE	SHOPDRAWING	DATE
AS SHOWN		12/09/2023

REV.	DATE	DSG	CHK	APP	AMENDMENTS	STATUS
B	12/05/2023	M.KH	M.KH	DR.BIM	ISSUED FOR INFORMATION	IFI
A	11/20/2022	M.KH	M.KH	DR.BIM	ISSUED FOR INFORMATION	IFI

DRAWING TITLE

6TH OF OCTOBER MONORAIL
SERVICE WALKWAYS
ZONE (1008)
Z8-HR034

Project Code	Rubric	Initiator	Lot	Ref	Number	Revision
93M	047	ACC	60DEP	DWG	08468	B

Tekla structures

approval is subject to approval of coordination package between multi-discipline

REVIEWED WITH COMMENT
MONORAILS PROJECT

All holes are 22mm U.N.O Length & Area & Weight per piece

Mark	Profile	Grade	QTY	Length	Area	Weight
Z8-HR033	CHS48.3*4.0	S235JR	1	2994.8	0.45	13.1

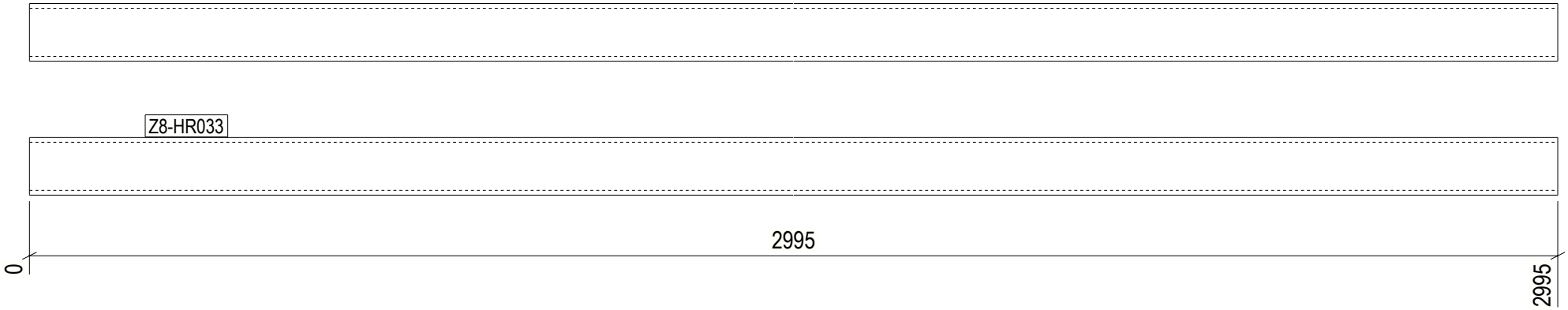

1 REQ'D AS DRAWN MK'D Z8-HR033

6 October Monorail
Engineering Unit
Valid For Construction

GENERAL NOTES:

1. THE DIMENSIONS SHOWN ARE NOMINAL (IN MILLIMETERS), U.N.O.
2. WELD SIZESHALL BE AISC MINIMUM OF 6 mm UNLESS NOTED OTHERWISE.
3. ALL FIELD WELDS SHALL BE INSPECTED PER QUALITY ASSURANCE AND SPECIAL INSPECTIONS.

REFERENCE DRAWINGS

1	93M-BOA-NAT-LOT-04833
2	93M-BOA-NAT-LOT-09170
3	93M-BOA-NAT-LOT-01976
4	93M-BOA-NAT-LOT-20021
5	
6	
7	
8	
9	

6TH OF OCTOBER CITY RAIL TRANSIT MONORAIL

The Authority | Hill International Consultant | Main Contractor | Structural Designer

KEY PLAN:

REV.	DATE	DSG	CHK	APP	AMENDMENTS	STATUS
B	12/05/2023	M.KH	M.KH	DR.M.M	ISSUED FOR INFORMATION	IFI
A	11/20/2022	M.KH	M.KH	DR.M.M	ISSUED FOR INFORMATION	IFI

SCALE: AS SHOWN | SHOPDRAWING | DATE: 12/05/2023

DRAWING TITLE
6TH OF OCTOBER MONORAIL
SERVICE WALKWAYS
ZONE (1008)
Z8-HR033

Project Code	Rubric	Initiator	Lot	Ref	Number	Revision
9 3 M	0 4 7 6	A C C	6 0 D	E P	D W G	0 8 4 6 9 B

Tekla structures

approval is subject to approval of coordination package between multi-discipline

REVIEWED WITH COMMENT
MONORAILS PROJECT

All holes are 22mm U.N.O Length & Area & Weight per piece

Mark	Profile	Grade	QTY	Length	Area	Weight
Z8-HR032	CHS48.3*4.0	S235JR	1	2852.3	0.43	12.5

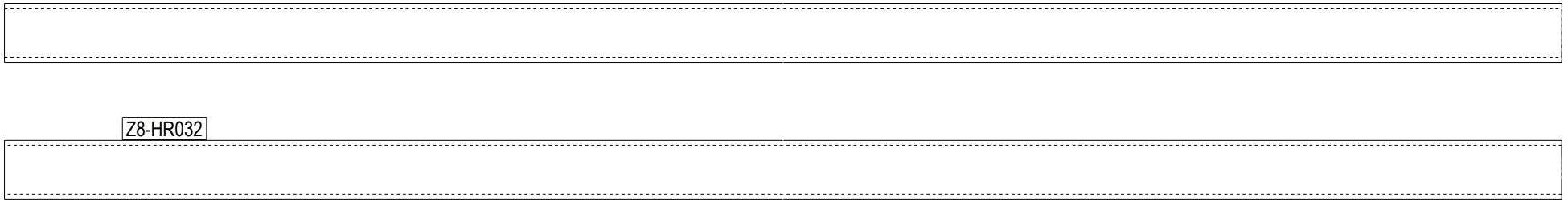

1 REQ'D AS DRAWN MK'D Z8-HR032

6 October Monorail
Engineering Unit
Valid For Construction

GENERAL NOTES:

1. THE DIMENSIONS SHOWN ARE NOMINAL (IN MILLIMETERS), U.N.O.
2. WELD SIZESHALL BE AISC MINIMUM OF 6 mm UNLESS NOTED OTHERWISE.
3. ALL FIELD WELDS SHALL BE INSPECTED PER QUALITY ASSURANCE AND SPECIAL INSPECTIONS.

REFERENCE DRAWINGS

1	93M-BOA-NAT-LOT-04833
2	93M-BOA-NAT-LOT-09170
3	93M-BOA-NAT-LOT-01976
4	93M-BOA-NAT-LOT-20021
5	
6	
7	
8	
9	

6TH OF OCTOBER CITY RAIL TRANSIT MONORAIL

The Authority | Hill International Consultant | Main Contractor | Structural Designer

KEY PLAN:

REV.	DATE	DSG	CHK	APP	AMENDMENTS	STATUS
B	12/05/2023	M.KH	M.KH	DR.M.M	ISSUED FOR INFORMATION	IFI
A	11/20/2022	M.KH	M.KH	DR.M.M	ISSUED FOR INFORMATION	IFI

SCALE AS SHOWN | SHOPDRAWING | DATE 12/05/2023

DRAWING TITLE
6TH OF OCTOBER MONORAIL
SERVICE WALKWAYS
ZONE (1008)
Z8-HR032

Project Code	Rubric	Initiator	Lot	Ref	Number	Revision
9 3 M	0 4 7 6	A C C	6 0 D E P	D W G	0 8 4 7 0	B

Tekla structures

approval is subject to approval of coordination package between multi-discipline

REVIEWED WITH COMMENT
MONORAILS PROJECT

All holes are 22mm U.N.O Length & Area & Weight per piece

Mark	Profile	Grade	QTY	Length	Area	Weight
Z8-HR031	CHS48.3*4.0	S235JR	1	5995.4	0.90	26.2

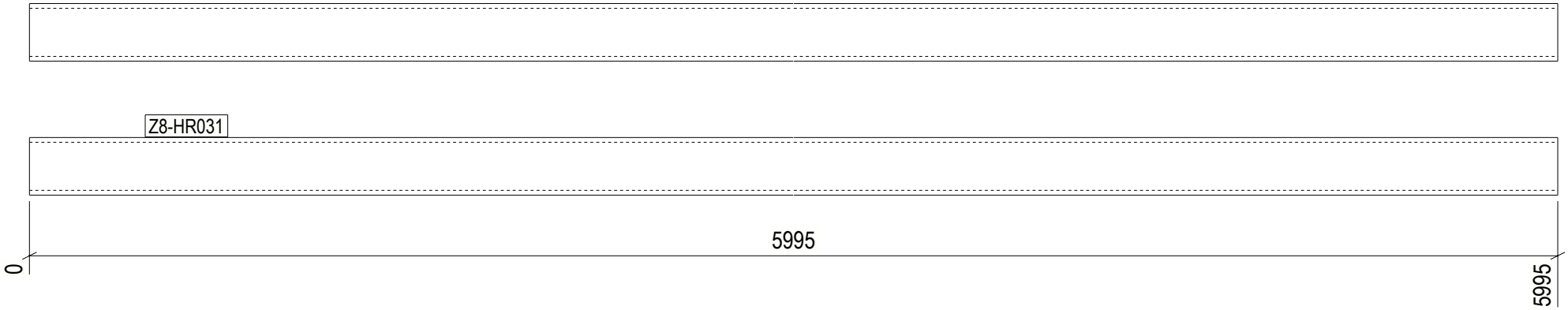

1 REQ'D AS DRAWN MK'D Z8-HR031

6 October Monorail
Engineering Unit
Valid For Construction

GENERAL NOTES:

1. THE DIMENSIONS SHOWN ARE NOMINAL (IN MILLIMETERS), U.N.O.
2. WELD SIZESHALL BE AISC MINIMUM OF 6 mm UNLESS NOTED OTHERWISE.
3. ALL FIELD WELDS SHALL BE INSPECTED PER QUALITY ASSURANCE AND SPECIAL INSPECTIONS.

REFERENCE DRAWINGS

1	93M-BOA-NAT-LOT-04833
2	93M-BOA-NAT-LOT-09170
3	93M-BOA-NAT-LOT-01976
4	93M-BOA-NAT-LOT-20021
5	
6	
7	
8	
9	

6TH OF OCTOBER CITY RAIL TRANSIT MONORAIL

The Authority | Hill International Consultant | Main Contractor | Structural Designer

KEY PLAN:

SCALE	SHOPDRAWING	DATE
AS SHOWN		12/09/2023

REV.	DATE	DSG.	CHK.	APP.	AMENDMENTS	STATUS
B	12/05/2023	M.KH	M.KH	DR.M.M	ISSUED FOR INFORMATION	IFI
A	11/20/2022	M.KH	M.KH	DR.M.M	ISSUED FOR INFORMATION	IFI

DRAWING TITLE

6TH OF OCTOBER MONORAIL
SERVICE WALKWAYS
ZONE (1008)
Z8-HR031

Project Code	Rubric	Initiator	Lot	Ref	Number	Revision
9 3 M	0 4 7 6	A C C	6 0 D E P	D W G	0 8 4 7 1	B

Tekla structures

approval is subject to approval of coordination package between multi-discipline

REVIEWED WITH COMMENT
MONORAILS PROJECT

All holes are 22mm U.N.O Length & Area & Weight per piece

Mark	Profile	Grade	QTY	Length	Area	Weight
Z8-HR030	CHS48.3*4.0	S235JR	1	3996.4	0.60	17.5

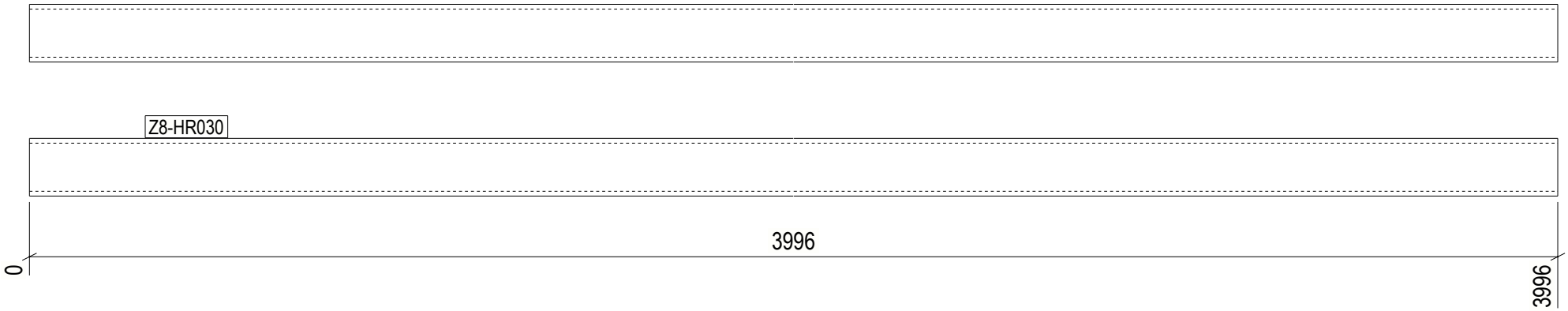

1 REQ'D AS DRAWN MK'D Z8-HR030

6 October Monorail
Engineering Unit
Valid For Construction

GENERAL NOTES:

1. THE DIMENSIONS SHOWN ARE NOMINAL (IN MILLIMETERS), U.N.O.
2. WELD SIZESHALL BE AISC MINIMUM OF 6 mm UNLESS NOTED OTHERWISE.
3. ALL FIELD WELDS SHALL BE INSPECTED PER QUALITY ASSURANCE AND SPECIAL INSPECTIONS.

REFERENCE DRAWINGS

1	93M-BOA-NAT-LOT-04833
2	93M-BOA-NAT-LOT-09170
3	93M-BOA-NAT-LOT-01976
4	93M-BOA-NAT-LOT-20021
5	
6	
7	
8	
9	

6TH OF OCTOBER CITY RAIL TRANSIT MONORAIL

The Authority — Hill International Consultant — Main Contractor — Structural Designer

KEY PLAN:

REV.	DATE	DSG	CHK	APP	AMENDMENTS	STATUS
B	12/05/2023	M.KH	M.KH	DR.M.M	ISSUED FOR INFORMATION	IFI
A	11/20/2022	M.KH	M.KH	DR.M.M	ISSUED FOR INFORMATION	IFI

SCALE: AS SHOWN | SHOPDRAWING | DATE: 12/05/2023

DRAWING TITLE
6TH OF OCTOBER MONORAIL
SERVICE WALKWAYS
ZONE (1008)
Z8-HR030

Project Code	Rubric	Initiator	Lot	Ref	Number	Revision
93M	047	6ACC	60DEP	DWG	0847	B

Tekla structures

approval is subject to approval of coordination package between multi-discipline

REVIEWED WITH COMMENT
MONORAILS PROJECT

All holes are 22mm U.N.O Length & Area & Weight per piece

Mark	Profile	Grade	QTY	Length	Area	Weight
Z8-HR029	CHS48.3*4.0	S235JR	1	4999.0	0.75	21.9

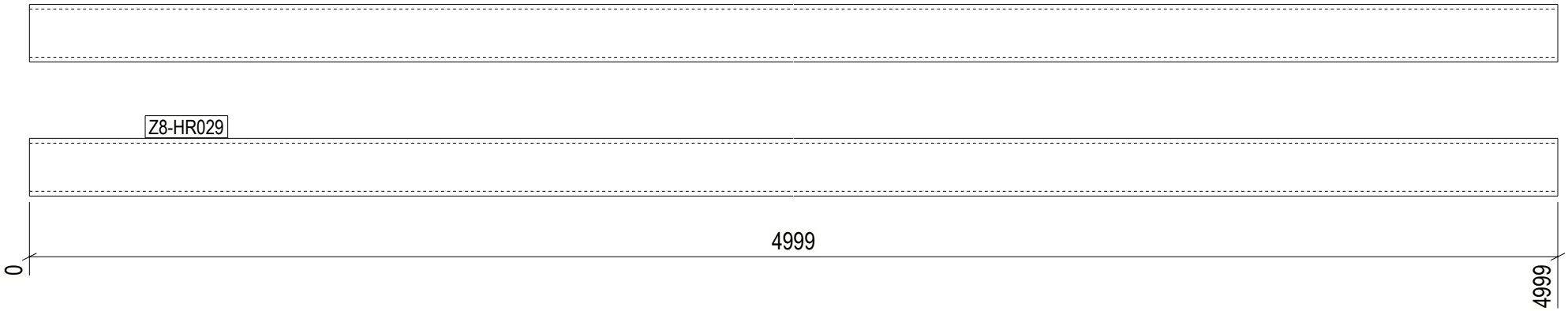

1 REQ'D AS DRAWN MK'D Z8-HR029

6 October Monorail
Engineering Unit
Valid For Construction

GENERAL NOTES:

1. THE DIMENSIONS SHOWN ARE NOMINAL (IN MILLIMETERS), U.N.O.
2. WELD SIZESHALL BE AISC MINIMUM OF 6 mm UNLESS NOTED OTHERWISE.
3. ALL FIELD WELDS SHALL BE INSPECTED PER QUALITY ASSURANCE AND SPECIAL INSPECTIONS.

REFERENCE DRAWINGS

1	93M-BOA-NAT-LOT-04833
2	93M-BOA-NAT-LOT-09170
3	93M-BOA-NAT-LOT-01976
4	93M-BOA-NAT-LOT-20021
5	
6	
7	
8	
9	

6TH OF OCTOBER CITY RAIL TRANSIT MONORAIL

The Authority — Hill International Consultant — Main Contractor — Structural Designer

KEY PLAN:

SCALE	SHOPDRAWING	DATE
AS SHOWN		12/09/2023

REV	DATE	DSG	CHK	APP	AMENDMENTS	STATUS
B	12/05/2023	M.KH	M.KH	DR.M.M	ISSUED FOR INFORMATION	IFI
A	11/20/2022	M.KH	M.KH	DR.M.M	ISSUED FOR INFORMATION	IFI

DRAWING TITLE

6TH OF OCTOBER MONORAIL
SERVICE WALKWAYS
ZONE (1008)
Z8-HR029

Project Code	Rubric	Initiator	Lot	Ref	Number	Revision
9 3 M	0 4 7 6	A C C	6 0 D E P	D W G	0 8 4 7 3	B

Tekla structures

All holes are 22mm U.N.O Length & Area & Weight per piece

Mark	Profile	Grade	QTY	Length	Area	Weight
Z8-HR028	CHS48.3*4.0	S235JR	1	5986.6	0.90	26.2

approval is subject to approval of coordination package between multi-discipline

REVIEWED WITH COMMENT
MONORAILS PROJECT

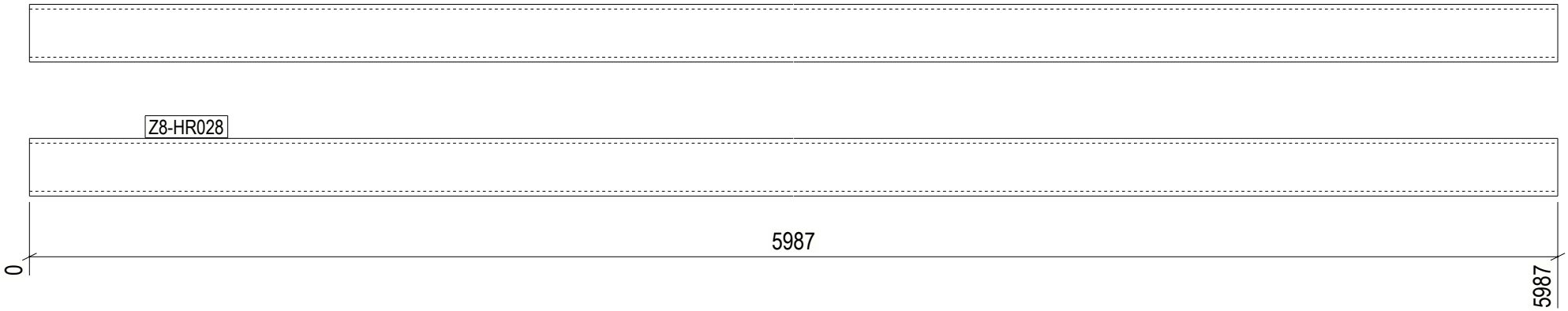

1 REQ'D AS DRAWN MK'D Z8-HR028

6 October Monorail
Engineering Unit
Valid For Construction

GENERAL NOTES:

1. THE DIMENSIONS SHOWN ARE NOMINAL (IN MILLIMETERS), U.N.O.
2. WELD SIZESHALL BE AISC MINIMUM OF 6 mm UNLESS NOTED OTHERWISE.
3. ALL FIELD WELDS SHALL BE INSPECTED PER QUALITY ASSURANCE AND SPECIAL INSPECTIONS.

REFERENCE DRAWINGS

1	93M-BOA-NAT-LOT-04833
2	93M-BOA-NAT-LOT-09170
3	93M-BOA-NAT-LOT-01976
4	93M-BOA-NAT-LOT-20021
5	
6	
7	
8	
9	

6TH OF OCTOBER CITY RAIL TRANSIT MONORAIL

The Authority | Hill International Consultant | Main Contractor | Structural Designer

KEY PLAN:

REV.	DATE	DSG	CHK	APP	AMENDMENTS	STATUS
B	12/05/2023	M.KH	M.KH	DR.M.M	ISSUED FOR INFORMATION	IFI
A	11/20/2022	M.KH	M.KH	DR.M.M	ISSUED FOR INFORMATION	IFI

SCALE: AS SHOWN | SHOPDRAWING | DATE: 12/05/2023

DRAWING TITLE
6TH OF OCTOBER MONORAIL
SERVICE WALKWAYS
ZONE (1008)
Z8-HR028

Project Code	Rubric	Initiator	Lot	Ref	Number	Revision
9 3 M	0 4 7 6	A C C	6 0 D E P	D W G	0 8 4 7 4	B

Tekla structures

approval is subject to approval of coordination package between multi-discipline

REVIEWED WITH COMMENT
MONORAILS PROJECT

All holes are 22mm U.N.O Length & Area & Weight per piece

Mark	Profile	Grade	QTY	Length	Area	Weight
Z8-HR027	CHS48.3*4.0	S235JR	1	2849.3	0.43	12.5

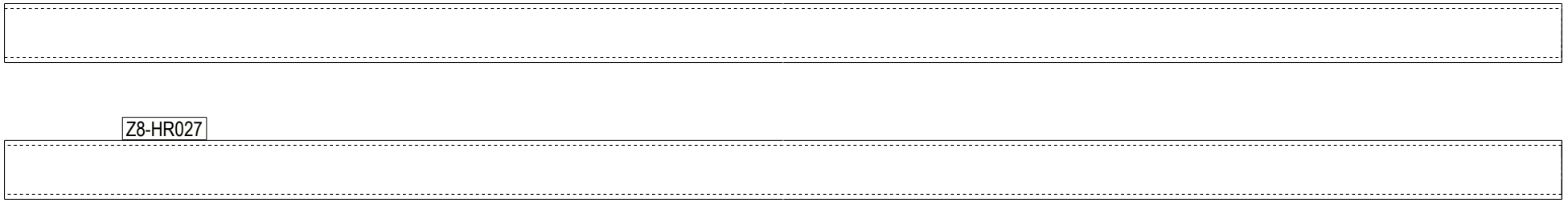

1 REQ'D AS DRAWN MK'D Z8-HR027

6 October Monorail
Engineering Unit
Valid For Construction

GENERAL NOTES:

1. THE DIMENSIONS SHOWN ARE NOMINAL (IN MILLIMETERS), U.N.O.
2. WELD SIZESHALL BE AISC MINIMUM OF 6 mm UNLESS NOTED OTHERWISE.
3. ALL FIELD WELDS SHALL BE INSPECTED PER QUALITY ASSURANCE AND SPECIAL INSPECTIONS.

REFERENCE DRAWINGS

1	93M-BOA-NAT-LOT-04833
2	93M-BOA-NAT-LOT-09170
3	93M-BOA-NAT-LOT-01976
4	93M-BOA-NAT-LOT-20021
5	
6	
7	
8	
9	

6TH OF OCTOBER CITY RAIL TRANSIT MONORAIL

The Authority — Hill International Consultant — Main Contractor — Structural Designer

KEY PLAN:

SCALE: AS SHOWN | SHOPDRAWING | DATE: 12/09/2023

REV.	DATE	DSG	CHK	APP	AMENDMENTS	STATUS
B	12/05/2023	M.KH	M.KH	DR.BUM	ISSUED FOR INFORMATION	IFI
A	11/20/2022	M.KH	M.KH	DR.BUM	ISSUED FOR INFORMATION	IFI

DRAWING TITLE

6TH OF OCTOBER MONORAIL
SERVICE WALKWAYS
ZONE (1008)
Z8-HR027

Project Code	Rubric	Initiator	Lot	Ref	Number	Revision
9 3 M	0 4 7 6	A C C	6 0 D E P	D W G	0 8 4 7 5	B

Tekla structures

approval is subject to approval of coordination package between multi-discipline

REVIEWED WITH COMMENT
MONORAILS PROJECT

All holes are 22mm U.N.O Length & Area & Weight per piece

Mark	Profile	Grade	QTY	Length	Area	Weight
Z8-HR026	CHS48.3*4.0	S235JR	1	2976.7	0.45	13.0

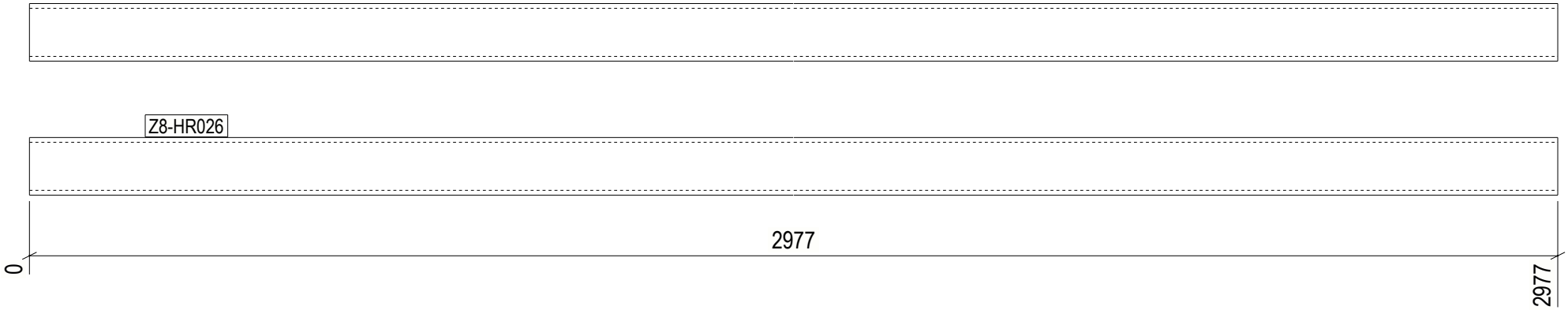

1 REQ'D AS DRAWN MK'D Z8-HR026

6 October Monorail
Engineering Unit
Valid For Construction

GENERAL NOTES:

1. THE DIMENSIONS SHOWN ARE NOMINAL (IN MILLIMETERS), U.N.O.
2. WELD SIZESHALL BE AISC MINIMUM OF 6 mm UNLESS NOTED OTHERWISE.
3. ALL FIELD WELDS SHALL BE INSPECTED PER QUALITY ASSURANCE AND SPECIAL INSPECTIONS.

REFERENCE DRAWINGS

1	93M-BOA-NAT-LOT-04833
2	93M-BOA-NAT-LOT-09170
3	93M-BOA-NAT-LOT-01976
4	93M-BOA-NAT-LOT-20021
5	
6	
7	
8	
9	

6TH OF OCTOBER CITY RAIL TRANSIT MONORAIL

The Authority — Hill International Consultant — Main Contractor — Structural Designer

KEY PLAN:

REV.	DATE	DSG	CHK	APP	AMENDMENTS	STATUS
B	12/05/2023	M.KH	M.KH	DR.M.M	ISSUED FOR INFORMATION	IFI
A	11/20/2022	M.KH	M.KH	DR.M.M	ISSUED FOR INFORMATION	IFI

SCALE: AS SHOWN | SHOPDRAWING | DATE: 12/05/2023

DRAWING TITLE
6TH OF OCTOBER MONORAIL
SERVICE WALKWAYS
ZONE (1008)
Z8-HR026

Project Code	Rubric	Initiator	Lot	Ref	Number	Revision
93M	047	ACC	60	DEP	DWG	08476	B

Tekla structures

approval is subject to approval of coordination package between multi-discipline

REVIEWED WITH COMMENT MONORAILS PROJECT

All holes are 22mm U.N.O Length & Area & Weight per piece

Mark	Profile	Grade	QTY	Length	Area	Weight
Z8-HR025	CHS48.3*4.0	S235JR	1	1972.6	0.30	8.6

Z8-HR025

1 REQ'D AS DRAWN MK'D Z8-HR025

6 October Monorail Engineering Unit Valid For Construction

Tekla structures

GENERAL NOTES:

1. THE DIMENSIONS SHOWN ARE NOMINAL (IN MILLIMETERS), U.N.O.
2. WELD SIZESHALL BE AISC MINIMUM OF 6 mm UNLESS NOTED OTHERWISE.
3. ALL FIELD WELDS SHALL BE INSPECTED PER QUALITY ASSURANCE AND SPECIAL INSPECTIONS.

REFERENCE DRAWINGS

1	93M-BOA-NAT-LOT-04833
2	93M-BOA-NAT-LOT-09170
3	93M-BOA-NAT-LOT-01976
4	93M-BOA-NAT-LOT-20021
5	
6	
7	
8	
9	

6TH OF OCTOBER CITY RAIL TRANSIT MONORAIL

The Authority — Hill International Consultant — Main Contractor — Structural Designer

KEY PLAN:

REV.	DATE	DSG	CHK	APP	AMENDMENTS	STATUS
B	12/05/2023	M.KH	M.KH	DR.M.M	ISSUED FOR INFORMATION	IFI
A	11/20/2022	M.KH	M.KH	DR.M.M	ISSUED FOR INFORMATION	IFI

SCALE AS SHOWN | SHOPDRAWING | DATE 12/05/2023

DRAWING TITLE

6TH OF OCTOBER MONORAIL SERVICE WALKWAYS ZONE (1008) Z8-HR025

Project Code	Rubric	Initiator	Lot	Ref	Number	Revision
9 3 M	0 4 7 6	A C C	6 0	D E P	D W G	0 8 4 7 7	B

approval is subject to approval of coordination package between multi-discipline

REVIEWED WITH COMMENT
MONORAILS PROJECT

All holes are 22mm U.N.O Length & Area & Weight per piece

Mark	Profile	Grade	QTY	Length	Area	Weight
Z8-HR024	CHS48.3*4.0	S235JR	1	2827.1	0.42	12.4

Z8-HR024

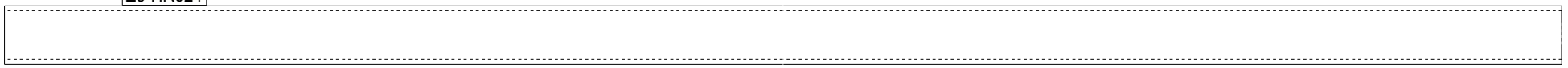

1 REQ'D AS DRAWN MK'D Z8-HR024

6 October Monorail
Engineering Unit
Valid For Construction

GENERAL NOTES:

1. THE DIMENSIONS SHOWN ARE NOMINAL (IN MILLIMETERS), U.N.O.
2. WELD SIZESHALL BE AISC MINIMUM OF 6 mm UNLESS NOTED OTHERWISE.
3. ALL FIELD WELDS SHALL BE INSPECTED PER QUALITY ASSURANCE AND SPECIAL INSPECTIONS.

REFERENCE DRAWINGS

1	93M-BOA-NAT-LOT-04833
2	93M-BOA-NAT-LOT-09170
3	93M-BOA-NAT-LOT-01976
4	93M-BOA-NAT-LOT-20021
5	
6	
7	
8	
9	

6TH OF OCTOBER CITY RAIL TRANSIT MONORAIL

The Authority — Hill International Consultant — Main Contractor — Structural Designer

KEY PLAN:

SCALE: AS SHOWN | SHOPDRAWING | DATE: 12/09/2023

REV.	DATE	DSG	CHK	APP	AMENDMENTS	STATUS
B	12/05/2023	M.KH	M.KH	DR.M.M	ISSUED FOR INFORMATION	IFI
A	11/20/2022	M.KH	M.KH	DR.M.M	ISSUED FOR INFORMATION	IFI

DRAWING TITLE

6TH OF OCTOBER MONORAIL
SERVICE WALKWAYS
ZONE (1008)
Z8-HR024

Project Code	Rubric	Initiator	Lot	Ref	Number	Revision
93M	047	ACC	60	DEP	DWG	0847	B

Tekla structures

All holes are 22mm U.N.O Length & Area & Weight per piece

Mark	Profile	Grade	QTY	Length	Area	Weight
Z8-HR023	CHS48.3*4.0	S235JR	1	1803.0	0.27	7.9

approval is subject to approval of coordination package between multi-discipline

REVIEWED WITH COMMENT
MONORAILS PROJECT

Z8-HR023

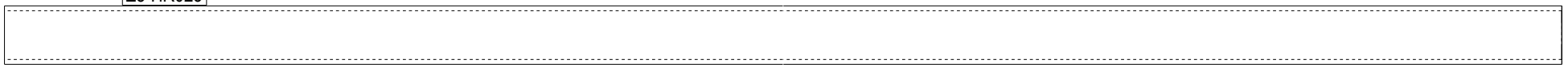

1 REQ'D AS DRAWN MK'D Z8-HR023

6 October Monorail
Engineering Unit
Valid For Construction

GENERAL NOTES:

1. THE DIMENSIONS SHOWN ARE NOMINAL (IN MILLIMETERS), U.N.O.
2. WELD SIZESHALL BE AISC MINIMUM OF 6 mm UNLESS NOTED OTHERWISE.
3. ALL FIELD WELDS SHALL BE INSPECTED PER QUALITY ASSURANCE AND SPECIAL INSPECTIONS.

REFERENCE DRAWINGS

1	93M-BOA-NAT-LOT-04833
2	93M-BOA-NAT-LOT-09170
3	93M-BOA-NAT-LOT-01976
4	93M-BOA-NAT-LOT-20021
5	
6	
7	
8	
9	

6TH OF OCTOBER CITY RAIL TRANSIT MONORAIL

The Authority — Hill International Consultant — Main Contractor — Structural Designer

KEY PLAN:

REV	DATE	DSG	CHK	APP	AMENDMENTS	STATUS
B	12/05/2023	M.KH	M.KH	DR.M.M	ISSUED FOR INFORMATION	IFI
A	11/20/2022	M.KH	M.KH	DR.M.M	ISSUED FOR INFORMATION	IFI

SCALE AS SHOWN | SHOPDRAWING | DATE 12/05/2023

DRAWING TITLE
6TH OF OCTOBER MONORAIL
SERVICE WALKWAYS
ZONE (1008)
Z8-HR023

Project Code	Rubric	Initiator	Lot	Ref	Number	Revision
9 3 M	0 4 7 6	A C C	6 0 D E	P D W	G 0 8 4 7 9	B

Tekla structures

approval is subject to approval of coordination package between multi-discipline

REVIEWED WITH COMMENT
MONORAILS PROJECT

All holes are 22mm U.N.O Length & Area & Weight per piece

Mark	Profile	Grade	QTY	Length	Area	Weight
Z8-HR022	CHS48.3*4.0	S235JR	1	2752.3	0.41	12.0

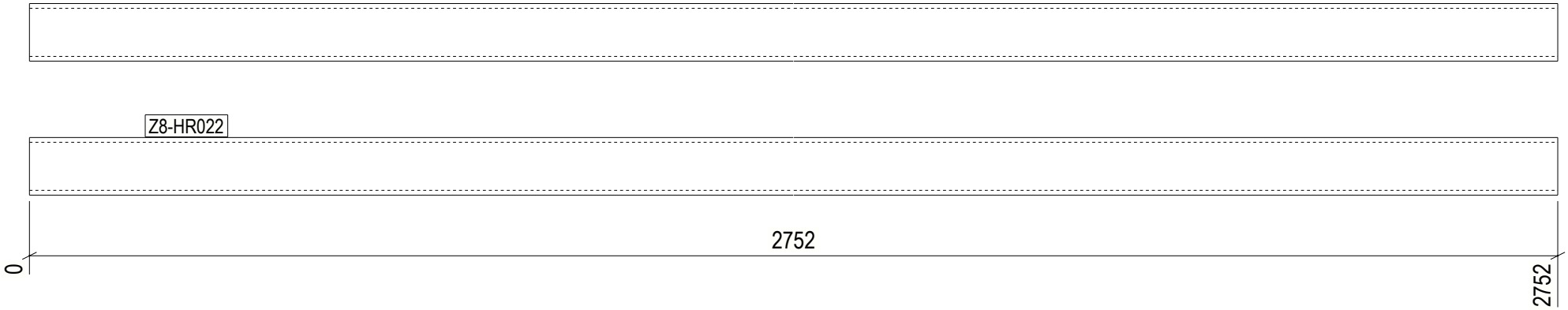

1 REQ'D AS DRAWN MK'D Z8-HR022

6 October Monorail
Engineering Unit
Valid For Construction

GENERAL NOTES:

1. THE DIMENSIONS SHOWN ARE NOMINAL (IN MILLIMETERS), U.N.O.
2. WELD SIZESHALL BE AISC MINIMUM OF 6 mm UNLESS NOTED OTHERWISE.
3. ALL FIELD WELDS SHALL BE INSPECTED PER QUALITY ASSURANCE AND SPECIAL INSPECTIONS.

REFERENCE DRAWINGS

1	93M-BOA-NAT-LOT-04833
2	93M-BOA-NAT-LOT-09170
3	93M-BOA-NAT-LOT-01976
4	93M-BOA-NAT-LOT-20021
5	
6	
7	
8	
9	

6TH OF OCTOBER CITY RAIL TRANSIT MONORAIL

The Authority — Hill International Consultant — Main Contractor — Structural Designer

KEY PLAN:

REV.	DATE	DSG	CHK	APP	AMENDMENTS	STATUS
B	12/05/2023	M.KH	M.KH	DR.M.M	ISSUED FOR INFORMATION	IFI
A	11/20/2022	M.KH	M.KH	DR.M.M	ISSUED FOR INFORMATION	IFI

SCALE: AS SHOWN | SHOPDRAWING | DATE: 12/05/2023

DRAWING TITLE
6TH OF OCTOBER MONORAIL
SERVICE WALKWAYS
ZONE (1008)
Z8-HR022

Project Code	Rubric	Initiator	Lot	Ref	Number	Revision
9 3 M	0 4 7 6	A C C	6 0 D	E P	D W G	0 8 4 8 0	B

Tekla structures

approval is subject to approval of coordination package between multi-discipline

REVIEWED WITH COMMENT
MONORAILS PROJECT

All holes are 22mm U.N.O Length & Area & Weight per piece

Mark	Profile	Grade	QTY	Length	Area	Weight
Z8-HR021	CHS48.3*4.0	S235JR	1	4496.2	0.67	19.7

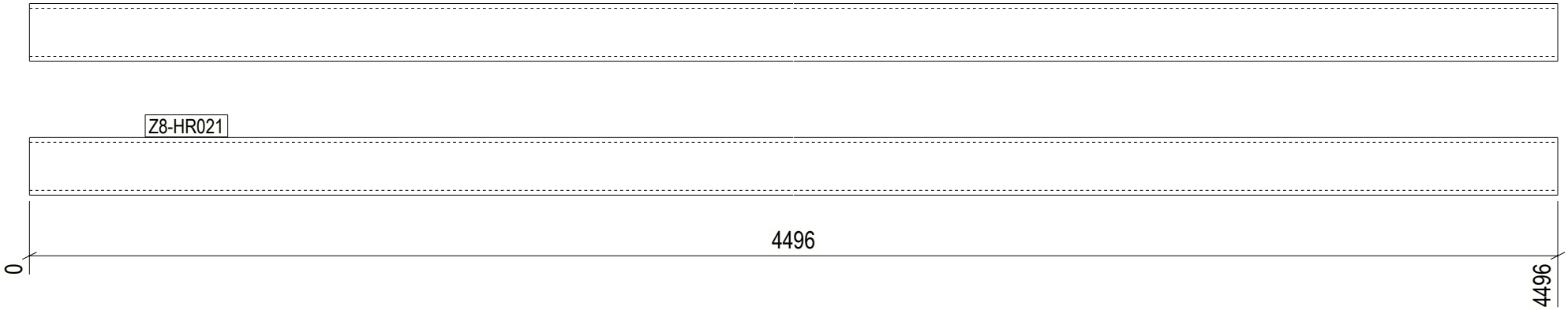

1 REQ'D AS DRAWN MK'D Z8-HR021

6 October Monorail
Engineering Unit
Valid For Construction

GENERAL NOTES:

1. THE DIMENSIONS SHOWN ARE NOMINAL (IN MILLIMETERS), U.N.O.
2. WELD SIZESHALL BE AISC MINIMUM OF 6 mm UNLESS NOTED OTHERWISE.
3. ALL FIELD WELDS SHALL BE INSPECTED PER QUALITY ASSURANCE AND SPECIAL INSPECTIONS.

REFERENCE DRAWINGS

1	93M-BOA-NAT-LOT-04833
2	93M-BOA-NAT-LOT-09170
3	93M-BOA-NAT-LOT-01976
4	93M-BOA-NAT-LOT-20021
5	
6	
7	
8	
9	

6TH OF OCTOBER CITY RAIL TRANSIT MONORAIL

The Authority — Hill International Consultant — Main Contractor — Structural Designer

KEY PLAN:

SCALE	SHOPDRAWING	DATE
AS SHOWN		12/09/2023

REV	DATE	DSG	CHK	APP	AMENDMENTS	STATUS
B	12/05/2023	M.KH	M.KH	DR.M.M	ISSUED FOR INFORMATION	IFI
A	11/20/2022	M.KH	M.KH	DR.M.M	ISSUED FOR INFORMATION	IFI

DRAWING TITLE

6TH OF OCTOBER MONORAIL
SERVICE WALKWAYS
ZONE (1008)
Z8-HR021

Project Code	Rubric	Initiator	Lot	Ref	Number	Revision
9 3 M	0 4 7 6	A C C	6 0 D	E P	D W G	0 8 4 8 1	B

Tekla structures

approval is subject to approval of coordination package between multi-discipline

REVIEWED WITH COMMENT
MONORAILS PROJECT

All holes are 22mm U.N.O Length & Area & Weight per piece

Mark	Profile	Grade	QTY	Length	Area	Weight
Z8-HR020	CHS48.3*4.0	S235JR	1	4635.6	0.70	20.3

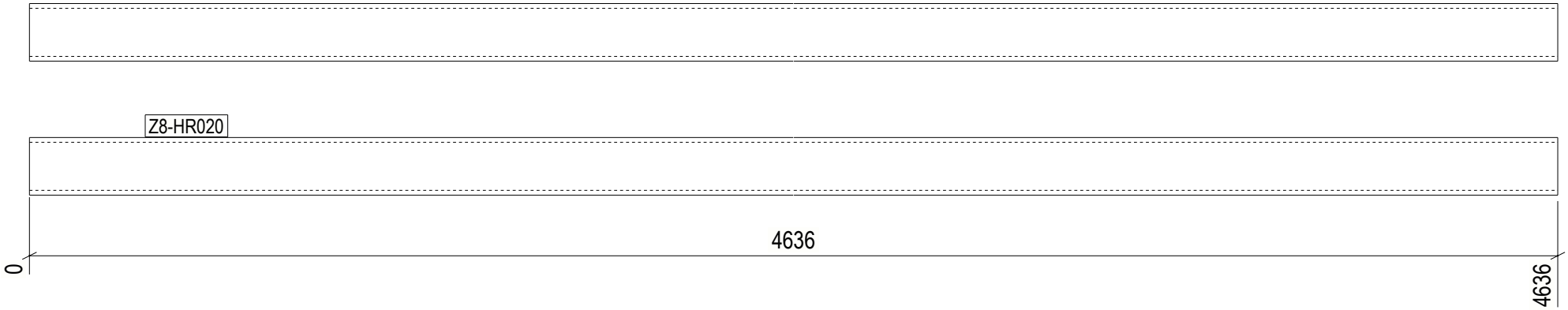

1 REQ'D AS DRAWN MK'D Z8-HR020

6 October Monorail
Engineering Unit
Valid For Construction

GENERAL NOTES:

1. THE DIMENSIONS SHOWN ARE NOMINAL (IN MILLIMETERS), U.N.O.
2. WELD SIZESHALL BE AISC MINIMUM OF 6 mm UNLESS NOTED OTHERWISE.
3. ALL FIELD WELDS SHALL BE INSPECTED PER QUALITY ASSURANCE AND SPECIAL INSPECTIONS.

REFERENCE DRAWINGS

1	93M-BOA-NAT-LOT-04833
2	93M-BOA-NAT-LOT-09170
3	93M-BOA-NAT-LOT-01976
4	93M-BOA-NAT-LOT-20021
5	
6	
7	
8	
9	

6TH OF OCTOBER CITY RAIL TRANSIT MONORAIL

The Authority | Hill International Consultant | Main Contractor | Structural Designer

KEY PLAN:

REV.	DATE	DSG	CHK	APP	AMENDMENTS	STATUS
B	12/05/2023	M.KH	M.KH	DR.M.M	ISSUED FOR INFORMATION	IFI
A	11/20/2022	M.KH	M.KH	DR.M.M	ISSUED FOR INFORMATION	IFI

SCALE: AS SHOWN | SHOPDRAWING | DATE: 12/05/2023

DRAWING TITLE
6TH OF OCTOBER MONORAIL
SERVICE WALKWAYS
ZONE (1008)
Z8-HR020

Project Code	Rubric	Initiator	Lot	Ref	Number	Revision
9 3 M	0 4 7 6	A C C	6 0 D E	P D W G	0 8 4 8 2	B

Tekla structures

approval is subject to approval of coordination package between multi-discipline

REVIEWED WITH COMMENT
MONORAILS PROJECT

All holes are 22mm U.N.O Length & Area & Weight per piece

Mark	Profile	Grade	QTY	Length	Area	Weight
Z8-HR019	CHS48.3*4.0	S235JR	1	2845.9	0.43	12.4

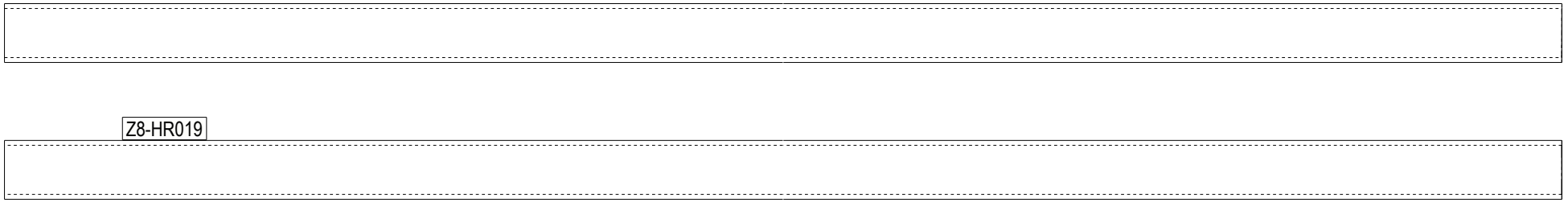

1 REQ'D AS DRAWN MK'D Z8-HR019

6 October Monorail
Engineering Unit
Valid For Construction

Tekla structures

GENERAL NOTES:

1. THE DIMENSIONS SHOWN ARE NOMINAL (IN MILLIMETERS), U.N.O.
2. WELD SIZESHALL BE AISC MINIMUM OF 6 mm UNLESS NOTED OTHERWISE.
3. ALL FIELD WELDS SHALL BE INSPECTED PER QUALITY ASSURANCE AND SPECIAL INSPECTIONS.

REFERENCE DRAWINGS

1	93M-BOA-NAT-LOT-04833
2	93M-BOA-NAT-LOT-09170
3	93M-BOA-NAT-LOT-01976
4	93M-BOA-NAT-LOT-20021
5	
6	
7	
8	
9	

6TH OF OCTOBER CITY RAIL TRANSIT MONORAIL

The Authority — Hill International Consultant — Main Contractor — Structural Designer

KEY PLAN:

SCALE	SHOPDRAWING	DATE
AS SHOWN		12/09/2023

REV	DATE	DSG	CHK	APP	AMENDMENTS	STATUS
B	12/05/2023	M.KH	M.KH	DR.M.M	ISSUED FOR INFORMATION	IFI
A	11/20/2022	M.KH	M.KH	DR.M.M	ISSUED FOR INFORMATION	IFI

DRAWING TITLE

6TH OF OCTOBER MONORAIL
SERVICE WALKWAYS
ZONE (1008)
Z8-HR019

Project Code	Rubric	Initiator	Lot	Ref	Number	Revision
9 3 M	0 4 7 6	A C C	6 0 D E P	D W G	0 8 4 8 3	B

All holes are 22mm U.N.O Length & Area & Weight per piece

Mark	Profile	Grade	QTY	Length	Area	Weight
Z8-HR018	CHS48.3*4.0	S235JR	1	5994.1	0.90	26.2

approval is subject to approval of coordination package between multi-discipline

REVIEWED WITH COMMENT
MONORAILS PROJECT

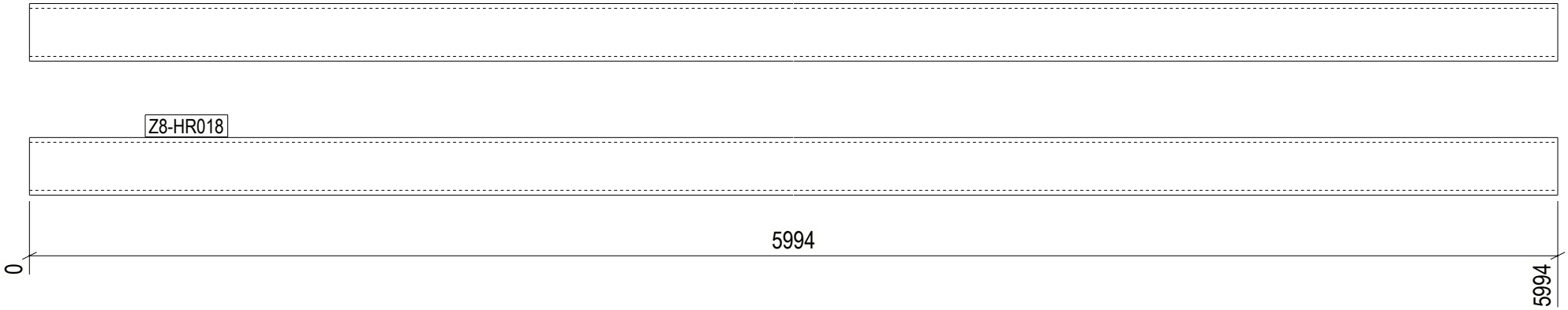

1 REQ'D AS DRAWN MK'D Z8-HR018

6 October Monorail
Engineering Unit
Valid For Construction

GENERAL NOTES:

1. THE DIMENSIONS SHOWN ARE NOMINAL (IN MILLIMETERS), U.N.O.
2. WELD SIZESHALL BE AISC MINIMUM OF 6 mm UNLESS NOTED OTHERWISE.
3. ALL FIELD WELDS SHALL BE INSPECTED PER QUALITY ASSURANCE AND SPECIAL INSPECTIONS.

REFERENCE DRAWINGS

1	93M-BOA-NAT-LOT-04833
2	93M-BOA-NAT-LOT-09170
3	93M-BOA-NAT-LOT-01976
4	93M-BOA-NAT-LOT-20021
5	
6	
7	
8	
9	

6TH OF OCTOBER CITY RAIL TRANSIT MONORAIL

The Authority | Hill International Consultant | Main Contractor | Structural Designer

KEY PLAN:

REV.	DATE	DSG	CHK	APP	AMENDMENTS	STATUS
B	12/05/2023	M.KH	M.KH	DR.M.M	ISSUED FOR INFORMATION	IFI
A	11/20/2022	M.KH	M.KH	DR.M.M	ISSUED FOR INFORMATION	IFI

SCALE: AS SHOWN | SHOPDRAWING | DATE: 12/05/2023

DRAWING TITLE
6TH OF OCTOBER MONORAIL
SERVICE WALKWAYS
ZONE (1008)
Z8-HR018

Project Code	Rubric	Initiator	Lot	Ref	Number	Revision
9 3 M	0 4 7 6	A C C	6 0 D E P	D W G	0 8 4 8 4	B

Tekla structures

approval is subject to approval of coordination package between multi-discipline

REVIEWED WITH COMMENT
MONORAILS PROJECT

All holes are 22mm U.N.O Length & Area & Weight per piece

Mark	Profile	Grade	QTY	Length	Area	Weight
Z8-HR017	CHS48.3*4.0	S235JR	1	5000.3	0.75	21.9

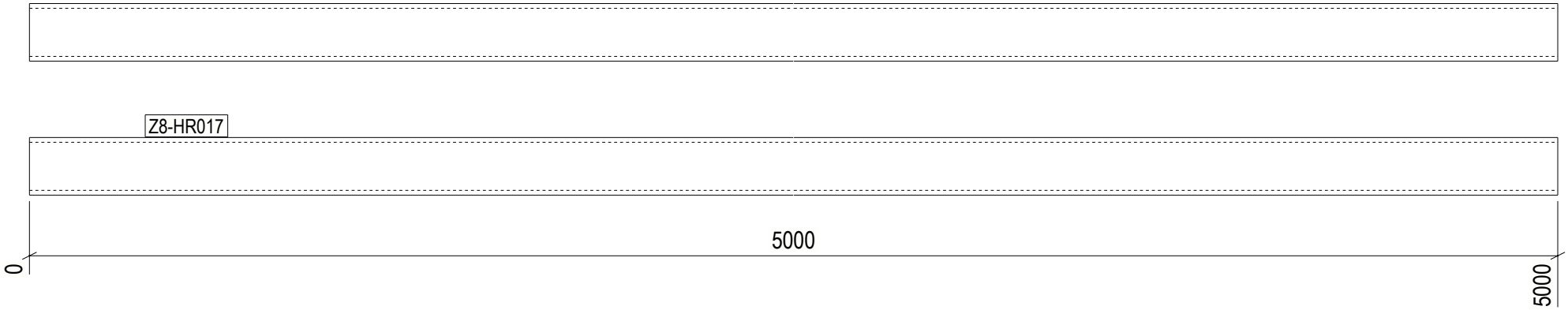

1 REQ'D AS DRAWN MK'D Z8-HR017

6 October Monorail
Engineering Unit
Valid For Construction

GENERAL NOTES:

1. THE DIMENSIONS SHOWN ARE NOMINAL (IN MILLIMETERS), U.N.O.
2. WELD SIZESHALL BE AISC MINIMUM OF 6 mm UNLESS NOTED OTHERWISE.
3. ALL FIELD WELDS SHALL BE INSPECTED PER QUALITY ASSURANCE AND SPECIAL INSPECTIONS.

REFERENCE DRAWINGS

1	93M-BOA-NAT-LOT-04833
2	93M-BOA-NAT-LOT-09170
3	93M-BOA-NAT-LOT-01976
4	93M-BOA-NAT-LOT-20021
5	
6	
7	
8	
9	

6TH OF OCTOBER CITY RAIL TRANSIT MONORAIL

The Authority | Hill International Consultant | Main Contractor | Structural Designer

KEY PLAN:

REV.	DATE	DSG	CHK	APP	AMENDMENTS	STATUS
B	12/05/2023	M.KH	M.KH	DR.BM	ISSUED FOR INFORMATION	IFI
A	11/20/2022	M.KH	M.KH	DR.BM	ISSUED FOR INFORMATION	IFI

SCALE: AS SHOWN | SHOPDRAWING | DATE: 12/05/2023

DRAWING TITLE
6TH OF OCTOBER MONORAIL
SERVICE WALKWAYS
ZONE (1008)
Z8-HR017

Project Code	Rubric	Initiator	Lot	Ref	Number	Revision
9 3 M	0 4 7 6	A C C	6 0 D E P	D W G	0 8 4 8 5	B

Tekla structures

approval is subject to approval of coordination package between multi-discipline

REVIEWED WITH COMMENT
MONORAILS PROJECT

All holes are 22mm U.N.O Length & Area & Weight per piece

Mark	Profile	Grade	QTY	Length	Area	Weight
Z8-HR016	CHS48.3*4.0	S235JR	1	3989.6	0.60	17.4

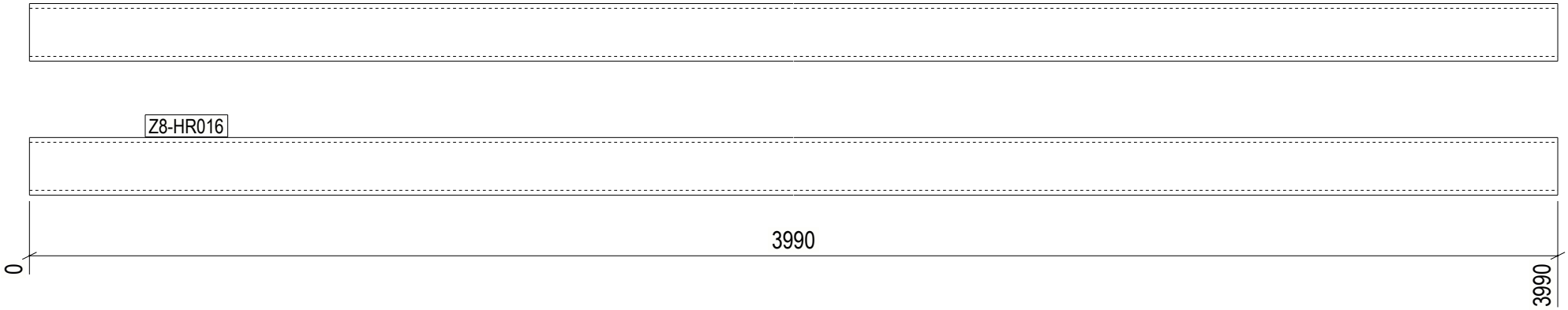

1 REQ'D AS DRAWN MK'D Z8-HR016

6 October Monorail
Engineering Unit
Valid For Construction

GENERAL NOTES:

1. THE DIMENSIONS SHOWN ARE NOMINAL (IN MILLIMETERS), U.N.O.
2. WELD SIZESHALL BE AISC MINIMUM OF 6 mm UNLESS NOTED OTHERWISE.
3. ALL FIELD WELDS SHALL BE INSPECTED PER QUALITY ASSURANCE AND SPECIAL INSPECTIONS.

REFERENCE DRAWINGS

1	93M-BOA-NAT-LOT-04833
2	93M-BOA-NAT-LOT-09170
3	93M-BOA-NAT-LOT-01976
4	93M-BOA-NAT-LOT-20021
5	
6	
7	
8	
9	

6TH OF OCTOBER CITY RAIL TRANSIT MONORAIL

The Authority | Hill International Consultant | Main Contractor | Structural Designer

KEY PLAN:

REV.	DATE	DSG	CHK	APP	AMENDMENTS	STATUS
B	12/05/2023	M.KH	M.KH	DR.M.M	ISSUED FOR INFORMATION	IFI
A	11/20/2022	M.KH	M.KH	DR.M.M	ISSUED FOR INFORMATION	IFI

SCALE: AS SHOWN | SHOPDRAWING | DATE: 12/05/2023

DRAWING TITLE
6TH OF OCTOBER MONORAIL
SERVICE WALKWAYS
ZONE (1008)
Z8-HR016

Project Code	Rubric	Initiator	Lot	Ref	Number	Revision
9 3 M	0 4 7 6	A C C	6 0 D E	P D W G	0 8 4 8 6	B

Tekla structures

All holes are 22mm U.N.O Length & Area & Weight per piece

Mark	Profile	Grade	QTY	Length	Area	Weight
Z8-HR015	CHS48.3*4.0	S235JR	1	3002.7	0.45	13.1

approval is subject to approval of coordination package between multi-discipline

REVIEWED WITH COMMENT
MONORAILS PROJECT

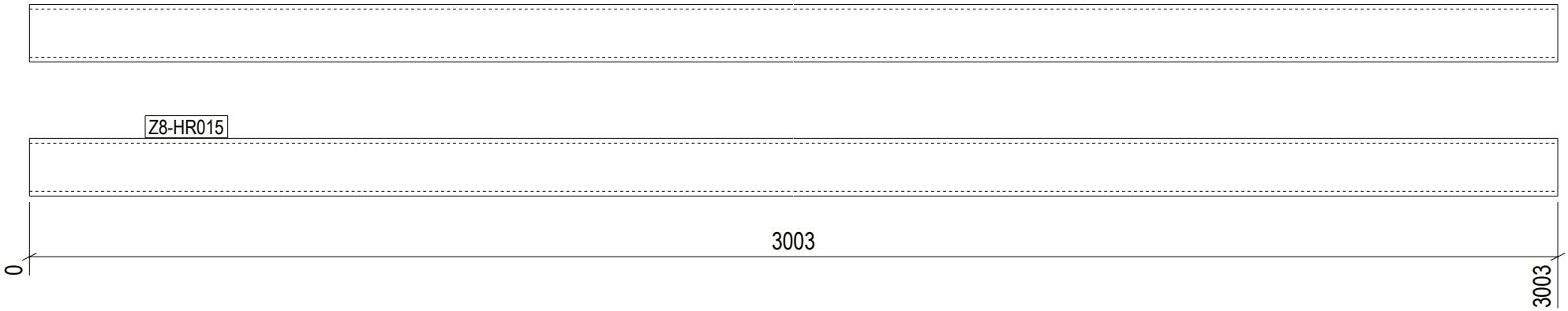

1 REQ'D AS DRAWN MK'D Z8-HR015

6 October Monorail
Engineering Unit
Valid For Construction

GENERAL NOTES:

1. THE DIMENSIONS SHOWN ARE NOMINAL (IN MILLIMETERS), U.N.O.
2. WELD SIZESHALL BE AISC MINIMUM OF 6 mm UNLESS NOTED OTHERWISE.
3. ALL FIELD WELDS SHALL BE INSPECTED PER QUALITY ASSURANCE AND SPECIAL INSPECTIONS.

REFERENCE DRAWINGS

1	93M-BOA-NAT-LOT-04833
2	93M-BOA-NAT-LOT-09170
3	93M-BOA-NAT-LOT-01976
4	93M-BOA-NAT-LOT-20021
5	
6	
7	
8	
9	

6TH OF OCTOBER CITY RAIL TRANSIT MONORAIL

The Authority | Hill International Consultant | Main Contractor | Structural Designer

KEY PLAN:

SCALE	SHOPDRAWING	DATE
AS SHOWN		12/09/2023

REV	DATE	DSG	CHK	APP	AMENDMENTS	STATUS
B	12/05/2023	M.KH	M.KH	DR.M.M	ISSUED FOR INFORMATION	IFI
A	11/20/2022	M.KH	M.KH	DR.M.M	ISSUED FOR INFORMATION	IFI

DRAWING TITLE

6TH OF OCTOBER MONORAIL
SERVICE WALKWAYS
ZONE (1008)
Z8-HR015

Project Code	Rubric	Initiator	Lot	Ref	Number	Revision
9 3 M	0 4 7 6	A C C	6 0 D E	P D W	G 0 8 4 8 7	B

Tekla structures

approval is subject to approval of coordination package between multi-discipline

REVIEWED WITH COMMENT
MONORAILS PROJECT

All holes are 22mm U.N.O Length & Area & Weight per piece

Mark	Profile	Grade	QTY	Length	Area	Weight
Z8-HR014	CHS48.3*4.0	S235JR	1	5722.1	0.86	25.0

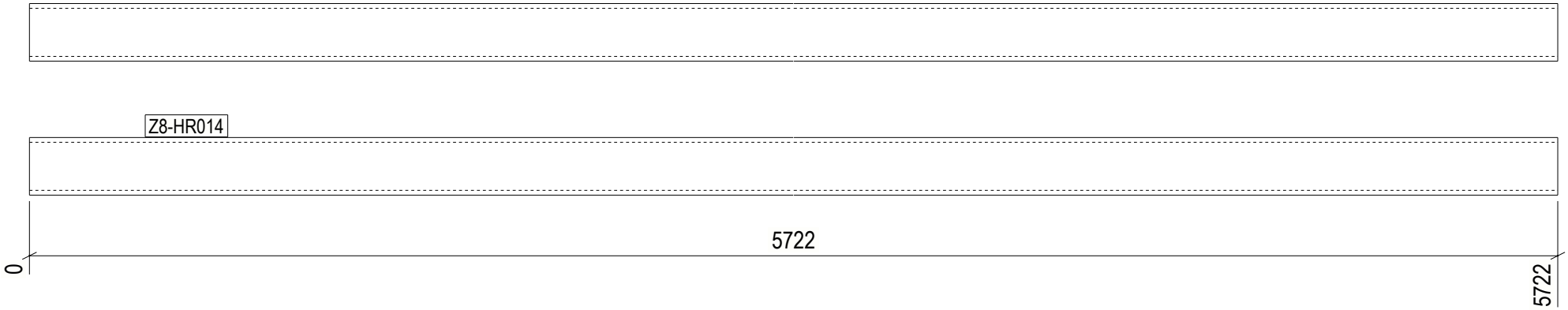

1 REQ'D AS DRAWN MK'D Z8-HR014

6 October Monorail
Engineering Unit
Valid For Construction

GENERAL NOTES:

1. THE DIMENSIONS SHOWN ARE NOMINAL (IN MILLIMETERS), U.N.O.
2. WELD SIZESHALL BE AISC MINIMUM OF 6 mm UNLESS NOTED OTHERWISE.
3. ALL FIELD WELDS SHALL BE INSPECTED PER QUALITY ASSURANCE AND SPECIAL INSPECTIONS.

REFERENCE DRAWINGS

1	93M-BOA-NAT-LOT-04833
2	93M-BOA-NAT-LOT-09170
3	93M-BOA-NAT-LOT-01976
4	93M-BOA-NAT-LOT-20021
5	
6	
7	
8	
9	

6TH OF OCTOBER CITY RAIL TRANSIT MONORAIL

The Authority — Hill International Consultant — Main Contractor — Structural Designer

KEY PLAN:

REV.	DATE	DSG	CHK	APP	AMENDMENTS	STATUS
B	12/05/2023	M.KH	M.KH	DR.M.M	ISSUED FOR INFORMATION	IFI
A	11/20/2022	M.KH	M.KH	DR.M.M	ISSUED FOR INFORMATION	IFI

SCALE: AS SHOWN | SHOPDRAWING | DATE: 12/05/2023

DRAWING TITLE
6TH OF OCTOBER MONORAIL
SERVICE WALKWAYS
ZONE (1008)
Z8-HR014

Project Code	Rubric	Initiator	Lot	Ref	Number	Revision
9 3 M	0 4 7 6	A C C	6 0 D E	P D W G	0 8 4 8	B

Tekla structures

approval is subject to approval of coordination package between multi-discipline

REVIEWED WITH COMMENT
MONORAILS PROJECT

All holes are 22mm U.N.O Length & Area & Weight per piece

Mark	Profile	Grade	QTY	Length	Area	Weight
Z8-HR013	CHS48.3*4.0	S235JR	1	2842.1	0.43	12.4

Z8-HR013

1 REQ'D AS DRAWN MK'D Z8-HR013

6 October Monorail
Engineering Unit
Valid For Construction

Tekla structures

GENERAL NOTES:

1. THE DIMENSIONS SHOWN ARE NOMINAL (IN MILLIMETERS), U.N.O.
2. WELD SIZESHALL BE AISC MINIMUM OF 6 mm UNLESS NOTED OTHERWISE.
3. ALL FIELD WELDS SHALL BE INSPECTED PER QUALITY ASSURANCE AND SPECIAL INSPECTIONS.

REFERENCE DRAWINGS

1	93M-BOA-NAT-LOT-04833
2	93M-BOA-NAT-LOT-09170
3	93M-BOA-NAT-LOT-01976
4	93M-BOA-NAT-LOT-20021
5	
6	
7	
8	
9	

6TH OF OCTOBER CITY RAIL TRANSIT MONORAIL

The Authority — Hill International Consultant — Main Contractor — Structural Designer

KEY PLAN:

SCALE	SHOPDRAWING	DATE
AS SHOWN		12/09/2023

REV	DATE	DSG	CHK	APP	AMENDMENTS	STATUS
B	12/05/2023	M.KH	M.KH	DR.M.M	ISSUED FOR INFORMATION	IFI
A	11/20/2022	M.KH	M.KH	DR.M.M	ISSUED FOR INFORMATION	IFI

DRAWING TITLE

6TH OF OCTOBER MONORAIL
SERVICE WALKWAYS
ZONE (1008)
Z8-HR013

Project Code	Rubric	Initiator	Lot	Ref	Number	Revision
9 3 M	0 4 7 6	A C C	6 0	D E P	D W G	0 8 4 8 9	B

approval is subject to approval of coordination package between multi-discipline

REVIEWED WITH COMMENT
MONORAILS PROJECT

All holes are 22mm U.N.O Length & Area & Weight per piece

Mark	Profile	Grade	QTY	Length	Area	Weight
Z8-HR012	CHS48.3*4.0	S235JR	1	1974.8	0.30	8.6

Z8-HR012

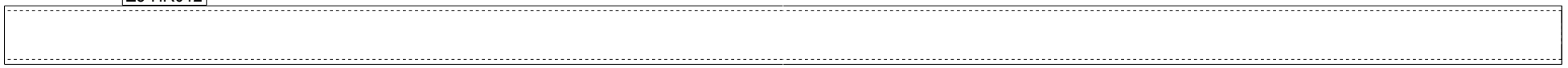

1 REQ'D AS DRAWN MK'D Z8-HR012

6 October Monorail
Engineering Unit
Valid For Construction

GENERAL NOTES:

1. THE DIMENSIONS SHOWN ARE NOMINAL (IN MILLIMETERS), U.N.O.
2. WELD SIZESHALL BE AISC MINIMUM OF 6 mm UNLESS NOTED OTHERWISE.
3. ALL FIELD WELDS SHALL BE INSPECTED PER QUALITY ASSURANCE AND SPECIAL INSPECTIONS.

REFERENCE DRAWINGS

1	93M-BOA-NAT-LOT-04833
2	93M-BOA-NAT-LOT-09170
3	93M-BOA-NAT-LOT-01976
4	93M-BOA-NAT-LOT-20021
5	
6	
7	
8	
9	

6TH OF OCTOBER CITY RAIL TRANSIT MONORAIL

The Authority — Hill International Consultant — Main Contractor — Structural Designer

KEY PLAN:

REV	DATE	DSG	CHK	APP	AMENDMENTS	STATUS
B	12/05/2023	M.KH	M.KH	DR.M.M	ISSUED FOR INFORMATION	IFI
A	11/20/2022	M.KH	M.KH	DR.M.M	ISSUED FOR INFORMATION	IFI

SCALE: AS SHOWN | SHOPDRAWING | DATE: 12/05/2023

DRAWING TITLE
6TH OF OCTOBER MONORAIL
SERVICE WALKWAYS
ZONE (1008)
Z8-HR012

Project Code	Rubric	Initiator	Lot	Ref	Number	Revision
9 3 M	0 4 7 6	A C C	6 0 D E	P D W G	0 8 4 9 0	B

Tekla structures

approval is subject to approval of coordination package between multi-discipline

REVIEWED WITH COMMENT
MONORAILS PROJECT

All holes are 22mm U.N.O Length & Area & Weight per piece

Mark	Profile	Grade	QTY	Length	Area	Weight
Z8-HR011	CHS48.3*4.0	S235JR	1	1798.6	0.27	7.9

Z8-HR011

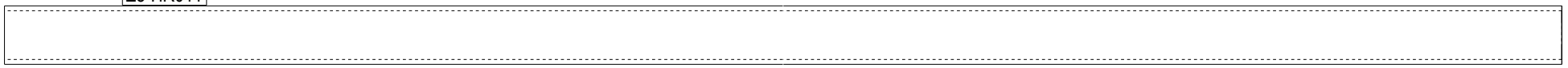

1 REQ'D AS DRAWN MK'D Z8-HR011

6 October Monorail
Engineering Unit
Valid For Construction

GENERAL NOTES:

1. THE DIMENSIONS SHOWN ARE NOMINAL (IN MILLIMETERS), U.N.O.
2. WELD SIZESHALL BE AISC MINIMUM OF 6 mm UNLESS NOTED OTHERWISE.
3. ALL FIELD WELDS SHALL BE INSPECTED PER QUALITY ASSURANCE AND SPECIAL INSPECTIONS.

REFERENCE DRAWINGS

1	93M-BOA-NAT-LOT-04833
2	93M-BOA-NAT-LOT-09170
3	93M-BOA-NAT-LOT-01976
4	93M-BOA-NAT-LOT-20021
5	
6	
7	
8	
9	

6TH OF OCTOBER CITY RAIL TRANSIT MONORAIL

The Authority — Hill International Consultant — Main Contractor — Structural Designer

KEY PLAN:

REV.	DATE	DSG	CHK	APP	AMENDMENTS	STATUS
B	12/05/2023	M.KH	M.KH	DR.M.M	ISSUED FOR INFORMATION	IFI
A	11/20/2022	M.KH	M.KH	DR.M.M	ISSUED FOR INFORMATION	IFI

SCALE: AS SHOWN | SHOPDRAWING | DATE: 12/05/2023

DRAWING TITLE

6TH OF OCTOBER MONORAIL
SERVICE WALKWAYS
ZONE (1008)
Z8-HR011

Project Code	Rubric	Initiator	Lot	Ref	Number	Revision
9 3 M	0 4 7 6	A C C	6 0 D E	P D W	G 0 8 4 9 1	B

Tekla structures

approval is subject to approval of coordination package between multi-discipline

REVIEWED WITH COMMENT
MONORAILS PROJECT

All holes are 22mm U.N.O Length & Area & Weight per piece

Mark	Profile	Grade	QTY	Length	Area	Weight
Z8-HR010	CHS48.3*4.0	S235JR	1	999.4	0.15	4.4

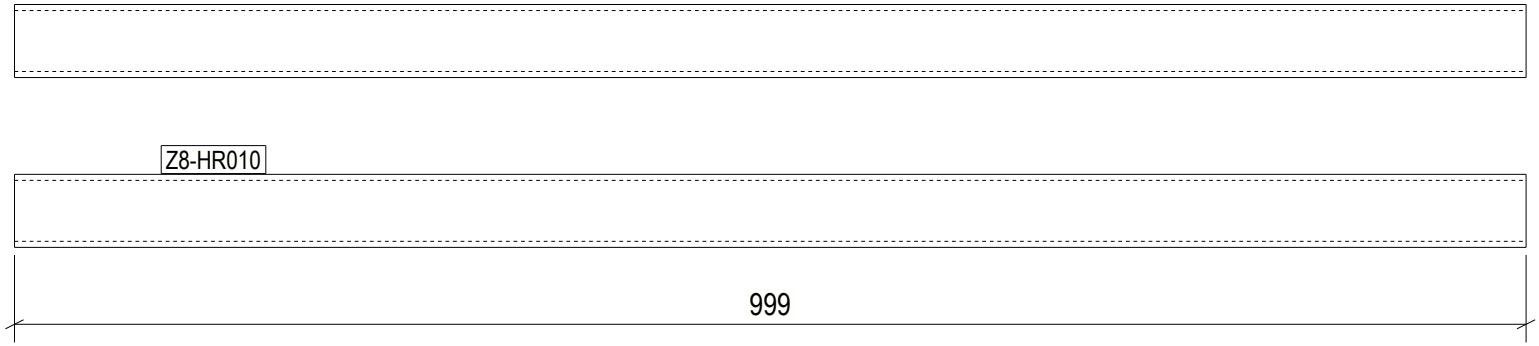

1 REQ'D AS DRAWN MK'D Z8-HR010

6 October Monorail
Engineering Unit
Valid For Construction

GENERAL NOTES:

1. THE DIMENSIONS SHOWN ARE NOMINAL (IN MILLIMETERS), U.N.O.
2. WELD SIZESHALL BE AISC MINIMUM OF 6 mm UNLESS NOTED OTHERWISE.
3. ALL FIELD WELDS SHALL BE INSPECTED PER QUALITY ASSURANCE AND SPECIAL INSPECTIONS.

REFERENCE DRAWINGS

1	93M-BOA-NAT-LOT-04833
2	93M-BOA-NAT-LOT-09170
3	93M-BOA-NAT-LOT-01976
4	93M-BOA-NAT-LOT-20021
5	
6	
7	
8	
9	

6TH OF OCTOBER CITY RAIL TRANSIT MONORAIL

The Authority — Hill International Consultant — Main Contractor — Structural Designer

KEY PLAN:

SCALE: AS SHOWN | SHOPDRAWING | DATE: 12/09/2023

REV.	DATE	DSG	CHK	APP	AMENDMENTS	STATUS
B	12/05/2023	M.KH	M.KH	DR.M.M	ISSUED FOR INFORMATION	IFI
A	11/20/2022	M.KH	M.KH	DR.M.M	ISSUED FOR INFORMATION	IFI

DRAWING TITLE

6TH OF OCTOBER MONORAIL
SERVICE WALKWAYS
ZONE (1008)
Z8-HR010

Project Code	Rubric	Initiator	Lot	Ref	Number	Revision
9 3 M	0 4 7 6	A C C	6 0 D E P	D W G	0 8 4 9 2	B

Tekla structures

All holes are 22mm U.N.O Length & Area & Weight per piece

Mark	Profile	Grade	QTY	Length	Area	Weight
Z8-HR009	CHS48.3*4.0	S235JR	1	2444.2	0.37	10.7

approval is subject to approval of coordination package between multi-discipline

REVIEWED WITH COMMENT
MONORAILS PROJECT

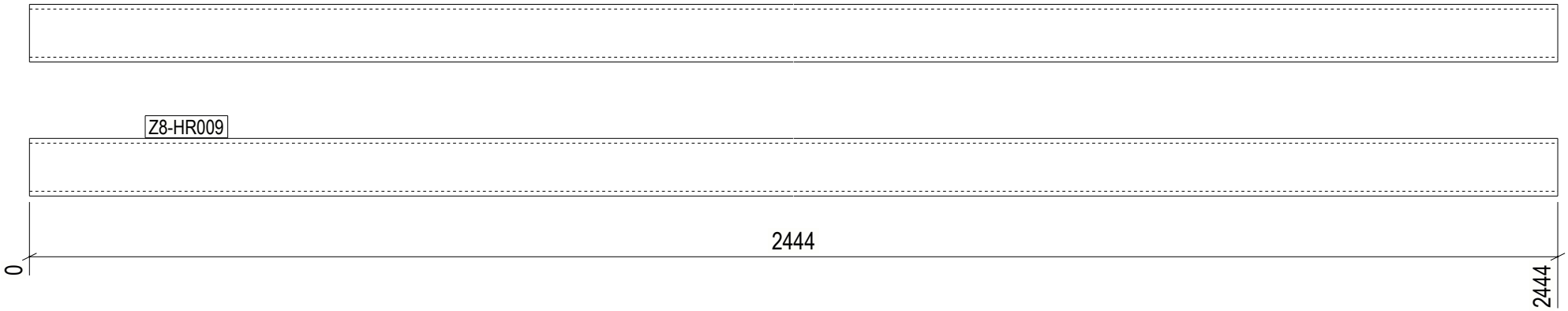

1 REQ'D AS DRAWN MK'D Z8-HR009

6 October Monorail
Engineering Unit
Valid For Construction

GENERAL NOTES:

1. THE DIMENSIONS SHOWN ARE NOMINAL (IN MILLIMETERS), U.N.O.
2. WELD SIZESHALL BE AISC MINIMUM OF 6 mm UNLESS NOTED OTHERWISE.
3. ALL FIELD WELDS SHALL BE INSPECTED PER QUALITY ASSURANCE AND SPECIAL INSPECTIONS.

REFERENCE DRAWINGS

1	93M-BOA-NAT-LOT-04833
2	93M-BOA-NAT-LOT-09170
3	93M-BOA-NAT-LOT-01976
4	93M-BOA-NAT-LOT-20021
5	
6	
7	
8	
9	

6TH OF OCTOBER CITY RAIL TRANSIT MONORAIL

The Authority — Hill International Consultant — Main Contractor — Structural Designer

KEY PLAN:

SCALE	SHOPDRAWING	DATE
AS SHOWN		12/09/2023

REV.	DATE	DSG	CHK	APP	AMENDMENTS	STATUS
B	12/05/2023	M.KH	M.KH	DR.M.M	ISSUED FOR INFORMATION	IFI
A	11/20/2022	M.KH	M.KH	DR.M.M	ISSUED FOR INFORMATION	IFI

DRAWING TITLE

6TH OF OCTOBER MONORAIL
SERVICE WALKWAYS
ZONE (1008)
Z8-HR009

Project Code	Rubric	Initiator	Lot	Ref	Number	Revision
93M	047	6ACC	60DE	PDWG	08493	B

Tekla structures

approval is subject to approval of coordination package between multi-discipline

REVIEWED WITH COMMENT
MONORAILS PROJECT

All holes are 22mm U.N.O Length & Area & Weight per piece

Mark	Profile	Grade	QTY	Length	Area	Weight
Z8-HR008	CHS48.3*4.0	S235JR	1	4502.5	0.68	19.7

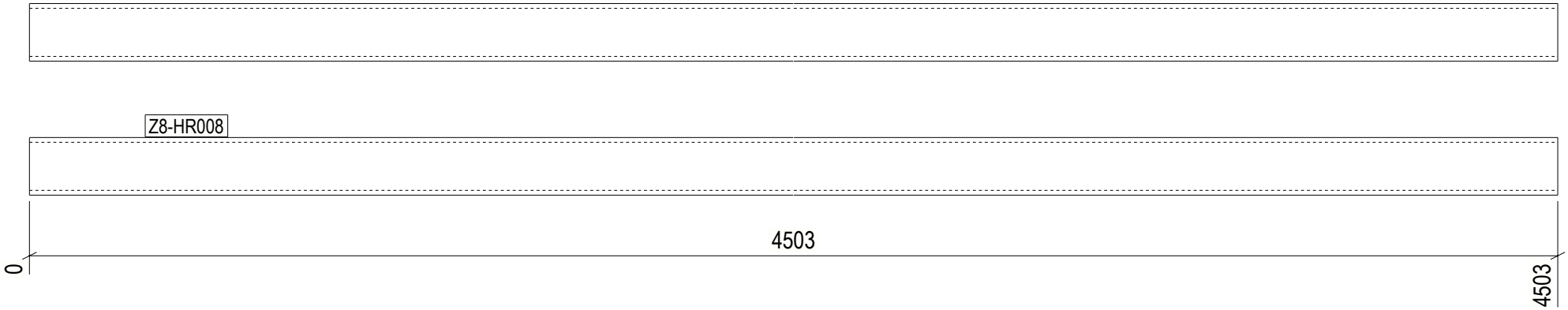

1 REQ'D AS DRAWN MK'D Z8-HR008

6 October Monorail
Engineering Unit
Valid For Construction

GENERAL NOTES:

1. THE DIMENSIONS SHOWN ARE NOMINAL (IN MILLIMETERS), U.N.O.
2. WELD SIZESHALL BE AISC MINIMUM OF 6 mm UNLESS NOTED OTHERWISE.
3. ALL FIELD WELDS SHALL BE INSPECTED PER QUALITY ASSURANCE AND SPECIAL INSPECTIONS.

REFERENCE DRAWINGS

1	93M-BOA-NAT-LOT-04833
2	93M-BOA-NAT-LOT-09170
3	93M-BOA-NAT-LOT-01976
4	93M-BOA-NAT-LOT-20021
5	
6	
7	
8	
9	

6TH OF OCTOBER CITY RAIL TRANSIT MONORAIL

The Authority — Hill International Consultant — Main Contractor — Structural Designer

KEY PLAN:

REV.	DATE	DSG	CHK	APP	AMENDMENTS	STATUS
B	12/05/2023	M.KH	M.KH	DR.M.M	ISSUED FOR INFORMATION	IFI
A	11/20/2022	M.KH	M.KH	DR.M.M	ISSUED FOR INFORMATION	IFI

SCALE: AS SHOWN | SHOPDRAWING | DATE: 12/05/2023

DRAWING TITLE

6TH OF OCTOBER MONORAIL
SERVICE WALKWAYS
ZONE (1008)
Z8-HR008

Project Code	Rubric	Initiator	Lot	Ref	Number	Revision
93M	047	6ACC	60DEP	DWG	0849	B

Tekla structures

approval is subject to approval of coordination package between multi-discipline

REVIEWED WITH COMMENT
MONORAILS PROJECT

All holes are 22mm U.N.O Length & Area & Weight per piece

Mark	Profile	Grade	QTY	Length	Area	Weight
Z8-HR007	CHS48.3*4.0	S235JR	1	4501.4	0.68	19.7

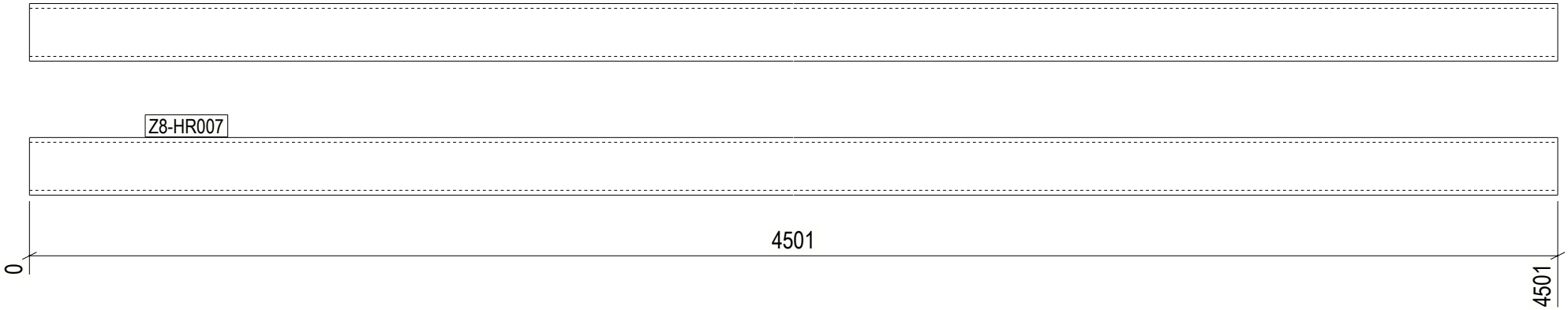

1 REQ'D AS DRAWN MK'D Z8-HR007

6 October Monorail
Engineering Unit
Valid For Construction

GENERAL NOTES:

1. THE DIMENSIONS SHOWN ARE NOMINAL (IN MILLIMETERS), U.N.O.
2. WELD SIZESHALL BE AISC MINIMUM OF 6 mm UNLESS NOTED OTHERWISE.
3. ALL FIELD WELDS SHALL BE INSPECTED PER QUALITY ASSURANCE AND SPECIAL INSPECTIONS.

REFERENCE DRAWINGS

1	93M-BOA-NAT-LOT-04833
2	93M-BOA-NAT-LOT-09170
3	93M-BOA-NAT-LOT-01976
4	93M-BOA-NAT-LOT-20021
5	
6	
7	
8	
9	

6TH OF OCTOBER CITY RAIL TRANSIT MONORAIL

The Authority — Hill International Consultant — Main Contractor — Structural Designer

KEY PLAN:

SCALE	SHOPDRAWING	DATE
AS SHOWN		12/09/2023

REV.	DATE	DSG.	CHK.	APP.	AMENDMENTS	STATUS
B	12/05/2023	M.KH	M.KH	DR.BIM	ISSUED FOR INFORMATION	IFI
A	11/20/2022	M.KH	M.KH	DR.BIM	ISSUED FOR INFORMATION	IFI

DRAWING TITLE

6TH OF OCTOBER MONORAIL
SERVICE WALKWAYS
ZONE (1008)
Z8-HR007

Project Code	Rubric	Initiator	Lot	Ref	Number	Revision
93M	047	6ACC	60DEP	DWG	0849	5 B

Tekla structures

approval is subject to approval of coordination package between multi-discipline

REVIEWED WITH COMMENT MONORAILS PROJECT

All holes are 22mm U.N.O Length & Area & Weight per piece

Mark	Profile	Grade	QTY	Length	Area	Weight
Z8-HR006	CHS48.3*4.0	S235JR	2	2843.8	0.43	12.4

Z8-HR006

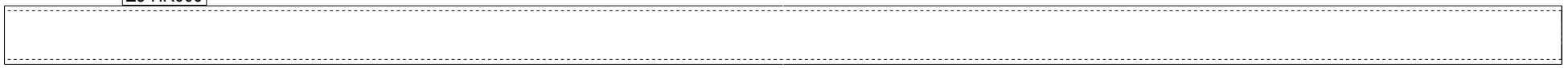

2 REQ'D AS DRAWN MK'D Z8-HR006

6 October Monorail Engineering Unit Valid For Construction

GENERAL NOTES:

1. THE DIMENSIONS SHOWN ARE NOMINAL (IN MILLIMETERS), U.N.O.
2. WELD SIZESHALL BE AISC MINIMUM OF 6 mm UNLESS NOTED OTHERWISE.
3. ALL FIELD WELDS SHALL BE INSPECTED PER QUALITY ASSURANCE AND SPECIAL INSPECTIONS.

REFERENCE DRAWINGS

1	93M-BOA-NAT-LOT-04833
2	93M-BOA-NAT-LOT-09170
3	93M-BOA-NAT-LOT-01976
4	93M-BOA-NAT-LOT-20021
5	
6	
7	
8	
9	

6TH OF OCTOBER CITY RAIL TRANSIT MONORAIL

The Authority — Hill International Consultant — Main Contractor — Structural Designer

KEY PLAN:

REV.	DATE	DSG	CHK	APP	AMENDMENTS	STATUS
B	12/05/2023	M.KH	M.KH	DR.M.M	ISSUED FOR INFORMATION	IFI
A	11/20/2022	M.KH	M.KH	DR.M.M	ISSUED FOR INFORMATION	IFI

SCALE AS SHOWN | SHOPDRAWING | DATE 12/05/2023

DRAWING TITLE

6TH OF OCTOBER MONORAIL SERVICE WALKWAYS ZONE (1008) Z8-HR006

Project Code	Rubric	Initiator	Lot	Ref	Number	Revision
9 3 M	0 4 7 6	A C C	6 0 D E	P D W	G 0 8 4 9 6	B

Tekla structures

approval is subject to approval of coordination package between multi-discipline

REVIEWED WITH COMMENT
MONORAILS PROJECT

All holes are 22mm U.N.O Length & Area & Weight per piece

Mark	Profile	Grade	QTY	Length	Area	Weight
Z8-HR005	CHS48.3*4.0	S235JR	11	5996.5	0.90	26.2

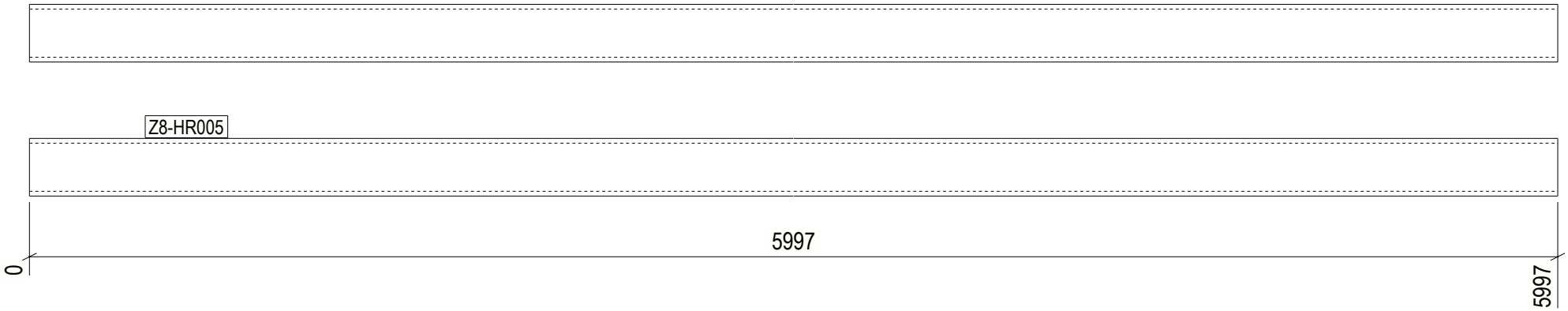

11 REQ'D AS DRAWN MK'D Z8-HR005

6 October Monorail
Engineering Unit
Valid For Construction

GENERAL NOTES:

1. THE DIMENSIONS SHOWN ARE NOMINAL (IN MILLIMETERS), U.N.O.
2. WELD SIZESHALL BE AISC MINIMUM OF 6 mm UNLESS NOTED OTHERWISE.
3. ALL FIELD WELDS SHALL BE INSPECTED PER QUALITY ASSURANCE AND SPECIAL INSPECTIONS.

REFERENCE DRAWINGS

1	93M-BOA-NAT-LOT-04833
2	93M-BOA-NAT-LOT-09170
3	93M-BOA-NAT-LOT-01976
4	93M-BOA-NAT-LOT-20021
5	
6	
7	
8	
9	

6TH OF OCTOBER CITY RAIL TRANSIT MONORAIL

The Authority | Hill International Consultant | Main Contractor | Structural Designer

KEY PLAN:

REV.	DATE	DSG	CHK	APP	AMENDMENTS	STATUS
B	12/05/2023	M.KH	M.KH	DR.M.M	ISSUED FOR INFORMATION	IFI
A	11/20/2022	M.KH	M.KH	DR.M.M	ISSUED FOR INFORMATION	IFI

SCALE: AS SHOWN | SHOPDRAWING | DATE: 12/05/2023

DRAWING TITLE
6TH OF OCTOBER MONORAIL
SERVICE WALKWAYS
ZONE (1008)
Z8-HR005

Project Code	Rubric	Initiator	Lot	Ref	Number	Revision
9 3 M	0 4 7 6	A C C	6 0 D E P	D W G	0 8 4 9 7	B

Tekla structures

All holes are 22mm U.N.O Length & Area & Weight per piece

Mark	Profile	Grade	QTY	Length	Area	Weight
Z8-HR004	CHS48.3*4.0	S235JR	5	5998.0	0.90	26.2

approval is subject to approval of coordination package between multi-discipline

REVIEWED WITH COMMENT
MONORAILS PROJECT

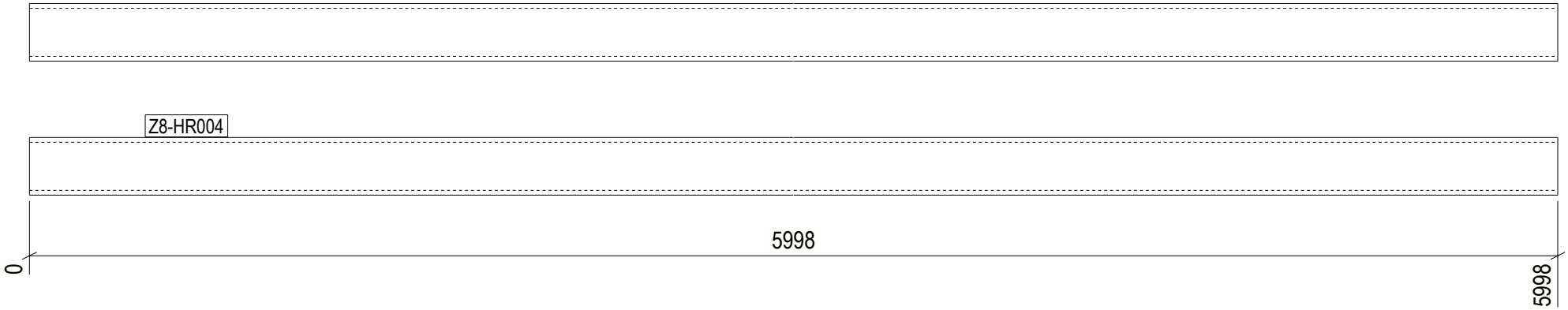

5 REQ'D AS DRAWN MK'D Z8-HR004

6 October Monorail
Engineering Unit
Valid For Construction

GENERAL NOTES:

1. THE DIMENSIONS SHOWN ARE NOMINAL (IN MILLIMETERS), U.N.O.
2. WELD SIZESHALL BE AISC MINIMUM OF 6 mm UNLESS NOTED OTHERWISE.
3. ALL FIELD WELDS SHALL BE INSPECTED PER QUALITY ASSURANCE AND SPECIAL INSPECTIONS.

REFERENCE DRAWINGS

1	93M-BOA-NAT-LOT-04833
2	93M-BOA-NAT-LOT-09170
3	93M-BOA-NAT-LOT-01976
4	93M-BOA-NAT-LOT-20021
5	
6	
7	
8	
9	

6TH OF OCTOBER CITY RAIL TRANSIT MONORAIL

The Authority — Hill International Consultant — Main Contractor — Structural Designer

KEY PLAN:

SCALE	SHOPDRAWING	DATE
AS SHOWN		12/09/2023

REV	DATE	DSG	CHK	APP	AMENDMENTS	STATUS
B	12/05/2023	M.KH	M.KH	DR.M.M	ISSUED FOR INFORMATION	IFI
A	11/20/2022	M.KH	M.KH	DR.M.M	ISSUED FOR INFORMATION	IFI

DRAWING TITLE

6TH OF OCTOBER MONORAIL
SERVICE WALKWAYS
ZONE (1008)
Z8-HR004

Project Code	Rubric	Initiator	Lot	Ref	Number	Revision
9 3 M	0 4 7 6	A C C	6 0 D	E P	D W G	0 8 4 9 8	B

Tekla structures

approval is subject to approval of coordination package between multi-discipline

REVIEWED WITH COMMENT
MONORAILS PROJECT

All holes are 22mm U.N.O Length & Area & Weight per piece

Mark	Profile	Grade	QTY	Length	Area	Weight
Z8-HR003	CHS48.3*4.0	S235JR	1	2112.1	0.32	9.2

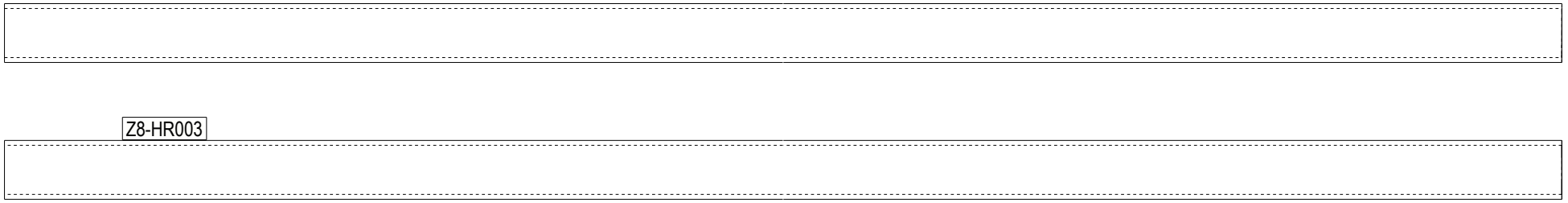

1 REQ'D AS DRAWN MK'D Z8-HR003

6 October Monorail
Engineering Unit
Valid For Construction

GENERAL NOTES:

1. THE DIMENSIONS SHOWN ARE NOMINAL (IN MILLIMETERS), U.N.O.
2. WELD SIZESHALL BE AISC MINIMUM OF 6 mm UNLESS NOTED OTHERWISE.
3. ALL FIELD WELDS SHALL BE INSPECTED PER QUALITY ASSURANCE AND SPECIAL INSPECTIONS.

REFERENCE DRAWINGS

1	93M-BOA-NAT-LOT-04833
2	93M-BOA-NAT-LOT-09170
3	93M-BOA-NAT-LOT-01976
4	93M-BOA-NAT-LOT-20021
5	
6	
7	
8	
9	

6TH OF OCTOBER CITY RAIL TRANSIT MONORAIL

The Authority — Hill International Consultant — Main Contractor — Structural Designer

KEY PLAN:

SCALE	SHOPDRAWING	DATE
AS SHOWN		12/09/2023

REV	DATE	DSG	CHK	APP	AMENDMENTS	STATUS
B	12/05/2023	M.KH	M.KH	DR.M.M	ISSUED FOR INFORMATION	IFI
A	11/20/2022	M.KH	M.KH	DR.M.M	ISSUED FOR INFORMATION	IFI

DRAWING TITLE

6TH OF OCTOBER MONORAIL
SERVICE WALKWAYS
ZONE (1008)
Z8-HR003

Project Code	Rubric	Initiator	Lot	Ref	Number	Revision
9 3 M	0 4 7 6	A C C	6 0 D	E P	D W G	0 8 4 9 9	B

Tekla structures

approval is subject to approval of coordination package between multi-discipline

REVIEWED WITH COMMENT
MONORAILS PROJECT

All holes are 22mm U.N.O Length & Area & Weight per piece

Mark	Profile	Grade	QTY	Length	Area	Weight
Z8-HR002	CHS48.3*4.0	S235JR	5	2974.1	0.45	13.0

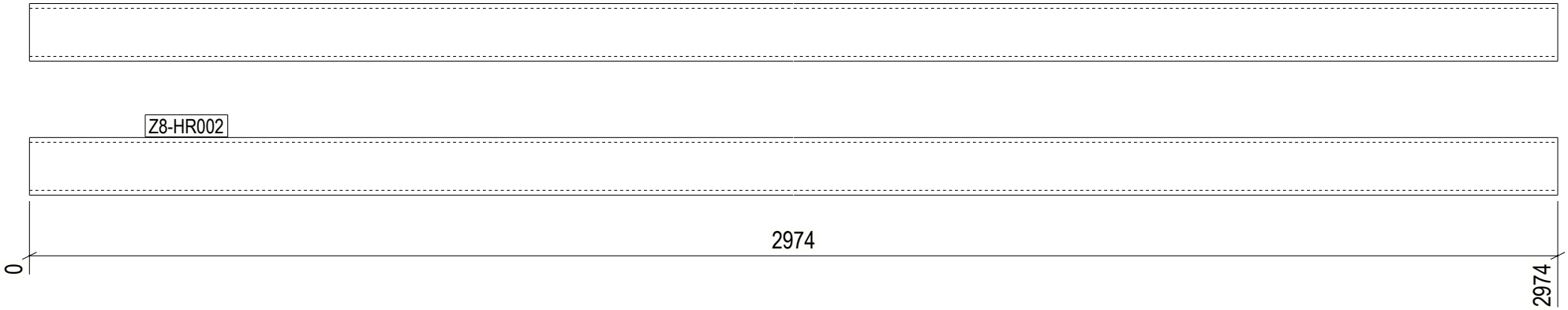

5 REQ'D AS DRAWN MK'D Z8-HR002

6 October Monorail
Engineering Unit
Valid For Construction

GENERAL NOTES:

1. THE DIMENSIONS SHOWN ARE NOMINAL (IN MILLIMETERS), U.N.O.
2. WELD SIZESHALL BE AISC MINIMUM OF 6 mm UNLESS NOTED OTHERWISE.
3. ALL FIELD WELDS SHALL BE INSPECTED PER QUALITY ASSURANCE AND SPECIAL INSPECTIONS.

REFERENCE DRAWINGS

1	93M-BOA-NAT-LOT-04833
2	93M-BOA-NAT-LOT-09170
3	93M-BOA-NAT-LOT-01976
4	93M-BOA-NAT-LOT-20021
5	
6	
7	
8	
9	

6TH OF OCTOBER CITY RAIL TRANSIT MONORAIL

The Authority | Hill International Consultant | Main Contractor | Structural Designer

KEY PLAN:

REV.	DATE	DSG	CHK	APP	AMENDMENTS	STATUS
B	12/05/2023	M.KH	M.KH	DR.M.M	ISSUED FOR INFORMATION	IFI
A	11/20/2022	M.KH	M.KH	DR.M.M	ISSUED FOR INFORMATION	IFI

SCALE: AS SHOWN | SHOPDRAWING | DATE: 12/05/2023

DRAWING TITLE
6TH OF OCTOBER MONORAIL
SERVICE WALKWAYS
ZONE (1008)
Z8-HR002

Project Code	Rubric	Initiator	Lot	Ref	Number	Revision
9 3 M	0 4 7 6	A C C	6 0 D E	P D W	G 0 8 5 0 0	B

Tekla structures

All holes are 22mm U.N.O Length & Area & Weight per piece

Mark	Profile	Grade	QTY	Length	Area	Weight
Z8-HR001	CHS48.3*4.0	S235JR	2	2828.6	0.42	12.4

approval is subject to approval of coordination package between multi-discipline

REVIEWED WITH COMMENT
MONORAILS PROJECT

Z8-HR001

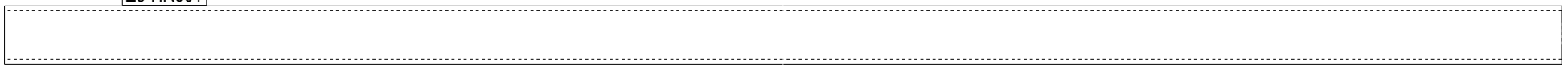

2 REQ'D AS DRAWN MK'D Z8-HR001

6 October Monorail
Engineering Unit
Valid For Construction

GENERAL NOTES:

1. THE DIMENSIONS SHOWN ARE NOMINAL (IN MILLIMETERS), U.N.O.
2. WELD SIZESHALL BE AISC MINIMUM OF 6 mm UNLESS NOTED OTHERWISE.
3. ALL FIELD WELDS SHALL BE INSPECTED PER QUALITY ASSURANCE AND SPECIAL INSPECTIONS.

REFERENCE DRAWINGS

1	93M-BOA-NAT-LOT-04833
2	93M-BOA-NAT-LOT-09170
3	93M-BOA-NAT-LOT-01976
4	93M-BOA-NAT-LOT-20021
5	
6	
7	
8	
9	

6TH OF OCTOBER CITY RAIL TRANSIT MONORAIL

The Authority | Hill International Consultant | Main Contractor | Structural Designer

KEY PLAN:

REV	DATE	DSG	CHK	APP	AMENDMENTS	STATUS
B	12/05/2023	M.KH	M.KH	DR.M.M	ISSUED FOR INFORMATION	IFI
A	11/20/2022	M.KH	M.KH	DR.M.M	ISSUED FOR INFORMATION	IFI

SCALE: AS SHOWN | SHOPDRAWING | DATE: 12/05/2023

DRAWING TITLE
6TH OF OCTOBER MONORAIL
SERVICE WALKWAYS
ZONE (1008)
Z8-HR001

Project Code	Rubric	Initiator	Lot	Ref	Number	Revision
93M	047	6ACC	60DE	PDWG	0850	1B

Tekla structures

approval is subject to approval of coordination package between multi-discipline

REVIEWED WITH COMMENT
MONORAILS PROJECT

All holes are 22mm U.N.O Length & Area & Weight per piece						
Z8-FR063	L70*7	S235JR	1	1424.4	0.40	10.4
Mark	Profile	Grade	QTY	Length	Area	Weight

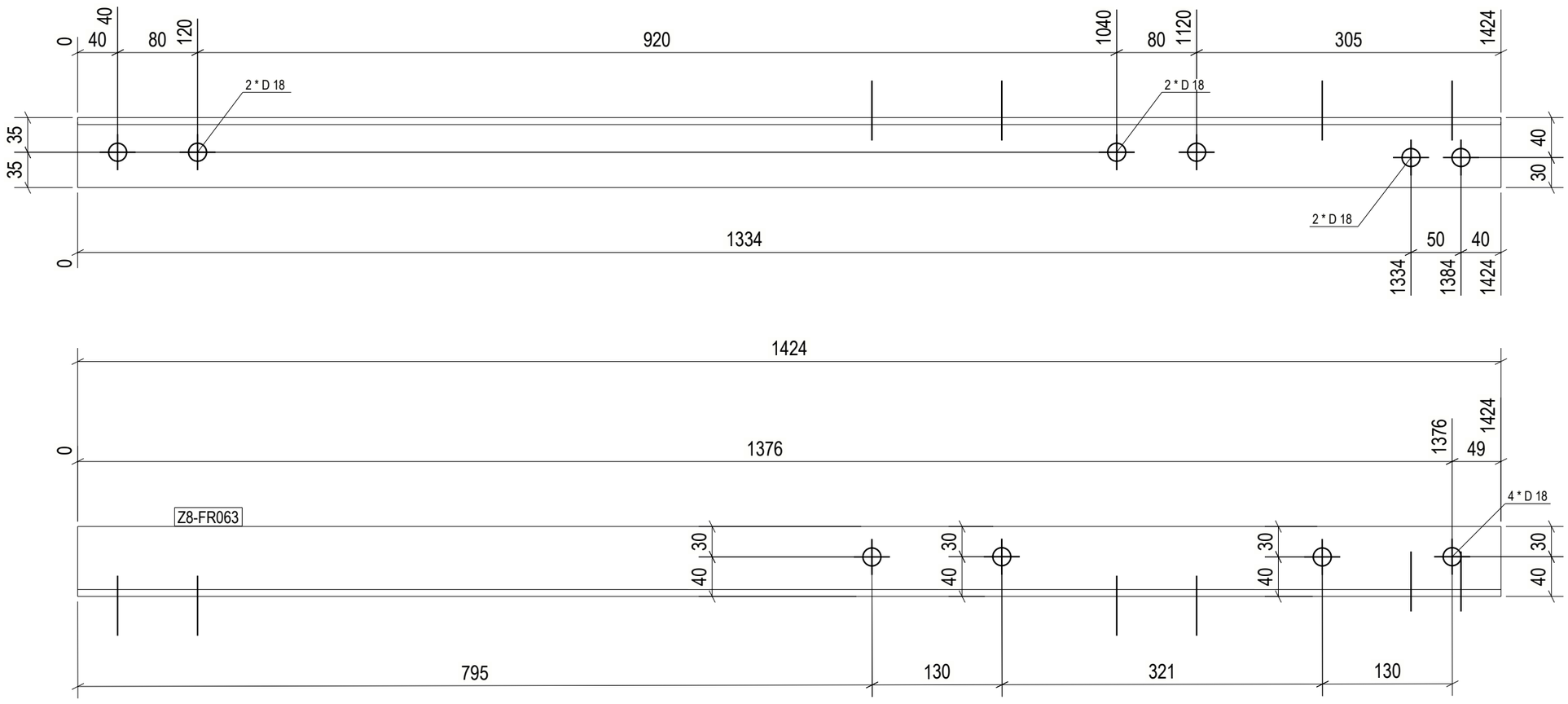

1 REQ'D AS DRAWN MK'D Z8-FR063

6 October Monorail
Engineering Unit
Valid For Construction

GENERAL NOTES:

1. THE DIMENSIONS SHOWN ARE NOMINAL (IN MILLIMETERS), U.N.O.
2. WELD SIZESHALL BE AISC MINIMUM OF 6 mm UNLESS NOTED OTHERWISE.
3. ALL FIELD WELDS SHALL BE INSPECTED PER QUALITY ASSURANCE AND SPECIAL INSPECTIONS.

REFERENCE DRAWINGS

1	93M-BOA-NAT-LOT-04833
2	93M-BOA-NAT-LOT-09170
3	93M-BOA-NAT-LOT-01976
4	93M-BOA-NAT-LOT-20021
5	
6	
7	
8	
9	

6TH OF OCTOBER CITY RAIL TRANSIT MONORAIL

The Authority — Hill International Consultant — Main Contractor — Structural Designer

KEY PLAN:

SCALE: AS SHOWN | SHOP DRAWING | DATE: 12/05/2023

REV	DATE	DSN	CHK	APP	AMENDMENTS	STATUS
B	12/05/2023	M.KH	M.KH	DR.M.M	ISSUED FOR INFORMATION	IFI

DRAWING TITLE

6TH OF OCTOBER MONORAIL
SERVICE WALKWAYS
ZONE (1008)
Z8-FR063

Project Code	Rubric	Initator	Lot	Ref	Number	Revision
9 3 M	0 4 7 6	A C C	6 0 D E P	D W G	0 8 5 0 2	B

Tekla structures

approval is subject to approval of coordination package between multi-discipline

REVIEWED WITH COMMENT
MONORAILS PROJECT

All holes are 22mm U.N.O Length & Area & Weight per piece

Mark	Profile	Grade	QTY	Length	Area	Weight
Z8-FR062	UPN160	S235JR	1	2368.0	1.30	44.6

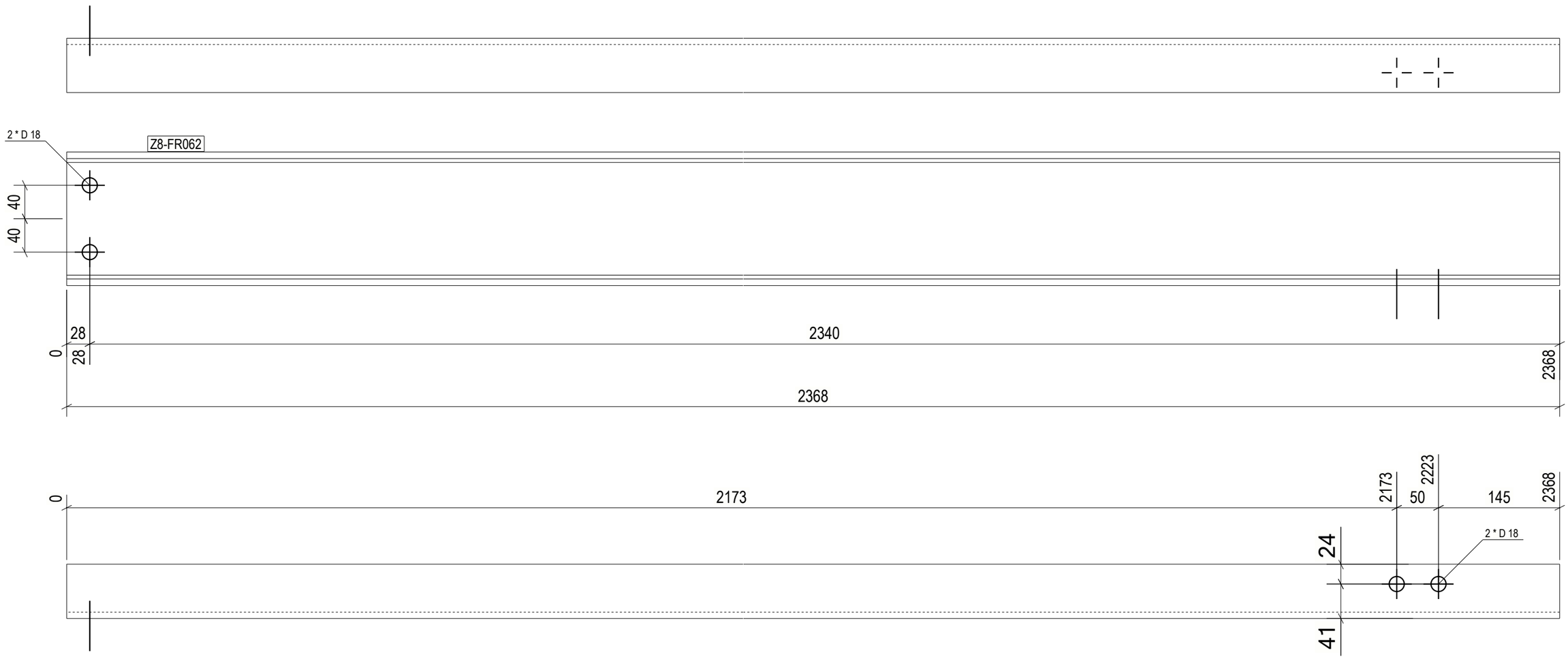

1 REQ'D AS DRAWN MK'D Z8-FR062

GENERAL NOTES:

1. THE DIMENSIONS SHOWN ARE NOMINAL (IN MILLIMETERS), U.N.O.
2. WELD SIZESHALL BE AISC MINIMUM OF 6 mm UNLESS NOTED OTHERWISE.
3. ALL FIELD WELDS SHALL BE INSPECTED PER QUALITY ASSURANCE AND SPECIAL INSPECTIONS.

REFERENCE DRAWINGS

1	93M-BOA-NAT-LOT-04833
2	93M-BOA-NAT-LOT-09170
3	93M-BOA-NAT-LOT-01976
4	93M-BOA-NAT-LOT-20021
5	
6	
7	
8	
9	

6TH OF OCTOBER CITY RAIL TRANSIT MONORAIL

The Authority | Consultant: Hill International | Main Contractor | Structural Designer

KEY PLAN:

6 October Monorail Engineering Unit
Valid For Construction

SCALE	SHOP DRAWING	DATE
AS SHOWN		12/05/2023

REV	DATE	DSN	CHK	APP	AMENDMENTS	STATUS
B	12/05/2023	M.KH	M.KH	DR.M.M	ISSUED FOR INFORMATION	IFI

DRAWING TITLE
6TH OF OCTOBER MONORAIL
SERVICE WALKWAYS
ZONE (1008)
Z8-FR062

Project Code	Rubric	Initiator	Lot	Ref	Number	Revision
9 3 M	0 4 7 6	A C C	6 0 D E P	D W G	0 8 5 0 3	B

Tekla structures

approval is subject to approval of coordination package between multi-discipline

REVIEWED WITH COMMENT
MONORAILS PROJECT

All holes are 22mm U.N.O Length & Area & Weight per piece

Mark	Profile	Grade	QTY	Length	Area	Weight
Z8-FR061	UPN160	S235JR	1	5920.0	3.26	111.5

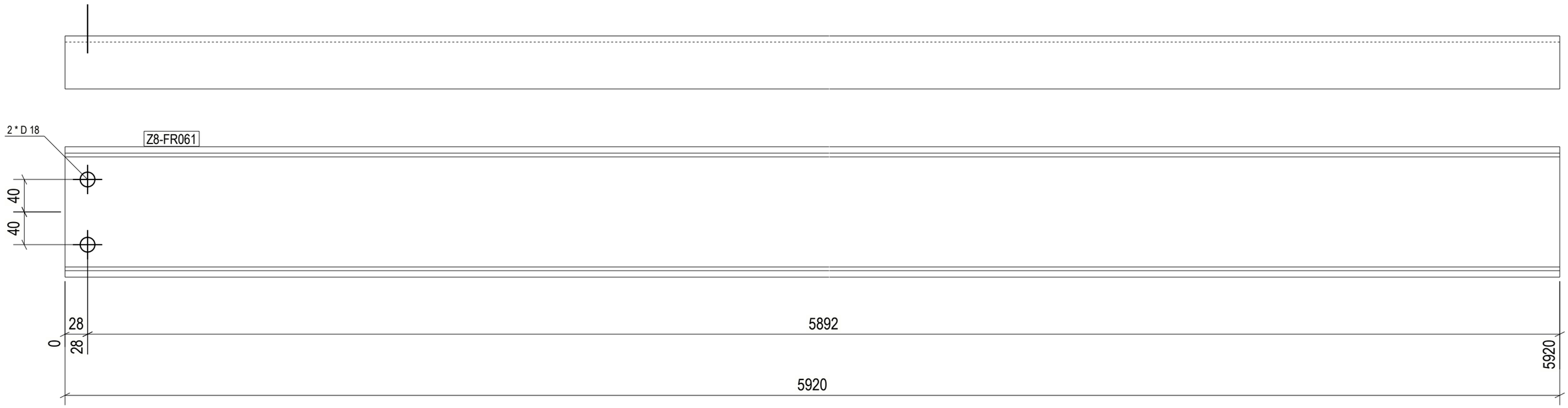

1 REQ'D AS DRAWN MK'D Z8-FR061

6 October Monorail
Engineering Unit
Valid For Construction

GENERAL NOTES:

1. THE DIMENSIONS SHOWN ARE NOMINAL (IN MILLIMETERS), U.N.O.
2. WELD SIZESHALL BE AISC MINIMUM OF 6 mm UNLESS NOTED OTHERWISE.
3. ALL FIELD WELDS SHALL BE INSPECTED PER QUALITY ASSURANCE AND SPECIAL INSPECTIONS.

REFERENCE DRAWINGS

1	93M-BOA-NAT-LOT-04833
2	93M-BOA-NAT-LOT-09170
3	93M-BOA-NAT-LOT-01976
4	93M-BOA-NAT-LOT-20021
5	
6	
7	
8	
9	

6TH OF OCTOBER CITY RAIL TRANSIT MONORAIL

The Authority — Hill International Consultant — Main Contractor — Structural Designer

KEY PLAN:

SCALE	SHOP DRAWING	DATE
AS SHOWN		12/05/2023

REV	DATE	DSN	CHK	APP	AMENDMENTS / ISSUED FOR INFORMATION	STATUS
B	12/05/2023	M.KH	M.KH	DR.M.M	ISSUED FOR INFORMATION	IFI

DRAWING TITLE

6TH OF OCTOBER MONORAIL
SERVICE WALKWAYS
ZONE (1008)
Z8-FR061

Project Code	Rubric	Initiator	Lot	Ref	Number	Revision
93	M047	6	ACC60DEP	DWG	08504	B

Tekla structures

approval is subject to approval of coordination package between multi-discipline

REVIEWED WITH COMMENT MONORAILS PROJECT

All holes are 22mm U.N.O Length & Area & Weight per piece						
Z8-FR060	UPN160	S235JR	1	5920.0	3.26	111.5
Mark	Profile	Grade	QTY	Length	Area	Weight

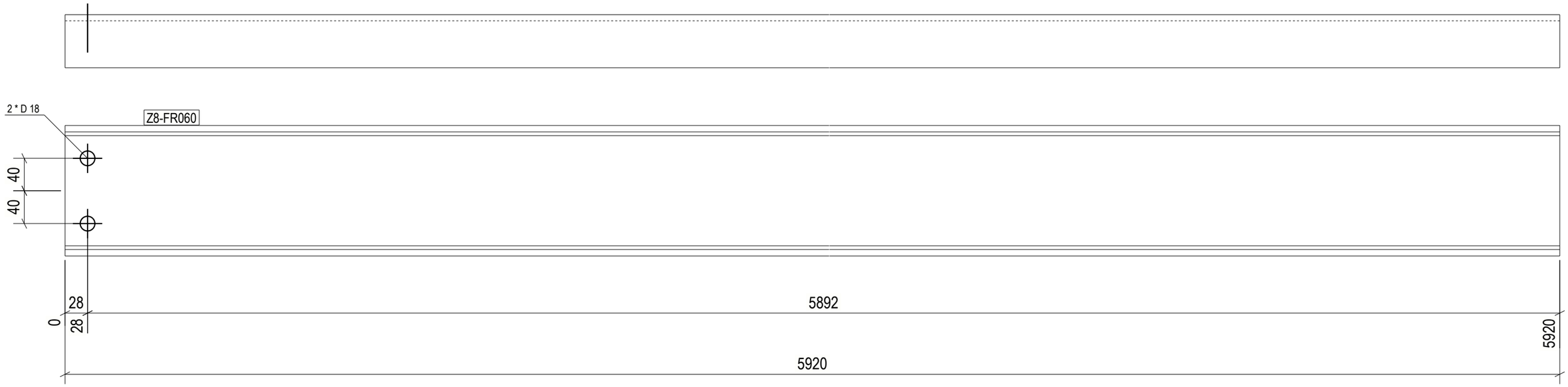

1 REQ'D AS DRAWN MK'D Z8-FR060

6 October Monorail Engineering Unit Valid For Construction

GENERAL NOTES:

1. THE DIMENSIONS SHOWN ARE NOMINAL (IN MILLIMETERS), U.N.O.
2. WELD SIZESHALL BE AISC MINIMUM OF 6 mm UNLESS NOTED OTHERWISE.
3. ALL FIELD WELDS SHALL BE INSPECTED PER QUALITY ASSURANCE AND SPECIAL INSPECTIONS.

REFERENCE DRAWINGS

1	93M-BOA-NAT-LOT-04833
2	93M-BOA-NAT-LOT-09170
3	93M-BOA-NAT-LOT-01976
4	93M-BOA-NAT-LOT-20021
5	
6	
7	
8	
9	

6TH OF OCTOBER CITY RAIL TRANSIT MONORAIL

The Authority | Hill International Consultant | ORASCOM BOMBARDIER Main Contractor | INNOVA Structural Designer

KEY PLAN:

SCALE	SHOP DRAWING	DATE
AS SHOWN		12/05/2023

REV	DATE	DSG	CHK	APP	AMENDMENTS	STATUS
B	12/05/2023	M.KH	M.KH	DR.M.M	ISSUED FOR INFORMATION	IFI

DRAWING TITLE

6TH OF OCTOBER MONORAIL SERVICE WALKWAYS ZONE (1008)

Z8-FR060

Project Code	Rubric	Initiator	Lot	Ref	Number	Revision
93M	0476	ACC	60DEP	DWG	08505	B

Tekla structures

approval is subject to approval of coordination package between multi-discipline

REVIEWED WITH COMMENT
MONORAILS PROJECT

All holes are 22mm U.N.O Length & Area & Weight per piece

Mark	Profile	Grade	QTY	Length	Area	Weight
Z8-FR059	UPN160	S235JR	1	4144.0	2.28	78.1

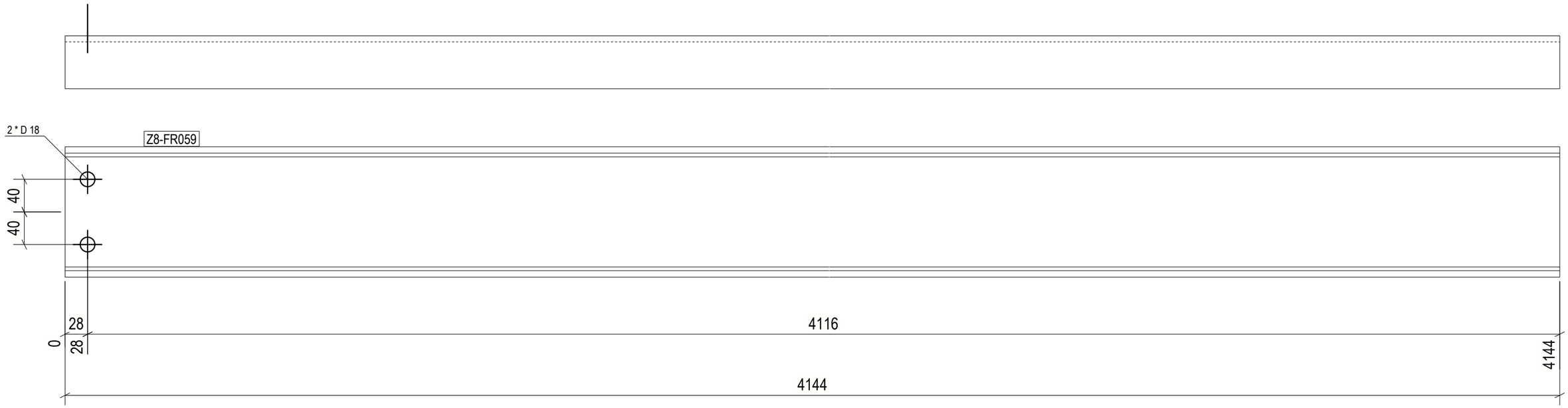

1 REQ'D AS DRAWN MK'D Z8-FR059

6 October Monorail
Engineering Unit
Valid For Cönstruction

GENERAL NOTES:

1. THE DIMENSIONS SHOWN ARE NOMINAL (IN MILLIMETERS), U.N.O.
2. WELD SIZESHALL BE AISC MINIMUM OF 6 mm UNLESS NOTED OTHERWISE.
3. ALL FIELD WELDS SHALL BE INSPECTED PER QUALITY ASSURANCE AND SPECIAL INSPECTIONS.

REFERENCE DRAWINGS

1	93M-BOA-NAT-LOT-04833
2	93M-BOA-NAT-LOT-09170
3	93M-BOA-NAT-LOT-01976
4	93M-BOA-NAT-LOT-20021
5	
6	
7	
8	
9	

6TH OF OCTOBER CITY RAIL TRANSIT MONORAIL

The Authority — Hill International Consultant — Main Contractor — Structural Designer

KEY PLAN:

SCALE	SHOP DRAWING	DATE
AS SHOWN		12/05/2023

REV	DATE	DSN	CHK	APP	AMENDMENTS	STATUS
B	12/05/2023	M.KH	M.KH	DR.M.M	ISSUED FOR INFORMATION	IFI
A	12/05/2023	M.KH	M.KH	DR.M.M	ISSUED FOR INFORMATION	IFI

DRAWING TITLE

6TH OF OCTOBER MONORAIL
SERVICE WALKWAYS
ZONE (1008)
Z8-FR059

Project Code	Rubric	Initiator	Lot	Ref	Number	Revision
93M	047	ACC	600	DEP	DWG	08506	B

Tekla structures

approval is subject to approval of coordination package between multi-discipline

REVIEWED WITH COMMENT MONORAILS PROJECT

All holes are 22mm U.N.O Length & Area & Weight per piece						
Z8-FR058	UPN160	S235JR	1	4144.0	2.28	78.1
Mark	Profile	Grade	QTY	Length	Area	Weight

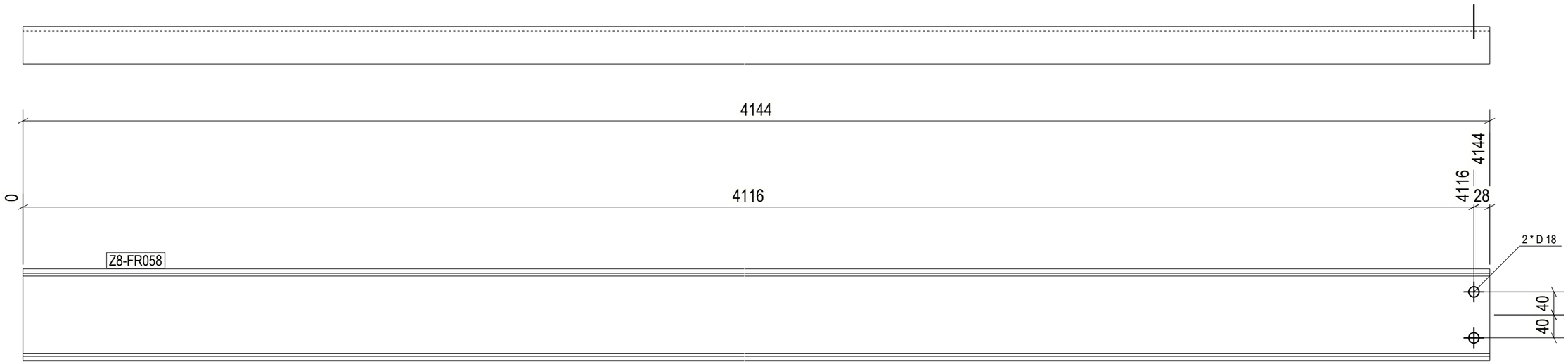

1 REQ'D AS DRAWN MK'D Z8-FR058

6 October Monorail Engineering Unit Valid For Construction

GENERAL NOTES:

1. THE DIMENSIONS SHOWN ARE NOMINAL (IN MILLIMETERS), U.N.O.
2. WELD SIZESHALL BE AISC MINIMUM OF 6 mm UNLESS NOTED OTHERWISE.
3. ALL FIELD WELDS SHALL BE INSPECTED PER QUALITY ASSURANCE AND SPECIAL INSPECTIONS.

REFERENCE DRAWINGS

1	93M-BOA-NAT-LOT-04833
2	93M-BOA-NAT-LOT-09170
3	93M-BOA-NAT-LOT-01976
4	93M-BOA-NAT-LOT-20021
5	
6	
7	
8	
9	

6TH OF OCTOBER CITY RAIL TRANSIT MONORAIL

The Authority | Hill International Consultant | Main Contractor | Structural Designer

KEY PLAN:

SCALE	SHOP DRAWING	DATE
AS SHOWN		12/05/2023

REV	DATE	DSN	CHK	APP	AMENDMENTS	STATUS
B	12/05/2023	M.KH	M.KH	DR.M.M	ISSUED FOR INFORMATION	IFI

DRAWING TITLE

6TH OF OCTOBER MONORAIL SERVICE WALKWAYS ZONE (1008)

Z8-FR058

Project Code	Rubric	Initiator	Lot	Ref	Number	Revision
93M	0476	ACC	60DEP	DWG	08507	B

Tekla structures

approval is subject to approval of coordination package between multi-discipline

REVIEWED WITH COMMENT
MONORAILS PROJECT

All holes are 22mm U.N.O Length & Area & Weight per piece						
Z8-FR057	UPN160	S235JR	1	2368.0	1.30	44.6
Mark	Profile	Grade	QTY	Length	Area	Weight

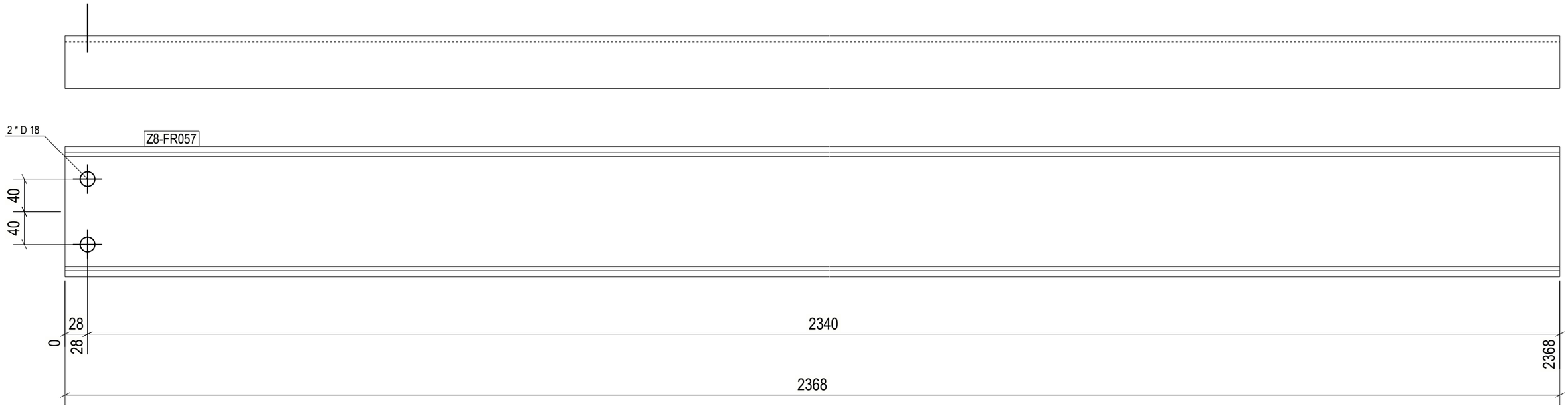

1 REQ'D AS DRAWN MK'D Z8-FR057

GENERAL NOTES:

1. THE DIMENSIONS SHOWN ARE NOMINAL (IN MILLIMETERS), U.N.O.
2. WELD SIZESHALL BE AISC MINIMUM OF 6 mm UNLESS NOTED OTHERWISE.
3. ALL FIELD WELDS SHALL BE INSPECTED PER QUALITY ASSURANCE AND SPECIAL INSPECTIONS.

REFERENCE DRAWINGS

1	93M-BOA-NAT-LOT-04833
2	93M-BOA-NAT-LOT-09170
3	93M-BOA-NAT-LOT-01976
4	93M-BOA-NAT-LOT-20021
5	
6	
7	
8	
9	

6TH OF OCTOBER CITY RAIL TRANSIT MONORAIL

The Authority — Hill International Consultant — Main Contractor — Structural Designer

KEY PLAN:

6 October Monorail
Engineering Unit
Valid For Construction

SCALE	SHOP DRAWING	DATE
AS SHOWN		12/05/2023

REV	DATE	DSN	CHK	APP	AMENDMENTS	STATUS
B	12/05/2023	M.KH	M.KH	DR.M.M	ISSUED FOR INFORMATION	IFI

DRAWING TITLE

6TH OF OCTOBER MONORAIL
SERVICE WALKWAYS
ZONE (1008)
Z8-FR057

Project Code	Rubric	Initiator	Lot	Ref	Number	Revision
93M	047	ACC	600	DEP	DWG	08508	B

Tekla structures

approval is subject to approval of coordination package between multi-discipline

REVIEWED WITH COMMENT
MONORAILS PROJECT

All holes are 22mm U.N.O Length & Area & Weight per piece						
Z8-FR056	L70*7	S235JR	1	1159.9	0.33	8.4
Mark	Profile	Grade	QTY	Length	Area	Weight

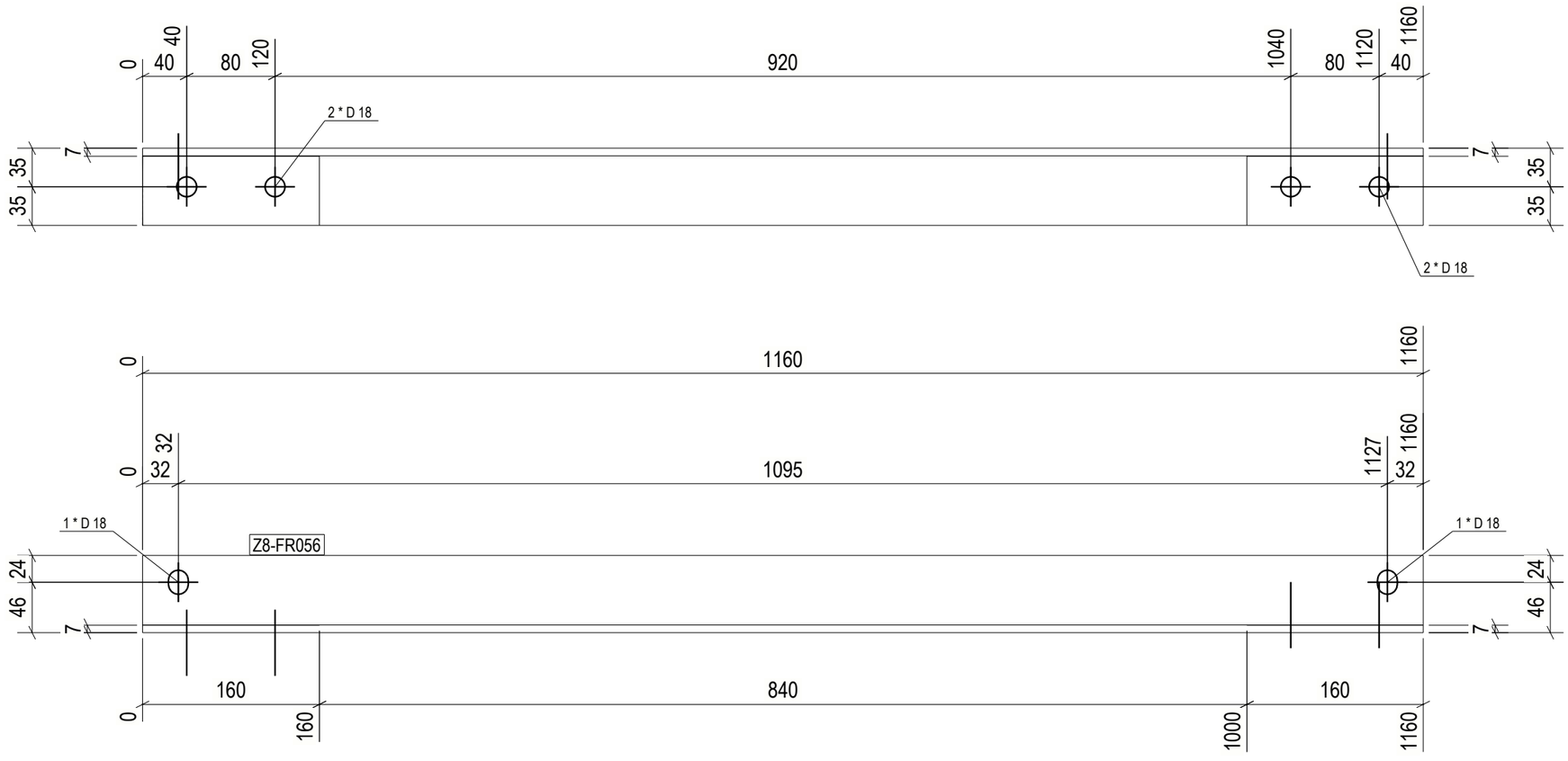

1 REQ'D AS DRAWN MK'D Z8-FR056

6 October Monorail
Engineering Unit
Valid For Construction

GENERAL NOTES:

1. THE DIMENSIONS SHOWN ARE NOMINAL (IN MILLIMETERS), U.N.O.
2. WELD SIZESHALL BE AISC MINIMUM OF 6 mm UNLESS NOTED OTHERWISE.
3. ALL FIELD WELDS SHALL BE INSPECTED PER QUALITY ASSURANCE AND SPECIAL INSPECTIONS.

REFERENCE DRAWINGS

1	93M-BOA-NAT-LOT-04833
2	93M-BOA-NAT-LOT-09170
3	93M-BOA-NAT-LOT-01976
4	93M-BOA-NAT-LOT-20021
5	
6	
7	
8	
9	

6TH OF OCTOBER CITY RAIL TRANSIT MONORAIL

The Authority | Hill International Consultant | Main Contractor | Structural Designer

KEY PLAN:

SCALE: AS SHOWN | SHOP DRAWING | DATE: 12/05/2023

REV	DATE	DRN	CHK	APP	AMENDMENT	STATUS
B	12/05/2023	M.KH	M.KH	DR.M.M	ISSUED FOR INFORMATION	IFI

DRAWING TITLE
6TH OF OCTOBER MONORAIL
SERVICE WALKWAYS
ZONE (1008)
Z8-FR056

Project Code	Rubric	Initiator	Lot	Ref	Number	Revision
9 3	M 0 4 7 6	A C C	6 0 D E P	D W G	0 8 5 0 9	B

Tekla structures

approval is subject to approval of coordination package between multi-discipline

REVIEWED WITH COMMENT
MONORAILS PROJECT

All holes are 22mm U.N.O Length & Area & Weight per piece

Mark	Profile	Grade	QTY	Length	Area	Weight
Z8-FR055	L70*7	S235JR	1	985.7	0.28	7.2

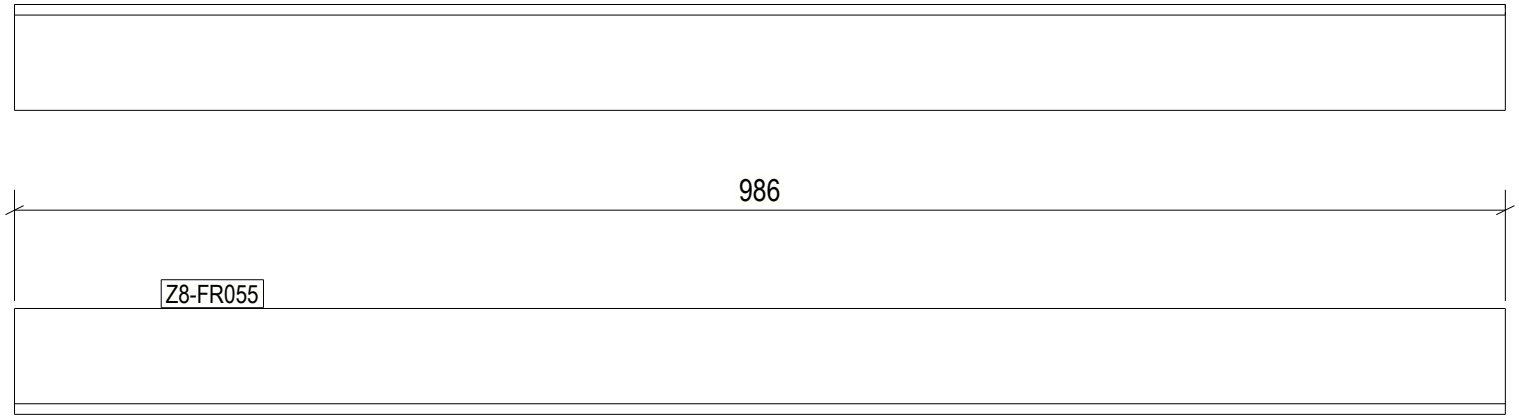

1 REQ'D AS DRAWN MK'D Z8-FR055

6 October Monorail
Engineering Unit
Valid For Construction

GENERAL NOTES:

1. THE DIMENSIONS SHOWN ARE NOMINAL (IN MILLIMETERS), U.N.O.
2. WELD SIZESHALL BE AISC MINIMUM OF 6 mm UNLESS NOTED OTHERWISE.
3. ALL FIELD WELDS SHALL BE INSPECTED PER QUALITY ASSURANCE AND SPECIAL INSPECTIONS.

REFERENCE DRAWINGS

1	93M-BOA-NAT-LOT-04833
2	93M-BOA-NAT-LOT-09170
3	93M-BOA-NAT-LOT-01976
4	93M-BOA-NAT-LOT-20021
5	
6	
7	
8	
9	

6TH OF OCTOBER CITY RAIL TRANSIT MONORAIL

The Authority | Hill International Consultant | Main Contractor | Structural Designer

KEY PLAN:

SCALE	SHOPDRAWING	DATE
AS SHOWN		12/09/2023

REV.	DATE	DSG.	CHK.	APP.	AMENDMENTS	STATUS
B	12/05/2023	M.KH	M.KH	DR.BM	ISSUED FOR INFORMATION	IFI
A	11/20/2022	M.KH	M.KH	DR.BM	ISSUED FOR INFORMATION	IFI

DRAWING TITLE

6TH OF OCTOBER MONORAIL
SERVICE WALKWAYS
ZONE (1008)
Z8-FR055

Project Code	Rubric	Initiator	Lot	Ref	Number	Revision
93M	047	ACC	60DEP	DWG	0851	B

Tekla structures

approval is subject to approval of coordination package between multi-discipline

REVIEWED WITH COMMENT
MONORAILS PROJECT

All holes are 22mm U.N.O Length & Area & Weight per piece

Mark	Profile	Grade	QTY	Length	Area	Weight
Z8-FR054	L70*7	S235JR	1	1160.0	0.33	8.5

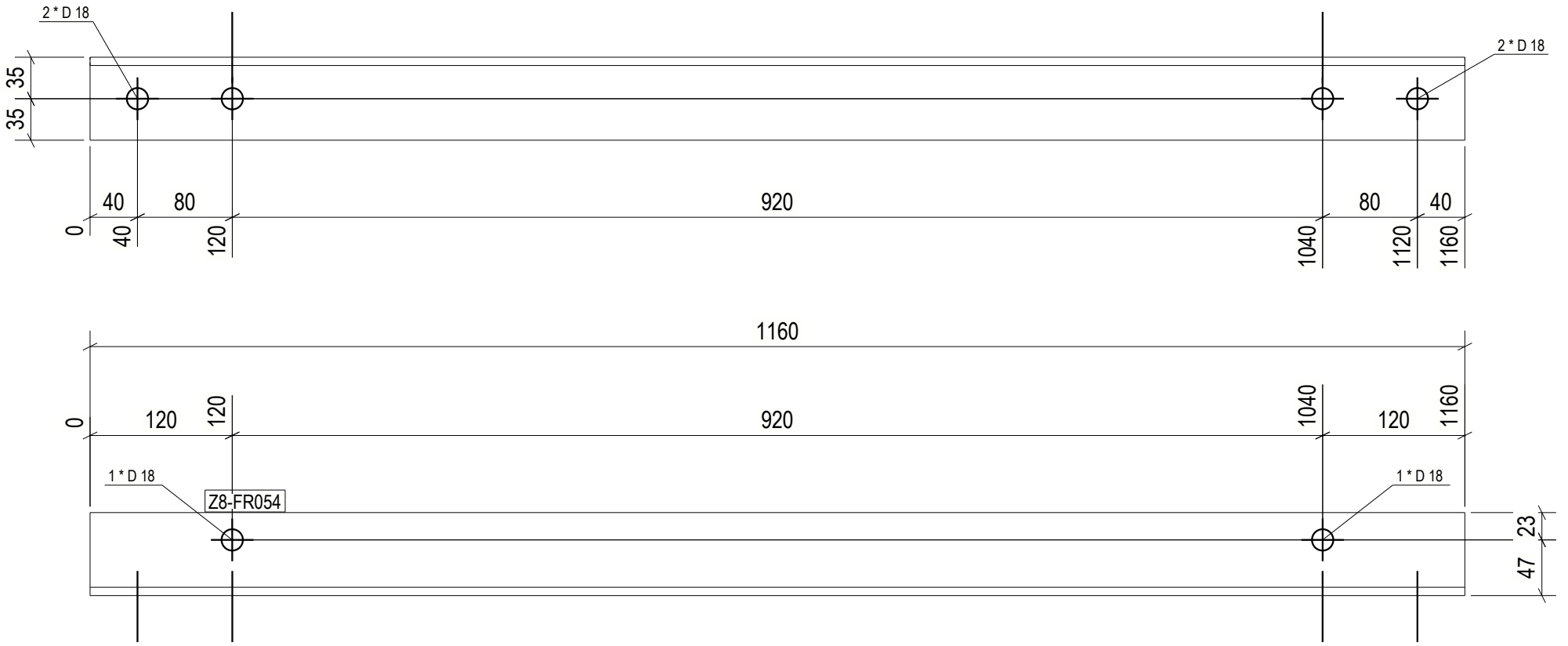

1 REQ'D AS DRAWN MK'D Z8-FR054

6 October Monorail
Engineering Unit
Valid For Construction

GENERAL NOTES:

1. THE DIMENSIONS SHOWN ARE NOMINAL (IN MILLIMETERS), U.N.O.
2. WELD SIZESHALL BE AISC MINIMUM OF 6 mm UNLESS NOTED OTHERWISE.
3. ALL FIELD WELDS SHALL BE INSPECTED PER QUALITY ASSURANCE AND SPECIAL INSPECTIONS.

REFERENCE DRAWINGS

1	93M-BOA-NAT-LOT-04833
2	93M-BOA-NAT-LOT-09170
3	93M-BOA-NAT-LOT-01976
4	93M-BOA-NAT-LOT-20021
5	
6	
7	
8	
9	

6TH OF OCTOBER CITY RAIL TRANSIT MONORAIL

The Authority | Hill International Consultant | Main Contractor | Structural Designer

KEY PLAN:

REV.	DATE	DSG	CHK	APP	AMENDMENTS	STATUS
B	12/05/2023	M.KH	M.KH	DR.M.M	ISSUED FOR INFORMATION	IFI
A	11/20/2022	M.KH	M.KH	DR.M.M	ISSUED FOR INFORMATION	IFI

SCALE: AS SHOWN | SHOPDRAWING | DATE: 12/05/2023

DRAWING TITLE
6TH OF OCTOBER MONORAIL
SERVICE WALKWAYS
ZONE (1008)
Z8-FR054

Project Code	Rubric	Initiator	Lot	Ref	Number	Revision
9 3 M	0 4 7 6	A C C	6 0 D	E P	D W G	0 8 5 1 1	B

Tekla structures

approval is subject to approval of coordination package between multi-discipline

REVIEWED WITH COMMENT
MONORAILS PROJECT

All holes are 22mm U.N.O Length & Area & Weight per piece

Mark	Profile	Grade	QTY	Length	Area	Weight
Z8-FR053	UPN160	S235JR	1	5918.0	3.25	111.5

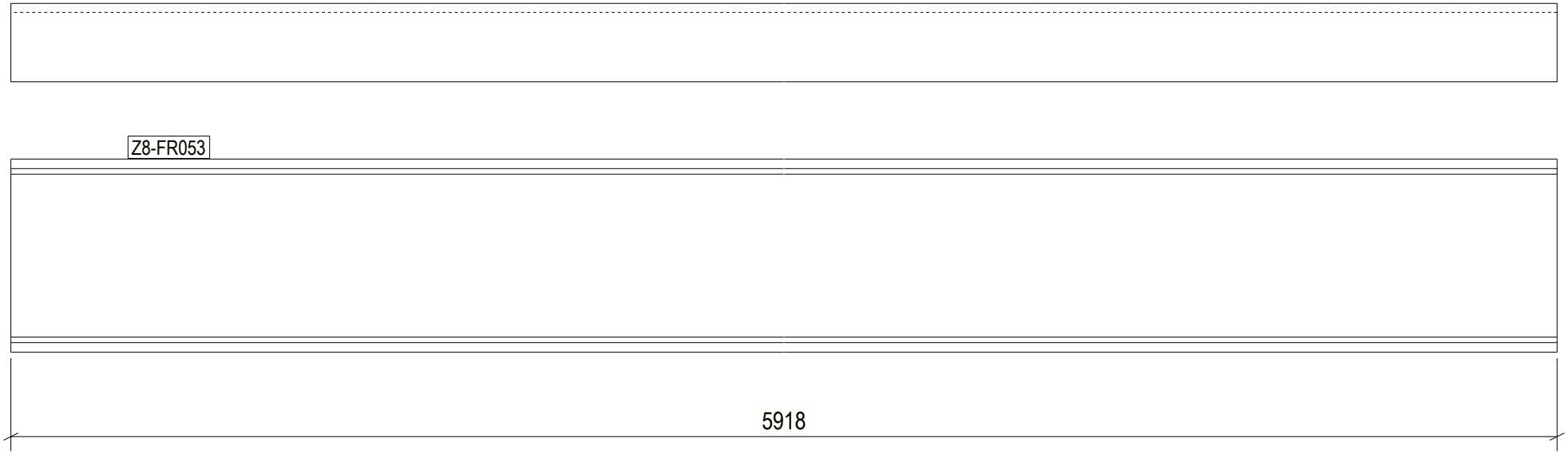

1 REQ'D AS DRAWN MK'D Z8-FR053

6 October Monorail
Engineering Unit
Valid For Construction

GENERAL NOTES:

1. THE DIMENSIONS SHOWN ARE NOMINAL (IN MILLIMETERS), U.N.O.
2. WELD SIZESHALL BE AISC MINIMUM OF 6 mm UNLESS NOTED OTHERWISE.
3. ALL FIELD WELDS SHALL BE INSPECTED PER QUALITY ASSURANCE AND SPECIAL INSPECTIONS.

REFERENCE DRAWINGS

1	93M-BOA-NAT-LOT-04833
2	93M-BOA-NAT-LOT-09170
3	93M-BOA-NAT-LOT-01976
4	93M-BOA-NAT-LOT-20021
5	
6	
7	
8	
9	

6TH OF OCTOBER CITY RAIL TRANSIT MONORAIL

The Authority — Hill International Consultant — Main Contractor — Structural Designer

KEY PLAN:

SCALE	SHOPDRAWING	DATE
AS SHOWN		12/09/2023

REV.	DATE	DSG	CHK	APP	AMENDMENTS	STATUS
B	12/05/2023	M.KH	M.KH	DR.M.M	ISSUED FOR INFORMATION	IFI
A	11/20/2022	M.KH	M.KH	DR.M.M	ISSUED FOR INFORMATION	IFI

DRAWING TITLE

6TH OF OCTOBER MONORAIL
SERVICE WALKWAYS
ZONE (1008)
Z8-FR053

Project Code	Rubric	Initiator	Lot	Ref	Number	Revision
93M	047	ACC	60	DEP	DWG	08512	B

Tekla structures

All holes are 22mm U.N.O Length & Area & Weight per piece

Mark	Profile	Grade	QTY	Length	Area	Weight
Z8-FR052	L70*7	S235JR	1	1160.2	0.33	8.5

approval is subject to approval of coordination package between multi-discipline

REVIEWED WITH COMMENT
MONORAILS PROJECT

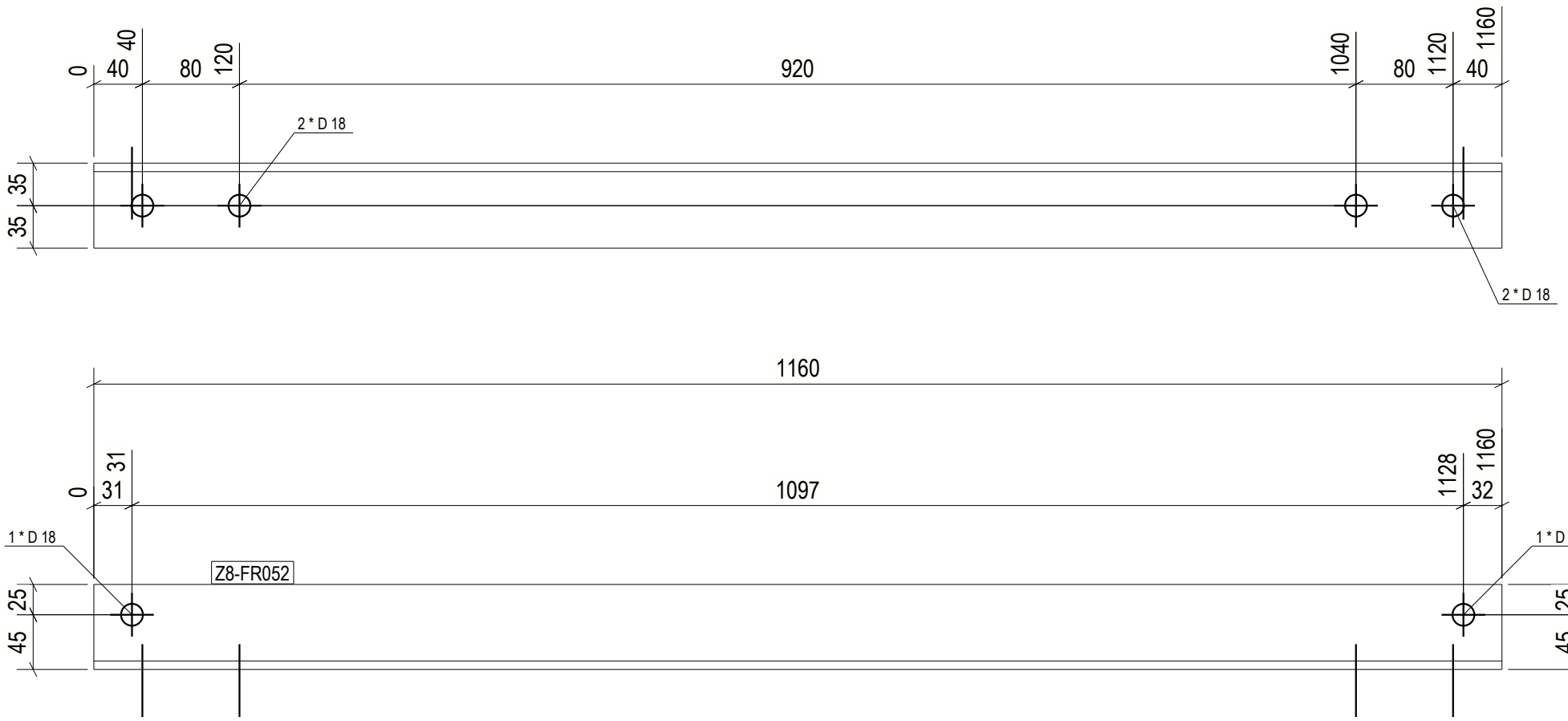

1 REQ'D AS DRAWN MK'D Z8-FR052

6 October Monorail
Engineering Unit
Valid For Construction

GENERAL NOTES:

1. THE DIMENSIONS SHOWN ARE NOMINAL (IN MILLIMETERS), U.N.O.
2. WELD SIZESHALL BE AISC MINIMUM OF 6 mm UNLESS NOTED OTHERWISE.
3. ALL FIELD WELDS SHALL BE INSPECTED PER QUALITY ASSURANCE AND SPECIAL INSPECTIONS.

REFERENCE DRAWINGS

1	93M-BOA-NAT-LOT-04833
2	93M-BOA-NAT-LOT-09170
3	93M-BOA-NAT-LOT-01976
4	93M-BOA-NAT-LOT-20021
5	
6	
7	
8	
9	

6TH OF OCTOBER CITY RAIL TRANSIT MONORAIL

The Authority | Hill International Consultant | Main Contractor | Structural Designer

KEY PLAN:

SCALE	SHOPDRAWING	DATE
AS SHOWN		12/09/2023

REV	DATE	DSG	CHK	APP	AMENDMENTS	STATUS
B	12/05/2023	M.KH	M.KH	DR.BM	ISSUED FOR INFORMATION	IFI
A	11/20/2022	M.KH	M.KH	DR.BM	ISSUED FOR INFORMATION	IFI

DRAWING TITLE

6TH OF OCTOBER MONORAIL
SERVICE WALKWAYS
ZONE (1008)
Z8-FR052

Project Code	Rubric	Initiator	Lot	Ref	Number	Revision
93M	047	6ACC	60DEP	DWG	0851	B

Tekla structures

approval is subject to approval of coordination package between multi-discipline

REVIEWED WITH COMMENT
MONORAILS PROJECT

All holes are 22mm U.N.O Length & Area & Weight per piece

Mark	Profile	Grade	QTY	Length	Area	Weight
Z8-FR051	L70*7	S235JR	1	1160.2	0.33	8.5

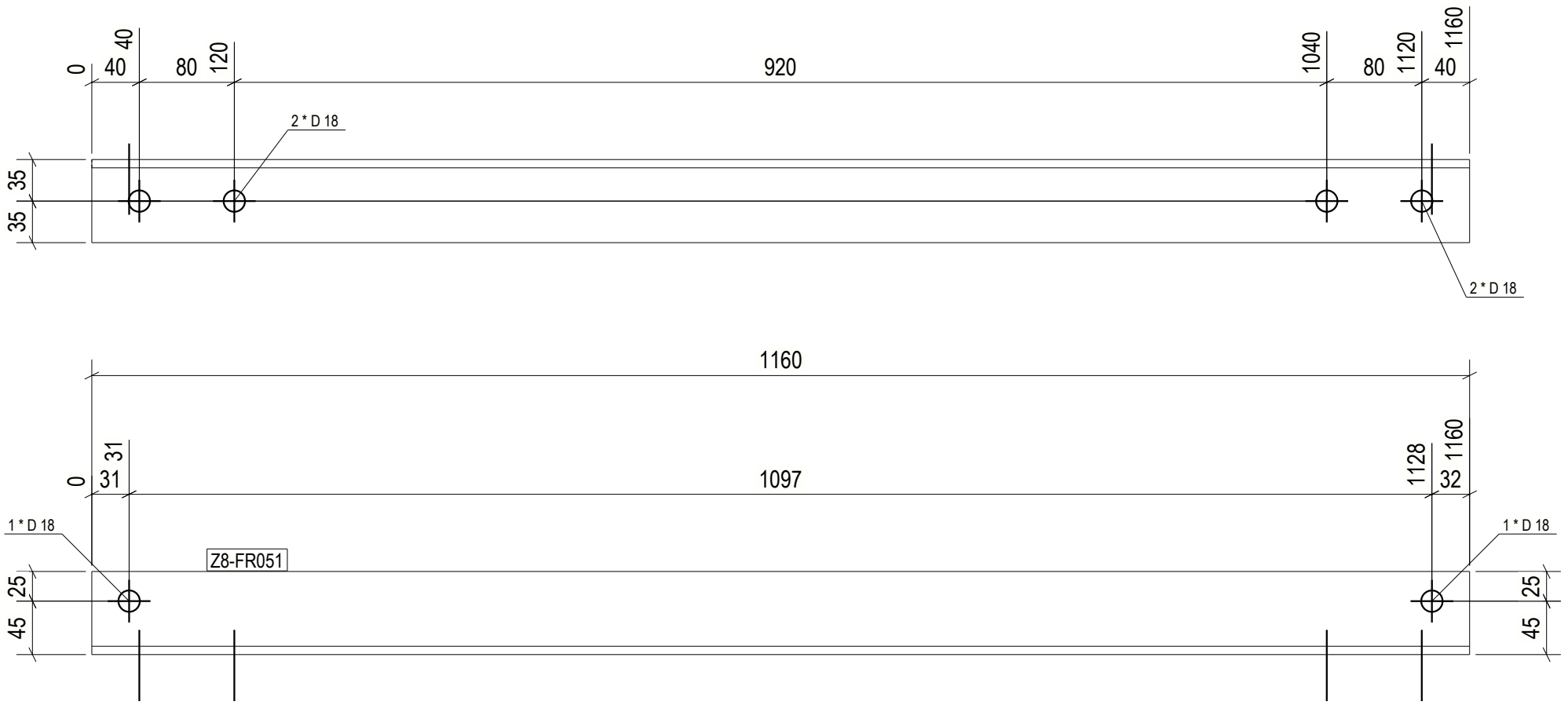

1 REQ'D AS DRAWN MK'D Z8-FR051

6 October Monorail
Engineering Unit
Valid For Construction

GENERAL NOTES:

1. THE DIMENSIONS SHOWN ARE NOMINAL (IN MILLIMETERS), U.N.O.
2. WELD SIZESHALL BE AISC MINIMUM OF 6 mm UNLESS NOTED OTHERWISE.
3. ALL FIELD WELDS SHALL BE INSPECTED PER QUALITY ASSURANCE AND SPECIAL INSPECTIONS.

REFERENCE DRAWINGS

1	93M-BOA-NAT-LOT-04833
2	93M-BOA-NAT-LOT-09170
3	93M-BOA-NAT-LOT-01976
4	93M-BOA-NAT-LOT-20021
5	
6	
7	
8	
9	

6TH OF OCTOBER CITY RAIL TRANSIT MONORAIL

The Authority — Hill International Consultant — Main Contractor — Structural Designer

KEY PLAN:

REV	DATE	DSG	CHK	APP	AMENDMENTS	STATUS
B	12/05/2023	M.KH	M.KH	DR.BM	ISSUED FOR INFORMATION	IFI
A	11/20/2022	M.KH	M.KH	DR.BM	ISSUED FOR INFORMATION	IFI

SCALE: AS SHOWN | SHOPDRAWING | DATE: 12/05/2023

DRAWING TITLE
6TH OF OCTOBER MONORAIL
SERVICE WALKWAYS
ZONE (1008)
Z8-FR051

Project Code	Rubric	Initiator	Lot	Ref	Number	Revision
93M	047	6ACC	60DEP	DWG	0851	B

Tekla structures

approval is subject to approval of coordination package between multi-discipline

REVIEWED WITH COMMENT
MONORAILS PROJECT

All holes are 22mm U.N.O Length & Area & Weight per piece

Mark	Profile	Grade	QTY	Length	Area	Weight
Z8-FR050	UPN160	S235JR	1	5920.0	3.26	111.5

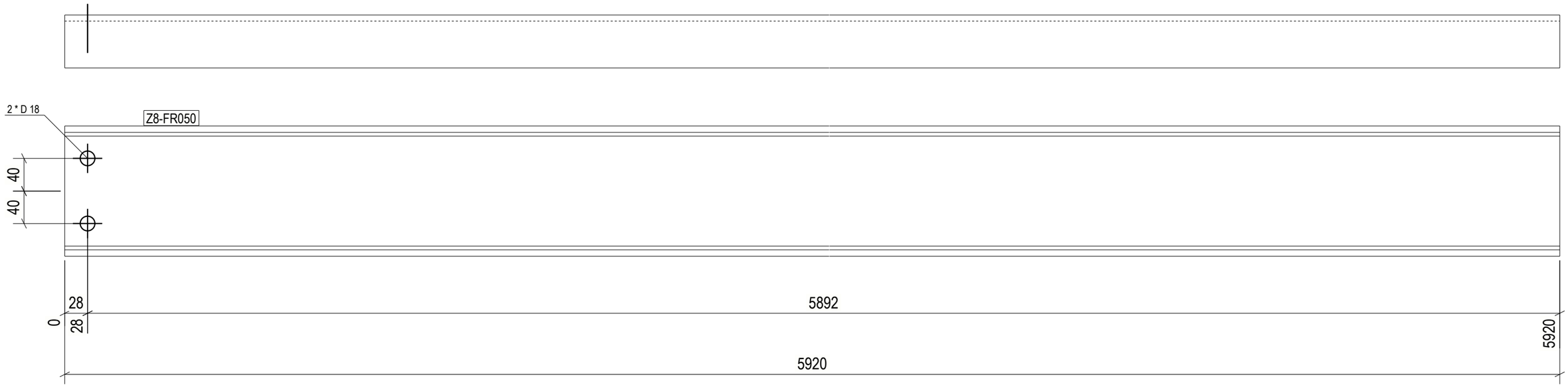

1 REQ'D AS DRAWN MK'D Z8-FR050

GENERAL NOTES:

1. THE DIMENSIONS SHOWN ARE NOMINAL (IN MILLIMETERS), U.N.O.
2. WELD SIZESHALL BE AISC MINIMUM OF 6 mm UNLESS NOTED OTHERWISE.
3. ALL FIELD WELDS SHALL BE INSPECTED PER QUALITY ASSURANCE AND SPECIAL INSPECTIONS.

REFERENCE DRAWINGS

1	93M-BOA-NAT-LOT-04833
2	93M-BOA-NAT-LOT-09170
3	93M-BOA-NAT-LOT-01976
4	93M-BOA-NAT-LOT-20021
5	
6	
7	
8	
9	

6TH OF OCTOBER CITY RAIL TRANSIT MONORAIL

The Authority | Consultant: Hill International | Main Contractor: ORASCOM CONSTRUCTION, BOMBARDIER | Structural Designer: INNOVA TRANSPORTATION

KEY PLAN:

6 October Monorail
Engineering Unit
Valid For Construction

SCALE	SHOP DRAWING	DATE
AS SHOWN		12/05/2023

REV	DATE	DSN	CHK	APP	AMENDMENTS/REVISION	STATUS
B	12/05/2023	M.KH	M.KH	DR.M.M	ISSUED FOR INFORMATION	IFI

DRAWING TITLE

6TH OF OCTOBER MONORAIL
SERVICE WALKWAYS
ZONE (1008)
Z8-FR050

Project Code	Rubric	Initiator	Lot	Ref	Number	Revision
93	M047	ACC	600	DEP	DWG	08515	B

Tekla structures

approval is subject to approval of coordination package between multi-discipline

REVIEWED WITH COMMENT MONORAILS PROJECT

All holes are 22mm U.N.O Length & Area & Weight per piece						
Z8-FR049	UPN160	S235JR	1	5920.0	3.26	111.5
Mark	Profile	Grade	QTY	Length	Area	Weight

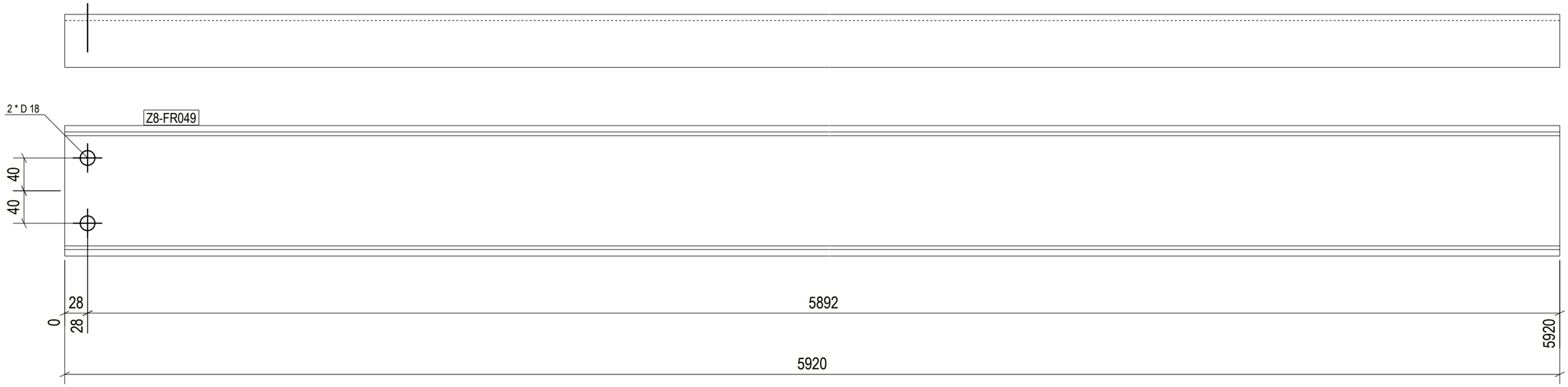

1 REQ'D AS DRAWN MK'D Z8-FR049

6 October Monorail Engineering Unit Valid For Construction

GENERAL NOTES:

1. THE DIMENSIONS SHOWN ARE NOMINAL (IN MILLIMETERS), U.N.O.
2. WELD SIZESHALL BE AISC MINIMUM OF 6 mm UNLESS NOTED OTHERWISE.
3. ALL FIELD WELDS SHALL BE INSPECTED PER QUALITY ASSURANCE AND SPECIAL INSPECTIONS.

REFERENCE DRAWINGS

1	93M-BOA-NAT-LOT-04833
2	93M-BOA-NAT-LOT-09170
3	93M-BOA-NAT-LOT-01976
4	93M-BOA-NAT-LOT-20021
5	
6	
7	
8	
9	

6TH OF OCTOBER CITY RAIL TRANSIT MONORAIL

The Authority | Hill International Consultant | ORASCOM BOMBARDIER Main Contractor | INNOVA Structural Designer

KEY PLAN:

SCALE	SHOP DRAWING	DATE
AS SHOWN		12/05/2023

REV	DATE	DSG	CHK	APP	AMENDMENTS	STATUS
B	12/05/2023	M.KH	M.KH	DR.M.M	ISSUED FOR INFORMATION	IFI

DRAWING TITLE

6TH OF OCTOBER MONORAIL SERVICE WALKWAYS ZONE (1008)

Z8-FR049

Project Code	Rubric	Initiator	Lot	Ref	Number	Revision
93M	0476	ACC	60DEP	DWG	08516	B

Tekla structures

approval is subject to approval of coordination package between multi-discipline

REVIEWED WITH COMMENT
MONORAILS PROJECT

All holes are 22mm U.N.O Length & Area & Weight per piece

Mark	Profile	Grade	QTY	Length	Area	Weight
Z8-FR048	UPN160	S235JR	1	5920.0	3.26	111.5

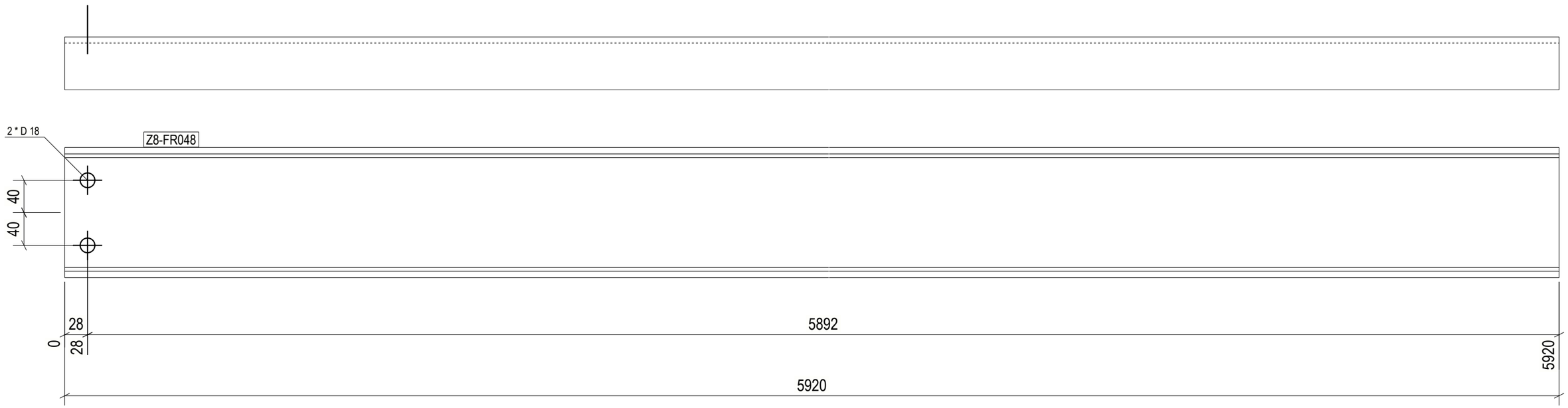

1 REQ'D AS DRAWN MK'D Z8-FR048

6 October Monorail
Engineering Unit
Valid For Construction

GENERAL NOTES:

1. THE DIMENSIONS SHOWN ARE NOMINAL (IN MILLIMETERS), U.N.O.
2. WELD SIZESHALL BE AISC MINIMUM OF 6 mm UNLESS NOTED OTHERWISE.
3. ALL FIELD WELDS SHALL BE INSPECTED PER QUALITY ASSURANCE AND SPECIAL INSPECTIONS.

REFERENCE DRAWINGS

1	93M-BOA-NAT-LOT-04833
2	93M-BOA-NAT-LOT-09170
3	93M-BOA-NAT-LOT-01976
4	93M-BOA-NAT-LOT-20021
5	
6	
7	
8	
9	

6TH OF OCTOBER CITY RAIL TRANSIT MONORAIL

The Authority — Hill International Consultant — Main Contractor — Structural Designer

KEY PLAN:

SCALE: AS SHOWN | SHOP DRAWING | DATE: 12/05/2023

REV	DATE	DSN	CHK	APP	AMENDMENTS/REVISION	STATUS
B	12/05/2023	M.KH	M.KH	DR.M.M	ISSUED FOR INFORMATION	IFI

DRAWING TITLE

6TH OF OCTOBER MONORAIL
SERVICE WALKWAYS
ZONE (1008)
Z8-FR048

Project Code	Rubric	Initiator	Lot	Ref	Number	Revision
93	M047	6 ACC	60 DEP	DWG	0851	7 B

Tekla structures

approval is subject to approval of coordination package between multi-discipline

REVIEWED WITH COMMENT MONORAILS PROJECT

All holes are 22mm U.N.O Length & Area & Weight per piece						
Z8-FR047	UPN160	S235JR	1	5920.0	3.26	111.5
Mark	Profile	Grade	QTY	Length	Area	Weight

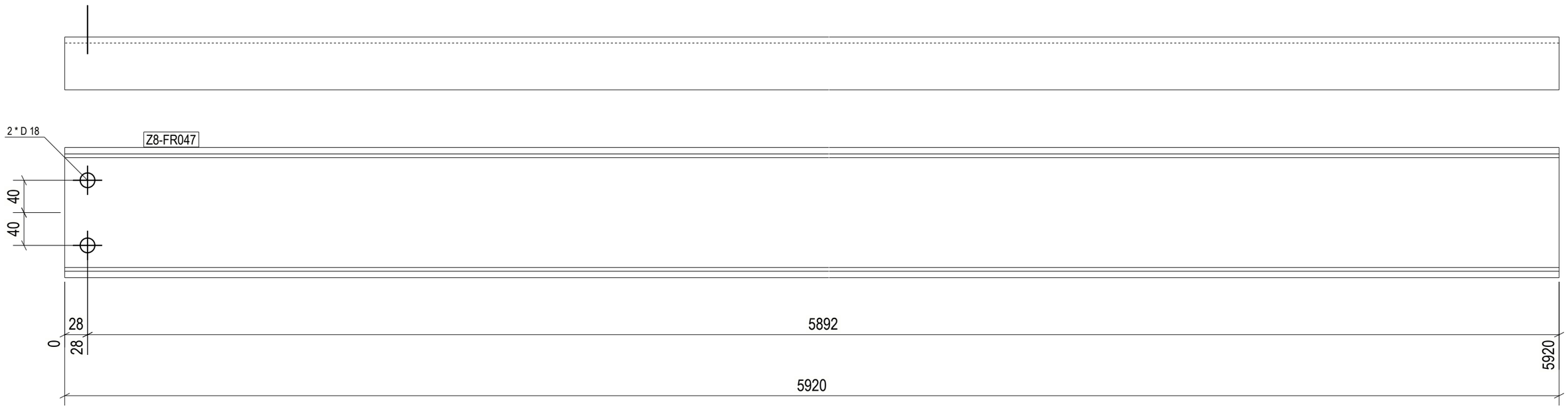

1 REQ'D AS DRAWN MK'D Z8-FR047

6 October Monorail Engineering Unit Valid For Construction

GENERAL NOTES:

1. THE DIMENSIONS SHOWN ARE NOMINAL (IN MILLIMETERS), U.N.O.
2. WELD SIZESHALL BE AISC MINIMUM OF 6 mm UNLESS NOTED OTHERWISE.
3. ALL FIELD WELDS SHALL BE INSPECTED PER QUALITY ASSURANCE AND SPECIAL INSPECTIONS.

REFERENCE DRAWINGS

1	93M-BOA-NAT-LOT-04833
2	93M-BOA-NAT-LOT-09170
3	93M-BOA-NAT-LOT-01976
4	93M-BOA-NAT-LOT-20021
5	
6	
7	
8	
9	

6TH OF OCTOBER CITY RAIL TRANSIT MONORAIL

The Authority | Hill International Consultant | ORASCOM BOMBARDIER Main Contractor | INNOVA Structural Designer

KEY PLAN:

SCALE	SHOP DRAWING	DATE
AS SHOWN		12/05/2023

REV	DATE	DSG	CHK	APP	AMENDMENTS	STATUS
B	12/05/2023	M.KH	M.KH	DR.M.M	ISSUED FOR INFORMATION	IFI

DRAWING TITLE

6TH OF OCTOBER MONORAIL SERVICE WALKWAYS ZONE (1008)

Z8-FR047

Project Code	Rubric	Initiator	Lot	Ref	Number	Revision
93M	0476	ACC	60DEP	DWG	08518	B

Tekla structures

All holes are 22mm U.N.O Length & Area & Weight per piece

Mark	Profile	Grade	QTY	Length	Area	Weight
Z8-FR046	L70*7	S235JR	2	984.7	0.28	7.2

approval is subject to approval of coordination package between multi-discipline

REVIEWED WITH COMMENT
MONORAILS PROJECT

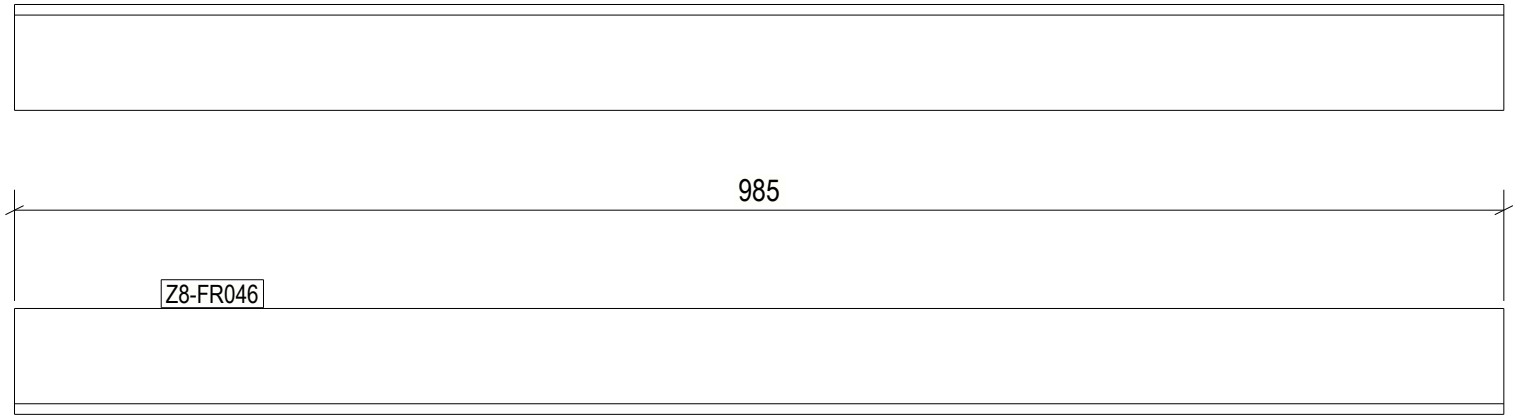

2 REQ'D AS DRAWN MK'D Z8-FR046

6 October Monorail
Engineering Unit
Valid For Construction

GENERAL NOTES:

1. THE DIMENSIONS SHOWN ARE NOMINAL (IN MILLIMETERS), U.N.O.
2. WELD SIZESHALL BE AISC MINIMUM OF 6 mm UNLESS NOTED OTHERWISE.
3. ALL FIELD WELDS SHALL BE INSPECTED PER QUALITY ASSURANCE AND SPECIAL INSPECTIONS.

REFERENCE DRAWINGS

1	93M-BOA-NAT-LOT-04833
2	93M-BOA-NAT-LOT-09170
3	93M-BOA-NAT-LOT-01976
4	93M-BOA-NAT-LOT-20021
5	
6	
7	
8	
9	

6TH OF OCTOBER CITY RAIL TRANSIT MONORAIL

The Authority | Hill International Consultant | Main Contractor | Structural Designer

KEY PLAN:

REV.	DATE	DSG	CHK	APP	AMENDMENTS	STATUS
B	12/05/2023	M.KH	M.KH	DR.M.M	ISSUED FOR INFORMATION	IFI
A	11/20/2022	M.KH	M.KH	DR.M.M	ISSUED FOR INFORMATION	IFI

SCALE: AS SHOWN | SHOPDRAWING | DATE: 12/05/2023

DRAWING TITLE
6TH OF OCTOBER MONORAIL
SERVICE WALKWAYS
ZONE (1008)
Z8-FR046

Project Code	Rubric	Initiator	Lot	Ref	Number	Revision
93M	047	ACC	60DEP	DWG	08519	B

Tekla structures

approval is subject to approval of coordination package between multi-discipline

REVIEWED WITH COMMENT MONORAILS PROJECT

All holes are 22mm U.N.O Length & Area & Weight per piece						
Z8-FR045	UPN160	S235JR	1	4144.0	2.28	78.1
Mark	Profile	Grade	QTY	Length	Area	Weight

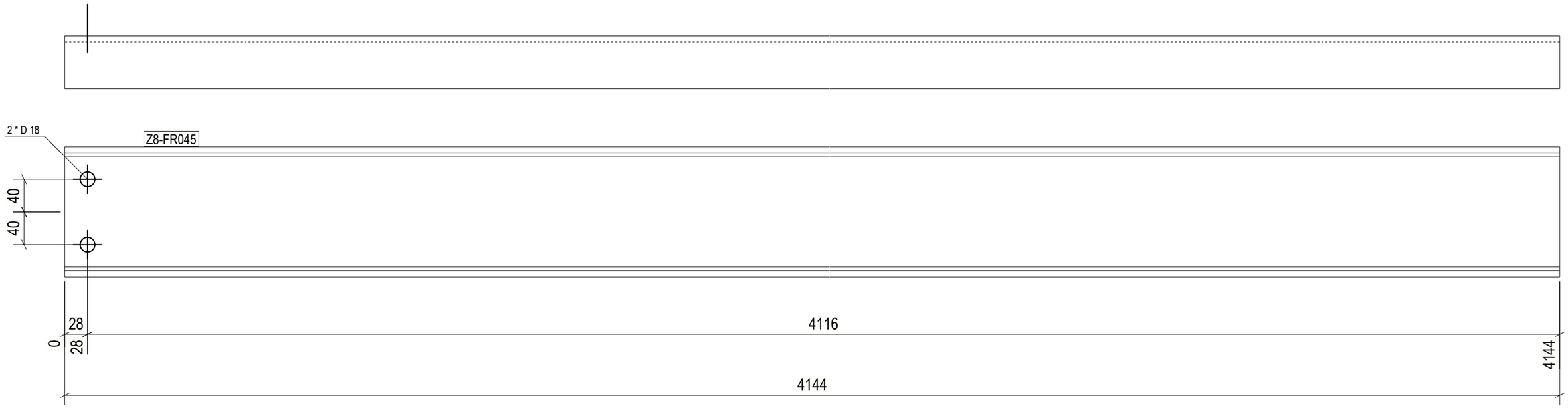

1 REQ'D AS DRAWN MK'D Z8-FR045

6 October Monorail Engineering Unit Valid For Construction

GENERAL NOTES:

1. THE DIMENSIONS SHOWN ARE NOMINAL (IN MILLIMETERS), U.N.O.
2. WELD SIZESHALL BE AISC MINIMUM OF 6 mm UNLESS NOTED OTHERWISE.
3. ALL FIELD WELDS SHALL BE INSPECTED PER QUALITY ASSURANCE AND SPECIAL INSPECTIONS.

REFERENCE DRAWINGS

1	93M-BOA-NAT-LOT-04833
2	93M-BOA-NAT-LOT-09170
3	93M-BOA-NAT-LOT-01976
4	93M-BOA-NAT-LOT-20021
5	
6	
7	
8	
9	

6TH OF OCTOBER CITY RAIL TRANSIT MONORAIL

The Authority | Hill International Consultant | ORASCOM BOMBARDIER Main Contractor | INNOVA Structural Designer

KEY PLAN:

SCALE	SHOP DRAWING	DATE
AS SHOWN		12/05/2023

REV	DATE	DSG	CHK	APP	AMENDMENTS	STATUS
B	12/05/2023	M.KH	M.KH	DR.M.M	ISSUED FOR INFORMATION	IFI

DRAWING TITLE

6TH OF OCTOBER MONORAIL SERVICE WALKWAYS ZONE (1008)
Z8-FR045

Project Code	Rubric	Initiator	Lot	Ref	Number	Revision
93M	0476	ACC	60DEP	DWG	08520	B

Tekla structures

approval is subject to approval of coordination package between multi-discipline

REVIEWED WITH COMMENT MONORAILS PROJECT

All holes are 22mm U.N.O Length & Area & Weight per piece						
Z8-FR044	UPN160	S235JR	1	4144.0	2.28	78.1
Mark	Profile	Grade	QTY	Length	Area	Weight

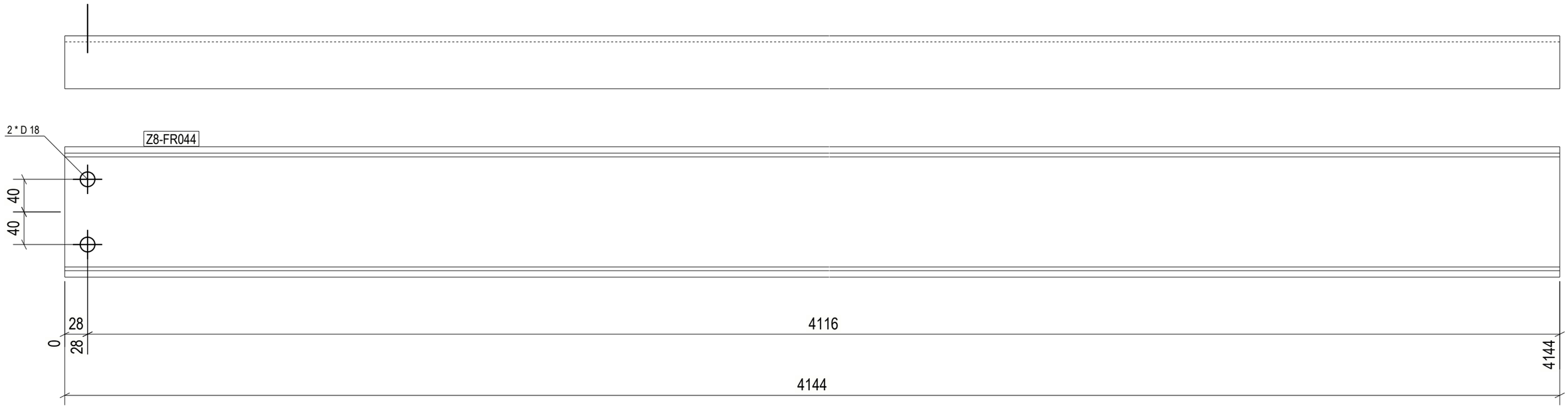

1 REQ'D AS DRAWN MK'D Z8-FR044

6 October Monorail Engineering Unit Valid For Construction

GENERAL NOTES:

1. THE DIMENSIONS SHOWN ARE NOMINAL (IN MILLIMETERS), U.N.O.
2. WELD SIZESHALL BE AISC MINIMUM OF 6 mm UNLESS NOTED OTHERWISE.
3. ALL FIELD WELDS SHALL BE INSPECTED PER QUALITY ASSURANCE AND SPECIAL INSPECTIONS.

REFERENCE DRAWINGS

1	93M-BOA-NAT-LOT-04833
2	93M-BOA-NAT-LOT-09170
3	93M-BOA-NAT-LOT-01976
4	93M-BOA-NAT-LOT-20021
5	
6	
7	
8	
9	

6TH OF OCTOBER CITY RAIL TRANSIT MONORAIL

The Authority | Hill International Consultant | ORASCOM BOMBARDIER Main Contractor | INNOVA Structural Designer

KEY PLAN:

SCALE	SHOP DRAWING	DATE
AS SHOWN		12/05/2023

REV	DATE	DSG	CHK	APP	AMENDMENTS	STATUS
B	12/05/2023	M.KH	M.KH	DR.M.M	ISSUED FOR INFORMATION	IFI

DRAWING TITLE

6TH OF OCTOBER MONORAIL SERVICE WALKWAYS ZONE (1008)

Z8-FR044

Project Code	Rubric	Initiator	Lot	Ref	Number	Revision
93M	0476	ACC	60DEP	DWG	08521	B

Tekla structures

approval is subject to approval of coordination package between multi-discipline

REVIEWED WITH COMMENT
MONORAILS PROJECT

All holes are 22mm U.N.O Length & Area & Weight per piece

Mark	Profile	Grade	QTY	Length	Area	Weight
Z8-FR043	UPN160	S235JR	1	4144.0	2.28	78.1

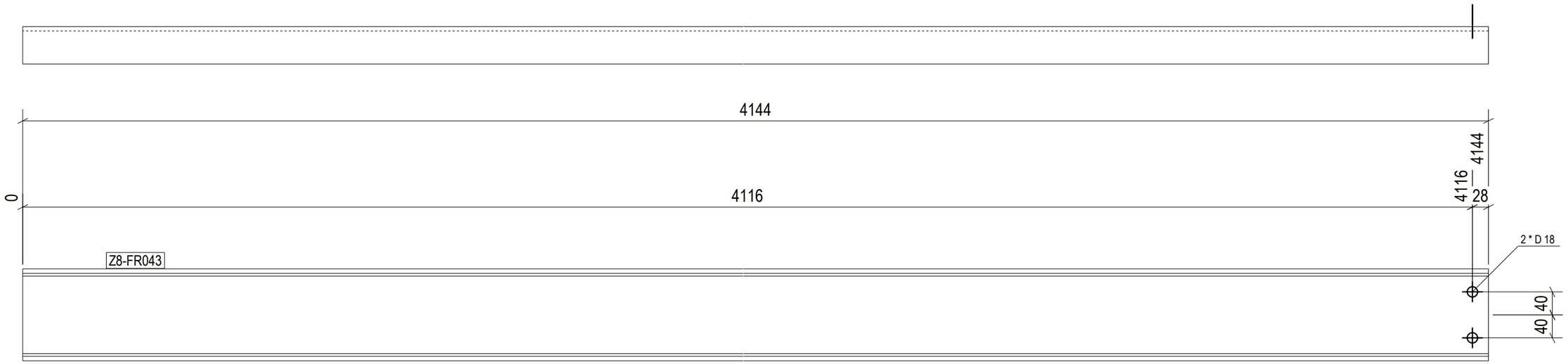

1 REQ'D AS DRAWN MK'D Z8-FR043

GENERAL NOTES:

1. THE DIMENSIONS SHOWN ARE NOMINAL (IN MILLIMETERS), U.N.O.
2. WELD SIZESHALL BE AISC MINIMUM OF 6 mm UNLESS NOTED OTHERWISE.
3. ALL FIELD WELDS SHALL BE INSPECTED PER QUALITY ASSURANCE AND SPECIAL INSPECTIONS.

REFERENCE DRAWINGS

1	93M-BOA-NAT-LOT-04833
2	93M-BOA-NAT-LOT-09170
3	93M-BOA-NAT-LOT-01976
4	93M-BOA-NAT-LOT-20021
5	
6	
7	
8	
9	

6TH OF OCTOBER CITY RAIL TRANSIT MONORAIL

The Authority | Consultant: Hill International | Main Contractor | Structural Designer

KEY PLAN:

6 October Monorail
Engineering Unit
Valid For Construction

SCALE	SHOP DRAWING	DATE
AS SHOWN		12/05/2023

REV	DATE	DWN	CHK	APP	AMENDMENTS DESCRIPTION	STATUS
B	12/05/2023	M.KH	M.KH	DR.M.M	ISSUED FOR INFORMATION	IFI

DRAWING TITLE

6TH OF OCTOBER MONORAIL
SERVICE WALKWAYS
ZONE (1008)
Z8-FR043

Project Code	Rubric	Initiator	Lot	Ref	Number	Revision
93M	0476	ACC	60DEP	DWG	08522	B

Tekla structures

approval is subject to approval of coordination package between multi-discipline

REVIEWED WITH COMMENT MONORAILS PROJECT

All holes are 22mm U.N.O Length & Area & Weight per piece						
Z8-FR042	UPN160	S235JR	1	4144.0	2.28	78.1
Mark	Profile	Grade	QTY	Length	Area	Weight

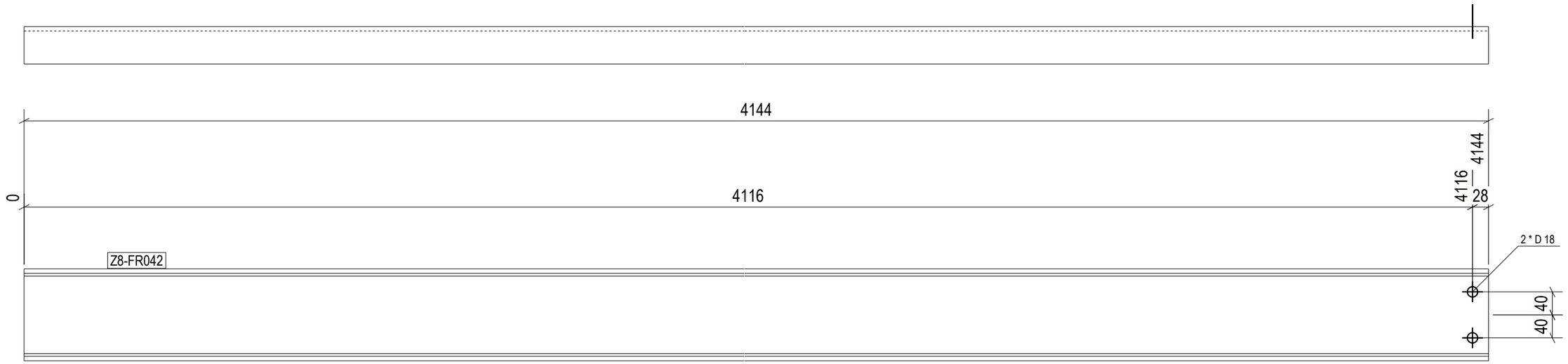

1 REQ'D AS DRAWN MK'D Z8-FR042

6 October Monorail Engineering Unit
Valid For Construction

GENERAL NOTES:

1. THE DIMENSIONS SHOWN ARE NOMINAL (IN MILLIMETERS), U.N.O.
2. WELD SIZESHALL BE AISC MINIMUM OF 6 mm UNLESS NOTED OTHERWISE.
3. ALL FIELD WELDS SHALL BE INSPECTED PER QUALITY ASSURANCE AND SPECIAL INSPECTIONS.

REFERENCE DRAWINGS

1	93M-BOA-NAT-LOT-04833
2	93M-BOA-NAT-LOT-09170
3	93M-BOA-NAT-LOT-01976
4	93M-BOA-NAT-LOT-20021
5	
6	
7	
8	
9	

6TH OF OCTOBER CITY RAIL TRANSIT MONORAIL

The Authority | Hill International Consultant | Main Contractor | Structural Designer

KEY PLAN:

SCALE	SHOP DRAWING	DATE
AS SHOWN		12/05/2023

REV	DATE	DSN	CHK	APP	AMENDMENTS	STATUS
B	12/05/2023	M.KH	M.KH	DR.M.M	ISSUED FOR INFORMATION	IFI

DRAWING TITLE

6TH OF OCTOBER MONORAIL SERVICE WALKWAYS ZONE (1008)
Z8-FR042

Project Code	Rubric	Initiator	Lot	Ref	Number	Revision
93M	0476	ACC	60DEP	DWG	08523	B

Tekla structures

approval is subject to approval of coordination package between multi-discipline

REVIEWED WITH COMMENT MONORAILS PROJECT

All holes are 22mm U.N.O Length & Area & Weight per piece						
Z8-FR041	UPN160	S235JR	1	2368.0	1.30	44.6
Mark	Profile	Grade	QTY	Length	Area	Weight

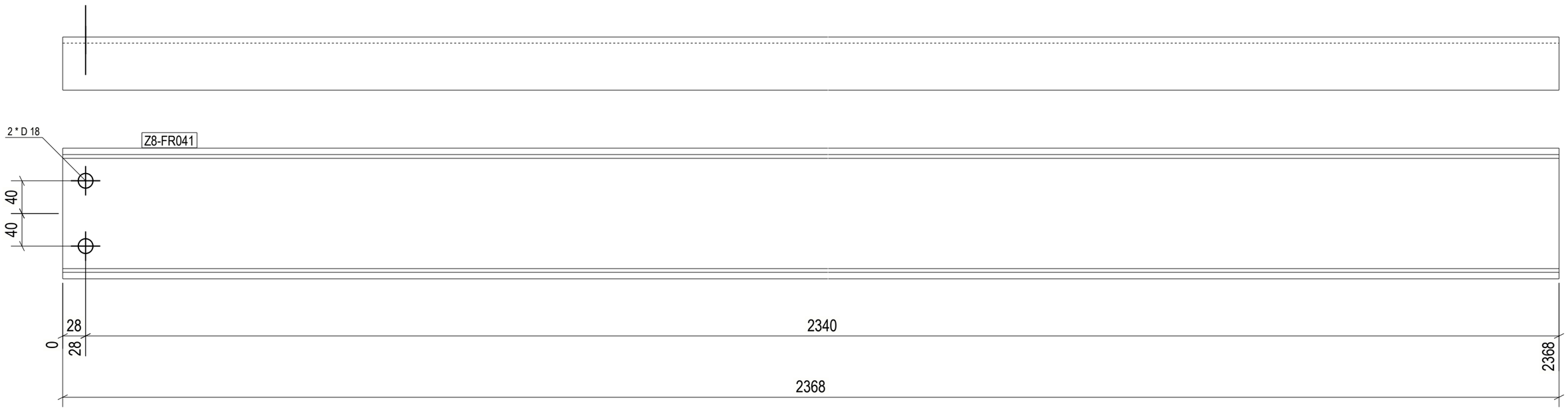

1 REQ'D AS DRAWN MK'D Z8-FR041

6 October Monorail Engineering Unit
Valid For Construction

GENERAL NOTES:

1. THE DIMENSIONS SHOWN ARE NOMINAL (IN MILLIMETERS), U.N.O.
2. WELD SIZESHALL BE AISC MINIMUM OF 6 mm UNLESS NOTED OTHERWISE.
3. ALL FIELD WELDS SHALL BE INSPECTED PER QUALITY ASSURANCE AND SPECIAL INSPECTIONS.

REFERENCE DRAWINGS

1	93M-BOA-NAT-LOT-04833
2	93M-BOA-NAT-LOT-09170
3	93M-BOA-NAT-LOT-01976
4	93M-BOA-NAT-LOT-20021
5	
6	
7	
8	
9	

6TH OF OCTOBER CITY RAIL TRANSIT MONORAIL

The Authority | Hill International Consultant | ORASCOM BOMBARDIER Main Contractor | INNOVA Structural Designer

KEY PLAN:

SCALE	SHOP DRAWING	DATE
AS SHOWN		12/05/2023

REV	DATE	DSG	CHK	APP	AMENDMENTS	STATUS
B	12/05/2023	M.KH	M.KH	DR.M.M	ISSUED FOR INFORMATION	IFI

DRAWING TITLE

6TH OF OCTOBER MONORAIL SERVICE WALKWAYS ZONE (1008)
Z8-FR041

Project Code	Rubric	Initiator	Lot	Ref	Number	Revision
93M	0476	ACC	60DEP	DWG	08524	B

Tekla structures

approval is subject to approval of coordination package between multi-discipline

REVIEWED WITH COMMENT MONORAILS PROJECT

All holes are 22mm U.N.O Length & Area & Weight per piece						
Z8-FR040	UPN160	S235JR	1	2368.0	1.30	44.6
Mark	Profile	Grade	QTY	Length	Area	Weight

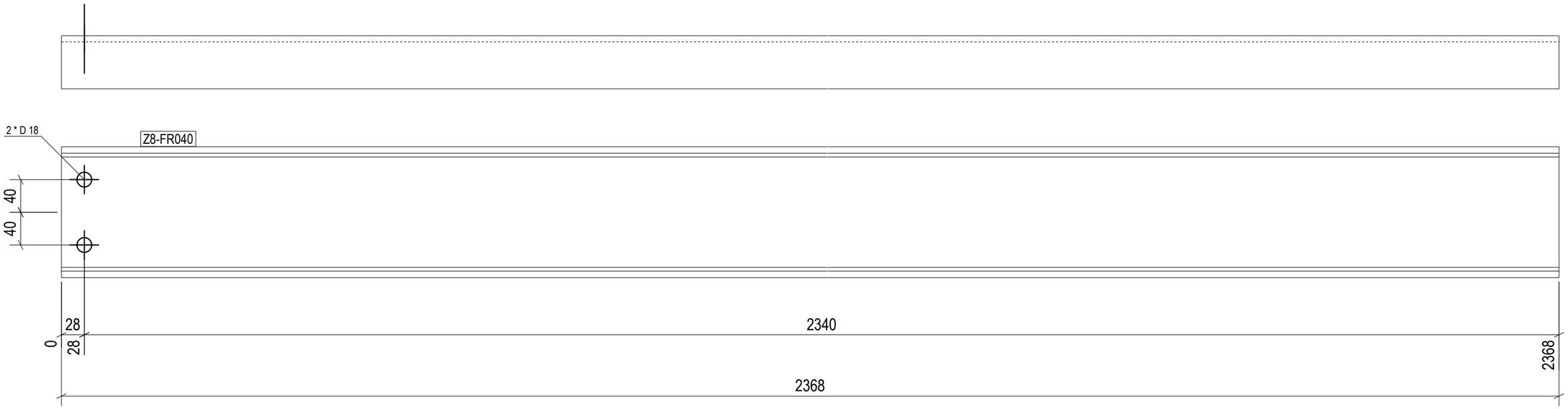

1 REQ'D AS DRAWN MK'D Z8-FR040

6 October Monorail Engineering Unit
Valid For Construction

GENERAL NOTES:

1. THE DIMENSIONS SHOWN ARE NOMINAL (IN MILLIMETERS), U.N.O.
2. WELD SIZESHALL BE AISC MINIMUM OF 6 mm UNLESS NOTED OTHERWISE.
3. ALL FIELD WELDS SHALL BE INSPECTED PER QUALITY ASSURANCE AND SPECIAL INSPECTIONS.

REFERENCE DRAWINGS

1	93M-BOA-NAT-LOT-04833
2	93M-BOA-NAT-LOT-09170
3	93M-BOA-NAT-LOT-01976
4	93M-BOA-NAT-LOT-20021
5	
6	
7	
8	
9	

6TH OF OCTOBER CITY RAIL TRANSIT MONORAIL

The Authority | Hill International Consultant | ORASCOM BOMBARDIER Main Contractor | INNOVA Structural Designer

KEY PLAN:

SCALE	SHOP DRAWING	DATE
AS SHOWN		12/05/2023

REV	DATE	DSG	CHK	APP	AMENDMENTS	STATUS
B	12/05/2023	M.KH	M.KH	DR.M.M	ISSUED FOR INFORMATION	IFI

DRAWING TITLE

6TH OF OCTOBER MONORAIL SERVICE WALKWAYS ZONE (1008)
Z8-FR040

Project Code	Rubric	Initiator	Lot	Ref	Number	Revision
93M	0476	ACC	60DEP	DWG	08525	B

Tekla structures

approval is subject to approval of coordination package between multi-discipline

REVIEWED WITH COMMENT
MONORAILS PROJECT

All holes are 22mm U.N.O Length & Area & Weight per piece						
Z8-FR039	UPN160	S235JR	1	2368.0	1.30	44.6
Mark	Profile	Grade	QTY	Length	Area	Weight

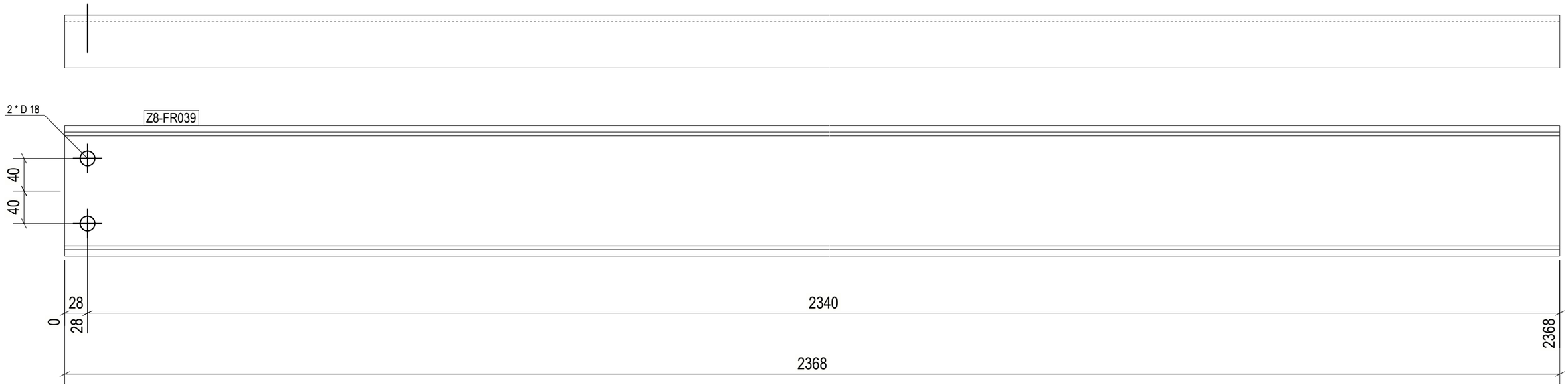

1 REQ'D AS DRAWN MK'D Z8-FR039

GENERAL NOTES:

1. THE DIMENSIONS SHOWN ARE NOMINAL (IN MILLIMETERS), U.N.O.
2. WELD SIZESHALL BE AISC MINIMUM OF 6 mm UNLESS NOTED OTHERWISE.
3. ALL FIELD WELDS SHALL BE INSPECTED PER QUALITY ASSURANCE AND SPECIAL INSPECTIONS.

REFERENCE DRAWINGS

1	93M-BOA-NAT-LOT-04833
2	93M-BOA-NAT-LOT-09170
3	93M-BOA-NAT-LOT-01976
4	93M-BOA-NAT-LOT-20021
5	
6	
7	
8	
9	

6TH OF OCTOBER CITY RAIL TRANSIT MONORAIL

The Authority — Hill International Consultant — Main Contractor — Structural Designer

KEY PLAN:

6 October Monorail Engineering Unit Valid For Construction

SCALE	SHOP DRAWING	DATE
AS SHOWN		12/05/2023

REV	DATE	DSN	CHK	APP	AMENDMENTS/REVISION	STATUS
B	12/05/2023	M.KH	M.KH	DR.M.M	ISSUED FOR INFORMATION	IFI

DRAWING TITLE

6TH OF OCTOBER MONORAIL
SERVICE WALKWAYS
ZONE (1008)
Z8-FR039

Project Code	Rubric	Initiator	Lot	Ref	Number	Revision
93M	047	ACC	600	DEP	DWG	085	26	B

Tekla structures

approval is subject to approval of coordination package between multi-discipline

REVIEWED WITH COMMENT MONORAILS PROJECT

All holes are 22mm U.N.O Length & Area & Weight per piece						
Z8-FR038	UPN160	S235JR	1	2368.0	1.30	44.6
Mark	Profile	Grade	QTY	Length	Area	Weight

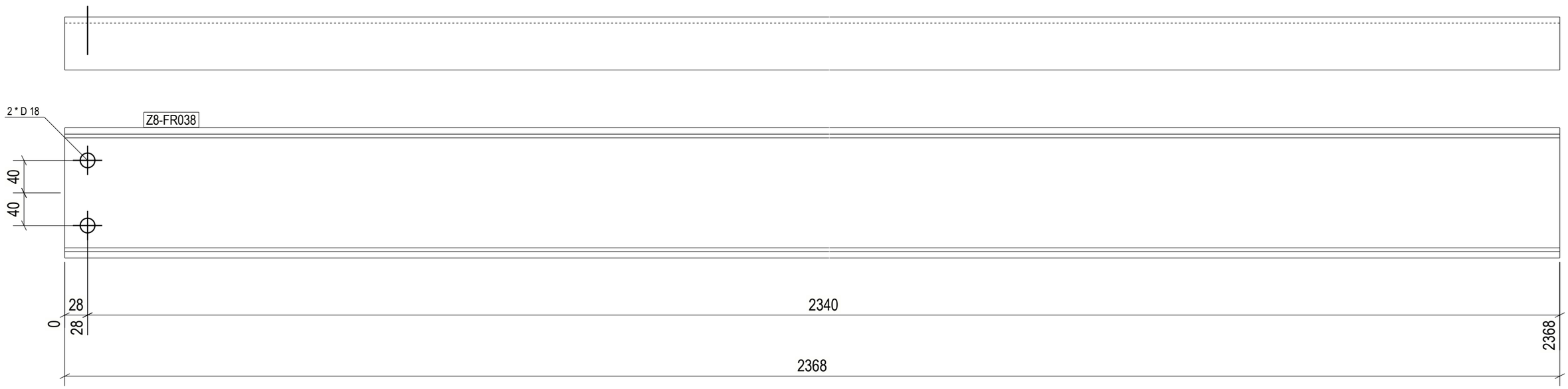

1 REQ'D AS DRAWN MK'D Z8-FR038

6 October Monorail Engineering Unit Valid For Construction

GENERAL NOTES:

1. THE DIMENSIONS SHOWN ARE NOMINAL (IN MILLIMETERS), U.N.O.
2. WELD SIZESHALL BE AISC MINIMUM OF 6 mm UNLESS NOTED OTHERWISE.
3. ALL FIELD WELDS SHALL BE INSPECTED PER QUALITY ASSURANCE AND SPECIAL INSPECTIONS.

REFERENCE DRAWINGS

1	93M-BOA-NAT-LOT-04833
2	93M-BOA-NAT-LOT-09170
3	93M-BOA-NAT-LOT-01976
4	93M-BOA-NAT-LOT-20021
5	
6	
7	
8	
9	

6TH OF OCTOBER CITY RAIL TRANSIT MONORAIL

The Authority | Hill International Consultant | ORASCOM BOMBARDIER Main Contractor | INNOVA Structural Designer

KEY PLAN:

SCALE	SHOP DRAWING	DATE
AS SHOWN		12/05/2023

REV	DATE	DSG	CHK	APP	AMENDMENTS	STATUS
B	12/05/2023	M.KH	M.KH	DR.M.M	ISSUED FOR INFORMATION	IFI

DRAWING TITLE

6TH OF OCTOBER MONORAIL SERVICE WALKWAYS ZONE (1008)
Z8-FR038

Project Code	Rubric	Initiator	Lot	Ref	Number	Revision
93M	0476	ACC	60DEP	DWG	08527	B

Tekla structures

approval is subject to approval of coordination package between multi-discipline

REVIEWED WITH COMMENT
MONORAILS PROJECT

All holes are 22mm U.N.O Length & Area & Weight per piece

Mark	Profile	Grade	QTY	Length	Area	Weight
Z8-FR037	L70*7	S235JR	1	1164.9	0.33	8.5

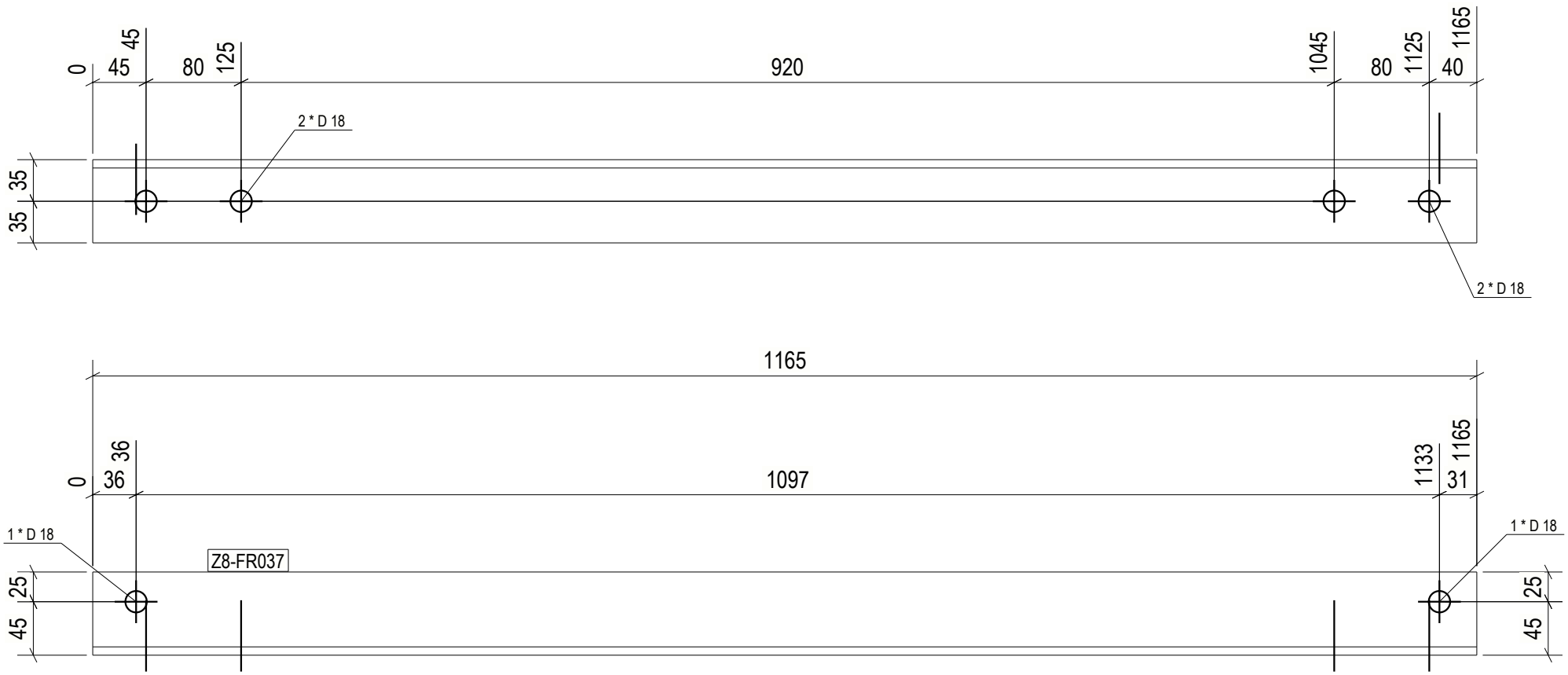

1 REQ'D AS DRAWN MK'D Z8-FR037

6 October Monorail
Engineering Unit
Valid For Construction

GENERAL NOTES:

1. THE DIMENSIONS SHOWN ARE NOMINAL (IN MILLIMETERS), U.N.O.
2. WELD SIZESHALL BE AISC MINIMUM OF 6 mm UNLESS NOTED OTHERWISE.
3. ALL FIELD WELDS SHALL BE INSPECTED PER QUALITY ASSURANCE AND SPECIAL INSPECTIONS.

REFERENCE DRAWINGS

1	93M-BOA-NAT-LOT-04833
2	93M-BOA-NAT-LOT-09170
3	93M-BOA-NAT-LOT-01976
4	93M-BOA-NAT-LOT-20021
5	
6	
7	
8	
9	

6TH OF OCTOBER CITY RAIL TRANSIT MONORAIL

The Authority — Hill International Consultant — Main Contractor — Structural Designer

KEY PLAN:

REV.	DATE	DSG	CHK	APP	AMENDMENTS	STATUS
B	12/05/2023	M.KH	M.KH	DR.BM	ISSUED FOR INFORMATION	IFI
A	11/20/2022	M.KH	M.KH	DR.BM	ISSUED FOR INFORMATION	IFI

SCALE: AS SHOWN | SHOPDRAWING | DATE: 12/05/2023

DRAWING TITLE
6TH OF OCTOBER MONORAIL
SERVICE WALKWAYS
ZONE (1008)
Z8-FR037

Project Code	Rubric	Initiator	Lot	Ref	Number	Revision
9 3	M 0 4 7 6	A C C	6 0 D	E P	D W G	0 8 5 2 8	B

Tekla structures

All holes are 22mm U.N.O Length & Area & Weight per piece

Mark	Profile	Grade	QTY	Length	Area	Weight
Z8-FR036	UPN160	S235JR	1	592.0	0.33	11.2

approval is subject to approval of coordination package between multi-discipline

REVIEWED WITH COMMENT
MONORAILS PROJECT

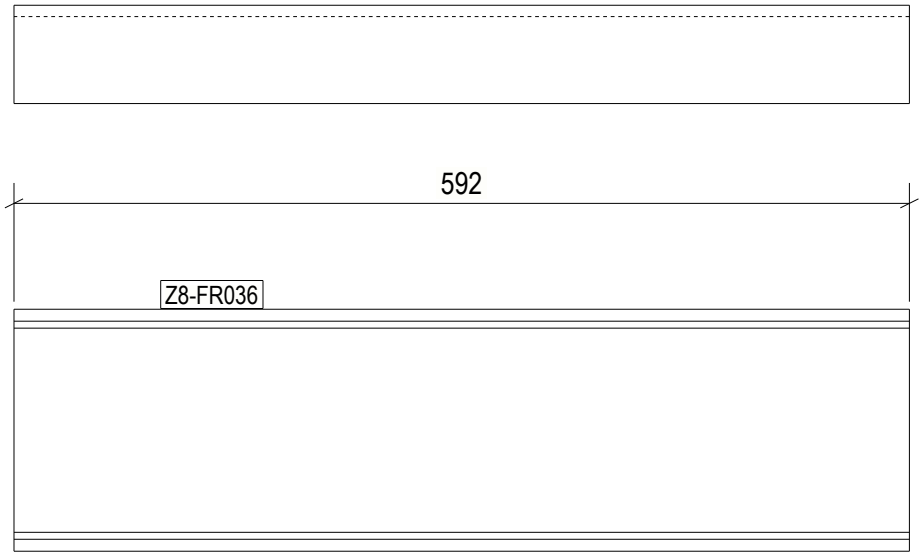

1 REQ'D AS DRAWN MK'D Z8-FR036

6 October Monorail
Engineering Unit
Valid For Construction

GENERAL NOTES:

1. THE DIMENSIONS SHOWN ARE NOMINAL (IN MILLIMETERS), U.N.O.
2. WELD SIZESHALL BE AISC MINIMUM OF 6 mm UNLESS NOTED OTHERWISE.
3. ALL FIELD WELDS SHALL BE INSPECTED PER QUALITY ASSURANCE AND SPECIAL INSPECTIONS.

REFERENCE DRAWINGS

1	93M-BOA-NAT-LOT-04833
2	93M-BOA-NAT-LOT-09170
3	93M-BOA-NAT-LOT-01976
4	93M-BOA-NAT-LOT-20021
5	
6	
7	
8	
9	

6TH OF OCTOBER CITY RAIL TRANSIT MONORAIL

The Authority | Hill International Consultant | Main Contractor | Structural Designer

KEY PLAN:

REV.	DATE	DSG	CHK	APP	AMENDMENTS	STATUS
B	12/05/2023	M.KH	M.KH	DR.M.M	ISSUED FOR INFORMATION	IFI
A	11/20/2022	M.KH	M.KH	DR.M.M	ISSUED FOR INFORMATION	IFI

SCALE: AS SHOWN | SHOPDRAWING | DATE: 12/05/2023

DRAWING TITLE
6TH OF OCTOBER MONORAIL
SERVICE WALKWAYS
ZONE (1008)
Z8-FR036

Project Code	Rubric	Initiator	Lot	Ref	Number	Revision
9 3 M	0 4 7 6	A C C	6 0 D E	P D W	G 0 8 5 2 9	B

Tekla structures

approval is subject to approval of coordination package between multi-discipline

REVIEWED WITH COMMENT
MONORAILS PROJECT

All holes are 22mm U.N.O Length & Area & Weight per piece

Mark	Profile	Grade	QTY	Length	Area	Weight
Z8-FR035	UPN160	S235JR	1	592.0	0.33	11.2

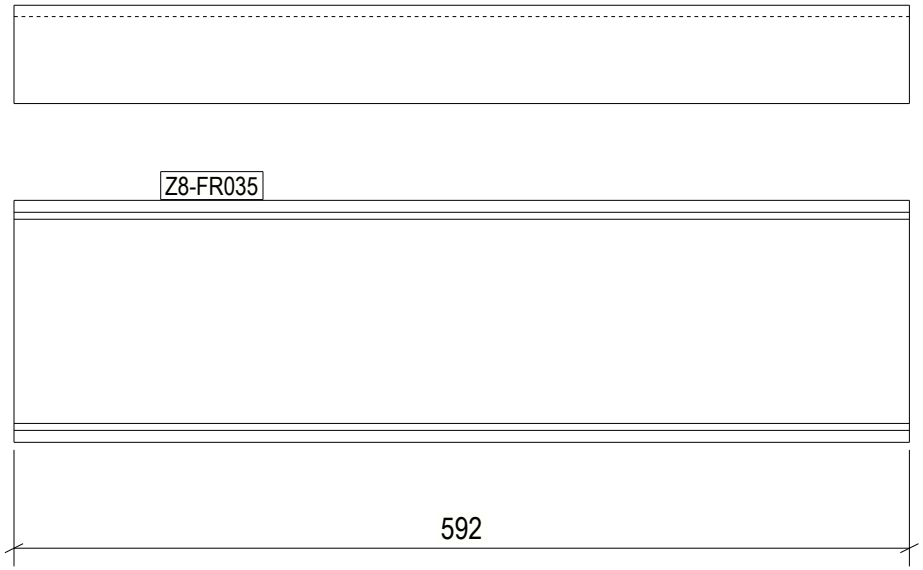

1 REQ'D AS DRAWN MK'D Z8-FR035

6 October Monorail
Engineering Unit
Valid For Construction

GENERAL NOTES:

1. THE DIMENSIONS SHOWN ARE NOMINAL (IN MILLIMETERS), U.N.O.
2. WELD SIZESHALL BE AISC MINIMUM OF 6 mm UNLESS NOTED OTHERWISE.
3. ALL FIELD WELDS SHALL BE INSPECTED PER QUALITY ASSURANCE AND SPECIAL INSPECTIONS.

REFERENCE DRAWINGS

1	93M-BOA-NAT-LOT-04833
2	93M-BOA-NAT-LOT-09170
3	93M-BOA-NAT-LOT-01976
4	93M-BOA-NAT-LOT-20021
5	
6	
7	
8	
9	

6TH OF OCTOBER CITY RAIL TRANSIT MONORAIL

The Authority — Hill International Consultant — Main Contractor — Structural Designer

KEY PLAN:

REV	DATE	DSG	CHK	APP	AMENDMENTS	STATUS
B	12/05/2023	M.KH	M.KH	DR.M.M	ISSUED FOR INFORMATION	IFI
A	11/20/2022	M.KH	M.KH	DR.M.M	ISSUED FOR INFORMATION	IFI

SCALE: AS SHOWN | SHOPDRAWING | DATE: 12/05/2023

DRAWING TITLE
6TH OF OCTOBER MONORAIL
SERVICE WALKWAYS
ZONE (1008)
Z8-FR035

Project Code	Rubric	Initiator	Lot	Ref	Number	Revision
9 3 M	0 4 7 6	A C C	6 0 D E P	D W G	0 8 5 3 0	B

Tekla structures

approval is subject to approval of coordination package between multi-discipline

REVIEWED WITH COMMENT
MONORAILS PROJECT

All holes are 22mm U.N.O Length & Area & Weight per piece

Mark	Profile	Grade	QTY	Length	Area	Weight
Z8-FR034	UPN160	S235JR	1	591.0	0.33	11.1

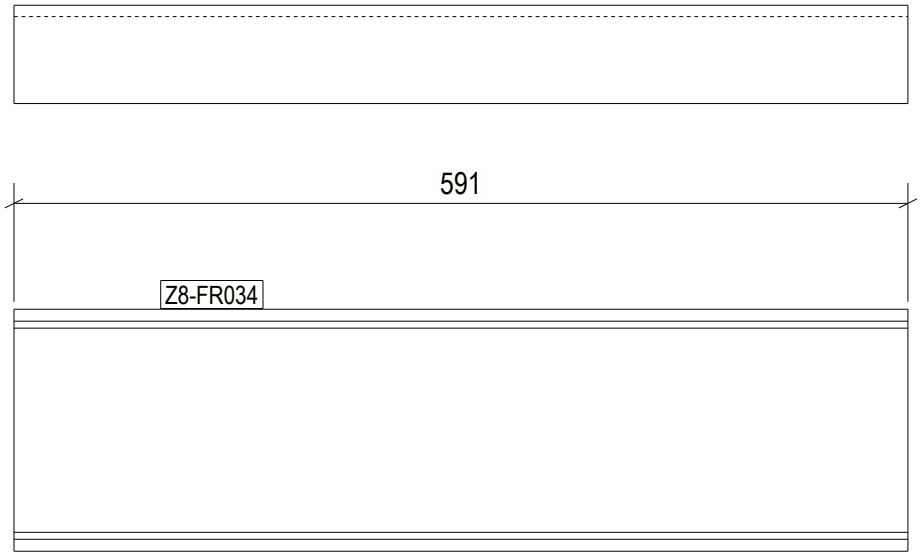

1 REQ'D AS DRAWN MK'D Z8-FR034

6 October Monorail
Engineering Unit
Valid For Construction

GENERAL NOTES:

1. THE DIMENSIONS SHOWN ARE NOMINAL (IN MILLIMETERS), U.N.O.
2. WELD SIZESHALL BE AISC MINIMUM OF 6 mm UNLESS NOTED OTHERWISE.
3. ALL FIELD WELDS SHALL BE INSPECTED PER QUALITY ASSURANCE AND SPECIAL INSPECTIONS.

REFERENCE DRAWINGS

1	93M-BOA-NAT-LOT-04833
2	93M-BOA-NAT-LOT-09170
3	93M-BOA-NAT-LOT-01976
4	93M-BOA-NAT-LOT-20021
5	
6	
7	
8	
9	

6TH OF OCTOBER CITY RAIL TRANSIT MONORAIL

The Authority — Hill International Consultant — Main Contractor — Structural Designer

KEY PLAN:

REV.	DATE	DSG	CHK	APP	AMENDMENTS	STATUS
B	12/05/2023	M.KH	M.KH	DR.M.M	ISSUED FOR INFORMATION	IFI
A	11/20/2022	M.KH	M.KH	DR.M.M	ISSUED FOR INFORMATION	IFI

SCALE: AS SHOWN | SHOPDRAWING | DATE: 12/05/2023

DRAWING TITLE
6TH OF OCTOBER MONORAIL
SERVICE WALKWAYS
ZONE (1008)
Z8-FR034

Project Code	Rubric	Initiator	Lot	Ref	Number	Revision
9 3 M	0 4 7 6	A C C	6 0	D E P	D W G	0 8 5 3 1	B

Tekla structures

approval is subject to approval of coordination package between multi-discipline

REVIEWED WITH COMMENT
MONORAILS PROJECT

All holes are 22mm U.N.O Length & Area & Weight per piece

Mark	Profile	Grade	QTY	Length	Area	Weight
Z8-FR033	UPN160	S235JR	1	2268.0	1.25	42.7

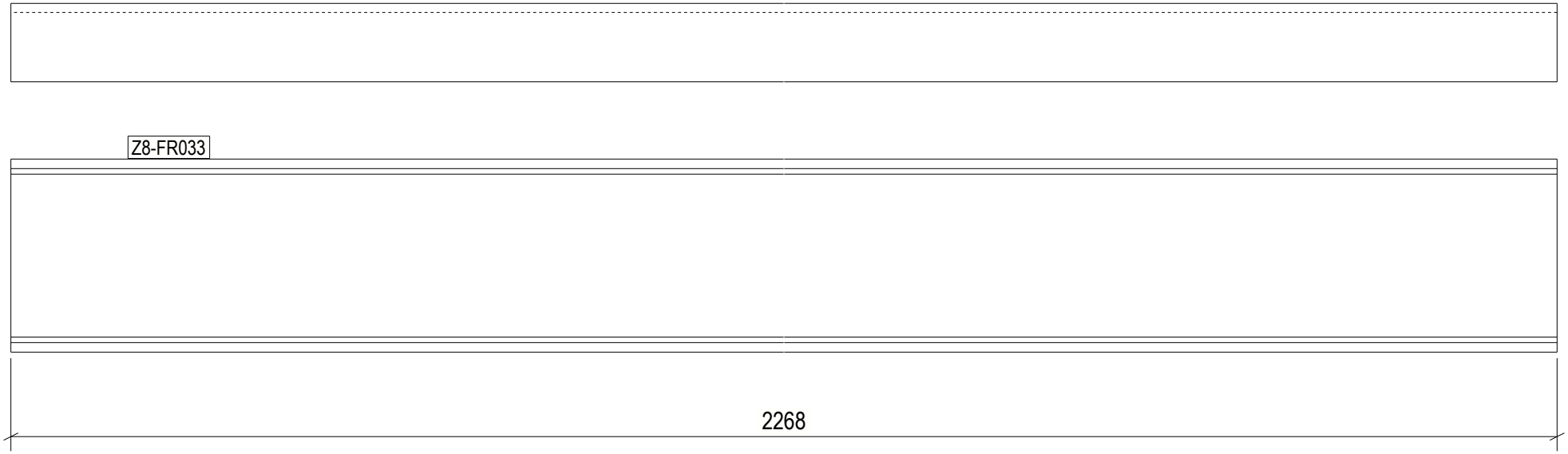

1 REQ'D AS DRAWN MK'D Z8-FR033

6 October Monorail
Engineering Unit
Valid For Construction

GENERAL NOTES:

1. THE DIMENSIONS SHOWN ARE NOMINAL (IN MILLIMETERS), U.N.O.
2. WELD SIZESHALL BE AISC MINIMUM OF 6 mm UNLESS NOTED OTHERWISE.
3. ALL FIELD WELDS SHALL BE INSPECTED PER QUALITY ASSURANCE AND SPECIAL INSPECTIONS.

REFERENCE DRAWINGS

1	93M-BOA-NAT-LOT-04833
2	93M-BOA-NAT-LOT-09170
3	93M-BOA-NAT-LOT-01976
4	93M-BOA-NAT-LOT-20021
5	
6	
7	
8	
9	

6TH OF OCTOBER CITY RAIL TRANSIT MONORAIL

The Authority — Hill International Consultant — Main Contractor — Structural Designer

KEY PLAN:

SCALE	SHOPDRAWING	DATE
AS SHOWN		12/09/2023

REV	DATE	DSG	CHK	APP	AMENDMENTS	STATUS
B	12/05/2023	M.KH	M.KH	DR.M.M	ISSUED FOR INFORMATION	IFI
A	11/20/2022	M.KH	M.KH	DR.M.M	ISSUED FOR INFORMATION	IFI

DRAWING TITLE

6TH OF OCTOBER MONORAIL
SERVICE WALKWAYS
ZONE (1008)
Z8-FR033

Project Code	Rubric	Initiator	Lot	Ref	Number	Revision
93M	047	ACC	60	DEP	DWG	08532	B

Tekla structures

All holes are 22mm U.N.O Length & Area & Weight per piece

Mark	Profile	Grade	QTY	Length	Area	Weight
Z8-FR032	UPN160	S235JR	1	2268.0	1.25	42.7

approval is subject to approval of coordination package between multi-discipline

REVIEWED WITH COMMENT
MONORAILS PROJECT

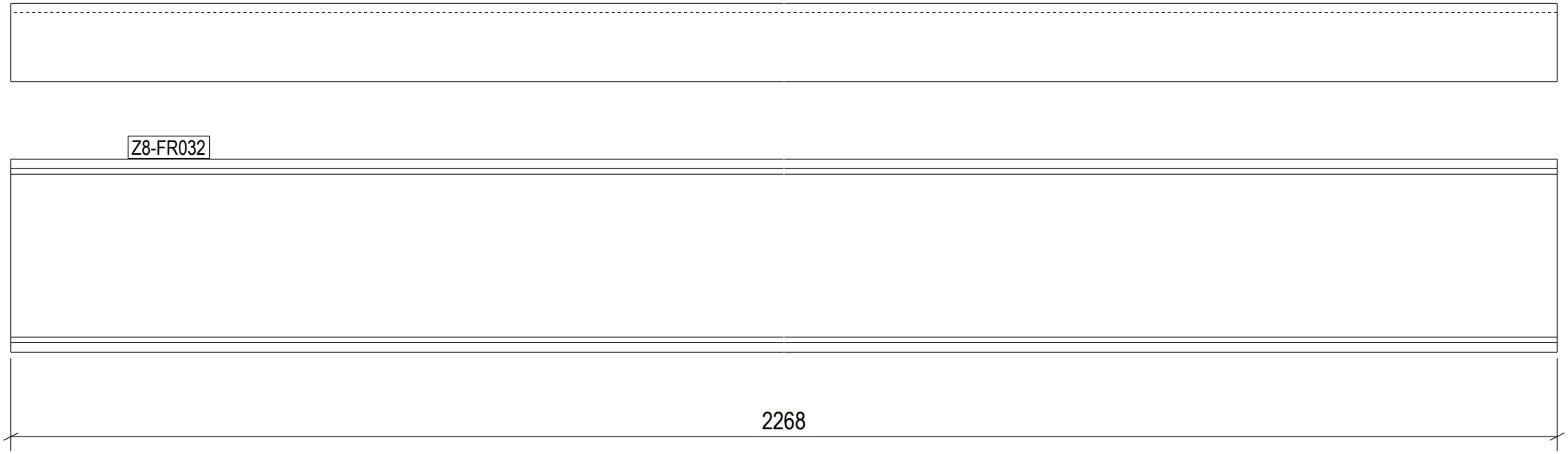

1 REQ'D AS DRAWN MK'D Z8-FR032

6 October Monorail
Engineering Unit
Valid For Construction

GENERAL NOTES:

1. THE DIMENSIONS SHOWN ARE NOMINAL (IN MILLIMETERS), U.N.O.
2. WELD SIZESHALL BE AISC MINIMUM OF 6 mm UNLESS NOTED OTHERWISE.
3. ALL FIELD WELDS SHALL BE INSPECTED PER QUALITY ASSURANCE AND SPECIAL INSPECTIONS.

REFERENCE DRAWINGS

1	93M-BOA-NAT-LOT-04833
2	93M-BOA-NAT-LOT-09170
3	93M-BOA-NAT-LOT-01976
4	93M-BOA-NAT-LOT-20021
5	
6	
7	
8	
9	

6TH OF OCTOBER CITY RAIL TRANSIT MONORAIL

The Authority — Hill International Consultant — Main Contractor — Structural Designer

KEY PLAN:

SCALE: AS SHOWN | SHOPDRAWING | DATE: 12/09/2023

REV.	DATE	DSG	CHK	APP	AMENDMENTS	STATUS
B	12/05/2023	M.KH	M.KH	DR.M.M	ISSUED FOR INFORMATION	IFI
A	11/20/2022	M.KH	M.KH	DR.M.M	ISSUED FOR INFORMATION	IFI

DRAWING TITLE

6TH OF OCTOBER MONORAIL
SERVICE WALKWAYS
ZONE (1008)
Z8-FR032

Project Code	Rubric	Initiator	Lot	Ref	Number	Revision
9 3 M	0 4 7 6	A C C	6 0 D E	P D W	G 0 8 5 3 3	B

Tekla structures

approval is subject to approval of coordination package between multi-discipline

REVIEWED WITH COMMENT
MONORAILS PROJECT

All holes are 22mm U.N.O Length & Area & Weight per piece

Mark	Profile	Grade	QTY	Length	Area	Weight
Z8-FR031	UPN160	S235JR	12	2268.0	1.25	42.7

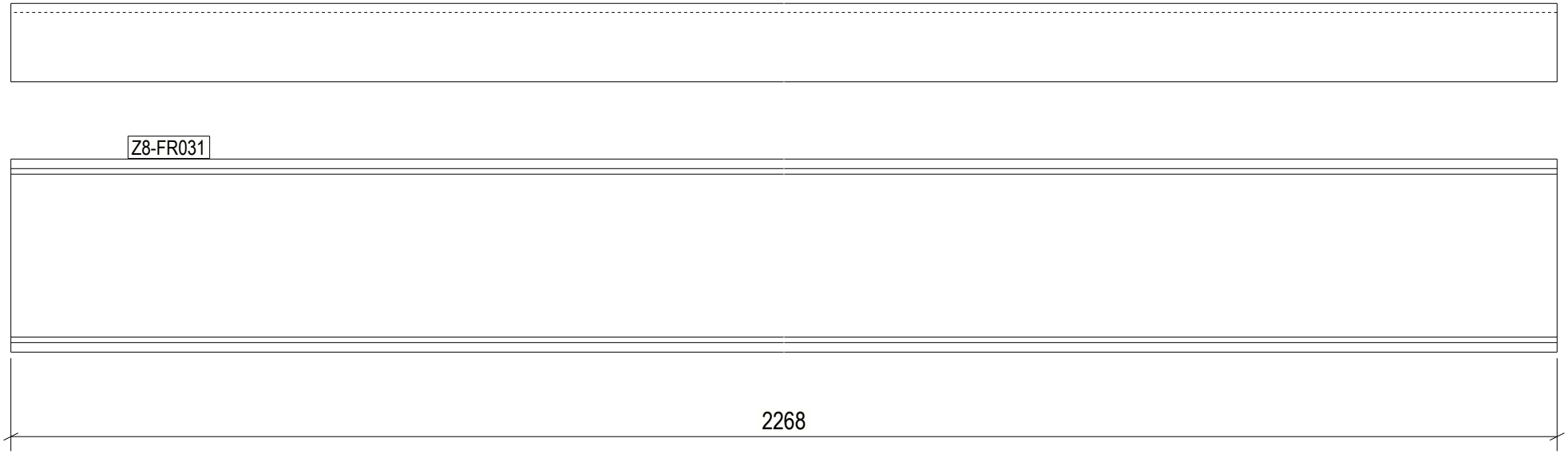

12 REQ'D AS DRAWN MK'D Z8-FR031

6 October Monorail
Engineering Unit
Valid For Construction

GENERAL NOTES:

1. THE DIMENSIONS SHOWN ARE NOMINAL (IN MILLIMETERS), U.N.O.
2. WELD SIZESHALL BE AISC MINIMUM OF 6 mm UNLESS NOTED OTHERWISE.
3. ALL FIELD WELDS SHALL BE INSPECTED PER QUALITY ASSURANCE AND SPECIAL INSPECTIONS.

REFERENCE DRAWINGS

1	93M-BOA-NAT-LOT-04833
2	93M-BOA-NAT-LOT-09170
3	93M-BOA-NAT-LOT-01976
4	93M-BOA-NAT-LOT-20021
5	
6	
7	
8	
9	

6TH OF OCTOBER CITY RAIL TRANSIT MONORAIL

The Authority — Hill International Consultant — Main Contractor — Structural Designer

KEY PLAN:

REV	DATE	DSG	CHK	APP	AMENDMENTS	STATUS
B	12/05/2023	M.KH	M.KH	DR.M.M	ISSUED FOR INFORMATION	IFI
A	11/20/2022	M.KH	M.KH	DR.M.M	ISSUED FOR INFORMATION	IFI

SCALE: AS SHOWN | SHOPDRAWING | DATE: 12/05/2023

DRAWING TITLE
6TH OF OCTOBER MONORAIL
SERVICE WALKWAYS
ZONE (1008)
Z8-FR031

Project Code	Rubric	Initiator	Lot	Ref	Number	Revision
9 3 M	0 4 7 6	A C C	6 0 D E P	D W G	0 8 5 3 4	B

Tekla structures

All holes are 22mm U.N.O Length & Area & Weight per piece

Mark	Profile	Grade	QTY	Length	Area	Weight
Z8-FR030	UPN160	S235JR	1	2268.0	1.25	42.7

approval is subject to approval of coordination package between multi-discipline

REVIEWED WITH COMMENT
MONORAILS PROJECT

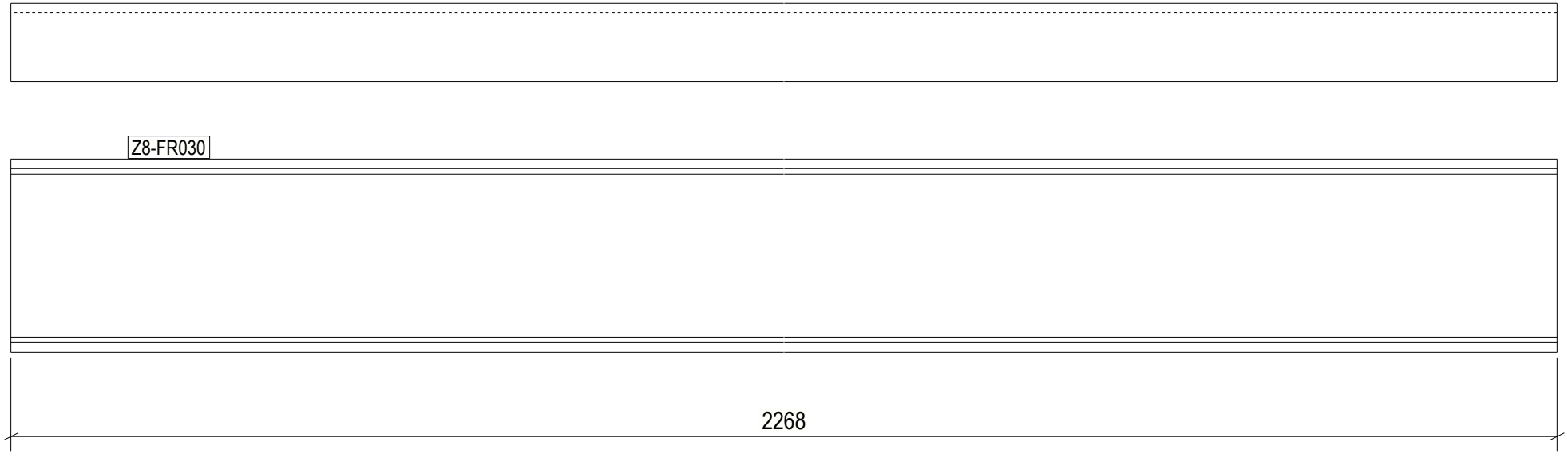

1 REQ'D AS DRAWN MK'D Z8-FR030

6 October Monorail
Engineering Unit
Valid For Construction

GENERAL NOTES:

1. THE DIMENSIONS SHOWN ARE NOMINAL (IN MILLIMETERS), U.N.O.
2. WELD SIZESHALL BE AISC MINIMUM OF 6 mm UNLESS NOTED OTHERWISE.
3. ALL FIELD WELDS SHALL BE INSPECTED PER QUALITY ASSURANCE AND SPECIAL INSPECTIONS.

REFERENCE DRAWINGS

1	93M-BOA-NAT-LOT-04833
2	93M-BOA-NAT-LOT-09170
3	93M-BOA-NAT-LOT-01976
4	93M-BOA-NAT-LOT-20021
5	
6	
7	
8	
9	

6TH OF OCTOBER CITY RAIL TRANSIT MONORAIL

The Authority — Hill International Consultant — Main Contractor — Structural Designer

KEY PLAN:

SCALE	SHOPDRAWING	DATE
AS SHOWN		12/09/2023

REV.	DATE	DSG	CHK	APP	AMENDMENTS	STATUS
B	12/05/2023	M.KH	M.KH	DR.M.M	ISSUED FOR INFORMATION	IFI
A	11/20/2022	M.KH	M.KH	DR.M.M	ISSUED FOR INFORMATION	IFI

DRAWING TITLE

6TH OF OCTOBER MONORAIL
SERVICE WALKWAYS
ZONE (1008)
Z8-FR030

Project Code	Rubric	Initiator	Lot	Ref	Number	Revision
93M	047	ACC	60DEP	DWG	08535	B

Tekla structures

approval is subject to approval of coordination package between multi-discipline

REVIEWED WITH COMMENT
MONORAILS PROJECT

All holes are 22mm U.N.O Length & Area & Weight per piece

Mark	Profile	Grade	QTY	Length	Area	Weight
Z8-FR029	UPN160	S235JR	1	2268.0	1.25	42.7

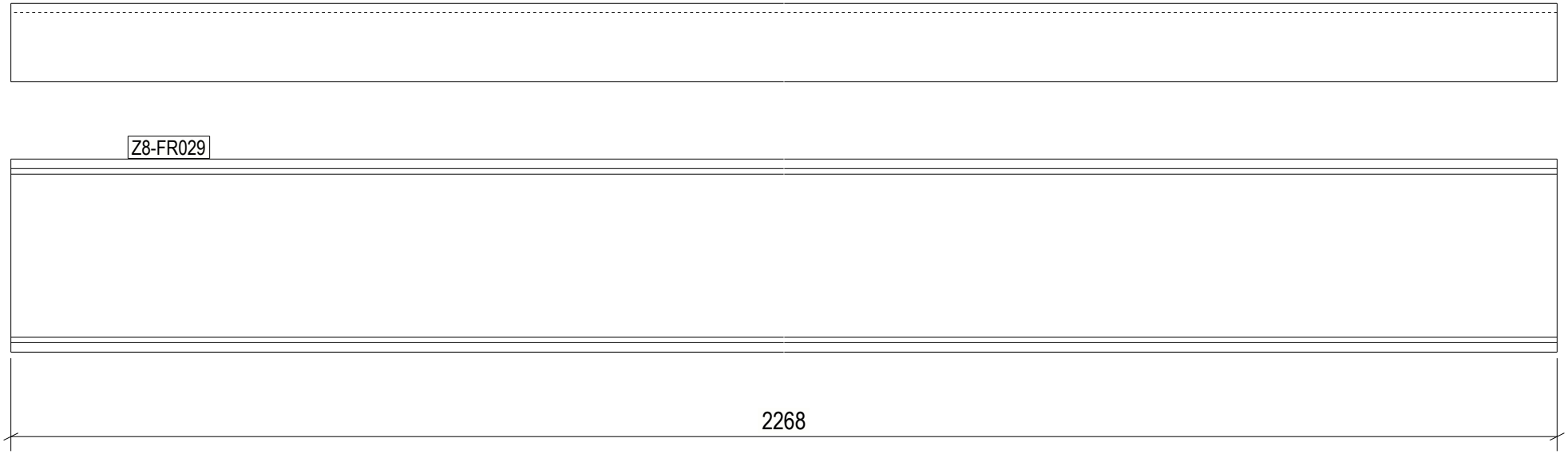

1 REQ'D AS DRAWN MK'D Z8-FR029

6 October Monorail
Engineering Unit
Valid For Construction

GENERAL NOTES:

1. THE DIMENSIONS SHOWN ARE NOMINAL (IN MILLIMETERS), U.N.O.
2. WELD SIZESHALL BE AISC MINIMUM OF 6 mm UNLESS NOTED OTHERWISE.
3. ALL FIELD WELDS SHALL BE INSPECTED PER QUALITY ASSURANCE AND SPECIAL INSPECTIONS.

REFERENCE DRAWINGS

1	93M-BOA-NAT-LOT-04833
2	93M-BOA-NAT-LOT-09170
3	93M-BOA-NAT-LOT-01976
4	93M-BOA-NAT-LOT-20021
5	
6	
7	
8	
9	

6TH OF OCTOBER CITY RAIL TRANSIT MONORAIL

The Authority — Hill International Consultant — Main Contractor — Structural Designer

KEY PLAN:

REV.	DATE	DSG	CHK	APP	AMENDMENTS	STATUS
B	12/05/2023	M.KH	M.KH	DR.BUM	ISSUED FOR INFORMATION	IFI
A	11/20/2022	M.KH	M.KH	DR.BUM	ISSUED FOR INFORMATION	IFI

SCALE: AS SHOWN | SHOPDRAWING | DATE: 12/05/2023

DRAWING TITLE
6TH OF OCTOBER MONORAIL
SERVICE WALKWAYS
ZONE (1008)
Z8-FR029

Project Code	Rubric	Initiator	Lot	Ref	Number	Revision
93M	047	ACC	60	DEP	DWG	08536	B

Tekla structures

All holes are 22mm U.N.O Length & Area & Weight per piece

Mark	Profile	Grade	QTY	Length	Area	Weight
Z8-FR028	UPN160	S235JR	10	2268.0	1.25	42.7

approval is subject to approval of coordination package between multi-discipline

REVIEWED WITH COMMENT
MONORAILS PROJECT

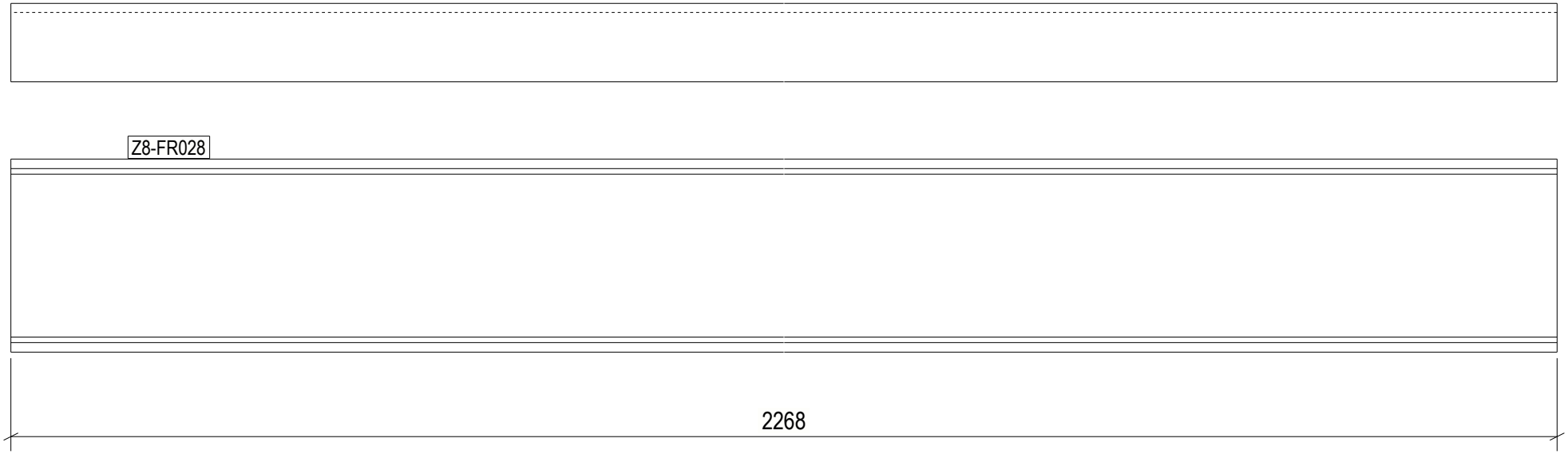

10 REQ'D AS DRAWN MK'D Z8-FR028

6 October Monorail
Engineering Unit
Valid For Construction

GENERAL NOTES:

1. THE DIMENSIONS SHOWN ARE NOMINAL (IN MILLIMETERS), U.N.O.
2. WELD SIZESHALL BE AISC MINIMUM OF 6 mm UNLESS NOTED OTHERWISE.
3. ALL FIELD WELDS SHALL BE INSPECTED PER QUALITY ASSURANCE AND SPECIAL INSPECTIONS.

REFERENCE DRAWINGS

1	93M-BOA-NAT-LOT-04833
2	93M-BOA-NAT-LOT-09170
3	93M-BOA-NAT-LOT-01976
4	93M-BOA-NAT-LOT-20021
5	
6	
7	
8	
9	

6TH OF OCTOBER CITY RAIL TRANSIT MONORAIL

The Authority — Hill International Consultant — Main Contractor — Structural Designer

KEY PLAN:

SCALE	SHOPDRAWING	DATE
AS SHOWN		12/09/2023

REV	DATE	DSG	CHK	APP	AMENDMENTS	STATUS
B	12/05/2023	M.KH	M.KH	DR.M.M	ISSUED FOR INFORMATION	IFI
A	11/20/2022	M.KH	M.KH	DR.M.M	ISSUED FOR INFORMATION	IFI

DRAWING TITLE

6TH OF OCTOBER MONORAIL
SERVICE WALKWAYS
ZONE (1008)
Z8-FR028

Project Code	Rubric	Initiator	Lot	Ref	Number	Revision
9 3 M	0 4 7 6	A C C	6 0 D E P	D W G	0 8 5 3 7	B

Tekla structures

approval is subject to approval of coordination package between multi-discipline

REVIEWED WITH COMMENT MONORAILS PROJECT

All holes are 22mm U.N.O Length & Area & Weight per piece

Mark	Profile	Grade	QTY	Length	Area	Weight
Z8-FR027	UPN160	S235JR	1	2268.0	1.25	42.7

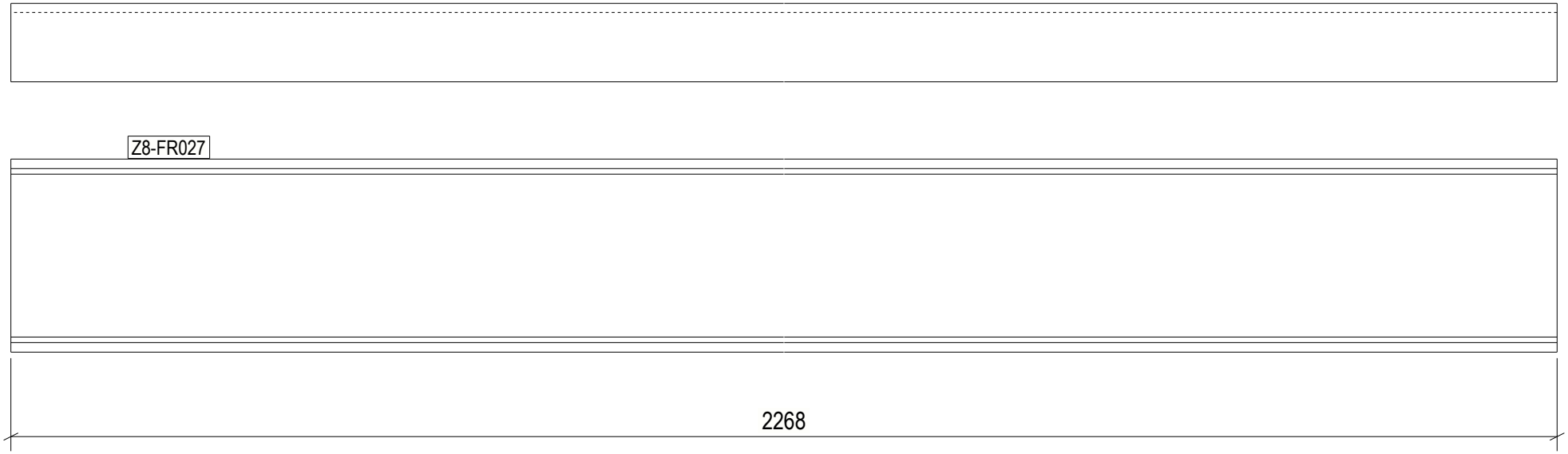

1 REQ'D AS DRAWN MK'D Z8-FR027

6 October Monorail Engineering Unit Valid For Construction

GENERAL NOTES:

1. THE DIMENSIONS SHOWN ARE NOMINAL (IN MILLIMETERS), U.N.O.
2. WELD SIZESHALL BE AISC MINIMUM OF 6 mm UNLESS NOTED OTHERWISE.
3. ALL FIELD WELDS SHALL BE INSPECTED PER QUALITY ASSURANCE AND SPECIAL INSPECTIONS.

REFERENCE DRAWINGS

1	93M-BOA-NAT-LOT-04833
2	93M-BOA-NAT-LOT-09170
3	93M-BOA-NAT-LOT-01976
4	93M-BOA-NAT-LOT-20021
5	
6	
7	
8	
9	

6TH OF OCTOBER CITY RAIL TRANSIT MONORAIL

The Authority — Hill International Consultant — Main Contractor — Structural Designer

KEY PLAN:

SCALE	SHOPDRAWING	DATE
AS SHOWN		12/09/2023

REV.	DATE	DSG	CHK	APP	AMENDMENTS	STATUS
B	12/05/2023	M.KH	M.KH	DR.M.M	ISSUED FOR INFORMATION	IFI
A	11/20/2022	M.KH	M.KH	DR.M.M	ISSUED FOR INFORMATION	IFI

DRAWING TITLE

6TH OF OCTOBER MONORAIL SERVICE WALKWAYS ZONE (1008) Z8-FR027

Project Code	Rubric	Initiator	Lot	Ref	Number	Revision
93	M04	76	ACC	60	DEP	DWG	0853	B

Tekla structures

approval is subject to approval of coordination package between multi-discipline

REVIEWED WITH COMMENT MONORAILS PROJECT

All holes are 22mm U.N.O Length & Area & Weight per piece

Mark	Profile	Grade	QTY	Length	Area	Weight
Z8-FR026	UPN160	S235JR	1	2268.0	1.25	42.7

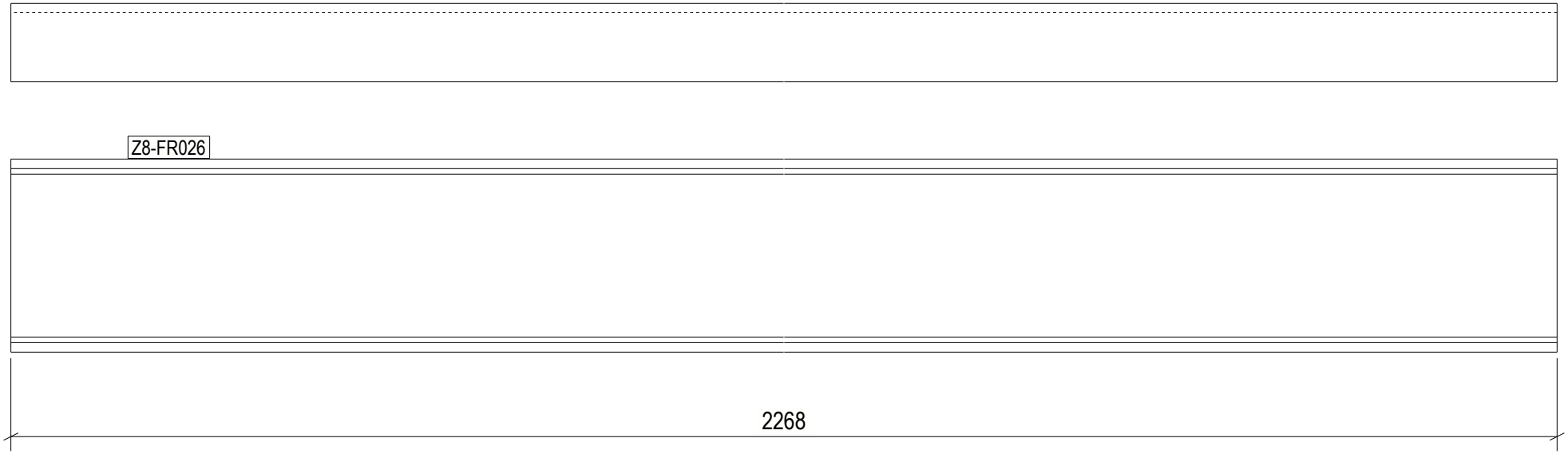

1 REQ'D AS DRAWN MK'D Z8-FR026

6 October Monorail Engineering Unit Valid For Construction

GENERAL NOTES:

1. THE DIMENSIONS SHOWN ARE NOMINAL (IN MILLIMETERS), U.N.O.
2. WELD SIZESHALL BE AISC MINIMUM OF 6 mm UNLESS NOTED OTHERWISE.
3. ALL FIELD WELDS SHALL BE INSPECTED PER QUALITY ASSURANCE AND SPECIAL INSPECTIONS.

REFERENCE DRAWINGS

1	93M-BOA-NAT-LOT-04833
2	93M-BOA-NAT-LOT-09170
3	93M-BOA-NAT-LOT-01976
4	93M-BOA-NAT-LOT-20021
5	
6	
7	
8	
9	

6TH OF OCTOBER CITY RAIL TRANSIT MONORAIL

The Authority — Hill International Consultant — Main Contractor — Structural Designer

KEY PLAN:

SCALE AS SHOWN | SHOPDRAWING | DATE 12/09/2023

REV	DATE	DSG	CHK	APP	AMENDMENTS	STATUS
B	12/05/2023	M.KH	M.KH	DR.M.M	ISSUED FOR INFORMATION	IFI
A	11/20/2022	M.KH	M.KH	DR.M.M	ISSUED FOR INFORMATION	IFI

DRAWING TITLE

6TH OF OCTOBER MONORAIL SERVICE WALKWAYS ZONE (1008) Z8-FR026

Project Code	Rubric	Initiator	Lot	Ref	Number	Revision
93M	047	ACC	60DEP	DWG	08539	B

Tekla structures

approval is subject to approval of coordination package between multi-discipline

REVIEWED WITH COMMENT
MONORAILS PROJECT

All holes are 22mm U.N.O Length & Area & Weight per piece

Mark	Profile	Grade	QTY	Length	Area	Weight
Z8-FR025	UPN160	S235JR	1	2368.0	1.30	44.6

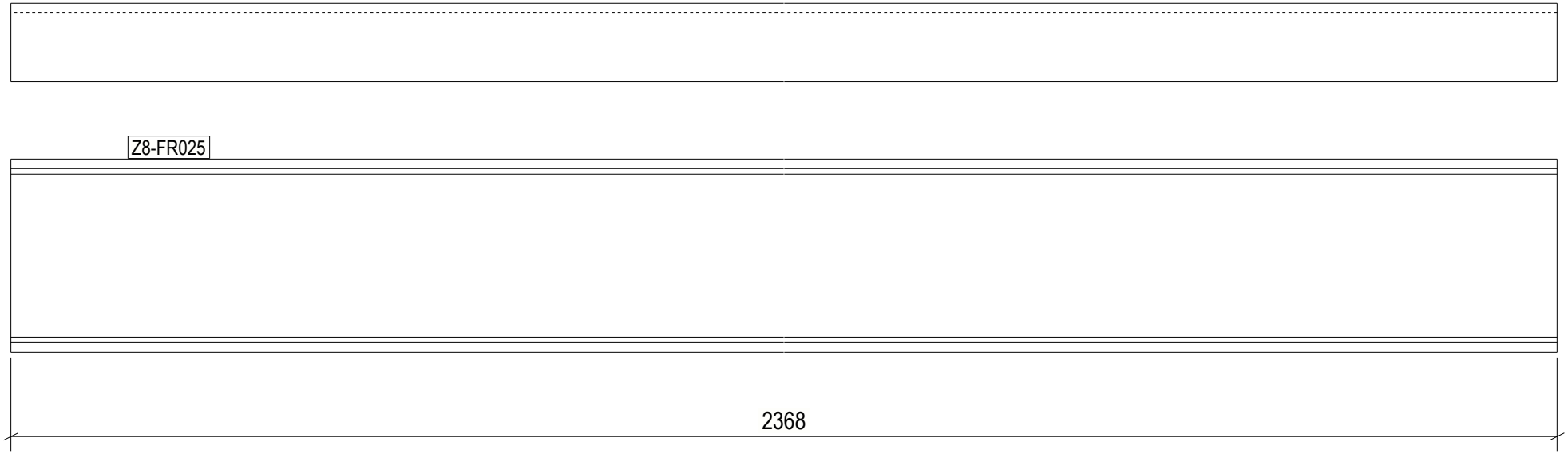

1 REQ'D AS DRAWN MK'D Z8-FR025

6 October Monorail
Engineering Unit
Valid For Construction

GENERAL NOTES:

1. THE DIMENSIONS SHOWN ARE NOMINAL (IN MILLIMETERS), U.N.O.
2. WELD SIZESHALL BE AISC MINIMUM OF 6 mm UNLESS NOTED OTHERWISE.
3. ALL FIELD WELDS SHALL BE INSPECTED PER QUALITY ASSURANCE AND SPECIAL INSPECTIONS.

REFERENCE DRAWINGS

1	93M-BOA-NAT-LOT-04833
2	93M-BOA-NAT-LOT-09170
3	93M-BOA-NAT-LOT-01976
4	93M-BOA-NAT-LOT-20021
5	
6	
7	
8	
9	

6TH OF OCTOBER CITY RAIL TRANSIT MONORAIL

The Authority — Hill International Consultant — Main Contractor — Structural Designer

KEY PLAN:

REV.	DATE	DSG	CHK	APP	AMENDMENTS	STATUS
B	12/05/2023	M.KH	M.KH	DR.M.M	ISSUED FOR INFORMATION	IFI
A	11/20/2022	M.KH	M.KH	DR.M.M	ISSUED FOR INFORMATION	IFI

SCALE: AS SHOWN | SHOPDRAWING | DATE: 12/05/2023

DRAWING TITLE
6TH OF OCTOBER MONORAIL
SERVICE WALKWAYS
ZONE (1008)
Z8-FR025

Project Code	Rubric	Initiator	Lot	Ref	Number	Revision
93M	047	ACC	60DEP	DWG	08540	B

Tekla structures

approval is subject to approval of coordination package between multi-discipline

REVIEWED WITH COMMENT
MONORAILS PROJECT

All holes are 22mm U.N.O Length & Area & Weight per piece

Mark	Profile	Grade	QTY	Length	Area	Weight
Z8-FR023	UPN160	S235JR	1	2368.0	1.30	44.6

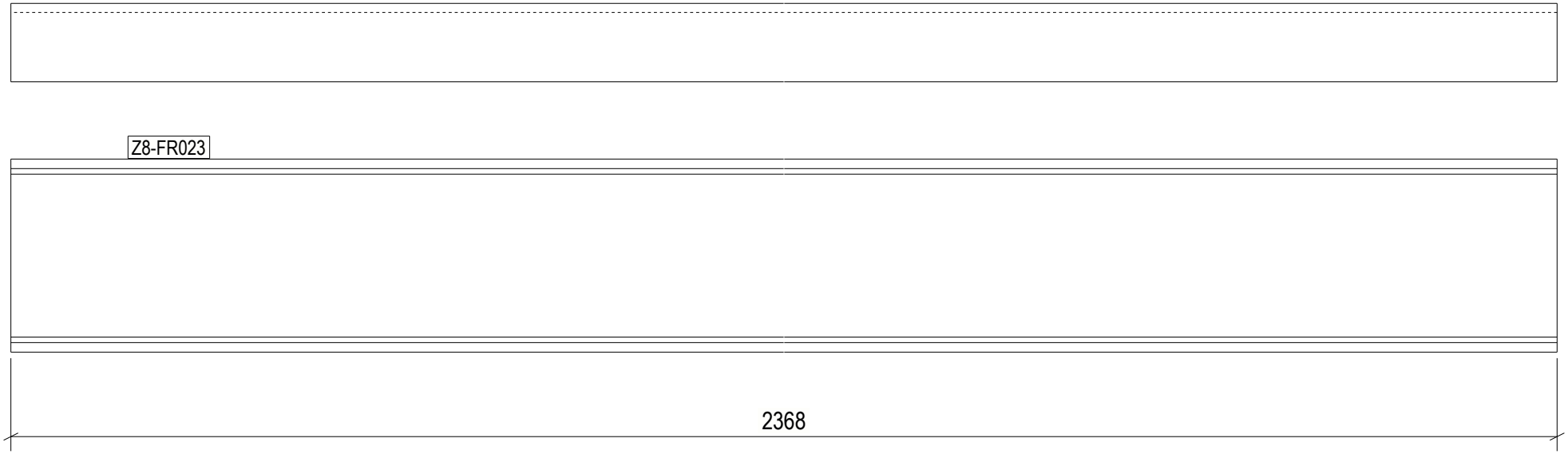

1 REQ'D AS DRAWN MK'D Z8-FR023

6 October Monorail
Engineering Unit
Valid For Construction

GENERAL NOTES:

1. THE DIMENSIONS SHOWN ARE NOMINAL (IN MILLIMETERS), U.N.O.
2. WELD SIZESHALL BE AISC MINIMUM OF 6 mm UNLESS NOTED OTHERWISE.
3. ALL FIELD WELDS SHALL BE INSPECTED PER QUALITY ASSURANCE AND SPECIAL INSPECTIONS.

REFERENCE DRAWINGS

1	93M-BOA-NAT-LOT-04833
2	93M-BOA-NAT-LOT-09170
3	93M-BOA-NAT-LOT-01976
4	93M-BOA-NAT-LOT-20021
5	
6	
7	
8	
9	

6TH OF OCTOBER CITY RAIL TRANSIT MONORAIL

The Authority — Hill International Consultant — Main Contractor — Structural Designer

KEY PLAN:

REV.	DATE	DSG	CHK	APP	AMENDMENTS	STATUS
B	12/05/2023	M.KH	M.KH	DR.M.M	ISSUED FOR INFORMATION	IFI
A	11/20/2022	M.KH	M.KH	DR.M.M	ISSUED FOR INFORMATION	IFI

SCALE: AS SHOWN | SHOPDRAWING | DATE: 12/05/2023

DRAWING TITLE
6TH OF OCTOBER MONORAIL
SERVICE WALKWAYS
ZONE (1008)
Z8-FR023

Project Code	Rubric	Initiator	Lot	Ref	Number	Revision
9 3 M	0 4 7 6	A C C	6 0 D E P	D W G	0 8 5 4 1	B

Tekla structures

approval is subject to approval of coordination package between multi-discipline

REVIEWED WITH COMMENT
MONORAILS PROJECT

All holes are 22mm U.N.O Length & Area & Weight per piece

Mark	Profile	Grade	QTY	Length	Area	Weight
Z8-FR022	UPN160	S235JR	1	2368.0	1.30	44.6

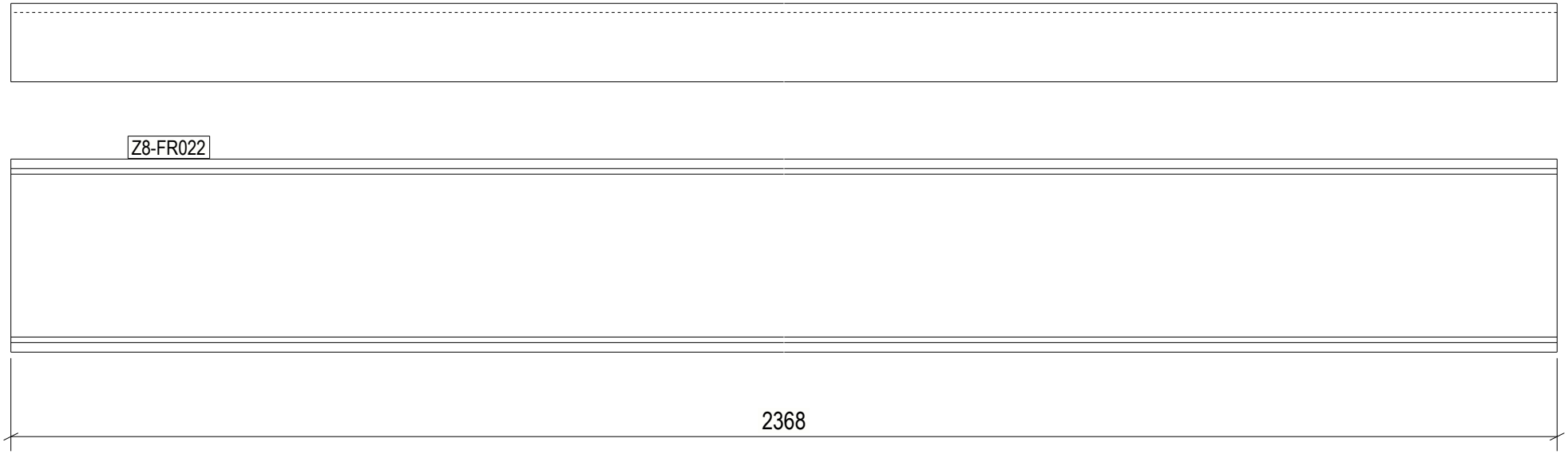

1 REQ'D AS DRAWN MK'D Z8-FR022

6 October Monorail
Engineering Unit
Valid For Construction

GENERAL NOTES:

1. THE DIMENSIONS SHOWN ARE NOMINAL (IN MILLIMETERS), U.N.O.
2. WELD SIZESHALL BE AISC MINIMUM OF 6 mm UNLESS NOTED OTHERWISE.
3. ALL FIELD WELDS SHALL BE INSPECTED PER QUALITY ASSURANCE AND SPECIAL INSPECTIONS.

REFERENCE DRAWINGS

1	93M-BOA-NAT-LOT-04833
2	93M-BOA-NAT-LOT-09170
3	93M-BOA-NAT-LOT-01976
4	93M-BOA-NAT-LOT-20021
5	
6	
7	
8	
9	

6TH OF OCTOBER CITY RAIL TRANSIT MONORAIL

The Authority — Hill International Consultant — Main Contractor — Structural Designer

KEY PLAN:

SCALE	SHOPDRAWING	DATE
AS SHOWN		12/09/2023

REV.	DATE	DSG	CHK	APP	AMENDMENTS	STATUS
B	12/05/2023	M.KH	M.KH	DR.M.M	ISSUED FOR INFORMATION	IFI
A	11/20/2022	M.KH	M.KH	DR.M.M	ISSUED FOR INFORMATION	IFI

DRAWING TITLE

6TH OF OCTOBER MONORAIL
SERVICE WALKWAYS
ZONE (1008)
Z8-FR022

Project Code	Rubric	Initiator	Lot	Ref	Number	Revision
9 3 M	0 4 7 6	A C C	6 0 D E P	D W G	0 8 5 4 2	B

Tekla structures

approval is subject to approval of coordination package between multi-discipline

REVIEWED WITH COMMENT
MONORAILS PROJECT

All holes are 22mm U.N.O Length & Area & Weight per piece

Mark	Profile	Grade	QTY	Length	Area	Weight
Z8-FR021	UPN160	S235JR	1	2368.0	1.30	44.6

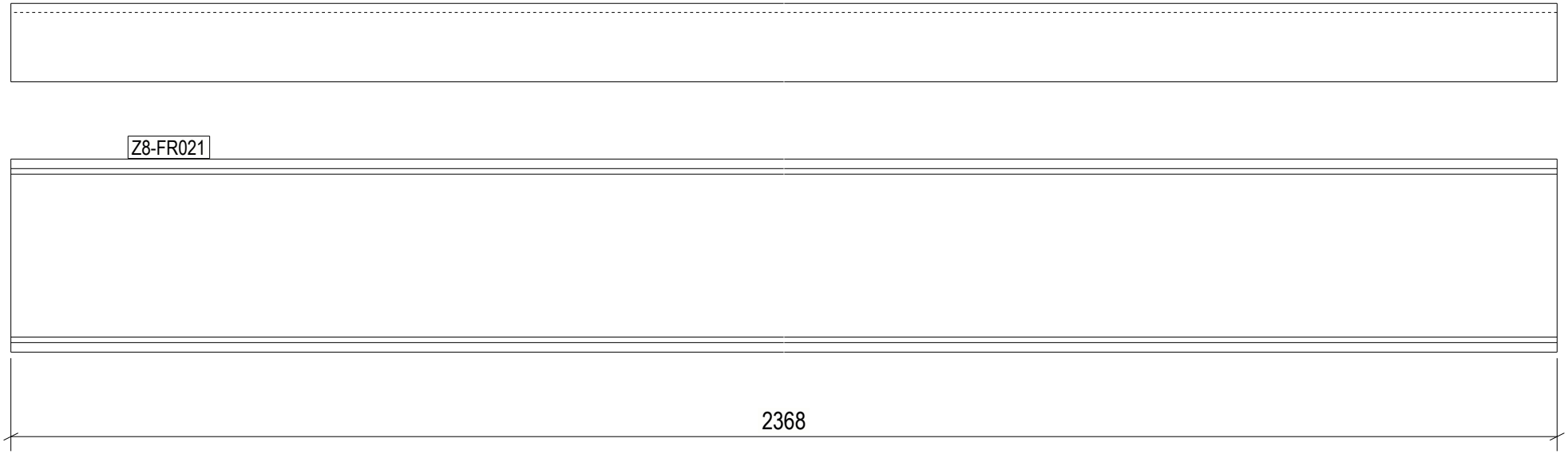

1 REQ'D AS DRAWN MK'D Z8-FR021

6 October Monorail
Engineering Unit
Valid For Construction

GENERAL NOTES:

1. THE DIMENSIONS SHOWN ARE NOMINAL (IN MILLIMETERS), U.N.O.
2. WELD SIZESHALL BE AISC MINIMUM OF 6 mm UNLESS NOTED OTHERWISE.
3. ALL FIELD WELDS SHALL BE INSPECTED PER QUALITY ASSURANCE AND SPECIAL INSPECTIONS.

REFERENCE DRAWINGS

1	93M-BOA-NAT-LOT-04833
2	93M-BOA-NAT-LOT-09170
3	93M-BOA-NAT-LOT-01976
4	93M-BOA-NAT-LOT-20021
5	
6	
7	
8	
9	

6TH OF OCTOBER CITY RAIL TRANSIT MONORAIL

The Authority — Hill International Consultant — Main Contractor — Structural Designer

KEY PLAN:

SCALE	SHOPDRAWING	DATE
AS SHOWN		12/09/2023

REV	DATE	DSG	CHK	APP	AMENDMENTS	STATUS
B	12/05/2023	M.KH	M.KH	DR.M.M	ISSUED FOR INFORMATION	IFI
A	11/20/2022	M.KH	M.KH	DR.M.M	ISSUED FOR INFORMATION	IFI

DRAWING TITLE

6TH OF OCTOBER MONORAIL
SERVICE WALKWAYS
ZONE (1008)
Z8-FR021

Project Code	Rubric	Initiator	Lot	Ref	Number	Revision
9 3 M	0 4 7 6	A C C	6 0 D E P	D W G	0 8 5 4 3	B

Tekla structures

approval is subject to approval of coordination package between multi-discipline

REVIEWED WITH COMMENT
MONORAILS PROJECT

All holes are 22mm U.N.O Length & Area & Weight per piece

Mark	Profile	Grade	QTY	Length	Area	Weight
Z8-FR020	UPN160	S235JR	1	2368.0	1.30	44.6

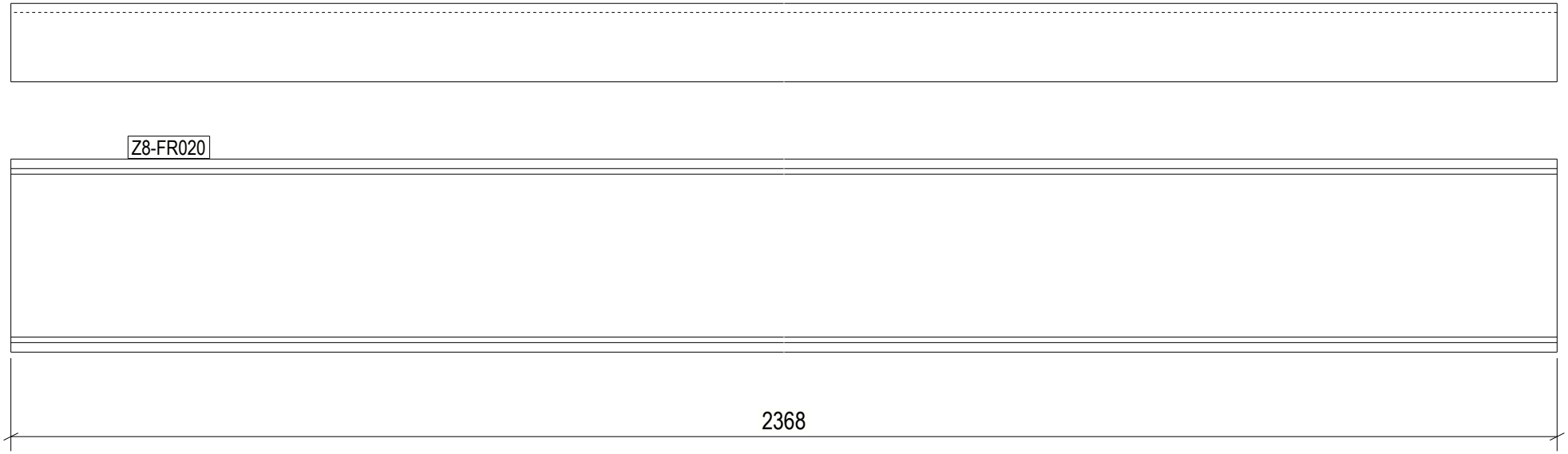

1 REQ'D AS DRAWN MK'D Z8-FR020

6 October Monorail
Engineering Unit
Valid For Construction

GENERAL NOTES:

1. THE DIMENSIONS SHOWN ARE NOMINAL (IN MILLIMETERS), U.N.O.
2. WELD SIZESHALL BE AISC MINIMUM OF 6 mm UNLESS NOTED OTHERWISE.
3. ALL FIELD WELDS SHALL BE INSPECTED PER QUALITY ASSURANCE AND SPECIAL INSPECTIONS.

REFERENCE DRAWINGS

1	93M-BOA-NAT-LOT-04833
2	93M-BOA-NAT-LOT-09170
3	93M-BOA-NAT-LOT-01976
4	93M-BOA-NAT-LOT-20021
5	
6	
7	
8	
9	

6TH OF OCTOBER CITY RAIL TRANSIT MONORAIL

The Authority — Hill International Consultant — Main Contractor — Structural Designer

KEY PLAN:

REV.	DATE	DSG	CHK	APP	AMENDMENTS	STATUS
B	12/05/2023	M.KH	M.KH	DR.M.M	ISSUED FOR INFORMATION	IFI
A	11/20/2022	M.KH	M.KH	DR.M.M	ISSUED FOR INFORMATION	IFI

SCALE: AS SHOWN | SHOPDRAWING | DATE: 12/05/2023

DRAWING TITLE
6TH OF OCTOBER MONORAIL
SERVICE WALKWAYS
ZONE (1008)
Z8-FR020

Project Code	Rubric	Initiator	Lot	Ref	Number	Revision
93M	047	ACC	60	DEP	DWG	08544	B

Tekla structures

approval is subject to approval of coordination package between multi-discipline

REVIEWED WITH COMMENT
MONORAILS PROJECT

All holes are 22mm U.N.O Length & Area & Weight per piece

Mark	Profile	Grade	QTY	Length	Area	Weight
Z8-FR019	UPN160	S235JR	1	2368.0	1.30	44.6

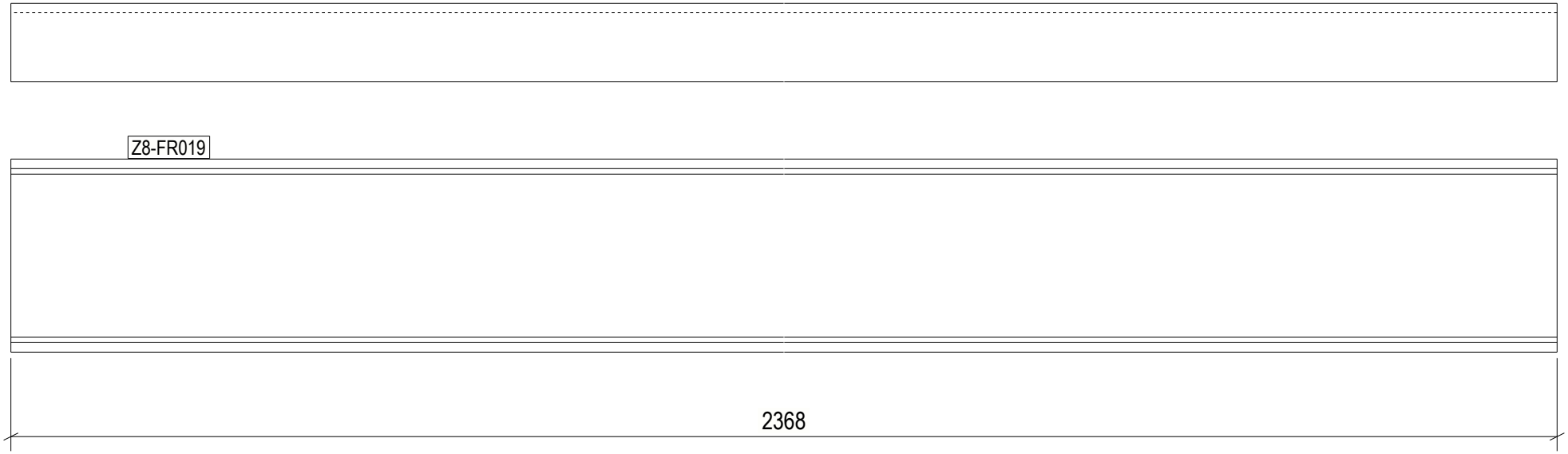

1 REQ'D AS DRAWN MK'D Z8-FR019

6 October Monorail
Engineering Unit
Valid For Construction

GENERAL NOTES:

1. THE DIMENSIONS SHOWN ARE NOMINAL (IN MILLIMETERS), U.N.O.
2. WELD SIZESHALL BE AISC MINIMUM OF 6 mm UNLESS NOTED OTHERWISE.
3. ALL FIELD WELDS SHALL BE INSPECTED PER QUALITY ASSURANCE AND SPECIAL INSPECTIONS.

REFERENCE DRAWINGS

1	93M-BOA-NAT-LOT-04833
2	93M-BOA-NAT-LOT-09170
3	93M-BOA-NAT-LOT-01976
4	93M-BOA-NAT-LOT-20021
5	
6	
7	
8	
9	

6TH OF OCTOBER CITY RAIL TRANSIT MONORAIL

The Authority — Hill International Consultant — Main Contractor — Structural Designer

KEY PLAN:

SCALE	SHOPDRAWING	DATE
AS SHOWN		12/09/2023

REV	DATE	DSG	CHK	APP	AMENDMENTS	STATUS
B	12/05/2023	M.KH	M.KH	DR.M.M	ISSUED FOR INFORMATION	IFI
A	11/20/2022	M.KH	M.KH	DR.M.M	ISSUED FOR INFORMATION	IFI

DRAWING TITLE

6TH OF OCTOBER MONORAIL
SERVICE WALKWAYS
ZONE (1008)
Z8-FR019

Project Code	Rubric	Initiator	Lot	Ref	Number	Revision
93M	047	ACC	60DEP	DWG	08545	B

Tekla structures

approval is subject to approval of coordination package between multi-discipline

REVIEWED WITH COMMENT
MONORAILS PROJECT

All holes are 22mm U.N.O Length & Area & Weight per piece

Mark	Profile	Grade	QTY	Length	Area	Weight
Z8-FR018	UPN160	S235JR	1	2368.0	1.30	44.6

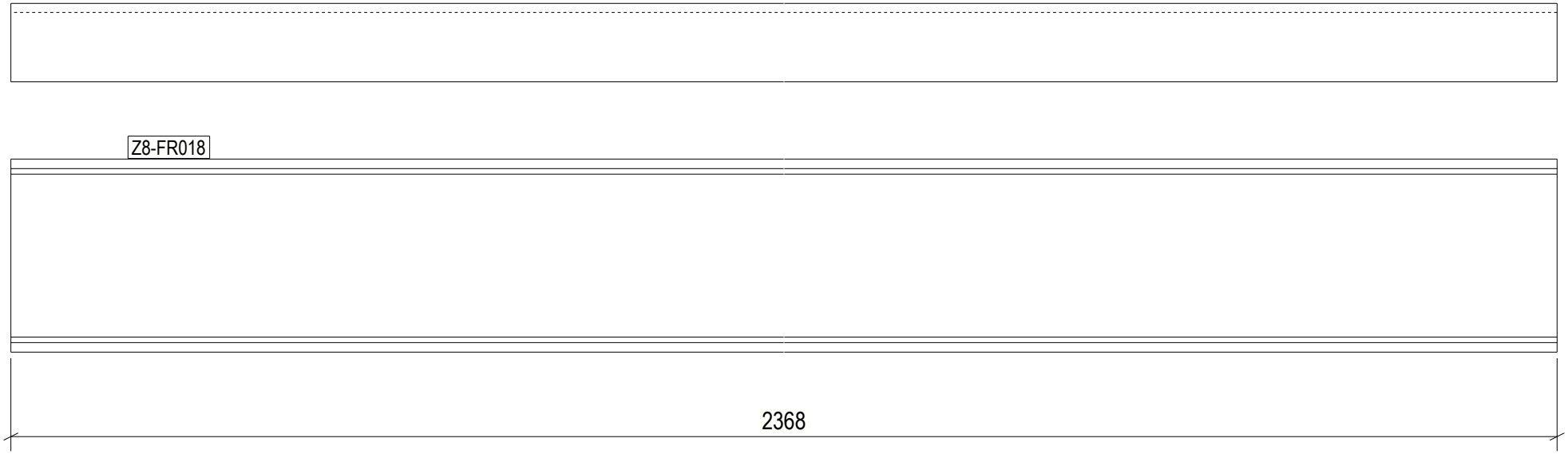

1 REQ'D AS DRAWN MK'D Z8-FR018

6 October Monorail
Engineering Unit
Valid For Construction

GENERAL NOTES:

1. THE DIMENSIONS SHOWN ARE NOMINAL (IN MILLIMETERS), U.N.O.
2. WELD SIZESHALL BE AISC MINIMUM OF 6 mm UNLESS NOTED OTHERWISE.
3. ALL FIELD WELDS SHALL BE INSPECTED PER QUALITY ASSURANCE AND SPECIAL INSPECTIONS.

REFERENCE DRAWINGS

1	93M-BOA-NAT-LOT-04833
2	93M-BOA-NAT-LOT-09170
3	93M-BOA-NAT-LOT-01976
4	93M-BOA-NAT-LOT-20021
5	
6	
7	
8	
9	

6TH OF OCTOBER CITY RAIL TRANSIT MONORAIL

The Authority | Hill International Consultant | Main Contractor | Structural Designer

KEY PLAN:

SCALE	SHOPDRAWING	DATE
AS SHOWN		12/09/2023

REV.	DATE	DSG	CHK	APP	AMENDMENTS	STATUS
B	12/05/2023	M.KH	M.KH	DR.M.M	ISSUED FOR INFORMATION	IFI
A	11/20/2022	M.KH	M.KH	DR.M.M	ISSUED FOR INFORMATION	IFI

DRAWING TITLE

6TH OF OCTOBER MONORAIL
SERVICE WALKWAYS
ZONE (1008)
Z8-FR018

Project Code	Rubric	Initiator	Lot	Ref	Number	Revision
9 3 M	0 4 7 6	A C C	6 0 D E P	D W G	0 8 5 4 6	B

Tekla structures

approval is subject to approval of coordination package between multi-discipline

REVIEWED WITH COMMENT
MONORAILS PROJECT

All holes are 22mm U.N.O Length & Area & Weight per piece

Mark	Profile	Grade	QTY	Length	Area	Weight
Z8-FR017	UPN160	S235JR	1	2368.0	1.30	44.6

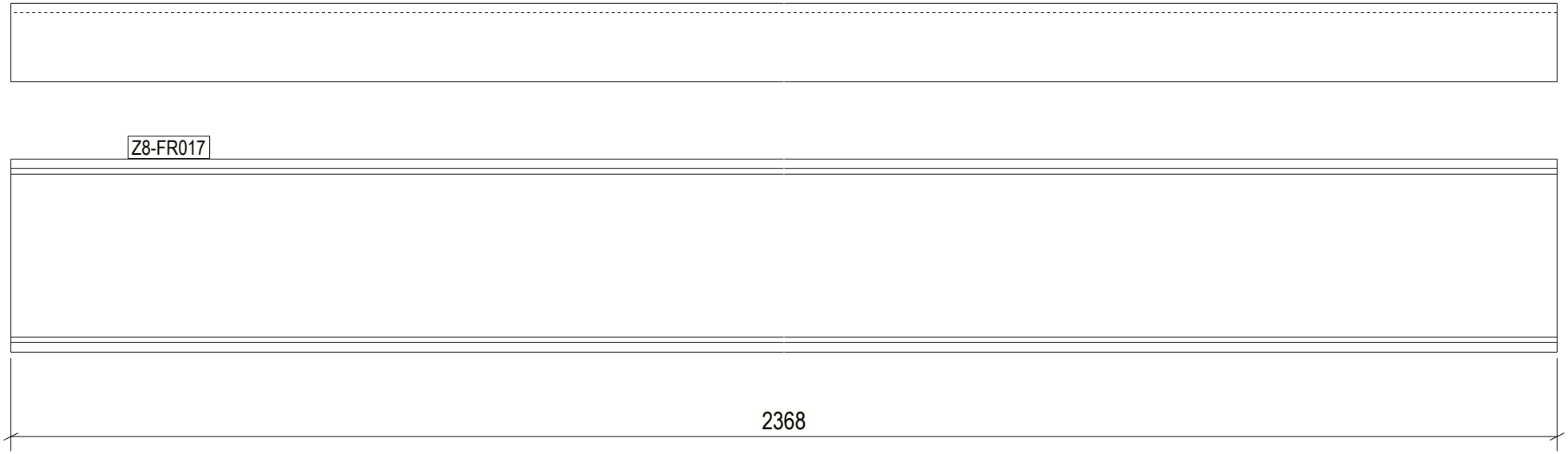

1 REQ'D AS DRAWN MK'D Z8-FR017

6 October Monorail
Engineering Unit
Valid For Construction

GENERAL NOTES:

1. THE DIMENSIONS SHOWN ARE NOMINAL (IN MILLIMETERS), U.N.O.
2. WELD SIZESHALL BE AISC MINIMUM OF 6 mm UNLESS NOTED OTHERWISE.
3. ALL FIELD WELDS SHALL BE INSPECTED PER QUALITY ASSURANCE AND SPECIAL INSPECTIONS.

REFERENCE DRAWINGS

1	93M-BOA-NAT-LOT-04833
2	93M-BOA-NAT-LOT-09170
3	93M-BOA-NAT-LOT-01976
4	93M-BOA-NAT-LOT-20021
5	
6	
7	
8	
9	

6TH OF OCTOBER CITY RAIL TRANSIT MONORAIL

The Authority — Hill International Consultant — Main Contractor — Structural Designer

KEY PLAN:

SCALE	SHOPDRAWING	DATE
AS SHOWN		12/09/2023

REV	DATE	DSG	CHK	APP	AMENDMENTS	STATUS
B	12/05/2023	M.KH	M.KH	DR.M.M	ISSUED FOR INFORMATION	IFI
A	11/20/2022	M.KH	M.KH	DR.M.M	ISSUED FOR INFORMATION	IFI

DRAWING TITLE

6TH OF OCTOBER MONORAIL
SERVICE WALKWAYS
ZONE (1008)
Z8-FR017

Project Code	Rubric	Initiator	Lot	Ref	Number	Revision
9 3 M	0 4 7 6	A C C	6 0 D E P	D W G	0 8 5 4 7	B

Tekla structures

approval is subject to approval of coordination package between multi-discipline

REVIEWED WITH COMMENT
MONORAILS PROJECT

All holes are 22mm U.N.O Length & Area & Weight per piece

Mark	Profile	Grade	QTY	Length	Area	Weight
Z8-FR016	UPN160	S235JR	1	2368.0	1.30	44.6

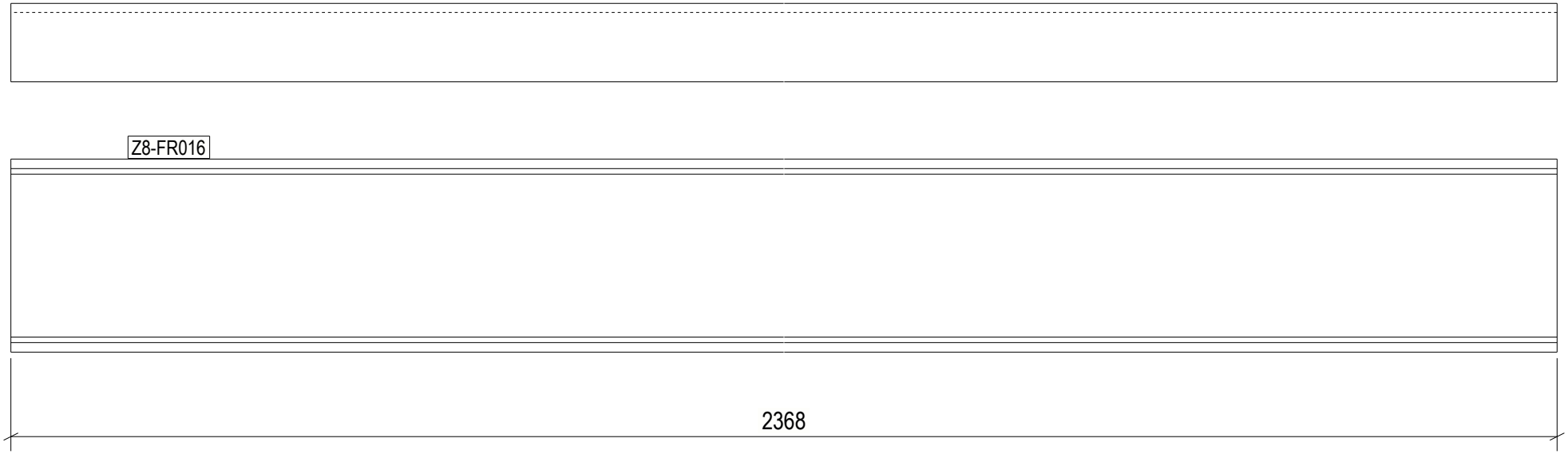

1 REQ'D AS DRAWN MK'D Z8-FR016

6 October Monorail
Engineering Unit
Valid For Construction

GENERAL NOTES:

1. THE DIMENSIONS SHOWN ARE NOMINAL (IN MILLIMETERS), U.N.O.
2. WELD SIZESHALL BE AISC MINIMUM OF 6 mm UNLESS NOTED OTHERWISE.
3. ALL FIELD WELDS SHALL BE INSPECTED PER QUALITY ASSURANCE AND SPECIAL INSPECTIONS.

REFERENCE DRAWINGS

1	93M-BOA-NAT-LOT-04833
2	93M-BOA-NAT-LOT-09170
3	93M-BOA-NAT-LOT-01976
4	93M-BOA-NAT-LOT-20021
5	
6	
7	
8	
9	

6TH OF OCTOBER CITY RAIL TRANSIT MONORAIL

The Authority — Hill International Consultant — Main Contractor — Structural Designer

KEY PLAN:

SCALE	SHOPDRAWING	DATE
AS SHOWN		12/09/2023

REV.	DATE	DSG	CHK	APP	AMENDMENTS	STATUS
B	12/05/2023	M.KH	M.KH	DR.M.M	ISSUED FOR INFORMATION	IFI
A	11/20/2022	M.KH	M.KH	DR.M.M	ISSUED FOR INFORMATION	IFI

DRAWING TITLE

6TH OF OCTOBER MONORAIL
SERVICE WALKWAYS
ZONE (1008)
Z8-FR016

Project Code	Rubric	Initiator	Lot	Ref	Number	Revision
93M	047	ACC	60	DEP	DWG	08548	B

Tekla structures

approval is subject to approval of coordination package between multi-discipline

REVIEWED WITH COMMENT
MONORAILS PROJECT

All holes are 22mm U.N.O Length & Area & Weight per piece

Mark	Profile	Grade	QTY	Length	Area	Weight
Z8-FR015	UPN160	S235JR	1	2368.0	1.30	44.6

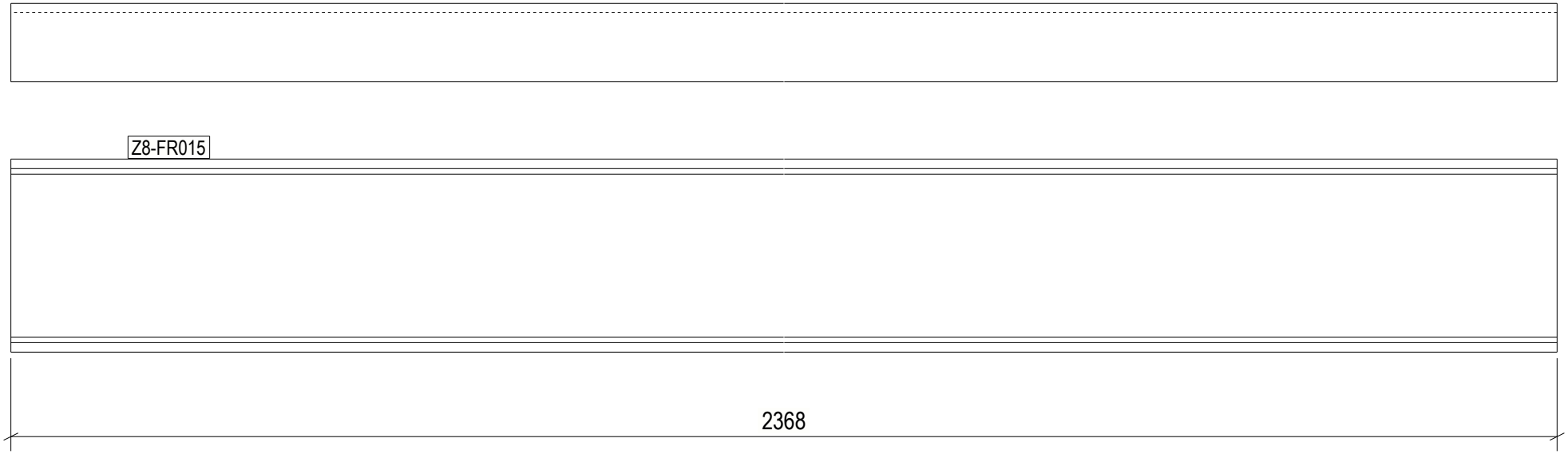

1 REQ'D AS DRAWN MK'D Z8-FR015

6 October Monorail
Engineering Unit
Valid For Construction

GENERAL NOTES:

1. THE DIMENSIONS SHOWN ARE NOMINAL (IN MILLIMETERS), U.N.O.
2. WELD SIZESHALL BE AISC MINIMUM OF 6 mm UNLESS NOTED OTHERWISE.
3. ALL FIELD WELDS SHALL BE INSPECTED PER QUALITY ASSURANCE AND SPECIAL INSPECTIONS.

REFERENCE DRAWINGS

1	93M-BOA-NAT-LOT-04833
2	93M-BOA-NAT-LOT-09170
3	93M-BOA-NAT-LOT-01976
4	93M-BOA-NAT-LOT-20021
5	
6	
7	
8	
9	

6TH OF OCTOBER CITY RAIL TRANSIT MONORAIL

The Authority — Hill International Consultant — Main Contractor — Structural Designer

KEY PLAN:

SCALE	SHOPDRAWING	DATE
AS SHOWN		12/09/2023

REV.	DATE	DSG	CHK	APP	AMENDMENTS	STATUS
B	12/05/2023	M.KH	M.KH	DR.M.M	ISSUED FOR INFORMATION	IFI
A	11/20/2022	M.KH	M.KH	DR.M.M	ISSUED FOR INFORMATION	IFI

DRAWING TITLE

6TH OF OCTOBER MONORAIL
SERVICE WALKWAYS
ZONE (1008)
Z8-FR015

Project Code	Rubric	Initiator	Lot	Ref	Number	Revision
93M	047	ACC	60	DEP	DWG	08549	B

Tekla structures

approval is subject to approval of coordination package between multi-discipline

REVIEWED WITH COMMENT
MONORAILS PROJECT

All holes are 22mm U.N.O Length & Area & Weight per piece

Mark	Profile	Grade	QTY	Length	Area	Weight
Z8-FR014	UPN160	S235JR	1	2368.0	1.30	44.6

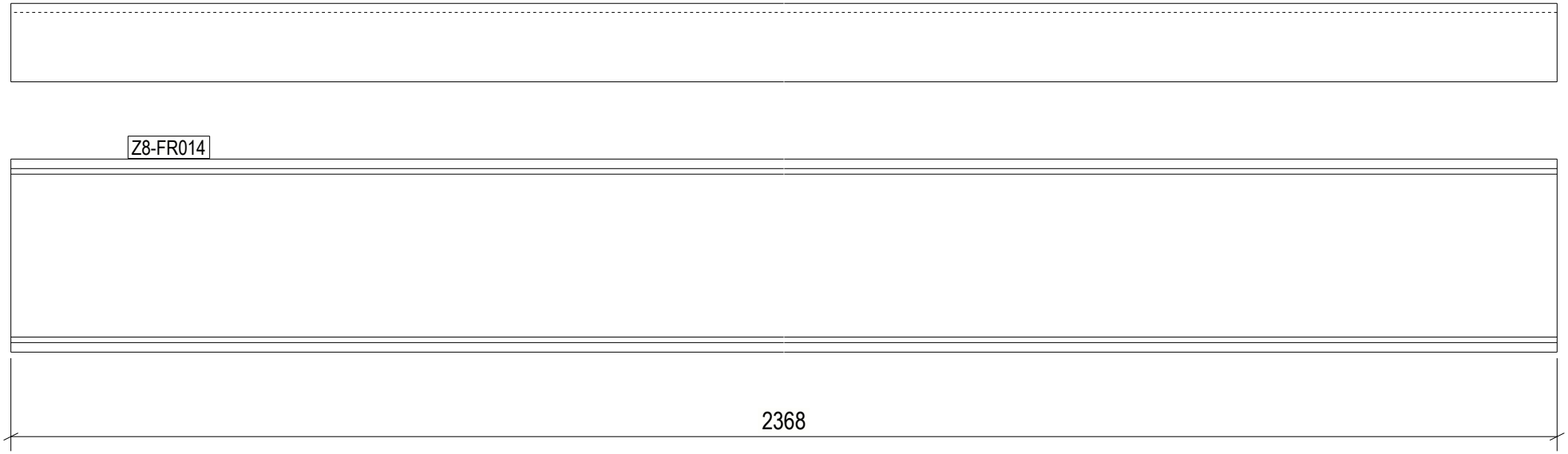

1 REQ'D AS DRAWN MK'D Z8-FR014

6 October Monorail
Engineering Unit
Valid For Construction

GENERAL NOTES:

1. THE DIMENSIONS SHOWN ARE NOMINAL (IN MILLIMETERS), U.N.O.
2. WELD SIZESHALL BE AISC MINIMUM OF 6 mm UNLESS NOTED OTHERWISE.
3. ALL FIELD WELDS SHALL BE INSPECTED PER QUALITY ASSURANCE AND SPECIAL INSPECTIONS.

REFERENCE DRAWINGS

1	93M-BOA-NAT-LOT-04833
2	93M-BOA-NAT-LOT-09170
3	93M-BOA-NAT-LOT-01976
4	93M-BOA-NAT-LOT-20021
5	
6	
7	
8	
9	

6TH OF OCTOBER CITY RAIL TRANSIT MONORAIL

The Authority — Hill International Consultant — Main Contractor — Structural Designer

KEY PLAN:

REV.	DATE	DSG	CHK	APP	AMENDMENTS	STATUS
B	12/05/2023	M.KH	M.KH	DR.M.M	ISSUED FOR INFORMATION	IFI
A	11/20/2022	M.KH	M.KH	DR.M.M	ISSUED FOR INFORMATION	IFI

SCALE AS SHOWN | SHOPDRAWING | DATE 12/05/2023

DRAWING TITLE
6TH OF OCTOBER MONORAIL
SERVICE WALKWAYS
ZONE (1008)
Z8-FR014

Project Code	Rubric	Initiator	Lot	Ref	Number	Revision
9 3 M	0 4 7 6	A C C	6 0 D E P	D W G	0 8 5 5 0	B

Tekla structures

approval is subject to approval of coordination package between multi-discipline

REVIEWED WITH COMMENT
MONORAILS PROJECT

All holes are 22mm U.N.O Length & Area & Weight per piece

Mark	Profile	Grade	QTY	Length	Area	Weight
Z8-FR013	UPN160	S235JR	1	2368.0	1.30	44.6

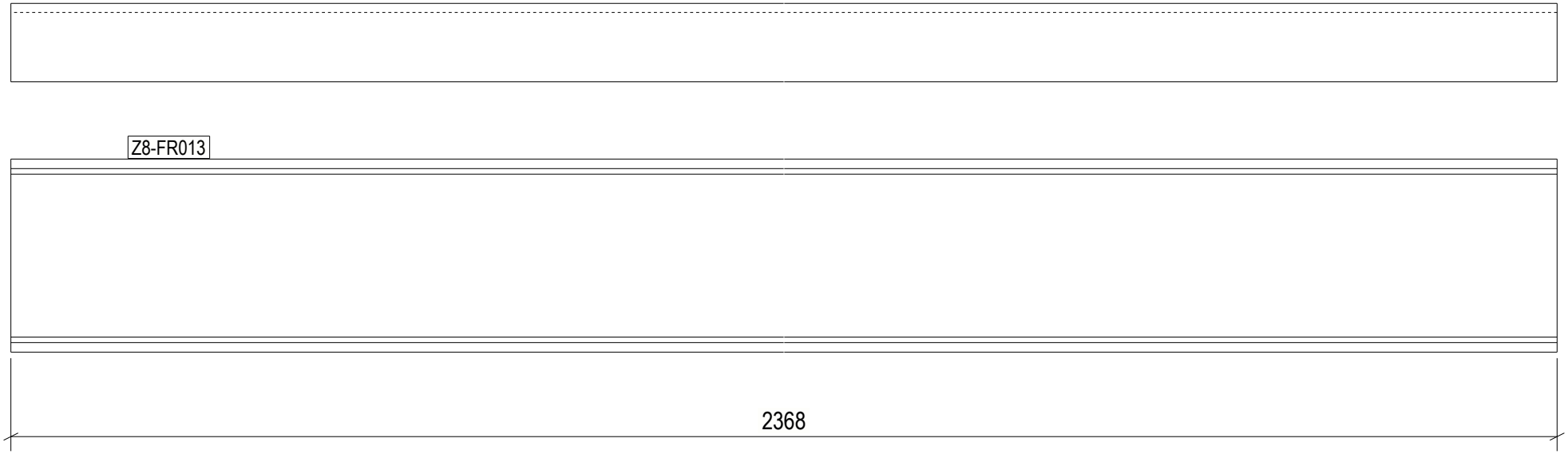

1 REQ'D AS DRAWN MK'D Z8-FR013

6 October Monorail
Engineering Unit
Valid For Construction

GENERAL NOTES:

1. THE DIMENSIONS SHOWN ARE NOMINAL (IN MILLIMETERS), U.N.O.
2. WELD SIZESHALL BE AISC MINIMUM OF 6 mm UNLESS NOTED OTHERWISE.
3. ALL FIELD WELDS SHALL BE INSPECTED PER QUALITY ASSURANCE AND SPECIAL INSPECTIONS.

REFERENCE DRAWINGS

1	93M-BOA-NAT-LOT-04833
2	93M-BOA-NAT-LOT-09170
3	93M-BOA-NAT-LOT-01976
4	93M-BOA-NAT-LOT-20021
5	
6	
7	
8	
9	

6TH OF OCTOBER CITY RAIL TRANSIT MONORAIL

The Authority — Hill International Consultant — Main Contractor — Structural Designer

KEY PLAN:

REV.	DATE	DSG	CHK	APP	AMENDMENTS	STATUS
B	12/05/2023	M.KH	M.KH	DR.M.M	ISSUED FOR INFORMATION	IFI
A	11/20/2022	M.KH	M.KH	DR.M.M	ISSUED FOR INFORMATION	IFI

SCALE: AS SHOWN | SHOPDRAWING | DATE: 12/05/2023

DRAWING TITLE
6TH OF OCTOBER MONORAIL
SERVICE WALKWAYS
ZONE (1008)
Z8-FR013

Project Code	Rubric	Initiator	Lot	Ref	Number	Revision
9 3 M	0 4 7 6	A C C	6 0 D E	P D W	G 0 8 5 5 1	B

Tekla structures

approval is subject to approval of coordination package between multi-discipline

REVIEWED WITH COMMENT
MONORAILS PROJECT

All holes are 22mm U.N.O Length & Area & Weight per piece

Mark	Profile	Grade	QTY	Length	Area	Weight
Z8-FR012	UPN160	S235JR	1	2368.0	1.30	44.6

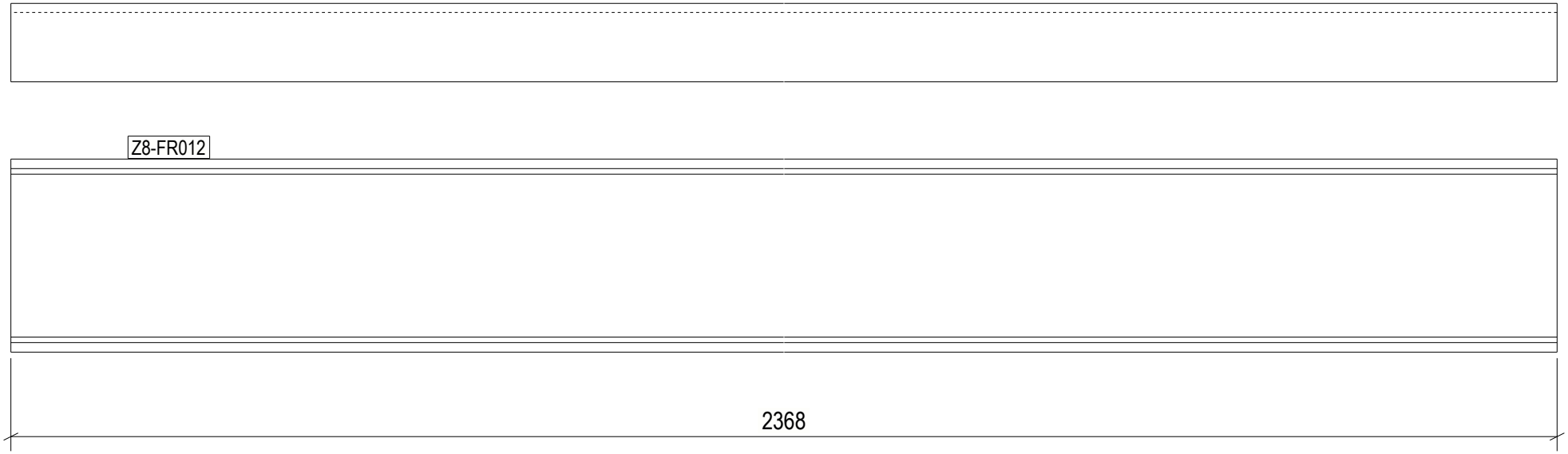

1 REQ'D AS DRAWN MK'D Z8-FR012

6 October Monorail
Engineering Unit
Valid For Construction

GENERAL NOTES:

1. THE DIMENSIONS SHOWN ARE NOMINAL (IN MILLIMETERS), U.N.O.
2. WELD SIZESHALL BE AISC MINIMUM OF 6 mm UNLESS NOTED OTHERWISE.
3. ALL FIELD WELDS SHALL BE INSPECTED PER QUALITY ASSURANCE AND SPECIAL INSPECTIONS.

REFERENCE DRAWINGS

1	93M-BOA-NAT-LOT-04833
2	93M-BOA-NAT-LOT-09170
3	93M-BOA-NAT-LOT-01976
4	93M-BOA-NAT-LOT-20021
5	
6	
7	
8	
9	

6TH OF OCTOBER CITY RAIL TRANSIT MONORAIL

The Authority — Hill International Consultant — Main Contractor — Structural Designer

KEY PLAN:

REV.	DATE	DSG	CHK	APP	AMENDMENTS	STATUS
B	12/05/2023	M.KH	M.KH	DR.M.M	ISSUED FOR INFORMATION	IFI
A	11/20/2022	M.KH	M.KH	DR.M.M	ISSUED FOR INFORMATION	IFI

SCALE: AS SHOWN | SHOPDRAWING | DATE: 12/05/2023

DRAWING TITLE
6TH OF OCTOBER MONORAIL
SERVICE WALKWAYS
ZONE (1008)
Z8-FR012

Project Code	Rubric	Initiator	Lot	Ref	Number	Revision
9 3 M	0 4 7 6	A C C	6 0 D E P	D W G	0 8 5 5 2	B

Tekla structures

approval is subject to approval of coordination package between multi-discipline

REVIEWED WITH COMMENT
MONORAILS PROJECT

All holes are 22mm U.N.O Length & Area & Weight per piece

Mark	Profile	Grade	QTY	Length	Area	Weight
Z8-FR011	UPN160	S235JR	35	2368.0	1.30	44.6

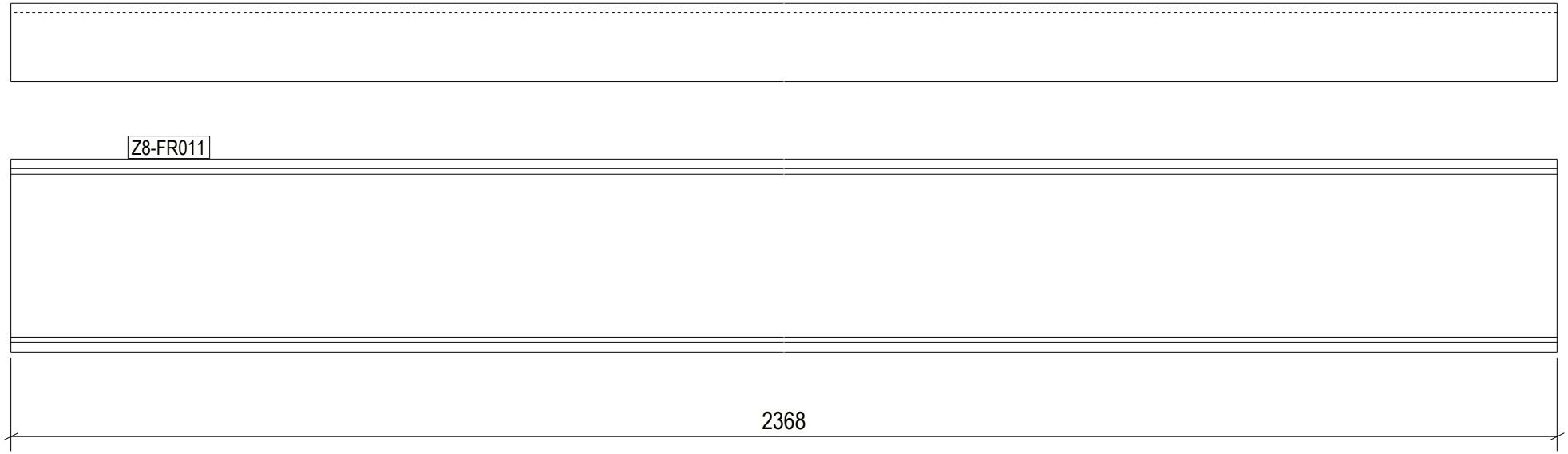

35 REQ'D AS DRAWN MK'D Z8-FR011

6 October Monorail
Engineering Unit
Valid For Construction

GENERAL NOTES:

1. THE DIMENSIONS SHOWN ARE NOMINAL (IN MILLIMETERS), U.N.O.
2. WELD SIZESHALL BE AISC MINIMUM OF 6 mm UNLESS NOTED OTHERWISE.
3. ALL FIELD WELDS SHALL BE INSPECTED PER QUALITY ASSURANCE AND SPECIAL INSPECTIONS.

REFERENCE DRAWINGS

1	93M-BOA-NAT-LOT-04833
2	93M-BOA-NAT-LOT-09170
3	93M-BOA-NAT-LOT-01976
4	93M-BOA-NAT-LOT-20021
5	
6	
7	
8	
9	

6TH OF OCTOBER CITY RAIL TRANSIT MONORAIL

The Authority — Hill International Consultant — Main Contractor — Structural Designer

KEY PLAN:

REV.	DATE	DSG	CHK	APP	AMENDMENTS	STATUS
B	12/05/2023	M.KH	M.KH	DR.BIM	ISSUED FOR INFORMATION	IFI
A	11/20/2022	M.KH	M.KH	DR.BIM	ISSUED FOR INFORMATION	IFI

SCALE: AS SHOWN | SHOPDRAWING | DATE: 12/05/2023

DRAWING TITLE
6TH OF OCTOBER MONORAIL
SERVICE WALKWAYS
ZONE (1008)
Z8-FR011

Project Code	Rubric	Initiator	Lot	Ref	Number	Revision
9 3 M	0 4 7 6	A C C	6 0 D E P	D W G	0 8 5 5 3	B

Tekla structures

approval is subject to approval of coordination package between multi-discipline

REVIEWED WITH COMMENT
MONORAILS PROJECT

All holes are 22mm U.N.O Length & Area & Weight per piece

Mark	Profile	Grade	QTY	Length	Area	Weight
Z8-FR010	UPN160	S235JR	1	2368.0	1.30	44.6

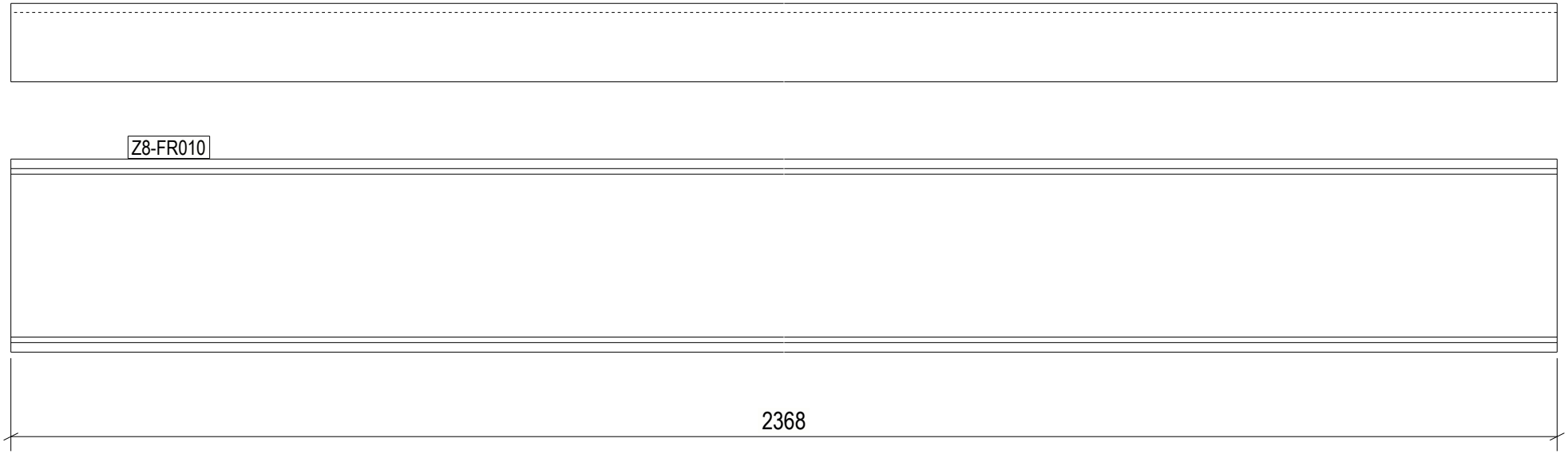

1 REQ'D AS DRAWN MK'D Z8-FR010

6 October Monorail
Engineering Unit
Valid For Construction

GENERAL NOTES:

1. THE DIMENSIONS SHOWN ARE NOMINAL (IN MILLIMETERS), U.N.O.
2. WELD SIZESHALL BE AISC MINIMUM OF 6 mm UNLESS NOTED OTHERWISE.
3. ALL FIELD WELDS SHALL BE INSPECTED PER QUALITY ASSURANCE AND SPECIAL INSPECTIONS.

REFERENCE DRAWINGS

1	93M-BOA-NAT-LOT-04833
2	93M-BOA-NAT-LOT-09170
3	93M-BOA-NAT-LOT-01976
4	93M-BOA-NAT-LOT-20021
5	
6	
7	
8	
9	

6TH OF OCTOBER CITY RAIL TRANSIT MONORAIL

The Authority — Hill International Consultant — Main Contractor — Structural Designer

KEY PLAN:

REV.	DATE	DSG	CHK	APP	AMENDMENTS	STATUS
B	12/05/2023	M.KH	M.KH	DR.M.M	ISSUED FOR INFORMATION	IFI
A	11/20/2022	M.KH	M.KH	DR.M.M	ISSUED FOR INFORMATION	IFI

SCALE: AS SHOWN | SHOPDRAWING | DATE: 12/05/2023

DRAWING TITLE
6TH OF OCTOBER MONORAIL
SERVICE WALKWAYS
ZONE (1008)
Z8-FR010

Project Code	Rubric	Initiator	Lot	Ref	Number	Revision
9 3 M	0 4 7 6	A C C	6 0 D E	P D W G	0 8 5 5 4	B

Tekla structures

approval is subject to approval of coordination package between multi-discipline

REVIEWED WITH COMMENT
MONORAILS PROJECT

All holes are 22mm U.N.O Length & Area & Weight per piece

Mark	Profile	Grade	QTY	Length	Area	Weight
Z8-FR009	UPN160	S235JR	1	2368.0	1.30	44.6

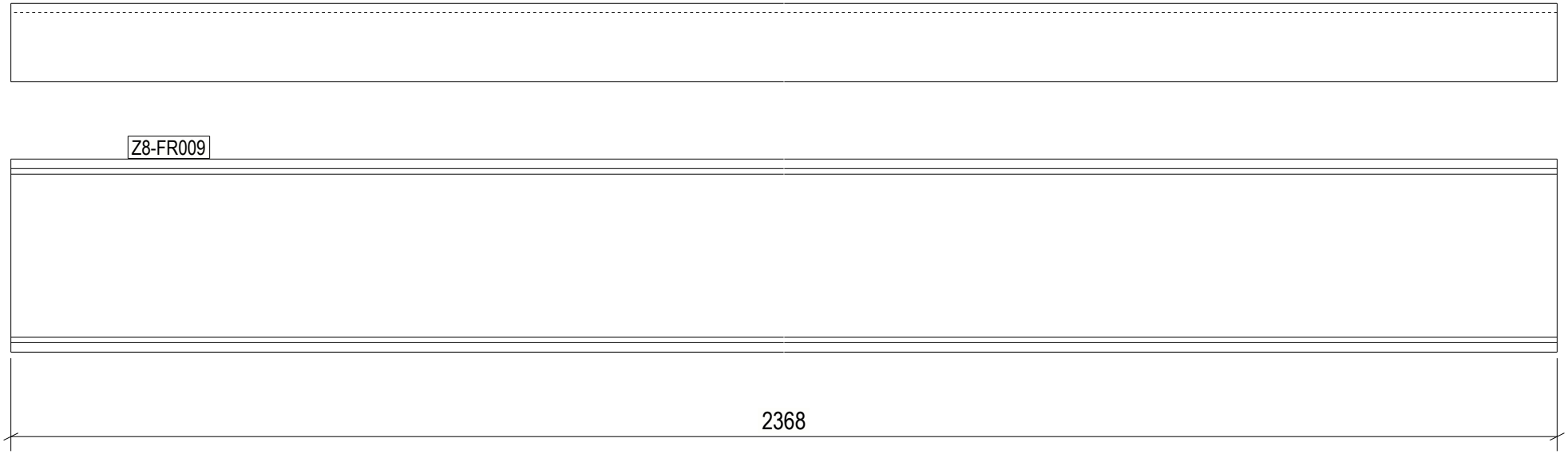

1 REQ'D AS DRAWN MK'D Z8-FR009

6 October Monorail
Engineering Unit
Valid For Construction

GENERAL NOTES:

1. THE DIMENSIONS SHOWN ARE NOMINAL (IN MILLIMETERS), U.N.O.
2. WELD SIZESHALL BE AISC MINIMUM OF 6 mm UNLESS NOTED OTHERWISE.
3. ALL FIELD WELDS SHALL BE INSPECTED PER QUALITY ASSURANCE AND SPECIAL INSPECTIONS.

REFERENCE DRAWINGS

1	93M-BOA-NAT-LOT-04833
2	93M-BOA-NAT-LOT-09170
3	93M-BOA-NAT-LOT-01976
4	93M-BOA-NAT-LOT-20021
5	
6	
7	
8	
9	

6TH OF OCTOBER CITY RAIL TRANSIT MONORAIL

The Authority — Hill International Consultant — Main Contractor — Structural Designer

KEY PLAN:

SCALE	SHOPDRAWING	DATE
AS SHOWN		12/09/2023

REV	DATE	DSG	CHK	APP	AMENDMENTS	STATUS
B	12/05/2023	M.KH	M.KH	DR.M.M	ISSUED FOR INFORMATION	IFI
A	11/20/2022	M.KH	M.KH	DR.M.M	ISSUED FOR INFORMATION	IFI

DRAWING TITLE

6TH OF OCTOBER MONORAIL
SERVICE WALKWAYS
ZONE (1008)
Z8-FR009

Project Code	Rubric	Initiator	Lot	Ref	Number	Revision
9 3 M	0 4 7 6	A C C	6 0 D E P	D W G	0 8 5 5 5	B

Tekla structures

approval is subject to approval of coordination package between multi-discipline

REVIEWED WITH COMMENT
MONORAILS PROJECT

All holes are 22mm U.N.O Length & Area & Weight per piece

Mark	Profile	Grade	QTY	Length	Area	Weight
Z8-FR008	UPN160	S235JR	1	2368.0	1.30	44.6

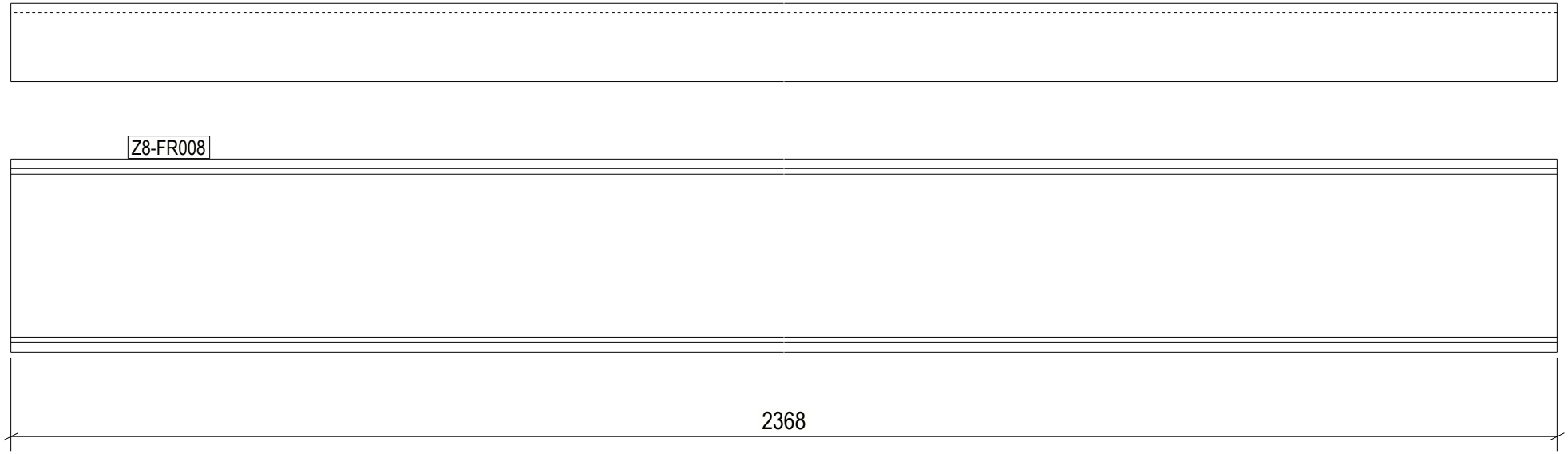

1 REQ'D AS DRAWN MK'D Z8-FR008

6 October Monorail
Engineering Unit
Valid For Construction

GENERAL NOTES:

1. THE DIMENSIONS SHOWN ARE NOMINAL (IN MILLIMETERS), U.N.O.
2. WELD SIZESHALL BE AISC MINIMUM OF 6 mm UNLESS NOTED OTHERWISE.
3. ALL FIELD WELDS SHALL BE INSPECTED PER QUALITY ASSURANCE AND SPECIAL INSPECTIONS.

REFERENCE DRAWINGS

1	93M-BOA-NAT-LOT-04833
2	93M-BOA-NAT-LOT-09170
3	93M-BOA-NAT-LOT-01976
4	93M-BOA-NAT-LOT-20021
5	
6	
7	
8	
9	

6TH OF OCTOBER CITY RAIL TRANSIT MONORAIL

The Authority | Hill International Consultant | Main Contractor | Structural Designer

KEY PLAN:

SCALE	SHOPDRAWING	DATE
AS SHOWN		12/09/2023

REV.	DATE	DSG	CHK	APP	AMENDMENTS	STATUS
B	12/05/2023	M.KH	M.KH	DR.M.M	ISSUED FOR INFORMATION	IFI
A	11/20/2022	M.KH	M.KH	DR.M.M	ISSUED FOR INFORMATION	IFI

DRAWING TITLE

6TH OF OCTOBER MONORAIL
SERVICE WALKWAYS
ZONE (1008)
Z8-FR008

Project Code	Rubric	Initiator	Lot	Ref	Number	Revision
9 3 M	0 4 7 6	A C C	6 0 D E P	D W G	0 8 5 5 6	B

Tekla structures

approval is subject to approval of coordination package between multi-discipline

REVIEWED WITH COMMENT
MONORAILS PROJECT

All holes are 22mm U.N.O Length & Area & Weight per piece

Mark	Profile	Grade	QTY	Length	Area	Weight
Z8-FR007	UPN160	S235JR	1	2368.0	1.30	44.6

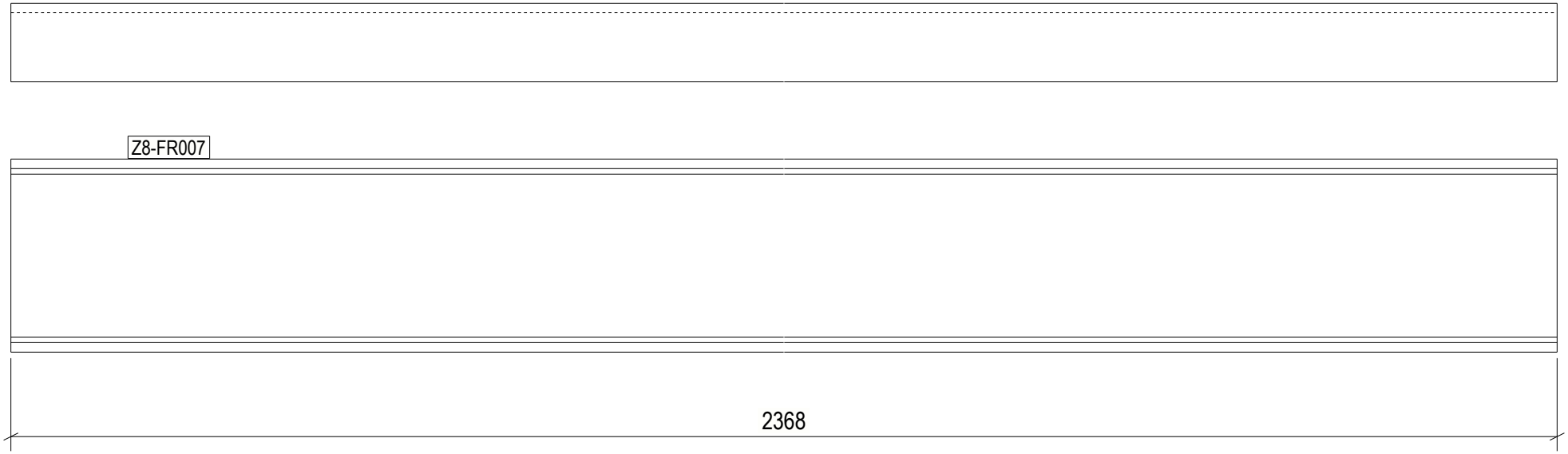

1 REQ'D AS DRAWN MK'D Z8-FR007

6 October Monorail
Engineering Unit
Valid For Construction

GENERAL NOTES:

1. THE DIMENSIONS SHOWN ARE NOMINAL (IN MILLIMETERS), U.N.O.
2. WELD SIZESHALL BE AISC MINIMUM OF 6 mm UNLESS NOTED OTHERWISE.
3. ALL FIELD WELDS SHALL BE INSPECTED PER QUALITY ASSURANCE AND SPECIAL INSPECTIONS.

REFERENCE DRAWINGS

1	93M-BOA-NAT-LOT-04833
2	93M-BOA-NAT-LOT-09170
3	93M-BOA-NAT-LOT-01976
4	93M-BOA-NAT-LOT-20021
5	
6	
7	
8	
9	

6TH OF OCTOBER CITY RAIL TRANSIT MONORAIL

The Authority — Hill International Consultant — Main Contractor — Structural Designer

KEY PLAN:

REV.	DATE	DSG	CHK	APP	AMENDMENTS	STATUS
B	12/05/2023	M.KH	M.KH	DR.BIM	ISSUED FOR INFORMATION	IFI
A	11/20/2022	M.KH	M.KH	DR.BIM	ISSUED FOR INFORMATION	IFI

SCALE: AS SHOWN | SHOPDRAWING | DATE: 12/05/2023

DRAWING TITLE

6TH OF OCTOBER MONORAIL
SERVICE WALKWAYS
ZONE (1008)
Z8-FR007

Project Code	Rubric	Initiator	Lot	Ref	Number	Revision
9 3 M	0 4 7 6	A C C	6 0 D E P	D W G	0 8 5 5 7	B

Tekla structures

approval is subject to approval of coordination package between multi-discipline

REVIEWED WITH COMMENT
MONORAILS PROJECT

All holes are 22mm U.N.O Length & Area & Weight per piece

Mark	Profile	Grade	QTY	Length	Area	Weight
Z8-FR006	UPN160	S235JR	11	2368.0	1.30	44.6

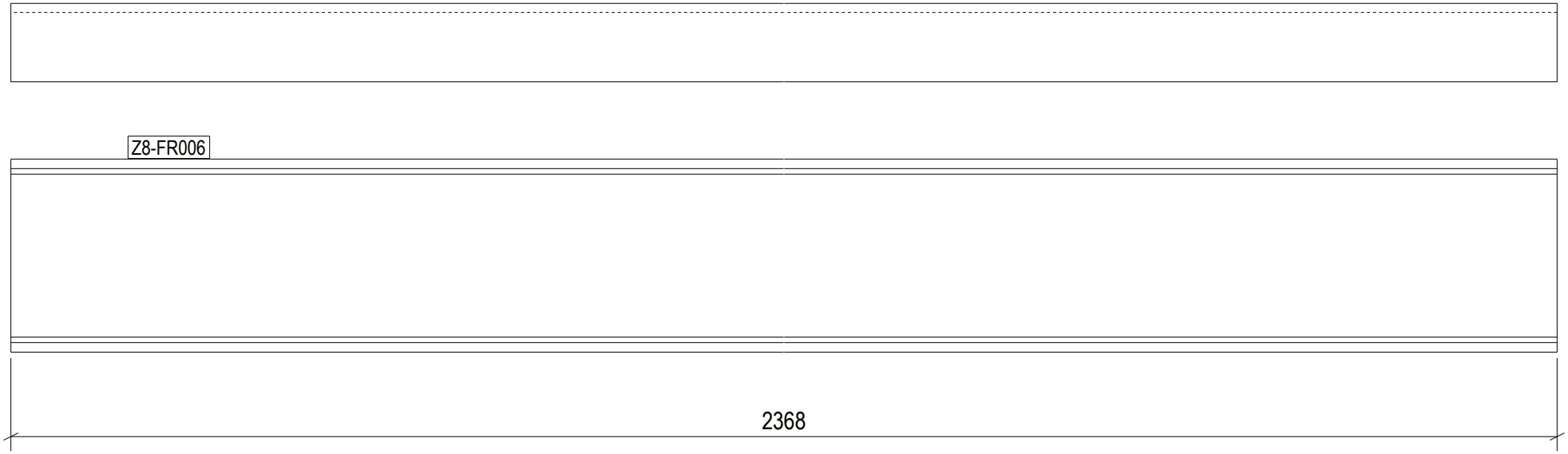

11 REQ'D AS DRAWN MK'D Z8-FR006

6 October Monorail
Engineering Unit
Valid For Construction

GENERAL NOTES:

1. THE DIMENSIONS SHOWN ARE NOMINAL (IN MILLIMETERS), U.N.O.
2. WELD SIZESHALL BE AISC MINIMUM OF 6 mm UNLESS NOTED OTHERWISE.
3. ALL FIELD WELDS SHALL BE INSPECTED PER QUALITY ASSURANCE AND SPECIAL INSPECTIONS.

REFERENCE DRAWINGS

1	93M-BOA-NAT-LOT-04833
2	93M-BOA-NAT-LOT-09170
3	93M-BOA-NAT-LOT-01976
4	93M-BOA-NAT-LOT-20021
5	
6	
7	
8	
9	

6TH OF OCTOBER CITY RAIL TRANSIT MONORAIL

The Authority — Hill International Consultant — Main Contractor — Structural Designer

KEY PLAN:

SCALE	SHOPDRAWING	DATE
AS SHOWN		12/09/2023

REV.	DATE	DSG	CHK	APP	AMENDMENTS	STATUS
B	12/05/2023	M.KH	M.KH	DR.M.M	ISSUED FOR INFORMATION	IFI
A	11/20/2022	M.KH	M.KH	DR.M.M	ISSUED FOR INFORMATION	IFI

DRAWING TITLE

6TH OF OCTOBER MONORAIL
SERVICE WALKWAYS
ZONE (1008)
Z8-FR006

Project Code	Rubric	Initiator	Lot	Ref	Number	Revision
9 3 M	0 4 7 6	A C C	6 0 D E P	D W G	0 8 5 5 8	B

Tekla structures

approval is subject to approval of coordination package between multi-discipline

REVIEWED WITH COMMENT
MONORAILS PROJECT

All holes are 22mm U.N.O Length & Area & Weight per piece

Mark	Profile	Grade	QTY	Length	Area	Weight
Z8-FR005	UPN160	S235JR	1	2368.0	1.30	44.6

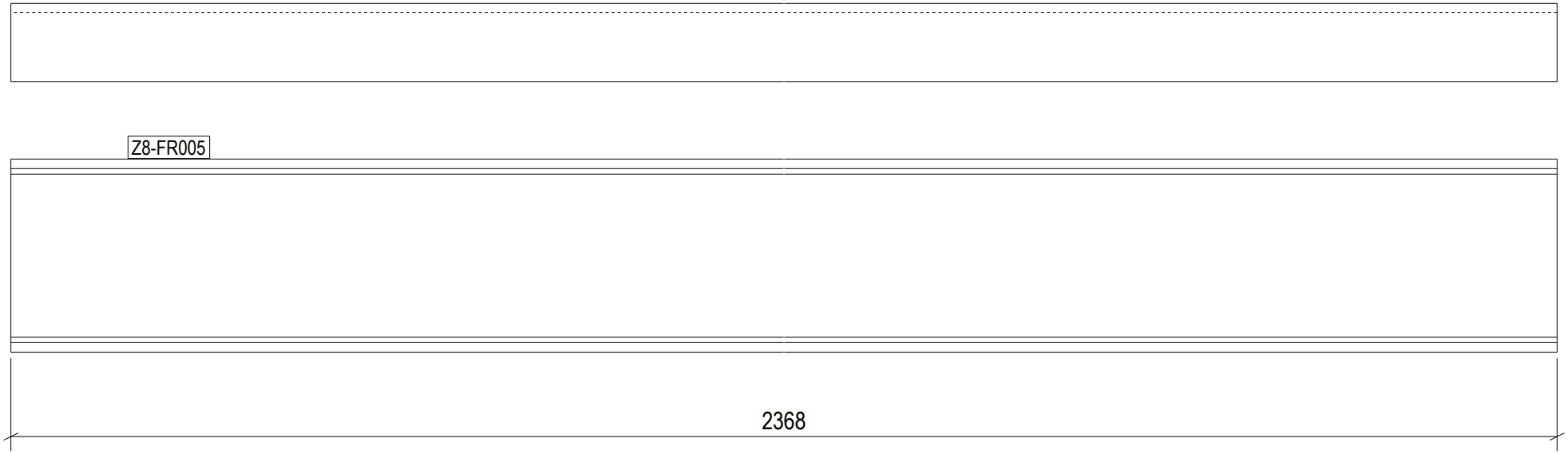

1 REQ'D AS DRAWN MK'D Z8-FR005

6 October Monorail
Engineering Unit
Valid For Construction

GENERAL NOTES:

1. THE DIMENSIONS SHOWN ARE NOMINAL (IN MILLIMETERS), U.N.O.
2. WELD SIZESHALL BE AISC MINIMUM OF 6 mm UNLESS NOTED OTHERWISE.
3. ALL FIELD WELDS SHALL BE INSPECTED PER QUALITY ASSURANCE AND SPECIAL INSPECTIONS.

REFERENCE DRAWINGS

1	93M-BOA-NAT-LOT-04833
2	93M-BOA-NAT-LOT-09170
3	93M-BOA-NAT-LOT-01976
4	93M-BOA-NAT-LOT-20021
5	
6	
7	
8	
9	

6TH OF OCTOBER CITY RAIL TRANSIT MONORAIL

The Authority — Hill International Consultant — Main Contractor — Structural Designer

KEY PLAN:

REV.	DATE	DSG	CHK	APP	AMENDMENTS	STATUS
B	12/05/2023	M.KH	M.KH	DR.M.M	ISSUED FOR INFORMATION	IFI
A	11/20/2022	M.KH	M.KH	DR.M.M	ISSUED FOR INFORMATION	IFI

SCALE: AS SHOWN | SHOPDRAWING | DATE: 12/05/2023

DRAWING TITLE
6TH OF OCTOBER MONORAIL
SERVICE WALKWAYS
ZONE (1008)
Z8-FR005

Project Code	Rubric	Initiator	Lot	Ref	Number	Revision
9 3 M 0 4 7 6	A C C	6 0	D E P	D W G	0 8 5 5 9	B

Tekla structures

approval is subject to approval of coordination package between multi-discipline

REVIEWED WITH COMMENT
MONORAILS PROJECT

All holes are 22mm U.N.O Length & Area & Weight per piece

Mark	Profile	Grade	QTY	Length	Area	Weight
Z8-FR004	UPN160	S235JR	1	2368.0	1.30	44.6

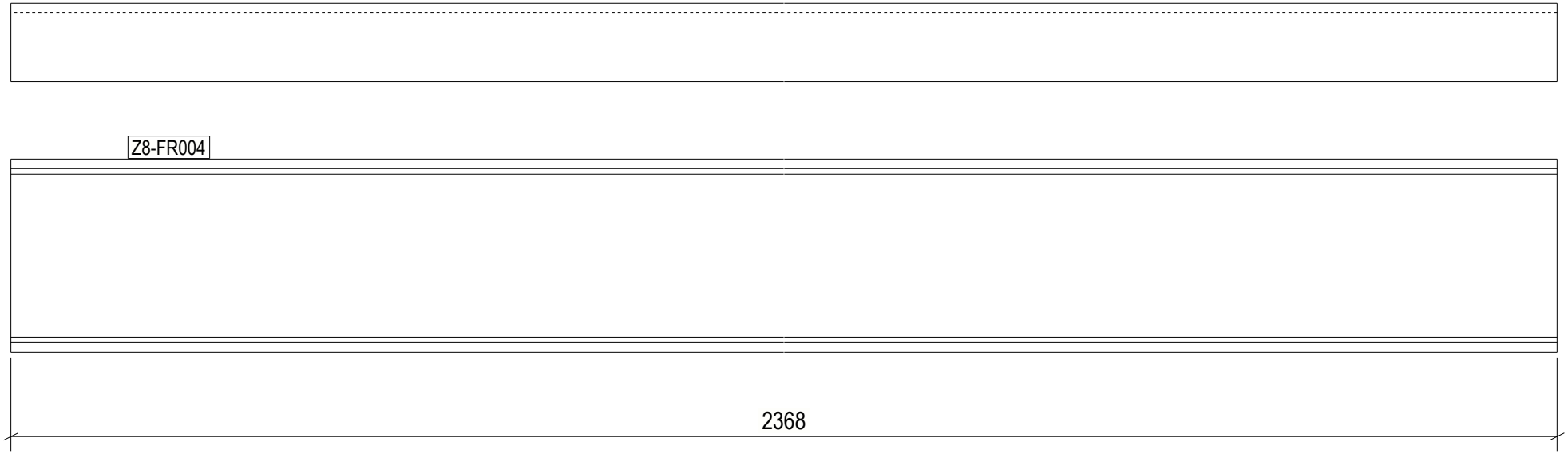

1 REQ'D AS DRAWN MK'D Z8-FR004

6 October Monorail
Engineering Unit
Valid For Construction

GENERAL NOTES:

1. THE DIMENSIONS SHOWN ARE NOMINAL (IN MILLIMETERS), U.N.O.
2. WELD SIZESHALL BE AISC MINIMUM OF 6 mm UNLESS NOTED OTHERWISE.
3. ALL FIELD WELDS SHALL BE INSPECTED PER QUALITY ASSURANCE AND SPECIAL INSPECTIONS.

REFERENCE DRAWINGS

1	93M-BOA-NAT-LOT-04833
2	93M-BOA-NAT-LOT-09170
3	93M-BOA-NAT-LOT-01976
4	93M-BOA-NAT-LOT-20021
5	
6	
7	
8	
9	

6TH OF OCTOBER CITY RAIL TRANSIT MONORAIL

The Authority | Hill International Consultant | Main Contractor | Structural Designer

KEY PLAN:

REV.	DATE	DSG	CHK	APP	AMENDMENTS	STATUS
B	12/05/2023	M.KH	M.KH	DR.BUM	ISSUED FOR INFORMATION	IFI
A	11/20/2022	M.KH	M.KH	DR.BUM	ISSUED FOR INFORMATION	IFI

SCALE: AS SHOWN | SHOPDRAWING | DATE: 12/05/2023

DRAWING TITLE
6TH OF OCTOBER MONORAIL
SERVICE WALKWAYS
ZONE (1008)
Z8-FR004

Project Code	Rubric	Initiator	Lot	Ref	Number	Revision
93M	047	6ACC	60DEP	DWG	0856	B

Tekla structures

approval is subject to approval of coordination package between multi-discipline

REVIEWED WITH COMMENT
MONORAILS PROJECT

All holes are 22mm U.N.O Length & Area & Weight per piece

Mark	Profile	Grade	QTY	Length	Area	Weight
Z8-FR003	UPN160	S235JR	1	2368.0	1.30	44.6

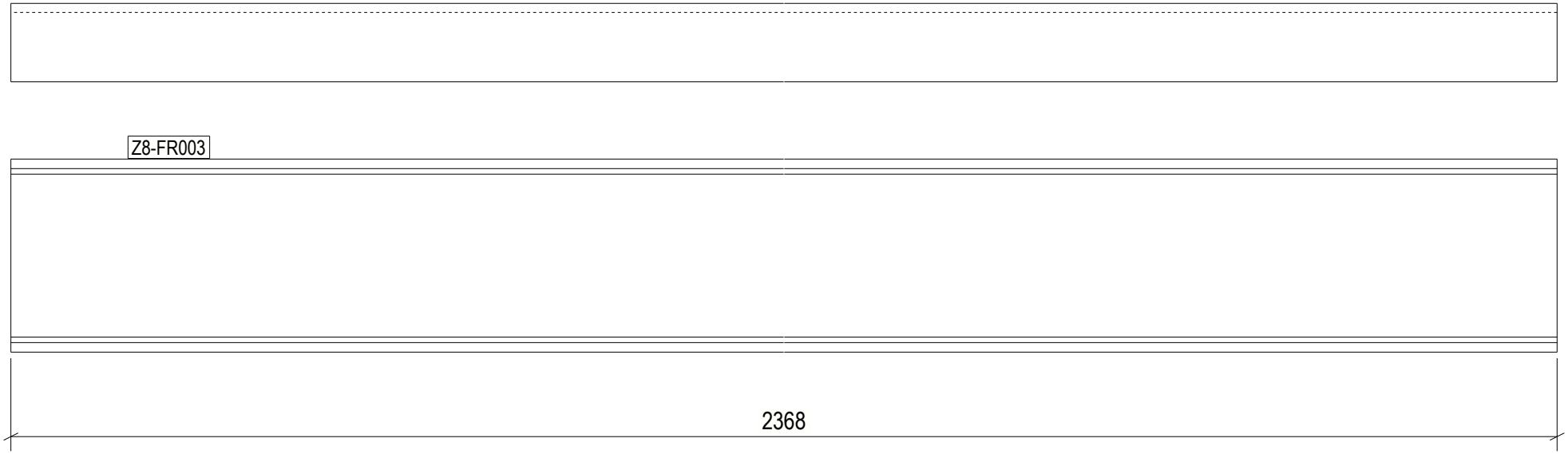

1 REQ'D AS DRAWN MK'D Z8-FR003

6 October Monorail
Engineering Unit
Valid For Construction

GENERAL NOTES:

1. THE DIMENSIONS SHOWN ARE NOMINAL (IN MILLIMETERS), U.N.O.
2. WELD SIZESHALL BE AISC MINIMUM OF 6 mm UNLESS NOTED OTHERWISE.
3. ALL FIELD WELDS SHALL BE INSPECTED PER QUALITY ASSURANCE AND SPECIAL INSPECTIONS.

REFERENCE DRAWINGS

1	93M-BOA-NAT-LOT-04833
2	93M-BOA-NAT-LOT-09170
3	93M-BOA-NAT-LOT-01976
4	93M-BOA-NAT-LOT-20021
5	
6	
7	
8	
9	

6TH OF OCTOBER CITY RAIL TRANSIT MONORAIL

The Authority — Hill International Consultant — Main Contractor — Structural Designer

KEY PLAN:

REV.	DATE	DSG	CHK	APP	AMENDMENTS	STATUS
B	12/05/2023	M.KH	M.KH	DR.M.M	ISSUED FOR INFORMATION	IFI
A	11/20/2022	M.KH	M.KH	DR.M.M	ISSUED FOR INFORMATION	IFI

SCALE: AS SHOWN | SHOPDRAWING | DATE: 12/05/2023

DRAWING TITLE
6TH OF OCTOBER MONORAIL
SERVICE WALKWAYS
ZONE (1008)
Z8-FR003

Project Code	Rubric	Initiator	Lot	Ref	Number	Revision
9 3 M	0 4 7 6	A C C	6 0 D E	P D W	G 0 8 5 6 1	B

Tekla structures

All holes are 22mm U.N.O Length & Area & Weight per piece

Mark	Profile	Grade	QTY	Length	Area	Weight
Z8-FR002	UPN160	S235JR	1	2368.0	1.30	44.6

approval is subject to approval of coordination package between multi-discipline

REVIEWED WITH COMMENT
MONORAILS PROJECT

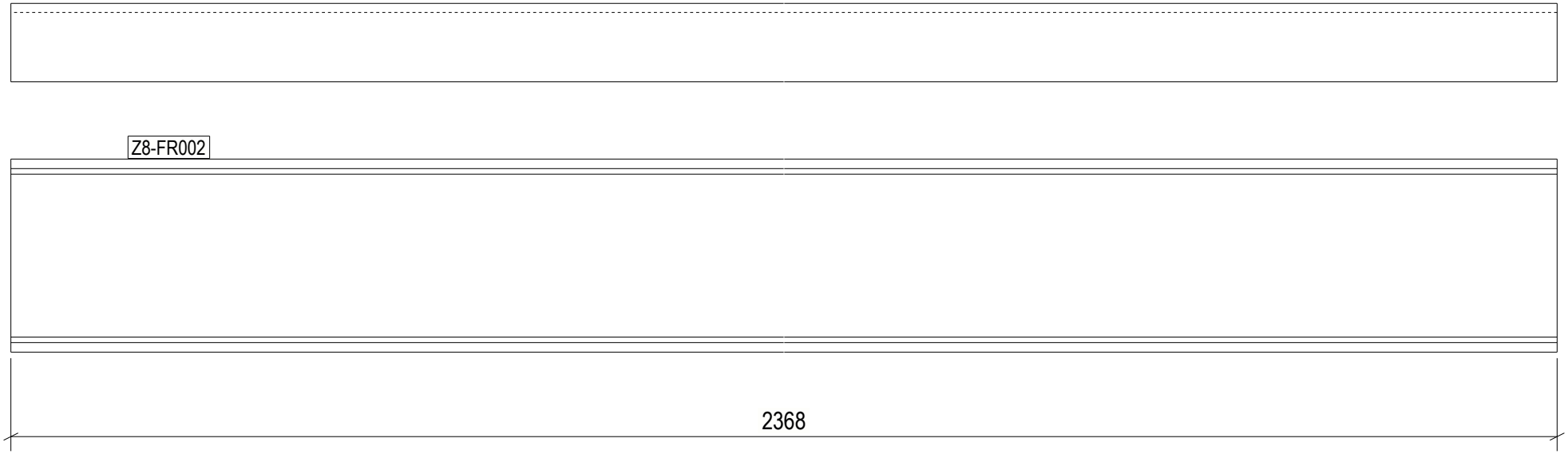

1 REQ'D AS DRAWN MK'D Z8-FR002

6 October Monorail
Engineering Unit
Valid For Construction

GENERAL NOTES:

1. THE DIMENSIONS SHOWN ARE NOMINAL (IN MILLIMETERS), U.N.O.
2. WELD SIZESHALL BE AISC MINIMUM OF 6 mm UNLESS NOTED OTHERWISE.
3. ALL FIELD WELDS SHALL BE INSPECTED PER QUALITY ASSURANCE AND SPECIAL INSPECTIONS.

REFERENCE DRAWINGS

1	93M-BOA-NAT-LOT-04833
2	93M-BOA-NAT-LOT-09170
3	93M-BOA-NAT-LOT-01976
4	93M-BOA-NAT-LOT-20021
5	
6	
7	
8	
9	

6TH OF OCTOBER CITY RAIL TRANSIT MONORAIL

The Authority — Hill International Consultant — Main Contractor — Structural Designer

KEY PLAN:

SCALE	SHOPDRAWING	DATE
AS SHOWN		12/09/2023

REV	DATE	DSG	CHK	APP	AMENDMENTS	STATUS
B	12/05/2023	M.KH	M.KH	DR.M.M	ISSUED FOR INFORMATION	IFI
A	11/20/2022	M.KH	M.KH	DR.M.M	ISSUED FOR INFORMATION	IFI

DRAWING TITLE

6TH OF OCTOBER MONORAIL
SERVICE WALKWAYS
ZONE (1008)
Z8-FR002

Project Code	Rubric	Initiator	Lot	Ref	Number	Revision
9 3 M	0 4 7 6	A C C	6 0 D E P	D W G	0 8 5 6 2	B

Tekla structures

approval is subject to approval of coordination package between multi-discipline

REVIEWED WITH COMMENT MONORAILS PROJECT

All holes are 22mm U.N.O Length & Area & Weight per piece

Mark	Profile	Grade	QTY	Length	Area	Weight
Z8-FR001	UPN160	S235JR	1	2368.0	1.30	44.6

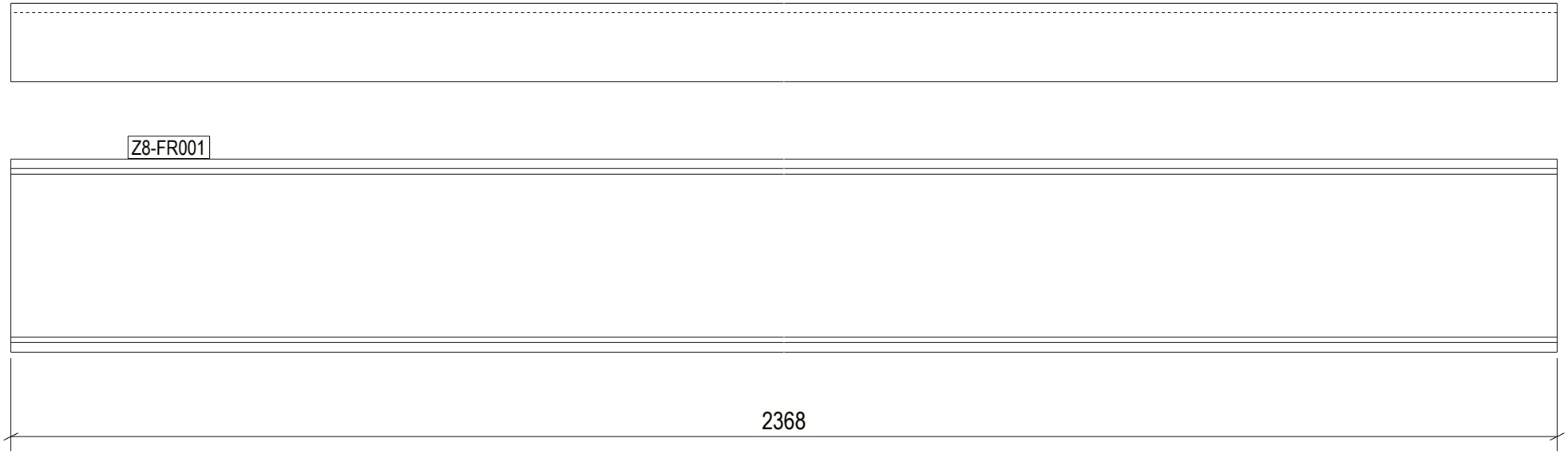

1 REQ'D AS DRAWN MK'D Z8-FR001

6 October Monorail Engineering Unit Valid For Construction

GENERAL NOTES:

1. THE DIMENSIONS SHOWN ARE NOMINAL (IN MILLIMETERS), U.N.O.
2. WELD SIZESHALL BE AISC MINIMUM OF 6 mm UNLESS NOTED OTHERWISE.
3. ALL FIELD WELDS SHALL BE INSPECTED PER QUALITY ASSURANCE AND SPECIAL INSPECTIONS.

REFERENCE DRAWINGS

1	93M-BOA-NAT-LOT-04833
2	93M-BOA-NAT-LOT-09170
3	93M-BOA-NAT-LOT-01976
4	93M-BOA-NAT-LOT-20021
5	
6	
7	
8	
9	

6TH OF OCTOBER CITY RAIL TRANSIT MONORAIL

The Authority — Hill International Consultant — Main Contractor — Structural Designer

KEY PLAN:

SCALE	SHOPDRAWING	DATE
AS SHOWN		12/09/2023

REV.	DATE	DSG	CHK	APP	AMENDMENTS	STATUS
B	12/05/2023	M.KH	M.KH	DR.M.M	ISSUED FOR INFORMATION	IFI
A	11/20/2022	M.KH	M.KH	DR.M.M	ISSUED FOR INFORMATION	IFI

DRAWING TITLE

6TH OF OCTOBER MONORAIL
SERVICE WALKWAYS
ZONE (1008)
Z8-FR001

Project Code	Rubric	Initiator	Lot	Ref	Number	Revision
9 3 M	0 4 7 6	A C C	6 0 D E P	D W G	0 8 5 6 3	B

Tekla structures

All holes are 22mm U.N.O Length & Area & Weight per piece						
Z8-CHQ101	CHQD_PL5*917.1	S235JR	1	1300.0	2.23	43.3
Mark	Profile	Grade	QTY	Length	Area	Weight

approval is subject to approval of coordination package between multi-discipline

REVIEWED WITH COMMENT MONORAILS PROJECT

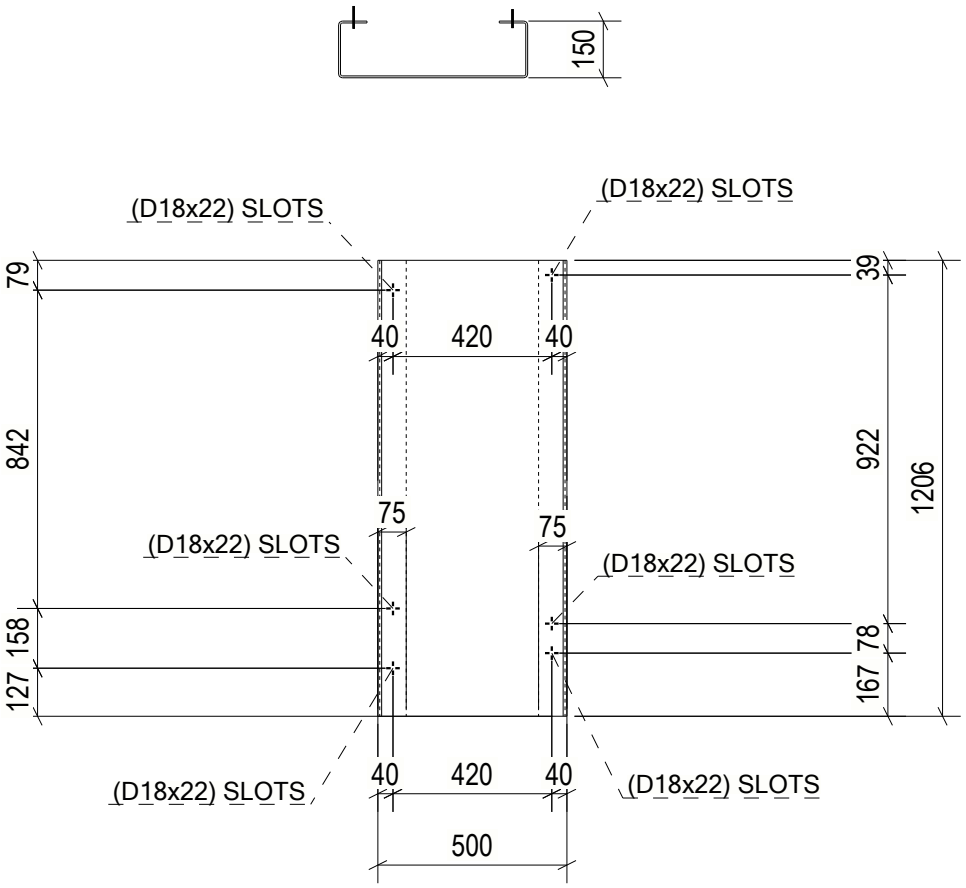

1 REQ'D AS DRAWN MK'D Z8-CHQ101

6 October Monorail Engineering Unit
Valid For Construction

GENERAL NOTES:

1. THE DIMENSIONS SHOWN ARE NOMINAL (IN MILLIMETERS), U.N.O.
2. WELD SIZESHALL BE AISC MINIMUM OF 6 mm UNLESS NOTED OTHERWISE.
3. ALL FIELD WELDS SHALL BE INSPECTED PER QUALITY ASSURANCE AND SPECIAL INSPECTIONS.

REFERENCE DRAWINGS

1	93M-BOA-NAT-LOT-04833
2	93M-BOA-NAT-LOT-09170
3	93M-BOA-NAT-LOT-01976
4	93M-BOA-NAT-LOT-20021
5	
6	
7	
8	
9	

6TH OF OCTOBER CITY RAIL TRANSIT MONORAIL

The Authority — Hill International Consultant — Main Contractor — Structural Designer

KEY PLAN:

SCALE	SHOPDRAWING	DATE
AS SHOWN		12/05/2023

REV	DATE	DSG	CHK	APP	AMENDMENTS	STATUS
B	12/05/2023	M.KH	M.KH	DR.M.M	ISSUED FOR INFORMATION	IFI
A	11/20/2022	M.KH	M.KH	DR.M.M	ISSUED FOR INFORMATION	IFI

DRAWING TITLE

6TH OF OCTOBER MONORAIL SERVICE WALKWAYS ZONE (1008)
Z8-CHQ101

Project Code	Rubric	Initiator	Lot	Ref	Number	Revision
93M	0476	ACC	60DEP	DWG	08564	B

Tekla structures

approval is subject to approval of coordination package between multi-discipline

REVIEWED WITH COMMENT
MONORAILS PROJECT

All holes are 22mm U.N.O Length & Area & Weight per piece						
Z8-CHQ100	CHQD_PL5*917.1	S235JR	1	1300.0	2.23	43.3
Mark	Profile	Grade	QTY	Length	Area	Weight

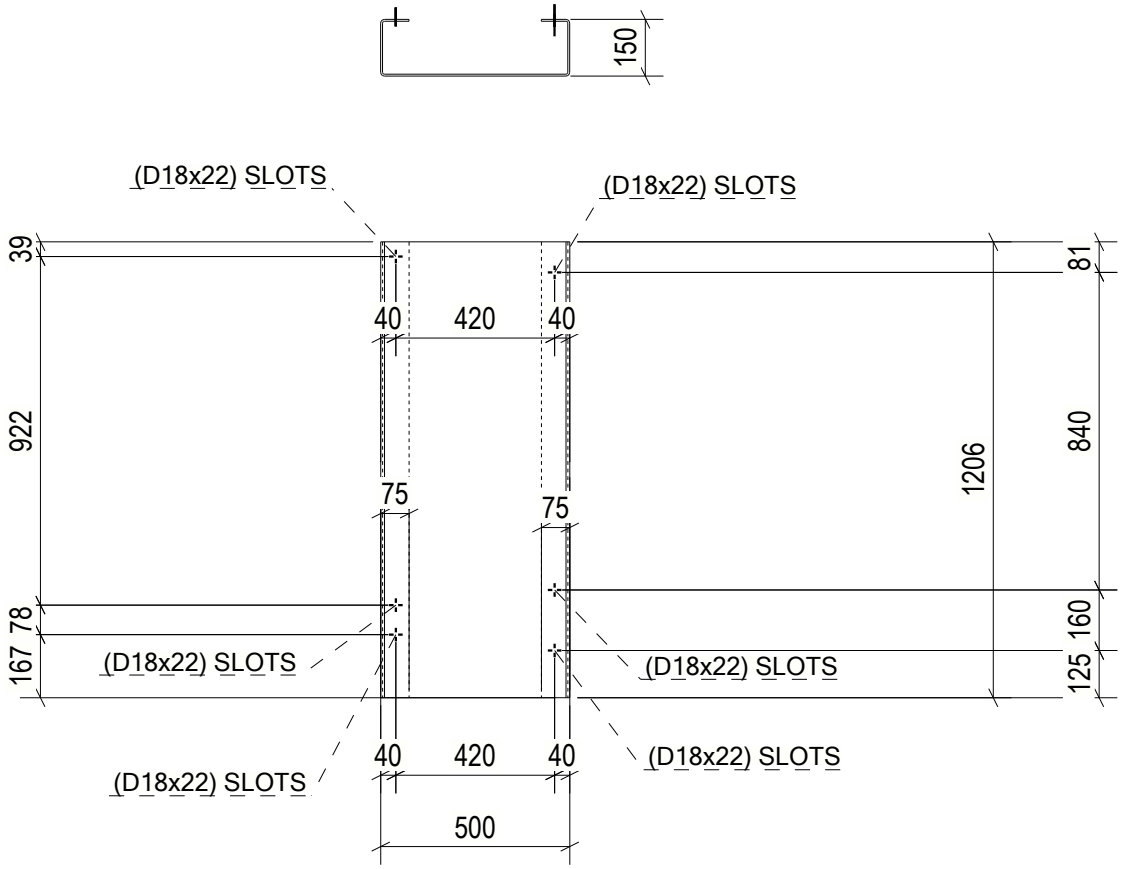

1 REQ'D AS DRAWN MK'D Z8-CHQ100

6 October Monorail Engineering Unit Valid For Construction

GENERAL NOTES:

1. THE DIMENSIONS SHOWN ARE NOMINAL (IN MILLIMETERS), U.N.O.
2. WELD SIZESHALL BE AISC MINIMUM OF 6 mm UNLESS NOTED OTHERWISE.
3. ALL FIELD WELDS SHALL BE INSPECTED PER QUALITY ASSURANCE AND SPECIAL INSPECTIONS.

REFERENCE DRAWINGS

1	93M-BOA-NAT-LOT-04833
2	93M-BOA-NAT-LOT-09170
3	93M-BOA-NAT-LOT-01976
4	93M-BOA-NAT-LOT-20021
5	
6	
7	
8	
9	

6TH OF OCTOBER CITY RAIL TRANSIT MONORAIL

The Authority | Hill International Consultant | Main Contractor | Structural Designer

KEY PLAN:

SCALE: AS SHOWN | SHOPDRAWING | DATE: 12/09/2023

REV.	DATE	DSG	CHK	APP	AMENDMENTS	STATUS
B	12/05/2023	M.KH	M.KH	DR.BM	ISSUED FOR INFORMATION	IFI
A	11/20/2022	M.KH	M.KH	DR.BM	ISSUED FOR INFORMATION	IFI

DRAWING TITLE

6TH OF OCTOBER MONORAIL
SERVICE WALKWAYS
ZONE (1008)
Z8-CHQ100

Project Code	Rubric	Initiator	Lot	Ref	Number	Revision
93M047	ACC60	DEP	DWG	0855		B

Tekla structures

approval is subject to approval of coordination package between multi-discipline

REVIEWED WITH COMMENT
MONORAILS PROJECT

All holes are 22mm U.N.O Length & Area & Weight per piece						
Z8-CHQ099	CHQD_PL5*917.1	S235JR	1	1500.0	2.47	48.0
Mark	Profile	Grade	QTY	Length	Area	Weight

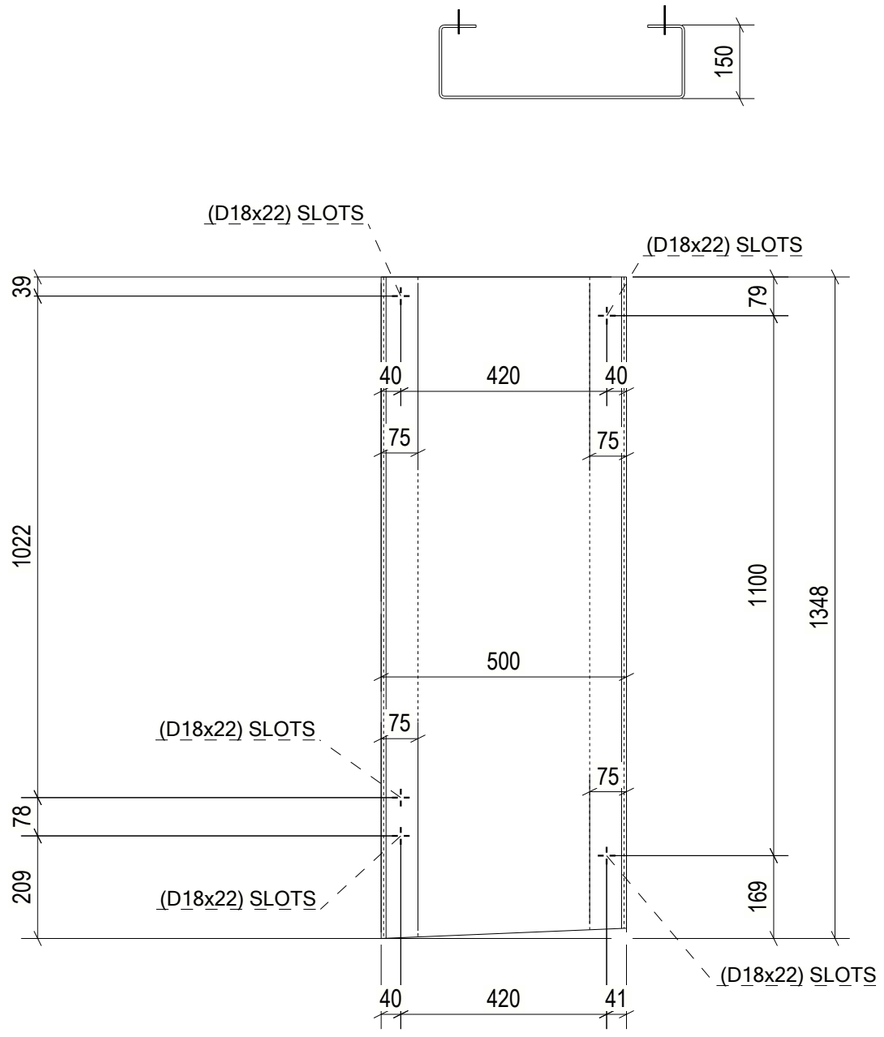

1 REQ'D AS DRAWN MK'D Z8-CHQ099

6 October Monorail Engineering Unit Valid For Construction

GENERAL NOTES:

1. THE DIMENSIONS SHOWN ARE NOMINAL (IN MILLIMETERS), U.N.O.
2. WELD SIZESHALL BE AISC MINIMUM OF 6 mm UNLESS NOTED OTHERWISE.
3. ALL FIELD WELDS SHALL BE INSPECTED PER QUALITY ASSURANCE AND SPECIAL INSPECTIONS.

REFERENCE DRAWINGS

1	93M-BOA-NAT-LOT-04833
2	93M-BOA-NAT-LOT-09170
3	93M-BOA-NAT-LOT-01976
4	93M-BOA-NAT-LOT-20021
5	
6	
7	
8	
9	

6TH OF OCTOBER CITY RAIL TRANSIT MONORAIL

The Authority | Consultant: Hill International | Main Contractor | Structural Designer

KEY PLAN:

SCALE	SHOP DRAWING	DATE
AS SHOWN		12/05/2023

REV.	DATE	DSN	CHK	APP.	AMENDMENTS DESCRIPTION	STATUS
B	12/05/2023	M.KH	M.KH	DR.M.M	ISSUED FOR INFORMATION	IFI

DRAWING TITLE

6TH OF OCTOBER MONORAIL
SERVICE WALKWAYS
ZONE (1008)
Z8-CHQ099

Project Code	Rubric	Initiator	Lot	Ref	Number	Revision
9 3	M 0 4 7 6	A C C	6 0 D E P	D W G	0 8 5 6 6	B

Tekla structures

approval is subject to approval of coordination package between multi-discipline

REVIEWED WITH COMMENT
MONORAILS PROJECT

All holes are 22mm U.N.O Length & Area & Weight per piece						
Z8-CHQ098	CHQD_PL5*917.1	S235JR	1	1500.0	2.51	48.8
Mark	Profile	Grade	QTY	Length	Area	Weight

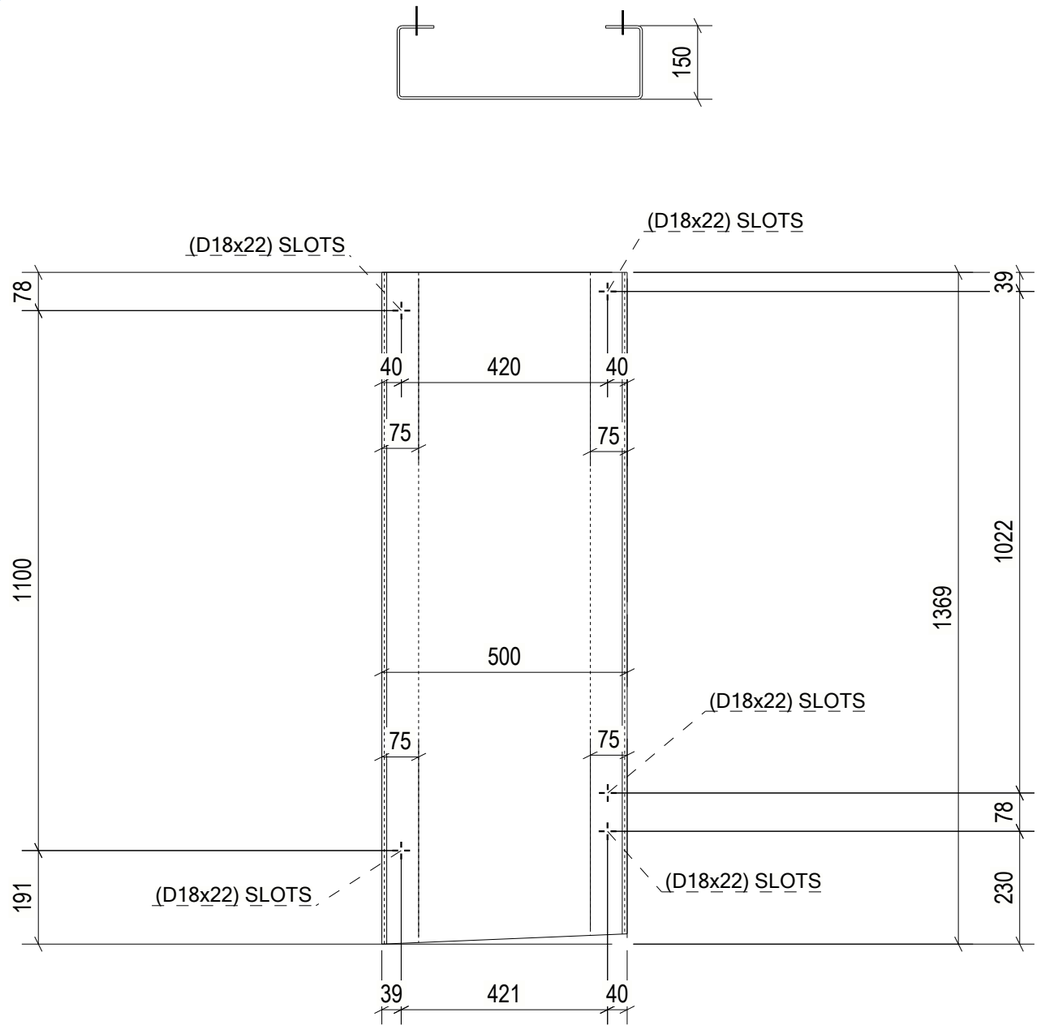

1 REQ'D AS DRAWN MK'D Z8-CHQ098

6 October Monorail Engineering Unit Valid For Construction

GENERAL NOTES:

1. THE DIMENSIONS SHOWN ARE NOMINAL (IN MILLIMETERS), U.N.O.
2. WELD SIZESHALL BE AISC MINIMUM OF 6 mm UNLESS NOTED OTHERWISE.
3. ALL FIELD WELDS SHALL BE INSPECTED PER QUALITY ASSURANCE AND SPECIAL INSPECTIONS.

REFERENCE DRAWINGS

1	93M-BOA-NAT-LOT-04833
2	93M-BOA-NAT-LOT-09170
3	93M-BOA-NAT-LOT-01976
4	93M-BOA-NAT-LOT-20021
5	
6	
7	
8	
9	

6TH OF OCTOBER CITY RAIL TRANSIT MONORAIL

The Authority | Consultant: Hill International | Main Contractor | Structural Designer

KEY PLAN:

SCALE	SHOP DRAWING	DATE
AS SHOWN		12/05/2023

REV.	DATE	DSN	CHK	APP.	AMENDMENTS	STATUS
B	12/05/2023	M.KH	M.KH	DR.M.M	ISSUED FOR INFORMATION	IFI

DRAWING TITLE

6TH OF OCTOBER MONORAIL SERVICE WALKWAYS ZONE (1008)
Z8-CHQ098

Project Code	Rubric	Initiator	Lot	Ref	Number	Revision
9 3 M	0 4 7 6	A C C	6 0 D E P	D W G	0 8 5 6 7	B

Tekla structures

All holes are 22mm U.N.O Length & Area & Weight per piece						
Z8-CHQ097	CHQD_PL5*917.1	S235JR	2	1170.0	2.17	42.0
Mark	Profile	Grade	QTY	Length	Area	Weight

approval is subject to approval of coordination package between multi-discipline

REVIEWED WITH COMMENT MONORAILS PROJECT

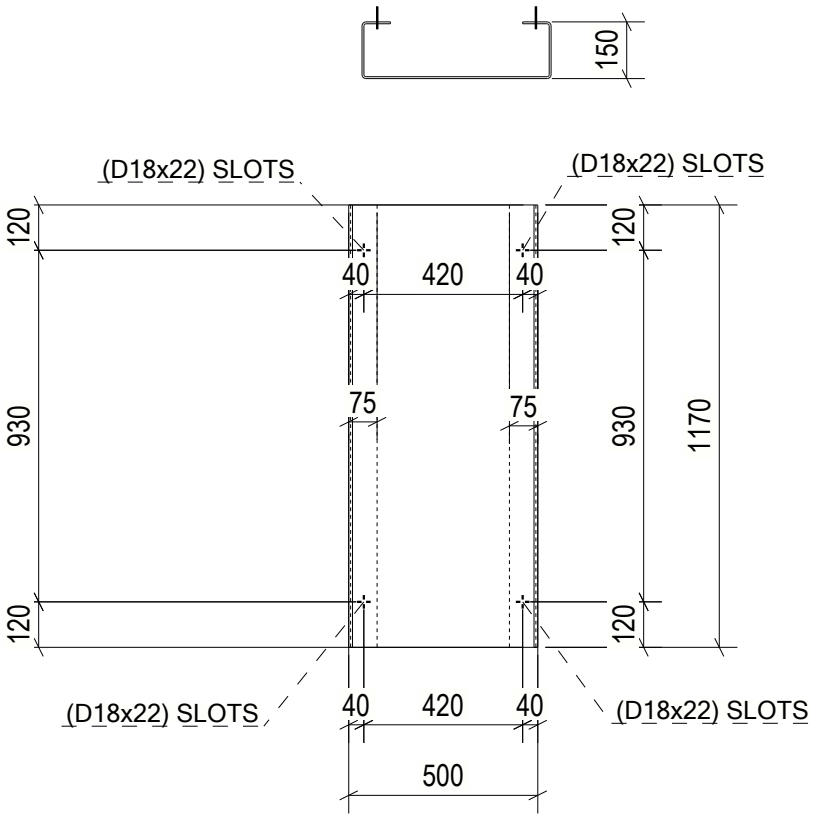

2 REQ'D AS DRAWN MK'D Z8-CHQ097

6 October Monorail Engineering Unit
Valid For Construction

GENERAL NOTES:

1. THE DIMENSIONS SHOWN ARE NOMINAL (IN MILLIMETERS), U.N.O.
2. WELD SIZESHALL BE AISC MINIMUM OF 6 mm UNLESS NOTED OTHERWISE.
3. ALL FIELD WELDS SHALL BE INSPECTED PER QUALITY ASSURANCE AND SPECIAL INSPECTIONS.

REFERENCE DRAWINGS

1	93M-BOA-NAT-LOT-04833
2	93M-BOA-NAT-LOT-09170
3	93M-BOA-NAT-LOT-01976
4	93M-BOA-NAT-LOT-20021
5	
6	
7	
8	
9	

6TH OF OCTOBER CITY RAIL TRANSIT MONORAIL

The Authority — Hill International Consultant — Main Contractor — Structural Designer

KEY PLAN:

SCALE	SHOPDRAWING	DATE
AS SHOWN		12/05/2023

REV	DATE	DSG	CHK	APP	AMENDMENTS	STATUS
B	12/05/2023	M.KH	M.KH	DR.M.M	ISSUED FOR INFORMATION	IFI
A	11/20/2022	M.KH	M.KH	DR.M.M	ISSUED FOR INFORMATION	IFI

DRAWING TITLE

6TH OF OCTOBER MONORAIL SERVICE WALKWAYS ZONE (1008)
Z8-CHQ097

Project Code	Rubric	Initiator	Lot	Ref	Number	Revision
9 3 M	0 4 7 6	A C C	6 0 D E P	D W G	0 8 5 6 8	B

Tekla structures

approval is subject to approval of coordination package between multi-discipline

REVIEWED WITH COMMENT
MONORAILS PROJECT

All holes are 22mm U.N.O Length & Area & Weight per piece

Mark	Profile	Grade	QTY	Length	Area	Weight
Z8-CHQ096	CHQD_PL5*917.1	S235JR	2	1500.0	2.77	53.9

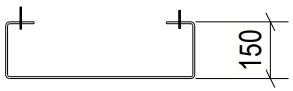

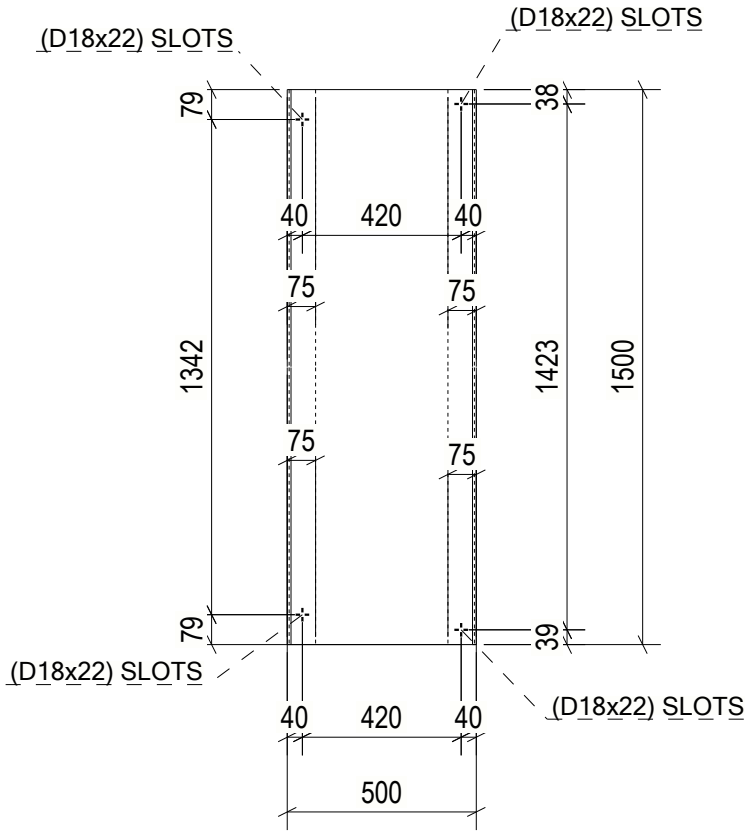

2 REQ'D AS DRAWN MK'D Z8-CHQ096

6 October Monorail Engineering Unit Valid For Construction

GENERAL NOTES:

1. THE DIMENSIONS SHOWN ARE NOMINAL (IN MILLIMETERS), U.N.O.
2. WELD SIZESHALL BE AISC MINIMUM OF 6 mm UNLESS NOTED OTHERWISE.
3. ALL FIELD WELDS SHALL BE INSPECTED PER QUALITY ASSURANCE AND SPECIAL INSPECTIONS.

REFERENCE DRAWINGS

1	93M-BOA-NAT-LOT-04833
2	93M-BOA-NAT-LOT-09170
3	93M-BOA-NAT-LOT-01976
4	93M-BOA-NAT-LOT-20021
5	
6	
7	
8	
9	

6TH OF OCTOBER CITY RAIL TRANSIT MONORAIL

The Authority | Hill International Consultant | Main Contractor | Structural Designer

KEY PLAN:

REV.	DATE	DSG	CHK	APP	AMENDMENTS	STATUS
B	12/05/2023	M.KH	M.KH	DR.BM	ISSUED FOR INFORMATION	IFI
A	11/20/2022	M.KH	M.KH	DR.BM	ISSUED FOR INFORMATION	IFI

SCALE AS SHOWN | SHOPDRAWING | DATE 12/05/2023

DRAWING TITLE
6TH OF OCTOBER MONORAIL
SERVICE WALKWAYS
ZONE (1008)
Z8-CHQ096

Project Code	Rubric	Initiator	Lot	Ref	Number	Revision
93M	476	ACC60	DEP	DWG	08569	B

Tekla structures

approval is subject to approval of coordination package between multi-discipline

REVIEWED WITH COMMENT
MONORAILS PROJECT

All holes are 22mm U.N.O Length & Area & Weight per piece

Mark	Profile	Grade	QTY	Length	Area	Weight
Z8-CHQ095	CHQD_PL5*917.1	S235JR	2	1500.0	2.77	53.9

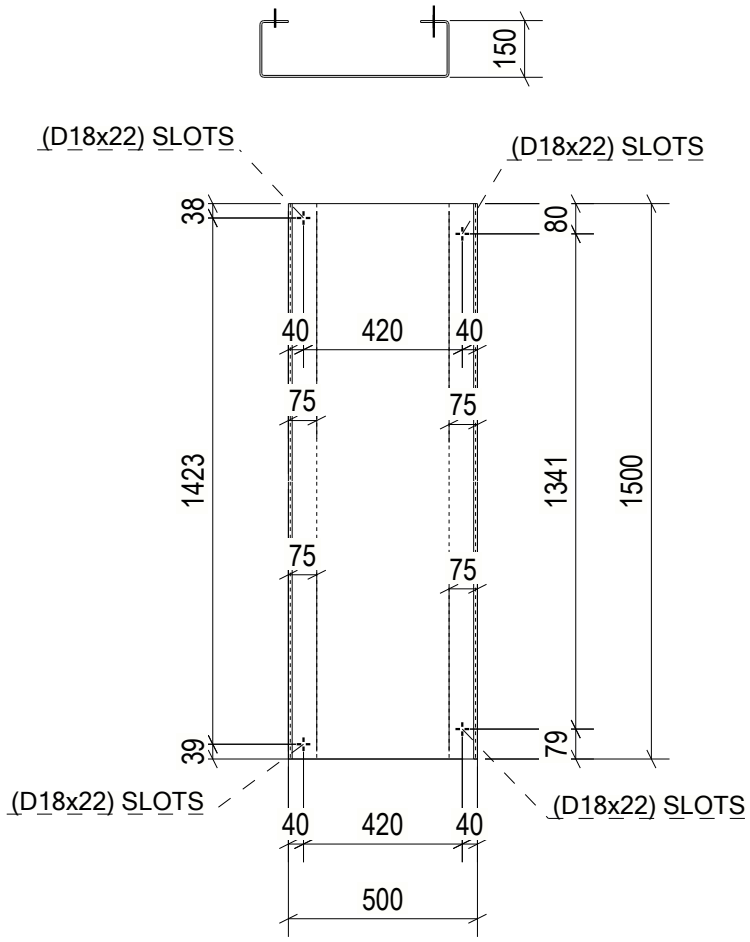

2 REQ'D AS DRAWN MK'D Z8-CHQ095

6 October Monorail
Engineering Unit
Valid For Construction

GENERAL NOTES:

1. THE DIMENSIONS SHOWN ARE NOMINAL (IN MILLIMETERS), U.N.O.
2. WELD SIZESHALL BE AISC MINIMUM OF 6 mm UNLESS NOTED OTHERWISE.
3. ALL FIELD WELDS SHALL BE INSPECTED PER QUALITY ASSURANCE AND SPECIAL INSPECTIONS.

REFERENCE DRAWINGS

1	93M-BOA-NAT-LOT-04833
2	93M-BOA-NAT-LOT-09170
3	93M-BOA-NAT-LOT-01976
4	93M-BOA-NAT-LOT-20021
5	
6	
7	
8	
9	

6TH OF OCTOBER CITY RAIL TRANSIT MONORAIL

The Authority | Hill International Consultant | Main Contractor | Structural Designer

KEY PLAN:

SCALE: AS SHOWN | SHOPDRAWING | DATE: 12/09/2023

REV.	DATE	DSG	CHK	APP	AMENDMENTS	STATUS
B	12/05/2023	M.KH	M.KH	DR.BM	ISSUED FOR INFORMATION	IFI
A	11/20/2022	M.KH	M.KH	DR.BM	ISSUED FOR INFORMATION	IFI

DRAWING TITLE
6TH OF OCTOBER MONORAIL
SERVICE WALKWAYS
ZONE (1008)
Z8-CHQ095

Project Code	Rubric	Initiator	Lot	Ref	Number	Revision
93M	476	ACC	60DEP	DWG	0857	B

Tekla structures

approval is subject to approval of coordination package between multi-discipline

REVIEWED WITH COMMENT
MONORAILS PROJECT

All holes are 22mm U.N.O Length & Area & Weight per piece						
Z8-CHQ094	CHQD_PL5*917.1	S235JR	1	1548.6	2.86	55.6
Mark	Profile	Grade	QTY	Length	Area	Weight

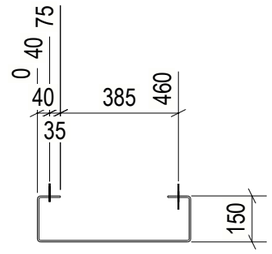

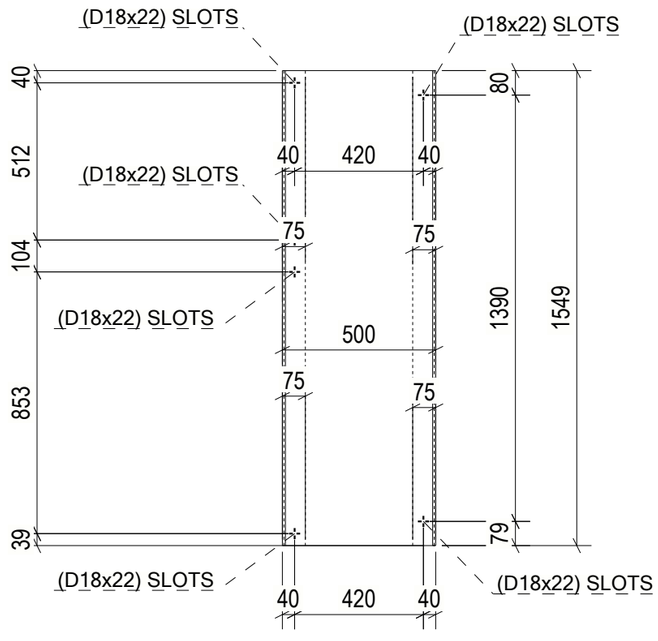

1 REQ'D AS DRAWN MK'D Z8-CHQ094

6 October Monorail
Engineering Unit
Valid For Construction

GENERAL NOTES:

1. THE DIMENSIONS SHOWN ARE NOMINAL (IN MILLIMETERS), U.N.O.
2. WELD SIZESHALL BE AISC MINIMUM OF 6 mm UNLESS NOTED OTHERWISE.
3. ALL FIELD WELDS SHALL BE INSPECTED PER QUALITY ASSURANCE AND SPECIAL INSPECTIONS.

REFERENCE DRAWINGS

1	93M-BOA-NAT-LOT-04833
2	93M-BOA-NAT-LOT-09170
3	93M-BOA-NAT-LOT-01976
4	93M-BOA-NAT-LOT-20021
5	
6	
7	
8	
9	

6TH OF OCTOBER CITY RAIL TRANSIT MONORAIL

The Authority | Hill International Consultant | Main Contractor | Structural Designer

KEY PLAN:

SCALE: AS SHOWN | SHOP DRAWING | DATE: 12/05/2023

REV	DATE	DRN	CHK	APP	AMENDMENT DESCRIPTION	STATUS
B	12/05/2023	M.KH	M.KH	DR.M.M	ISSUED FOR INFORMATION	IFI

DRAWING TITLE
6TH OF OCTOBER MONORAIL
SERVICE WALKWAYS
ZONE (1008)
Z8-CHQ094

Project Code	Rubric	Initiator	Lot	Ref	Number	Revision
9 3	M 0 4 7 6	A C C	6 0 D E P	D W G	0 8 5 7 1	B

Tekla structures

approval is subject to approval of coordination package between multi-discipline

REVIEWED WITH COMMENT
MONORAILS PROJECT

All holes are 22mm U.N.O Length & Area & Weight per piece

Mark	Profile	Grade	QTY	Length	Area	Weight
Z8-CHQ093	CHQD_PL5*917.1	S235JR	1	1100.0	2.04	39.5

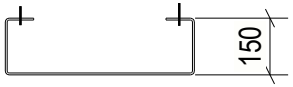

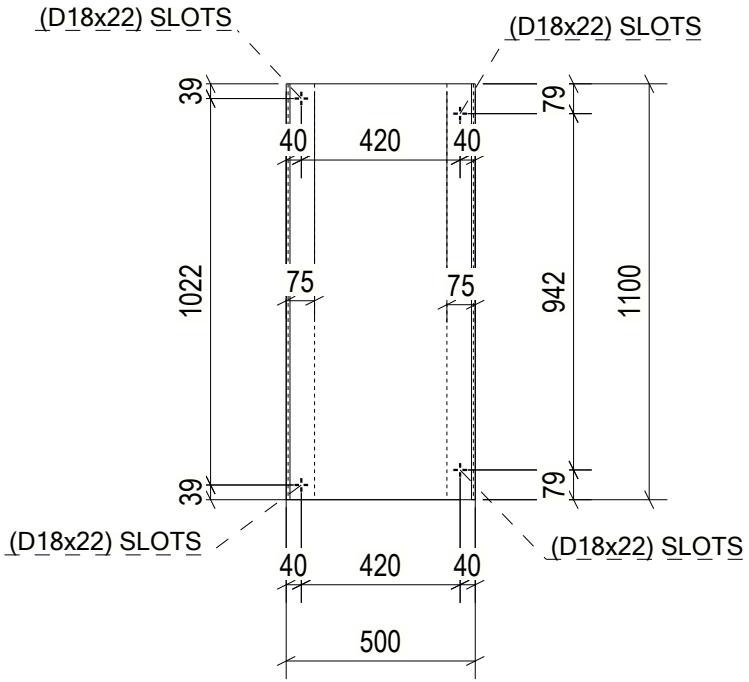

1 REQ'D AS DRAWN MK'D Z8-CHQ093

6 October Monorail
Engineering Unit
Valid For Construction

GENERAL NOTES:

1. THE DIMENSIONS SHOWN ARE NOMINAL (IN MILLIMETERS), U.N.O.
2. WELD SIZESHALL BE AISC MINIMUM OF 6 mm UNLESS NOTED OTHERWISE.
3. ALL FIELD WELDS SHALL BE INSPECTED PER QUALITY ASSURANCE AND SPECIAL INSPECTIONS.

REFERENCE DRAWINGS

1	93M-BOA-NAT-LOT-04833
2	93M-BOA-NAT-LOT-09170
3	93M-BOA-NAT-LOT-01976
4	93M-BOA-NAT-LOT-20021
5	
6	
7	
8	
9	

6TH OF OCTOBER CITY RAIL TRANSIT MONORAIL

The Authority | Hill International Consultant | Main Contractor | Structural Designer

KEY PLAN:

SCALE: AS SHOWN | SHOPDRAWING | DATE: 12/09/2023

REV.	DATE	DSG	CHK	APP	AMENDMENTS	STATUS
B	12/05/2023	M.KH	M.KH	DR.BM	ISSUED FOR INFORMATION	IFI
A	11/20/2022	M.KH	M.KH	DR.BM	ISSUED FOR INFORMATION	IFI

DRAWING TITLE

6TH OF OCTOBER MONORAIL
SERVICE WALKWAYS
ZONE (1008)
Z8-CHQ093

Project Code	Rubric	Initiator	Lot	Ref	Number	Revision
93M	047	6ACC	60DE	PDWG	0857	B

Tekla structures

approval is subject to approval of coordination package between multi-discipline

REVIEWED WITH COMMENT
MONORAILS PROJECT

All holes are 22mm U.N.O Length & Area & Weight per piece

Mark	Profile	Grade	QTY	Length	Area	Weight
Z8-CHQ092	CHQD_PL5*917.1	S235JR	1	1100.0	2.04	39.5

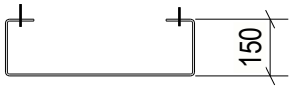

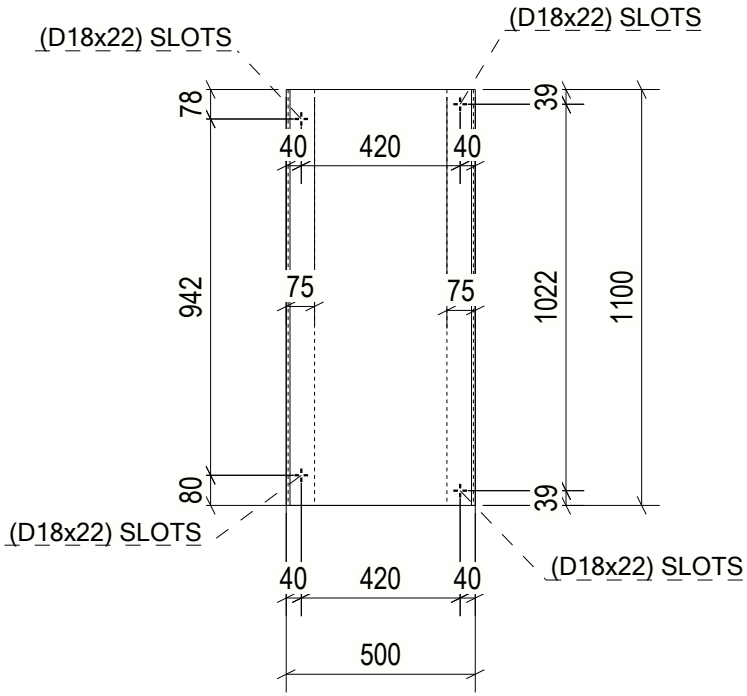

1 REQ'D AS DRAWN MK'D Z8-CHQ092

6 October Monorail
Engineering Unit
Valid For Construction

GENERAL NOTES:

1. THE DIMENSIONS SHOWN ARE NOMINAL (IN MILLIMETERS), U.N.O.
2. WELD SIZESHALL BE AISC MINIMUM OF 6 mm UNLESS NOTED OTHERWISE.
3. ALL FIELD WELDS SHALL BE INSPECTED PER QUALITY ASSURANCE AND SPECIAL INSPECTIONS.

REFERENCE DRAWINGS

1	93M-BOA-NAT-LOT-04833
2	93M-BOA-NAT-LOT-09170
3	93M-BOA-NAT-LOT-01976
4	93M-BOA-NAT-LOT-20021
5	
6	
7	
8	
9	

6TH OF OCTOBER CITY RAIL TRANSIT MONORAIL

The Authority | Hill International Consultant | Main Contractor | Structural Designer

KEY PLAN:

SCALE: AS SHOWN | SHOPDRAWING | DATE: 12/09/2023

REV.	DATE	DSG	CHK	APP	AMENDMENTS	STATUS
B	12/05/2023	M.KH	M.KH	DR.BIM	ISSUED FOR INFORMATION	IFI
A	11/20/2022	M.KH	M.KH	DR.BIM	ISSUED FOR INFORMATION	IFI

DRAWING TITLE
6TH OF OCTOBER MONORAIL
SERVICE WALKWAYS
ZONE (1008)
Z8-CHQ092

Project Code	Rubric	Initiator	Lot	Ref	Number	Revision
9 3 M	0 4 7 6	A C C	6 0 D E P	D W G	0 8 5 7 3	B

Tekla structures

approval is subject to approval of coordination package between multi-discipline

REVIEWED WITH COMMENT
MONORAILS PROJECT

All holes are 22mm U.N.O Length & Area & Weight per piece						
Z8-CHQ091	CHQD_PL5*917.1	S235JR	1	1548.6	2.86	55.6
Mark	Profile	Grade	QTY	Length	Area	Weight

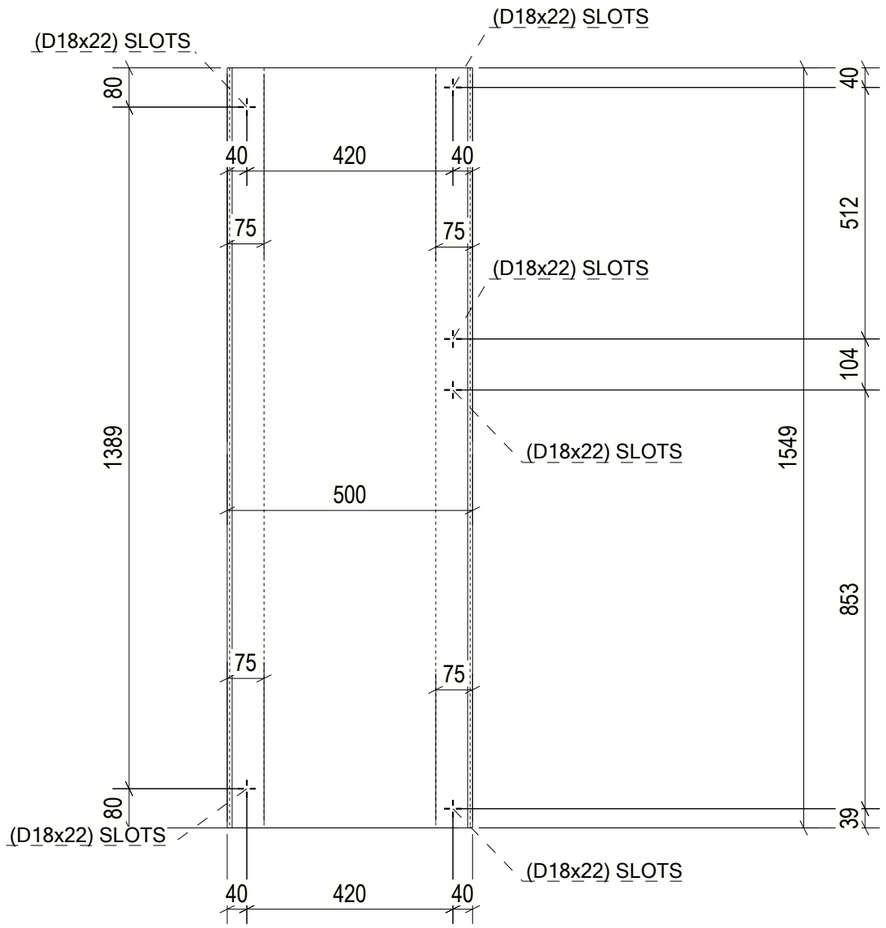

1 REQ'D AS DRAWN MK'D Z8-CHQ091

6 October Monorail
Engineering Unit
Valid For Construction

GENERAL NOTES:

1. THE DIMENSIONS SHOWN ARE NOMINAL (IN MILLIMETERS), U.N.O.
2. WELD SIZESHALL BE AISC MINIMUM OF 6 mm UNLESS NOTED OTHERWISE.
3. ALL FIELD WELDS SHALL BE INSPECTED PER QUALITY ASSURANCE AND SPECIAL INSPECTIONS.

REFERENCE DRAWINGS

1	93M-BOA-NAT-LOT-04833
2	93M-BOA-NAT-LOT-09170
3	93M-BOA-NAT-LOT-01976
4	93M-BOA-NAT-LOT-20021
5	
6	
7	
8	
9	

6TH OF OCTOBER CITY RAIL TRANSIT MONORAIL

The Authority | Consultant: Hill International | Main Contractor | Structural Designer

KEY PLAN:

SCALE	SHOP DRAWING	DATE
AS SHOWN		12/05/2023

REV	DATE	DSN	CHK	APP	AMENDMENT DESCRIPTION	STATUS
B	12/05/2023	M.KH	M.KH	DR.M.M	ISSUED FOR INFORMATION	IFI

DRAWING TITLE

6TH OF OCTOBER MONORAIL
SERVICE WALKWAYS
ZONE (1008)
Z8-CHQ091

Project Code	Rubric	Initiator	Lot	Ref	Number	Revision
9 3 M	0 4 7 6	A C C	6 0 D E P	D W G	0 8 5 7 4	B

Tekla structures

approval is subject to approval of coordination package between multi-discipline

REVIEWED WITH COMMENT
MONORAILS PROJECT

All holes are 22mm U.N.O Length & Area & Weight per piece						
Z8-CHQ090	CHQD_PL5*817.1	S235JR	1	1120.0	1.85	35.8
Mark	Profile	Grade	QTY	Length	Area	Weight

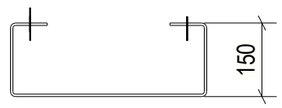

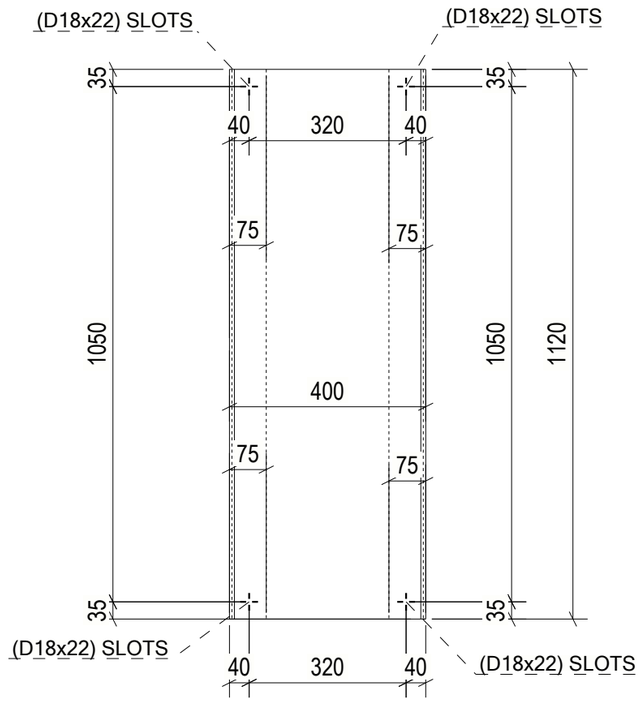

1 REQ'D AS DRAWN MK'D Z8-CHQ090

6 October Monorail
Engineering Unit
Valid For Construction

GENERAL NOTES:

1. THE DIMENSIONS SHOWN ARE NOMINAL (IN MILLIMETERS), U.N.O.
2. WELD SIZESHALL BE AISC MINIMUM OF 6 mm UNLESS NOTED OTHERWISE.
3. ALL FIELD WELDS SHALL BE INSPECTED PER QUALITY ASSURANCE AND SPECIAL INSPECTIONS.

REFERENCE DRAWINGS

1	93M-BOA-NAT-LOT-04833
2	93M-BOA-NAT-LOT-09170
3	93M-BOA-NAT-LOT-01976
4	93M-BOA-NAT-LOT-20021
5	
6	
7	
8	
9	

6TH OF OCTOBER CITY RAIL TRANSIT MONORAIL

The Authority | Consultant: Hill International | Main Contractor: ORASCOM CONSTRUCTION, BOMBARDIER | Structural Designer: INNOVA

KEY PLAN:

SCALE	SHOP DRAWING	DATE
AS SHOWN		12/05/2023

REV	DATE	DSN	CHK	APP	AMENDMENTS DESCRIPTION	STATUS
B	12/05/2023	M.KH	M.KH	DR.M.M	ISSUED FOR INFORMATION	IFI
A	17/4/2022	D.SH	CHK	APP	AMENDMENTS DESCRIPTION	STATUS

DRAWING TITLE

6TH OF OCTOBER MONORAIL
SERVICE WALKWAYS
ZONE (1008)
Z8-CHQ090

Project Code	Rubric	Initiator	Lot	Ref	Number	Revision
9 3	M 0 4 7 6	A C C	6 0 D E	P	D W G	0 8 5 7 5	B

Tekla structures

approval is subject to approval of coordination package between multi-discipline

REVIEWED WITH COMMENT
MONORAILS PROJECT

All holes are 22mm U.N.O Length & Area & Weight per piece						
Z8-CHQ089	CHQD_PL5*817.1	S235JR	1	1120.0	1.85	35.8
Mark	Profile	Grade	QTY	Length	Area	Weight

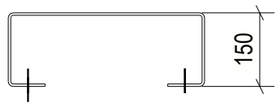

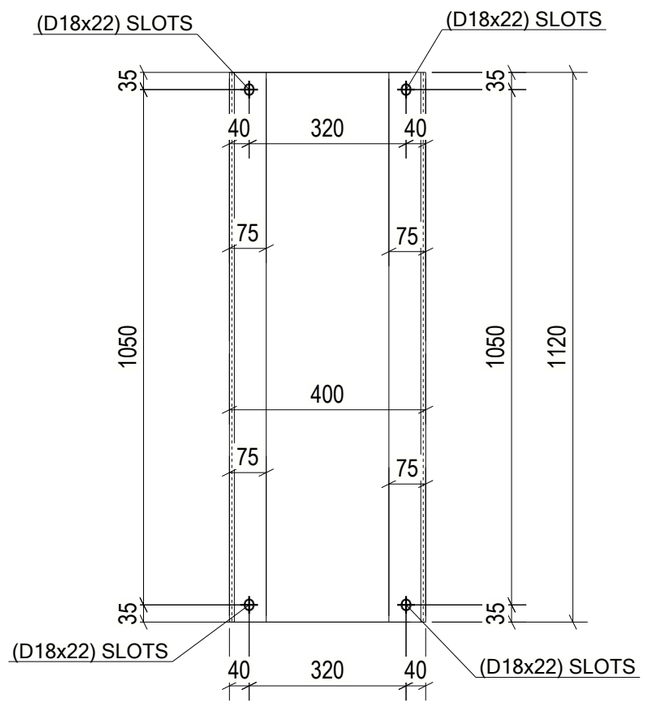

1 REQ'D AS DRAWN MK'D Z8-CHQ089

6 October Monorail Engineering Unit Valid For Construction

GENERAL NOTES:

1. THE DIMENSIONS SHOWN ARE NOMINAL (IN MILLIMETERS), U.N.O.
2. WELD SIZESHALL BE AISC MINIMUM OF 6 mm UNLESS NOTED OTHERWISE.
3. ALL FIELD WELDS SHALL BE INSPECTED PER QUALITY ASSURANCE AND SPECIAL INSPECTIONS.

REFERENCE DRAWINGS

1	93M-BOA-NAT-LOT-04833
2	93M-BOA-NAT-LOT-09170
3	93M-BOA-NAT-LOT-01976
4	93M-BOA-NAT-LOT-20021
5	
6	
7	
8	
9	

6TH OF OCTOBER CITY RAIL TRANSIT MONORAIL

The Authority | Hill International Consultant | Main Contractor | Structural Designer

KEY PLAN:

SCALE	SHOP DRAWING	DATE
AS SHOWN		12/05/2023

REV	DATE	DSN	CHK	APP	AMENDMENTS/DESCRIPTION	STATUS
B	12/05/2023	M.KH	M.KH	DR.M.M	ISSUED FOR INFORMATION	IFI
A	17/04/22	D.SS	CHK	APP	AMENDMENTS/DESCRIPTION	STATUS

DRAWING TITLE

6TH OF OCTOBER MONORAIL
SERVICE WALKWAYS
ZONE (1008)
Z8-CHQ089

Project Code	Rubric	Initiator	Lot	Ref	Number	Revision
9 3 M	0 4 7 6	A C C	6 0 D E	P	D W G	0 8 5 7 6	B

Tekla structures

approval is subject to approval of coordination package between multi-discipline

REVIEWED WITH COMMENT
MONORAILS PROJECT

All holes are 22mm U.N.O Length & Area & Weight per piece						
Z8-CHQ088	CHQD_PL5*917.1	S235JR	1	1544.2	2.82	54.7
Mark	Profile	Grade	QTY	Length	Area	Weight

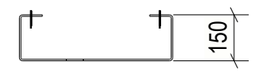

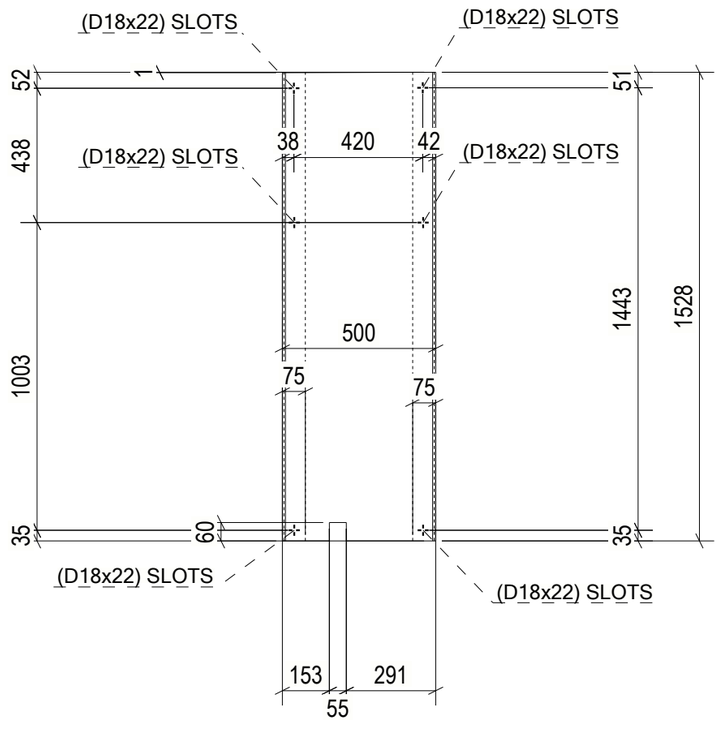

1 REQ'D AS DRAWN MK'D Z8-CHQ088

6 October Monorail Engineering Unit Valid For Construction

GENERAL NOTES:

1. THE DIMENSIONS SHOWN ARE NOMINAL (IN MILLIMETERS), U.N.O.
2. WELD SIZESHALL BE AISC MINIMUM OF 6 mm UNLESS NOTED OTHERWISE.
3. ALL FIELD WELDS SHALL BE INSPECTED PER QUALITY ASSURANCE AND SPECIAL INSPECTIONS.

REFERENCE DRAWINGS

1	93M-BOA-NAT-LOT-04833
2	93M-BOA-NAT-LOT-09170
3	93M-BOA-NAT-LOT-01976
4	93M-BOA-NAT-LOT-20021
5	
6	
7	
8	
9	

6TH OF OCTOBER CITY RAIL TRANSIT MONORAIL

The Authority | Hill International (Consultant) | ORASCOM BOMBARDIER (Main Contractor) | INNOVA (Structural Designer)

KEY PLAN:

SCALE	SHOP DRAWING	DATE
AS SHOWN		12/05/2023

REV.	DATE	DSN	CHK	APP.	AMENDMENTS DESCRIPTION	STATUS
B	12/05/2023	M.KH	M.KH	DR.M.M	ISSUED FOR INFORMATION	IFI

DRAWING TITLE

6TH OF OCTOBER MONORAIL SERVICE WALKWAYS ZONE (1008) Z8-CHQ088

Project Code	Rubric	Initiator	Lot	Ref	Number	Revision
9 3	M 0 4 7 6	A C C	6 0 D E P	D W G	0 8 5 7 7	B

Tekla structures

approval is subject to approval of coordination package between multi-discipline

REVIEWED WITH COMMENT
MONORAILS PROJECT

All holes are 22mm U.N.O Length & Area & Weight per piece						
Z8-CHQ087	CHQD_PL5*917.1	S235JR	1	1544.2	2.82	54.8
Mark	Profile	Grade	QTY	Length	Area	Weight

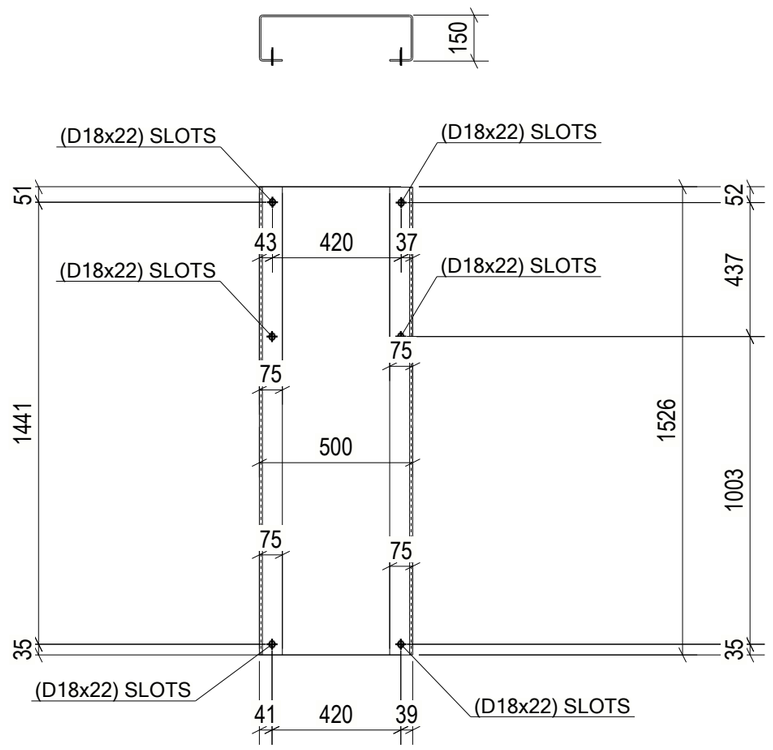

1 REQ'D AS DRAWN MK'D Z8-CHQ087

6 October Monorail Engineering Unit Valid For Construction

GENERAL NOTES:

1. THE DIMENSIONS SHOWN ARE NOMINAL (IN MILLIMETERS), U.N.O.
2. WELD SIZESHALL BE AISC MINIMUM OF 6 mm UNLESS NOTED OTHERWISE.
3. ALL FIELD WELDS SHALL BE INSPECTED PER QUALITY ASSURANCE AND SPECIAL INSPECTIONS.

REFERENCE DRAWINGS

1	93M-BOA-NAT-LOT-04833
2	93M-BOA-NAT-LOT-09170
3	93M-BOA-NAT-LOT-01976
4	93M-BOA-NAT-LOT-20021
5	
6	
7	
8	
9	

6TH OF OCTOBER CITY RAIL TRANSIT MONORAIL

The Authority | Hill International Consultant | Main Contractor | Structural Designer

KEY PLAN:

SCALE	SHOP DRAWING	DATE
AS SHOWN		12/05/2023

REV	DATE	DES.	CHK.	APP.	AMENDMENTS	STATUS
B	12/05/2023	M.KH	M.KH	DR.M.M	ISSUED FOR INFORMATION	IFI

DRAWING TITLE

6TH OF OCTOBER MONORAIL SERVICE WALKWAYS ZONE (1008) Z8-CHQ087

Project Code	Rubric	Initator	Lot	Ref	Number	Revision
93	M047	6ACC	60DEP	DWG	0857	B

Tekla structures

approval is subject to approval of coordination package between multi-discipline

REVIEWED WITH COMMENT
MONORAILS PROJECT

All holes are 22mm U.N.O Length & Area & Weight per piece						
Z8-CHQ086	CHQD_PL5*917.1	S235JR	2	1445.0	2.66	51.6
Mark	Profile	Grade	QTY	Length	Area	Weight

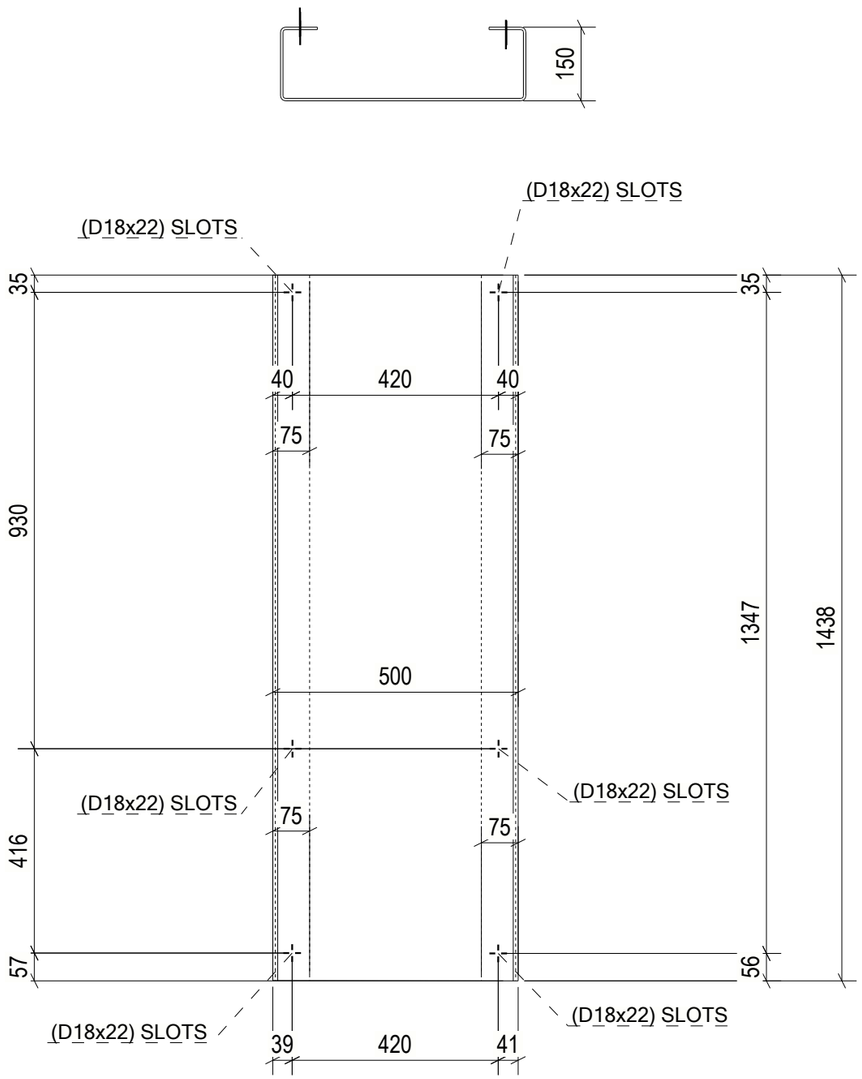

2 REQ'D AS DRAWN MK'D Z8-CHQ086

6 October Monorail Engineering Unit Valid For Construction

GENERAL NOTES:

1. THE DIMENSIONS SHOWN ARE NOMINAL (IN MILLIMETERS), U.N.O.
2. WELD SIZESHALL BE AISC MINIMUM OF 6 mm UNLESS NOTED OTHERWISE.
3. ALL FIELD WELDS SHALL BE INSPECTED PER QUALITY ASSURANCE AND SPECIAL INSPECTIONS.

REFERENCE DRAWINGS

1	93M-BOA-NAT-LOT-04833
2	93M-BOA-NAT-LOT-09170
3	93M-BOA-NAT-LOT-01976
4	93M-BOA-NAT-LOT-20021
5	
6	
7	
8	
9	

6TH OF OCTOBER CITY RAIL TRANSIT MONORAIL

The Authority | Hill International Consultant | Main Contractor | Structural Designer

KEY PLAN:

SCALE: AS SHOWN | SHOP DRAWING | DATE: 12/05/2023

REV	DATE	DRS	CHK	APP	AMENDMENTS	STATUS
B	12/05/2023	M.KH	M.KH	DR.M.M	ISSUED FOR INFORMATION	IFI

DRAWING TITLE

6TH OF OCTOBER MONORAIL
SERVICE WALKWAYS
ZONE (1008)
Z8-CHQ086

Project Code	Rubric	Initiator	Lot	Ref	Number	Revision
9 3 M	0 4 7 6	A C C	6 0 D E P	D W G	0 8 5 7 9	B

Tekla structures

approval is subject to approval of coordination package between multi-discipline

REVIEWED WITH COMMENT MONORAILS PROJECT

All holes are 22mm U.N.O Length & Area & Weight per piece						
Z8-CHQ085	CHQD_PL5*917.1	S235JR	1	2778.2	4.76	92.6
Mark	Profile	Grade	QTY	Length	Area	Weight

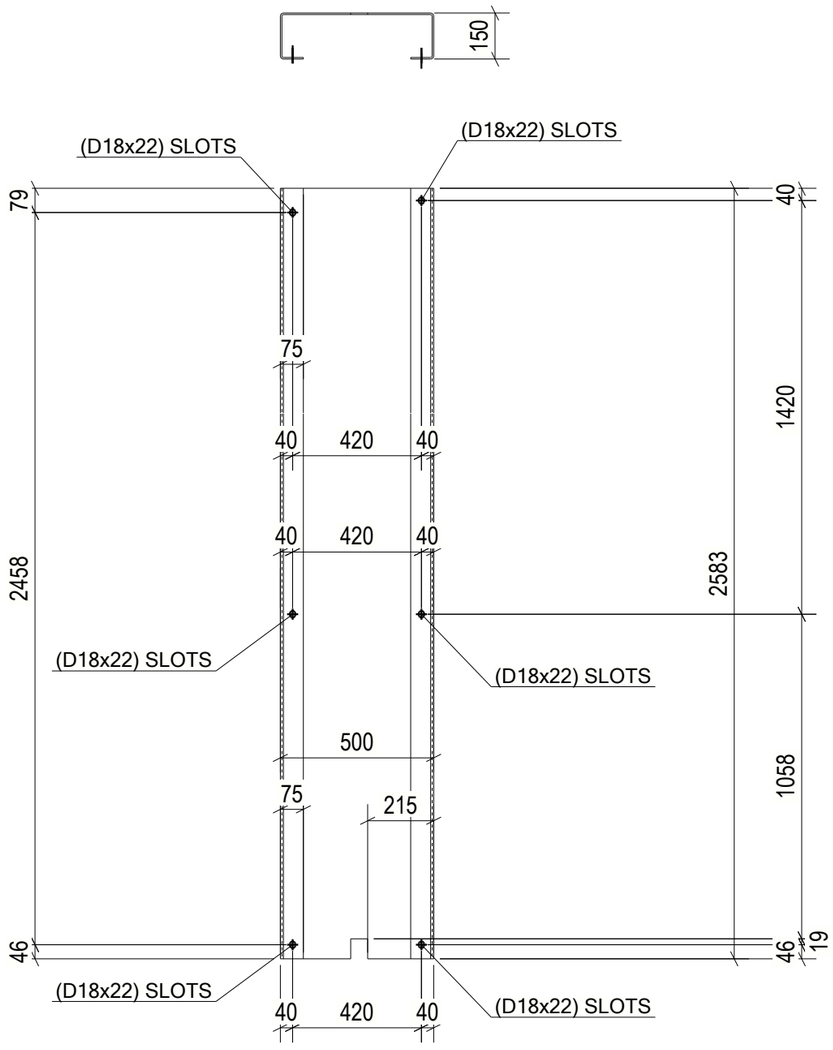

1 REQ'D AS DRAWN MK'D Z8-CHQ085

6 October Monorail Engineering Unit
Valid For Construction

GENERAL NOTES:

1. THE DIMENSIONS SHOWN ARE NOMINAL (IN MILLIMETERS), U.N.O.
2. WELD SIZESHALL BE AISC MINIMUM OF 6 mm UNLESS NOTED OTHERWISE.
3. ALL FIELD WELDS SHALL BE INSPECTED PER QUALITY ASSURANCE AND SPECIAL INSPECTIONS.

REFERENCE DRAWINGS

1	93M-BOA-NAT-LOT-04833
2	93M-BOA-NAT-LOT-09170
3	93M-BOA-NAT-LOT-01976
4	93M-BOA-NAT-LOT-20021
5	
6	
7	
8	
9	

6TH OF OCTOBER CITY RAIL TRANSIT MONORAIL

The Authority | Hill International Consultant | ORASCOM BOMBARDIER Main Contractor | INNOVA Structural Designer

KEY PLAN:

SCALE	SHOP DRAWING	DATE
AS SHOWN		12/05/2023

REV	DATE	DSN	CHK	APP	AMENDMENTS	STATUS
B	12/05/2023	M.KH	M.KH	DR.M.M	ISSUED FOR INFORMATION	IFI

DRAWING TITLE

6TH OF OCTOBER MONORAIL SERVICE WALKWAYS ZONE (1008)
Z8-CHQ085

Project Code	Rubric	Initiator	Lot	Ref	Number	Revision
93M	0476	ACC	60DEP	DWG	08580	B

Tekla structures

approval is subject to approval of coordination package between multi-discipline

REVIEWED WITH COMMENT
MONORAILS PROJECT

All holes are 22mm U.N.O Length & Area & Weight per piece						
Z8-CHQ084	CHQD_PL5*917.1	S235JR	1	2778.2	4.77	92.8
Mark	Profile	Grade	QTY	Length	Area	Weight

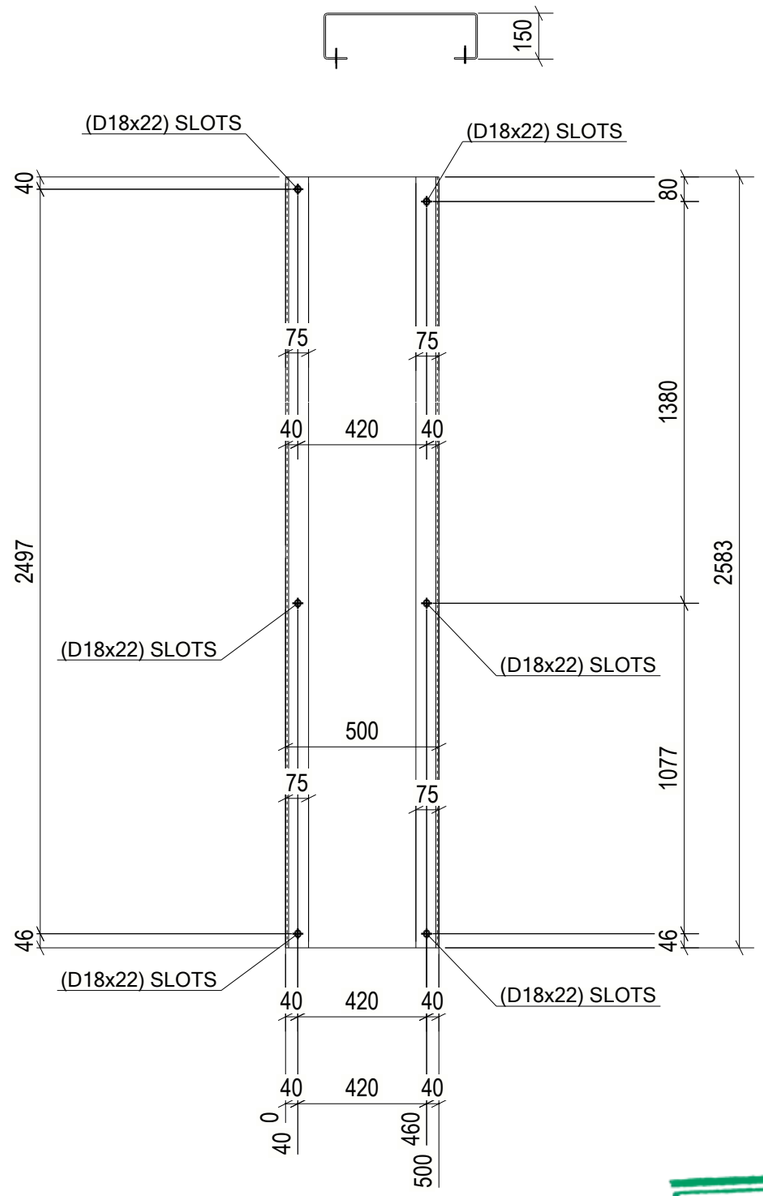

1 REQ'D AS DRAWN MK'D Z8-CHQ084

6 October Monorail Engineering Unit Valid For Construction

GENERAL NOTES:

1. THE DIMENSIONS SHOWN ARE NOMINAL (IN MILLIMETERS), U.N.O.
2. WELD SIZESHALL BE AISC MINIMUM OF 6 mm UNLESS NOTED OTHERWISE.
3. ALL FIELD WELDS SHALL BE INSPECTED PER QUALITY ASSURANCE AND SPECIAL INSPECTIONS.

REFERENCE DRAWINGS

1	93M-BOA-NAT-LOT-04833
2	93M-BOA-NAT-LOT-09170
3	93M-BOA-NAT-LOT-01976
4	93M-BOA-NAT-LOT-20021
5	
6	
7	
8	
9	

6TH OF OCTOBER CITY RAIL TRANSIT MONORAIL

The Authority | Consultant: Hill International | Main Contractor | Structural Designer

KEY PLAN:

SCALE: AS SHOWN | SHOP DRAWING | DATE: 12/05/2023

REV	DATE	DSN	CHK	APP	AMENDMENTS DESCRIPTION	STATUS
B	12/05/2023	M.KH	M.KH	DR.M.M	ISSUED FOR INFORMATION	IFI
A	17/04/22	D.SS	CHK	APP	AMENDMENTS DESCRIPTION	STATUS

DRAWING TITLE

6TH OF OCTOBER MONORAIL SERVICE WALKWAYS ZONE (1008)
Z8-CHQ084

Project Code	Rubric	Initiator	Lot	Ref	Number	Revision
9 3	M 0 4 7 6	A C C	6 0 D E P	D W G	0 8 5 8 1	B

Tekla structures

approval is subject to approval of coordination package between multi-discipline

REVIEWED WITH COMMENT
MONORAILS PROJECT

All holes are 22mm U.N.O Length & Area & Weight per piece						
Z8-CHQ083	CHQD_PL5*917.1	S235JR	1	1698.0	3.14	61.0
Mark	Profile	Grade	QTY	Length	Area	Weight

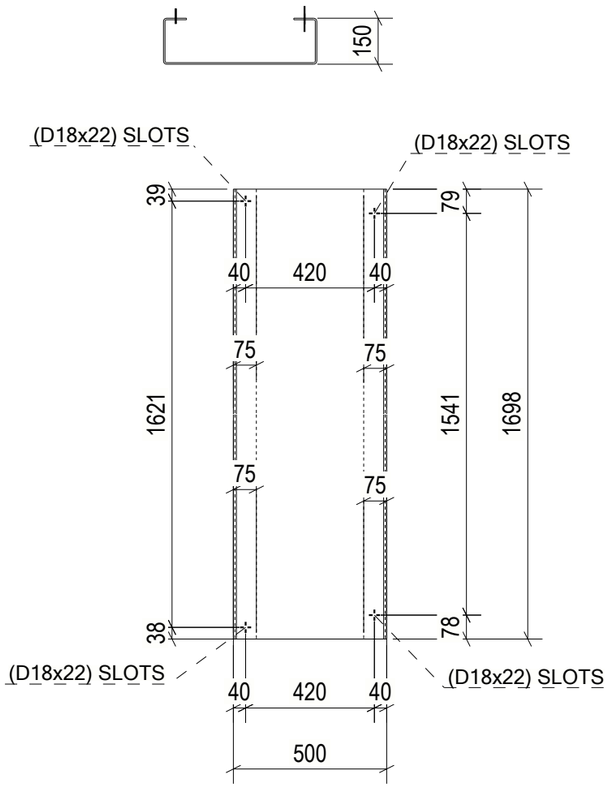

1 REQ'D AS DRAWN MK'D Z8-CHQ083

6 October Monorail
Engineering Unit
Valid For Construction

GENERAL NOTES:

1. THE DIMENSIONS SHOWN ARE NOMINAL (IN MILLIMETERS), U.N.O.
2. WELD SIZESHALL BE AISC MINIMUM OF 6 mm UNLESS NOTED OTHERWISE.
3. ALL FIELD WELDS SHALL BE INSPECTED PER QUALITY ASSURANCE AND SPECIAL INSPECTIONS.

REFERENCE DRAWINGS

1	93M-BOA-NAT-LOT-04833
2	93M-BOA-NAT-LOT-09170
3	93M-BOA-NAT-LOT-01976
4	93M-BOA-NAT-LOT-20021
5	
6	
7	
8	
9	

6TH OF OCTOBER CITY RAIL TRANSIT MONORAIL

The Authority | Hill International Consultant | Main Contractor | Structural Designer

KEY PLAN:

SCALE: AS SHOWN | SHOP DRAWING | DATE: 12/05/2023

REV	DATE	DSN	CHK	APP	AMENDMENT DESCRIPTION	STATUS
B	12/05/2023	M.KH	M.KH	DR.M.M	ISSUED FOR INFORMATION	IFI

DRAWING TITLE

6TH OF OCTOBER MONORAIL SERVICE WALKWAYS ZONE (1008)
Z8-CHQ083

Project Code	Rubric	Initiator	Lot	Ref	Number	Revision
9 3	M 0 4 7 6	A C C	6 0 D E P	D W G	0 8 5 8 2	B

Tekla structures

approval is subject to approval of coordination package between multi-discipline

REVIEWED WITH COMMENT
MONORAILS PROJECT

All holes are 22mm U.N.O Length & Area & Weight per piece						
Z8-CHQ082	CHQD_PL5*917.1	S235JR	1	1450.0	2.67	51.8
Mark	Profile	Grade	QTY	Length	Area	Weight

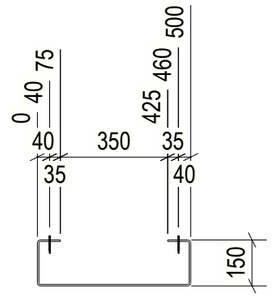

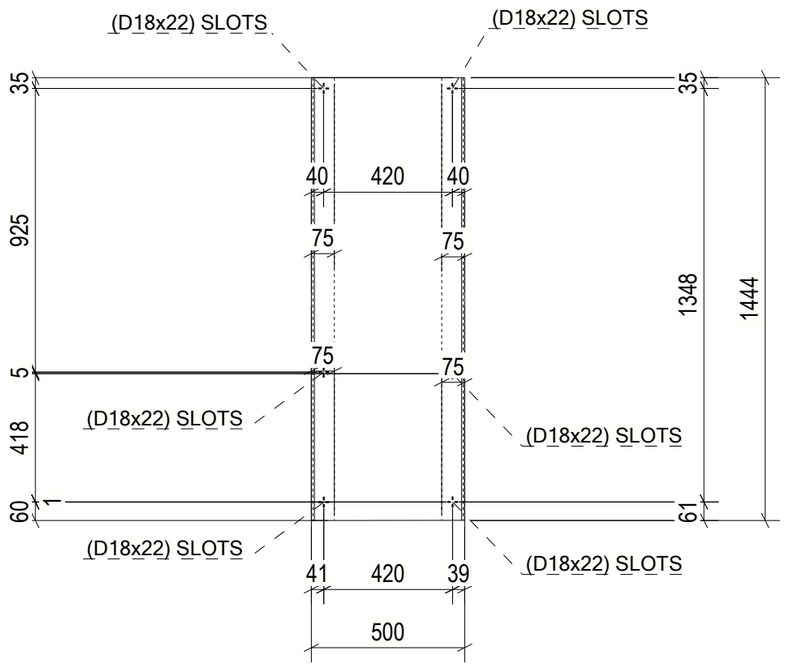

1 REQ'D AS DRAWN MK'D Z8-CHQ082

6 October Monorail
Engineering Unit
Valid For Construction

GENERAL NOTES:

1. THE DIMENSIONS SHOWN ARE NOMINAL (IN MILLIMETERS), U.N.O.
2. WELD SIZESHALL BE AISC MINIMUM OF 6 mm UNLESS NOTED OTHERWISE.
3. ALL FIELD WELDS SHALL BE INSPECTED PER QUALITY ASSURANCE AND SPECIAL INSPECTIONS.

REFERENCE DRAWINGS

1	93M-BOA-NAT-LOT-04833
2	93M-BOA-NAT-LOT-09170
3	93M-BOA-NAT-LOT-01976
4	93M-BOA-NAT-LOT-20021
5	
6	
7	
8	
9	

6TH OF OCTOBER CITY RAIL TRANSIT MONORAIL

The Authority | Consultant | Main Contractor | Structural Designer

KEY PLAN:

SCALE	SHOP DRAWING	DATE
AS SHOWN		12/05/2023

REV	DATE	DES.	CHK.	APP.	AMENDMENTS	STATUS
B	12/05/2023	M.KH	M.KH	DR.M.M	ISSUED FOR INFORMATION	IFI

DRAWING TITLE

6TH OF OCTOBER MONORAIL
SERVICE WALKWAYS
ZONE (1008)
Z8-CHQ082

Project Code	Rubric	Initiator	Lot	Ref	Number	Revision
9 3 M	0 4 7 6	A C C	6 0 D E P	D W G	0 8 5 8 3	B

Tekla structures

approval is subject to approval of coordination package between multi-discipline

REVIEWED WITH COMMENT
MONORAILS PROJECT

All holes are 22mm U.N.O Length & Area & Weight per piece						
Z8-CHQ081	CHQD_PL5*917.1	S235JR	1	1450.0	2.67	51.8
Mark	Profile	Grade	QTY	Length	Area	Weight

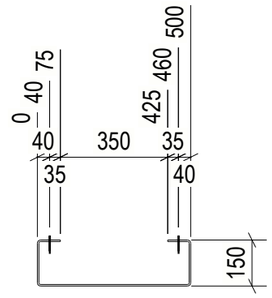

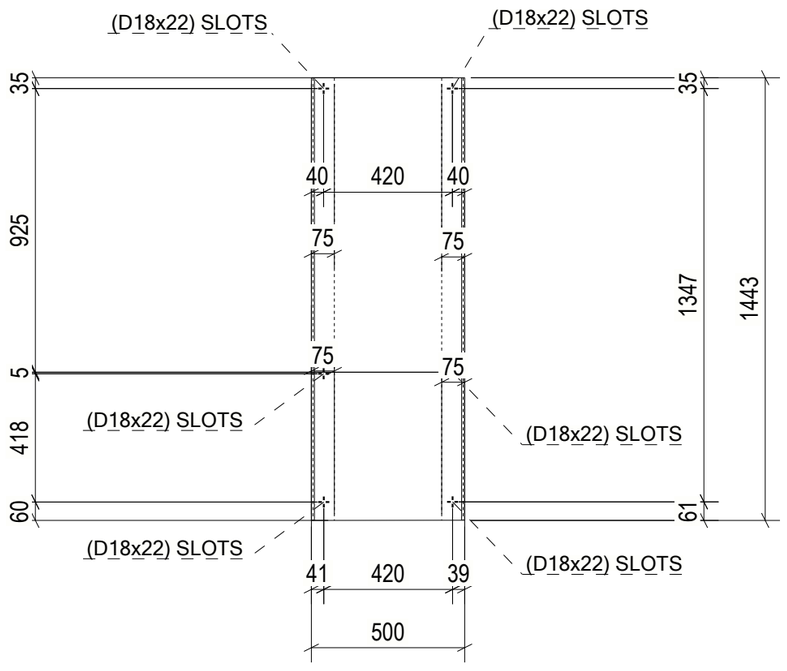

1 REQ'D AS DRAWN MK'D Z8-CHQ081

6 October Monorail
Engineering Unit
Valid For Construction

GENERAL NOTES:

1. THE DIMENSIONS SHOWN ARE NOMINAL (IN MILLIMETERS), U.N.O.
2. WELD SIZESHALL BE AISC MINIMUM OF 6 mm UNLESS NOTED OTHERWISE.
3. ALL FIELD WELDS SHALL BE INSPECTED PER QUALITY ASSURANCE AND SPECIAL INSPECTIONS.

REFERENCE DRAWINGS

1	93M-BOA-NAT-LOT-04833
2	93M-BOA-NAT-LOT-09170
3	93M-BOA-NAT-LOT-01976
4	93M-BOA-NAT-LOT-20021
5	
6	
7	
8	
9	

6TH OF OCTOBER CITY RAIL TRANSIT MONORAIL

The Authority — Hill International (Consultant) — Main Contractor — Structural Designer

KEY PLAN:

SCALE	SHOP DRAWING	DATE
AS SHOWN		12/05/2023

REV	DATE	DSN	CHK	APP	AMENDMENTS	STATUS
B	12/05/2023	M.KH	M.KH	DR.M.M	ISSUED FOR INFORMATION	IFI
A	12/05/2023	M.KH	M.KH	DR.M.M	ISSUED FOR INFORMATION	IFI

DRAWING TITLE
6TH OF OCTOBER MONORAIL
SERVICE WALKWAYS
ZONE (1008)
Z8-CHQ081

Project Code	Rubric	Initiator	Lot	Ref	Number	Revision
9 3 M	0 4 7 6	A C C	6 0 D E P	D W G	0 8 5 8 4	B

Tekla structures

approval is subject to approval of coordination package between multi-discipline

REVIEWED WITH COMMENT MONORAILS PROJECT

All holes are 22mm U.N.O Length & Area & Weight per piece						
Z8-CHQ080	CHQD_PL5*917.1	S235JR	1	1799.4	3.33	64.6
Mark	Profile	Grade	QTY	Length	Area	Weight

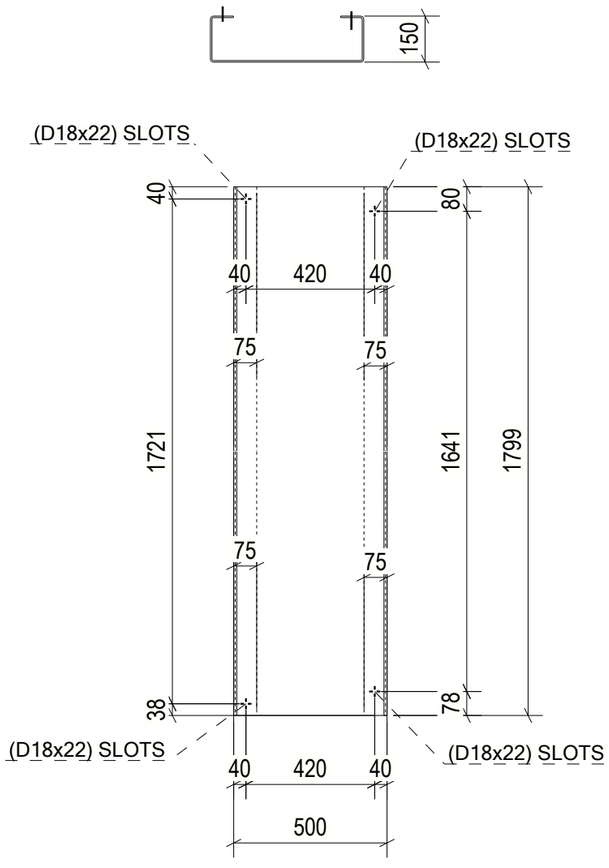

1 REQ'D AS DRAWN MK'D Z8-CHQ080

6 October Monorail Engineering Unit Valid For Construction

GENERAL NOTES:

1. THE DIMENSIONS SHOWN ARE NOMINAL (IN MILLIMETERS), U.N.O.
2. WELD SIZESHALL BE AISC MINIMUM OF 6 mm UNLESS NOTED OTHERWISE.
3. ALL FIELD WELDS SHALL BE INSPECTED PER QUALITY ASSURANCE AND SPECIAL INSPECTIONS.

REFERENCE DRAWINGS

1	93M-BOA-NAT-LOT-04833
2	93M-BOA-NAT-LOT-09170
3	93M-BOA-NAT-LOT-01976
4	93M-BOA-NAT-LOT-20021
5	
6	
7	
8	
9	

6TH OF OCTOBER CITY RAIL TRANSIT MONORAIL

The Authority | Hill International Consultant | ORASCOM BOMBARDIER Main Contractor | INNOVA Structural Designer

KEY PLAN:

SCALE	SHOP DRAWING	DATE
AS SHOWN		12/05/2023

REV	DATE	DSG	CHK	APP	AMENDMENTS	STATUS
B	12/05/2023	M.KH	M.KH	DR.M.M	ISSUED FOR INFORMATION	IFI

DRAWING TITLE

6TH OF OCTOBER MONORAIL SERVICE WALKWAYS ZONE (1008) Z8-CHQ080

Project Code	Rubric	Initiator	Lot	Ref	Number	Revision
93M	0476	ACC	60DEP	DWG	08585	B

Tekla structures

approval is subject to approval of coordination package between multi-discipline

REVIEWED WITH COMMENT
MONORAILS PROJECT

All holes are 22mm U.N.O Length & Area & Weight per piece

Mark	Profile	Grade	QTY	Length	Area	Weight
Z8-CHQ079	CHQD_PL5*917.1	S235JR	1	2778.2	5.13	99.8

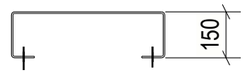

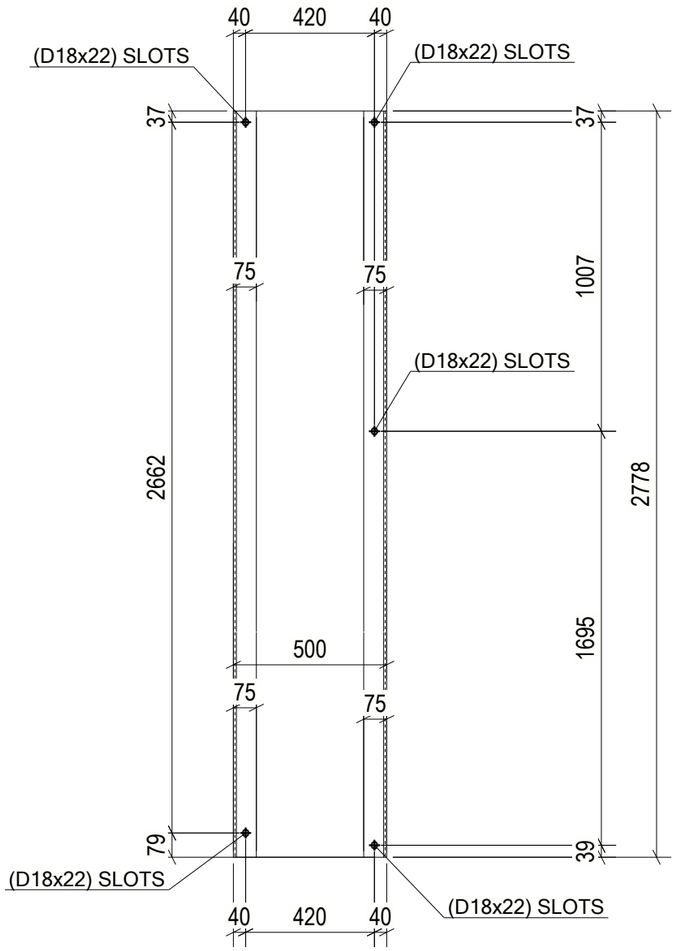

1 REQ'D AS DRAWN MK'D Z8-CHQ079

6 October Monorail Engineering Unit Valid For Construction

GENERAL NOTES:

1. THE DIMENSIONS SHOWN ARE NOMINAL (IN MILLIMETERS), U.N.O.
2. WELD SIZESHALL BE AISC MINIMUM OF 6 mm UNLESS NOTED OTHERWISE.
3. ALL FIELD WELDS SHALL BE INSPECTED PER QUALITY ASSURANCE AND SPECIAL INSPECTIONS.

REFERENCE DRAWINGS

1	93M-BOA-NAT-LOT-04833
2	93M-BOA-NAT-LOT-09170
3	93M-BOA-NAT-LOT-01976
4	93M-BOA-NAT-LOT-20021
5	
6	
7	
8	
9	

6TH OF OCTOBER CITY RAIL TRANSIT MONORAIL

The Authority | Consultant: Hill International | Main Contractor: ORASCOM CONSTRUCTION / BOMBARDIER | Structural Designer: INNOVA

KEY PLAN:

SCALE	SHOP DRAWING	DATE
AS SHOWN		12/05/2023

REV	DATE	DSN	CHK	APP	AMENDMENTS	STATUS
B	12/05/2023	M.KH	M.KH	DR.M.M	ISSUED FOR INFORMATION	IFI

DRAWING TITLE

6TH OF OCTOBER MONORAIL
SERVICE WALKWAYS
ZONE (1008)
Z8-CHQ079

Project Code	Rubric	Initiator	Lot	Ref	Number	Revision
9 3 M	0 4 7 6	A C C	6 0 D E P	D W G	0 8 5 8 6	B

Tekla structures

approval is subject to approval of coordination package between multi-discipline

REVIEWED WITH COMMENT
MONORAILS PROJECT

All holes are 22mm U.N.O Length & Area & Weight per piece						
Z8-CHQ078	CHQD_PL5*917.1	S235JR	1	1799.4	3.33	64.6
Mark	Profile	Grade	QTY	Length	Area	Weight

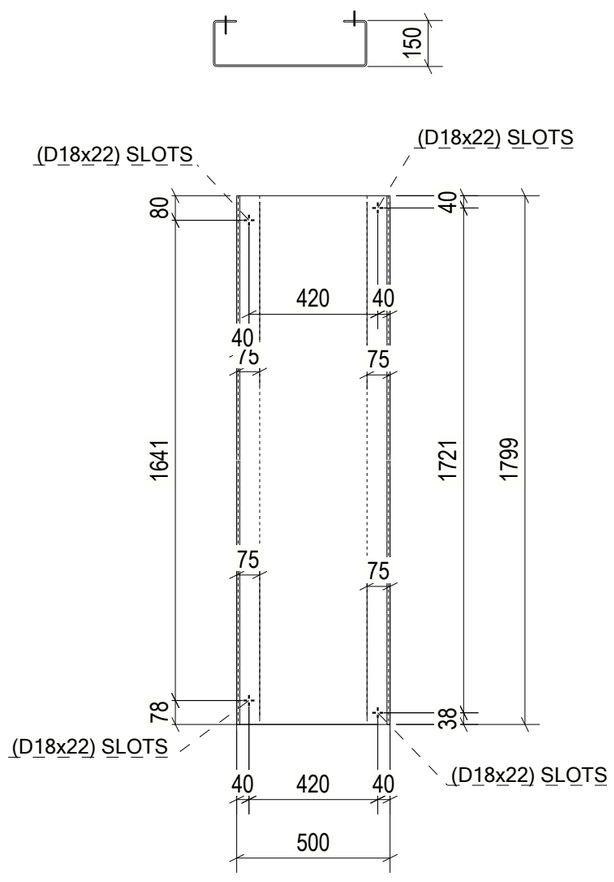

1 REQ'D AS DRAWN MK'D Z8-CHQ078

6 October Monorail
Engineering Unit
Valid For Construction

GENERAL NOTES:

1. THE DIMENSIONS SHOWN ARE NOMINAL (IN MILLIMETERS), U.N.O.
2. WELD SIZESHALL BE AISC MINIMUM OF 6 mm UNLESS NOTED OTHERWISE.
3. ALL FIELD WELDS SHALL BE INSPECTED PER QUALITY ASSURANCE AND SPECIAL INSPECTIONS.

REFERENCE DRAWINGS

1	93M-BOA-NAT-LOT-04833
2	93M-BOA-NAT-LOT-09170
3	93M-BOA-NAT-LOT-01976
4	93M-BOA-NAT-LOT-20021
5	
6	
7	
8	
9	

6TH OF OCTOBER CITY RAIL TRANSIT MONORAIL

The Authority | Consultant: Hill International | Main Contractor: ORASCOM CONSTRUCTION, BOMBARDIER | Structural Designer: INNOVA TRANSPORTATION

KEY PLAN:

SCALE	SHOP DRAWING	DATE
AS SHOWN		12/05/2023

REV	DATE	DES.	CHK.	APP.	AMENDMENTS	STATUS
B	12/05/2023	M.KH	M.KH	DR.M.M	ISSUED FOR INFORMATION	IFI

DRAWING TITLE
6TH OF OCTOBER MONORAIL
SERVICE WALKWAYS
ZONE (1008)
Z8-CHQ078

Project Code	Rubric	Initiator	Lot	Ref	Number	Revision
93M	047	ACC	60	DEP	DWG	08587	B

Tekla structures

approval is subject to approval of coordination package between multi-discipline

REVIEWED WITH COMMENT
MONORAILS PROJECT

All holes are 22mm U.N.O Length & Area & Weight per piece						
Z8-CHQ077	CHQD_PL5*917.1	S235JR	1	1698.0	3.14	61.0
Mark	Profile	Grade	QTY	Length	Area	Weight

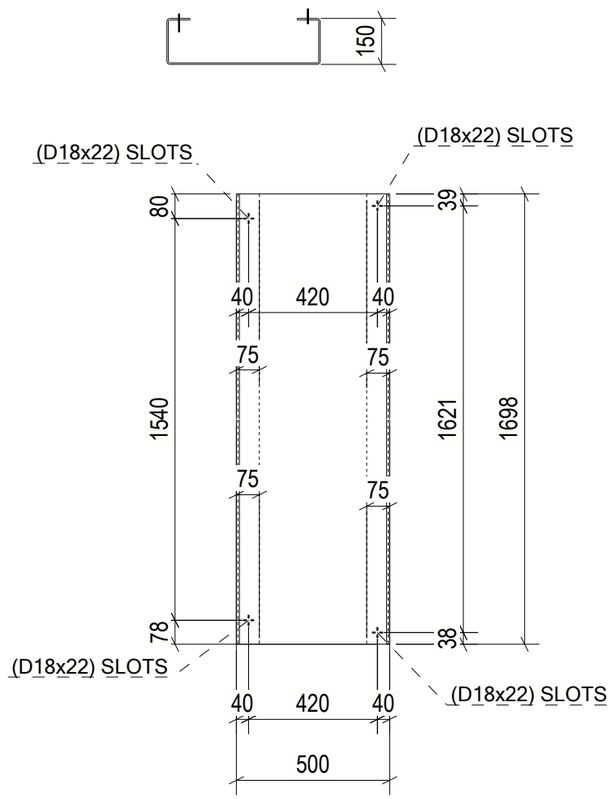

1 REQ'D AS DRAWN MK'D Z8-CHQ077

6 October Monorail
Engineering Unit
Valid For Construction

GENERAL NOTES:

1. THE DIMENSIONS SHOWN ARE NOMINAL (IN MILLIMETERS), U.N.O.
2. WELD SIZESHALL BE AISC MINIMUM OF 6 mm UNLESS NOTED OTHERWISE.
3. ALL FIELD WELDS SHALL BE INSPECTED PER QUALITY ASSURANCE AND SPECIAL INSPECTIONS.

REFERENCE DRAWINGS

1	93M-BOA-NAT-LOT-04833
2	93M-BOA-NAT-LOT-09170
3	93M-BOA-NAT-LOT-01976
4	93M-BOA-NAT-LOT-20021
5	
6	
7	
8	
9	

6TH OF OCTOBER CITY RAIL TRANSIT MONORAIL

The Authority | Hill International Consultant | Main Contractor | Structural Designer

KEY PLAN:

SCALE	SHOP DRAWING	DATE
AS SHOWN		12/05/2023

REV	DATE	DSN	CHK	APP	AMENDMENT DESCRIPTION	STATUS
B	12/05/2023	M.KH	M.KH	DR.M.M	ISSUED FOR INFORMATION	IFI

DRAWING TITLE

6TH OF OCTOBER MONORAIL
SERVICE WALKWAYS
ZONE (1008)
Z8-CHQ077

Project Code	Rubric	Initiator	Lot	Ref	Number	Revision
9 3	M 0 4 7 6	A C C	6 0 D E P	D W G	0 8 5 8 8	B

Tekla structures

approval is subject to approval of coordination package between multi-discipline

REVIEWED WITH COMMENT
MONORAILS PROJECT

All holes are 22mm U.N.O Length & Area & Weight per piece						
Z8-CHQ076	CHQD_PL5*917.1	S235JR	1	2778.2	5.12	99.6
Mark	Profile	Grade	QTY	Length	Area	Weight

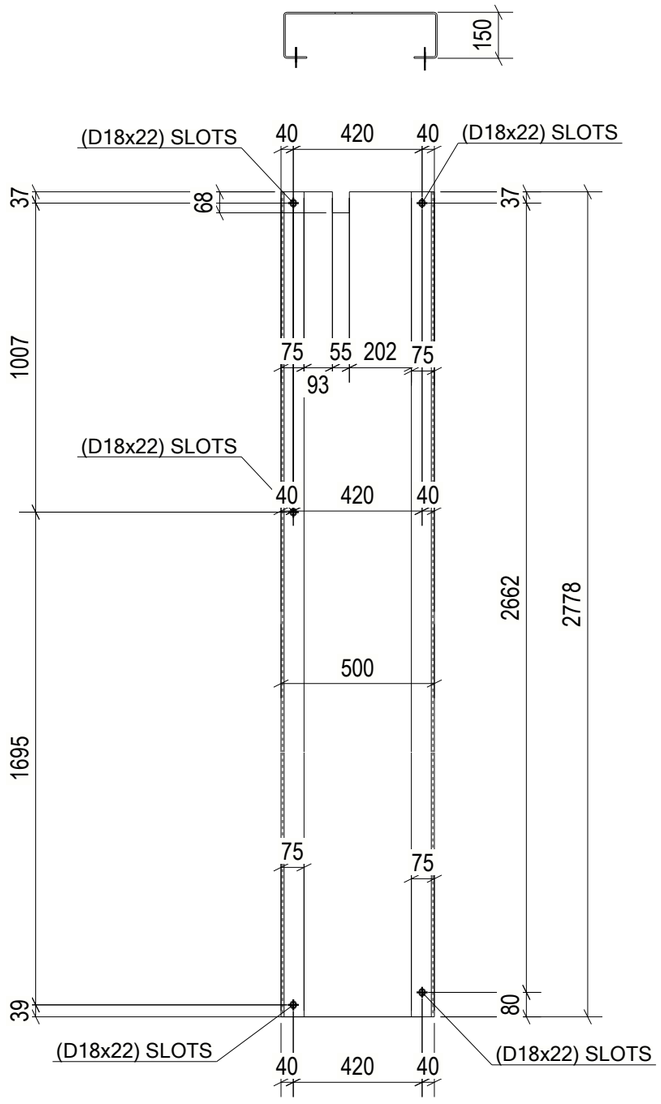

1 REQ'D AS DRAWN MK'D Z8-CHQ076

6 October Monorail Engineering Unit Valid For Construction

GENERAL NOTES:

1. THE DIMENSIONS SHOWN ARE NOMINAL (IN MILLIMETERS), U.N.O.
2. WELD SIZESHALL BE AISC MINIMUM OF 6 mm UNLESS NOTED OTHERWISE.
3. ALL FIELD WELDS SHALL BE INSPECTED PER QUALITY ASSURANCE AND SPECIAL INSPECTIONS.

REFERENCE DRAWINGS

1	93M-BOA-NAT-LOT-04833
2	93M-BOA-NAT-LOT-09170
3	93M-BOA-NAT-LOT-01976
4	93M-BOA-NAT-LOT-20021
5	
6	
7	
8	
9	

6TH OF OCTOBER CITY RAIL TRANSIT MONORAIL

The Authority | Hill International Consultant | Main Contractor | Structural Designer

KEY PLAN:

SCALE	SHOP DRAWING	DATE
AS SHOWN		12/05/2023

REV	DATE	DSN	CHK	APP	AMENDMENTS	STATUS
B	12/05/2023	M.KH	M.KH	DR.M.M	ISSUED FOR INFORMATION	IFI

DRAWING TITLE

6TH OF OCTOBER MONORAIL SERVICE WALKWAYS ZONE (1008) Z8-CHQ076

Project Code	Rubric	Initiator	Lot	Ref	Number	Revision
9 3	M 0 4 7 6	A C C	6 0 D E P	D W G	0 8 5 8 9	B

Tekla structures

approval is subject to approval of coordination package between multi-discipline

REVIEWED WITH COMMENT
MONORAILS PROJECT

All holes are 22mm U.N.O Length & Area & Weight per piece						
Z8-CHQ075	CHQD_PL5*817.1	S235JR	1	1120.0	1.85	35.8
Mark	Profile	Grade	QTY	Length	Area	Weight

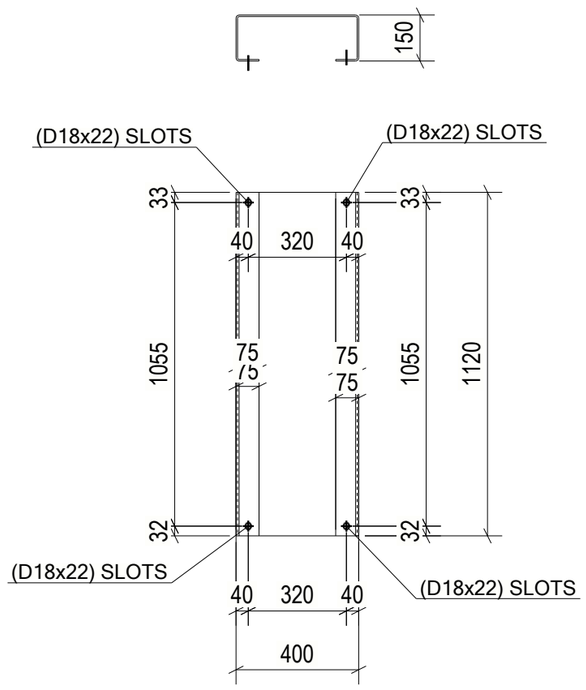

1 REQ'D AS DRAWN MK'D Z8-CHQ075

6 October Monorail
Engineering Unit
Valid For Construction

GENERAL NOTES:

1. THE DIMENSIONS SHOWN ARE NOMINAL (IN MILLIMETERS), U.N.O.
2. WELD SIZESHALL BE AISC MINIMUM OF 6 mm UNLESS NOTED OTHERWISE.
3. ALL FIELD WELDS SHALL BE INSPECTED PER QUALITY ASSURANCE AND SPECIAL INSPECTIONS.

REFERENCE DRAWINGS

1	93M-BOA-NAT-LOT-04833
2	93M-BOA-NAT-LOT-09170
3	93M-BOA-NAT-LOT-01976
4	93M-BOA-NAT-LOT-20021
5	
6	
7	
8	
9	

6TH OF OCTOBER CITY RAIL TRANSIT MONORAIL

The Authority — Hill International Consultant — Main Contractor — Structural Designer

KEY PLAN:

SCALE	SHOP DRAWING	DATE
AS SHOWN		12/05/2023

REV	DATE	DES.	CHK.	APP.	AMENDMENTS	STATUS
B	12/05/2023	M.KH	M.KH	DR.M.M	ISSUED FOR INFORMATION	IFI

DRAWING TITLE
6TH OF OCTOBER MONORAIL
SERVICE WALKWAYS
ZONE (1008)
Z8-CHQ075

Project Code	Rubric	Initiator	Lot	Ref	Number	Revision
9 3 M	0 4 7 6	A C C	6 0 D E P	D W G	0 8 5 9 0	B

Tekla structures

approval is subject to approval of coordination package between multi-discipline

REVIEWED WITH COMMENT
MONORAILS PROJECT

All holes are 22mm U.N.O Length & Area & Weight per piece						
Z8-CHQ074	CHQD_PL5*817.1	S235JR	3	1120.0	1.85	35.8
Mark	Profile	Grade	QTY	Length	Area	Weight

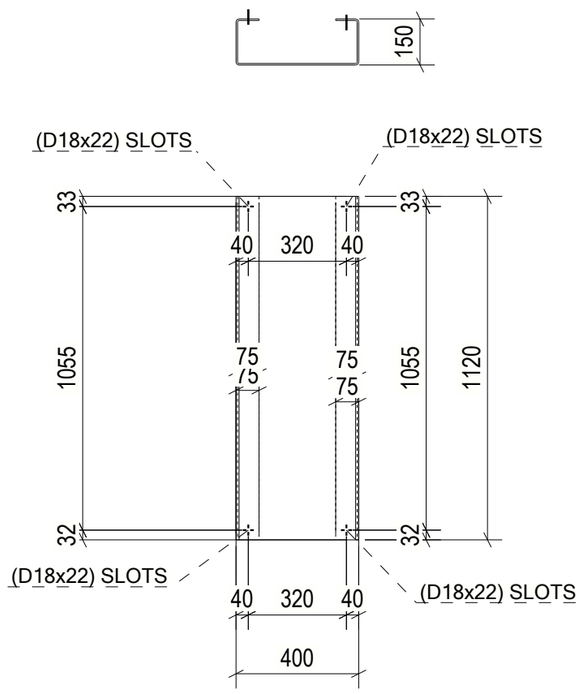

3 REQ'D AS DRAWN MK'D Z8-CHQ074

6 October Monorail
Engineering Unit
Valid For Construction

GENERAL NOTES:

1. THE DIMENSIONS SHOWN ARE NOMINAL (IN MILLIMETERS), U.N.O.
2. WELD SIZESHALL BE AISC MINIMUM OF 6 mm UNLESS NOTED OTHERWISE.
3. ALL FIELD WELDS SHALL BE INSPECTED PER QUALITY ASSURANCE AND SPECIAL INSPECTIONS.

REFERENCE DRAWINGS

1	93M-BOA-NAT-LOT-04833
2	93M-BOA-NAT-LOT-09170
3	93M-BOA-NAT-LOT-01976
4	93M-BOA-NAT-LOT-20021
5	
6	
7	
8	
9	

6TH OF OCTOBER CITY RAIL TRANSIT MONORAIL

The Authority — Hill International (Consultant) — Main Contractor — Structural Designer

KEY PLAN:

SCALE	SHOP DRAWING	DATE
AS SHOWN		12/05/2023

REV	DATE	DES.	CHK.	APP.	AMENDMENTS	STATUS
B	12/05/2023	M.KH	M.KH	DR.M.M	ISSUED FOR INFORMATION	IFI
A	12/05/2023	M.KH	M.KH	DR.M.M	ISSUED FOR INFORMATION	IFI

DRAWING TITLE
6TH OF OCTOBER MONORAIL
SERVICE WALKWAYS
ZONE (1008)
Z8-CHQ074

Project Code	Rubric	Initiator	Lot	Ref	Number	Revision
9 3 M	0 4 7 6	A C C	6 0 D E	P D W G	0 8 5 9 1	B

Tekla structures

approval is subject to approval of coordination package between multi-discipline

REVIEWED WITH COMMENT MONORAILS PROJECT

All holes are 22mm U.N.O Length & Area & Weight per piece						
Z8-CHQ073	CHQD5*1103.4	S235JR	1	1549.8	3.22	62.6
Mark	Profile	Grade	QTY	Length	Area	Weight

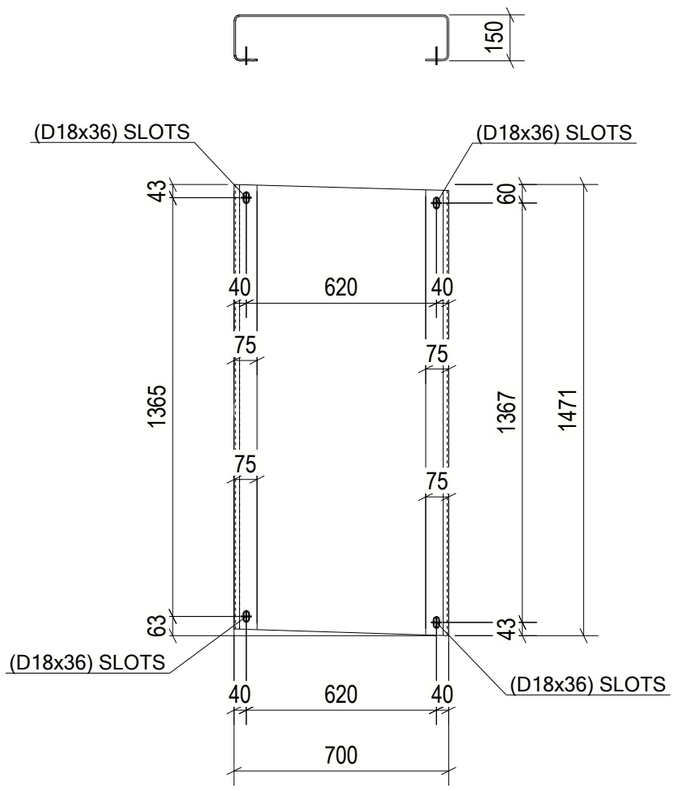

1 REQ'D AS DRAWN MK'D Z8-CHQ073

6 October Monorail Engineering Unit
Valid For Construction

GENERAL NOTES:

1. THE DIMENSIONS SHOWN ARE NOMINAL (IN MILLIMETERS), U.N.O.
2. WELD SIZESHALL BE AISC MINIMUM OF 6 mm UNLESS NOTED OTHERWISE.
3. ALL FIELD WELDS SHALL BE INSPECTED PER QUALITY ASSURANCE AND SPECIAL INSPECTIONS.

REFERENCE DRAWINGS

1	93M-BOA-NAT-LOT-04833
2	93M-BOA-NAT-LOT-09170
3	93M-BOA-NAT-LOT-01976
4	93M-BOA-NAT-LOT-20021
5	
6	
7	
8	
9	

6TH OF OCTOBER CITY RAIL TRANSIT MONORAIL

The Authority | Hill International Consultant | ORASCOM BOMBARDIER Main Contractor | INNOVA Structural Designer

KEY PLAN:

SCALE	SHOP DRAWING	DATE
AS SHOWN		12/05/2023

REV	DATE	DSG	CHK	APP	AMENDMENTS	STATUS
B	12/05/2023	M.KH	M.KH	DR.M.M	ISSUED FOR INFORMATION	IFI

DRAWING TITLE

6TH OF OCTOBER MONORAIL SERVICE WALKWAYS ZONE (1008)
Z8-CHQ073

Project Code	Rubric	Initiator	Lot	Ref	Number	Revision
93M	0476	ACC	60DEP	DWG	08592	B

Tekla structures

approval is subject to approval of coordination package between multi-discipline

REVIEWED WITH COMMENT
MONORAILS PROJECT

All holes are 22mm U.N.O Length & Area & Weight per piece						
Z8-CHQ072	CHQD5*1103.4	S235JR	1	3078.5	6.61	128.6
Mark	Profile	Grade	QTY	Length	Area	Weight

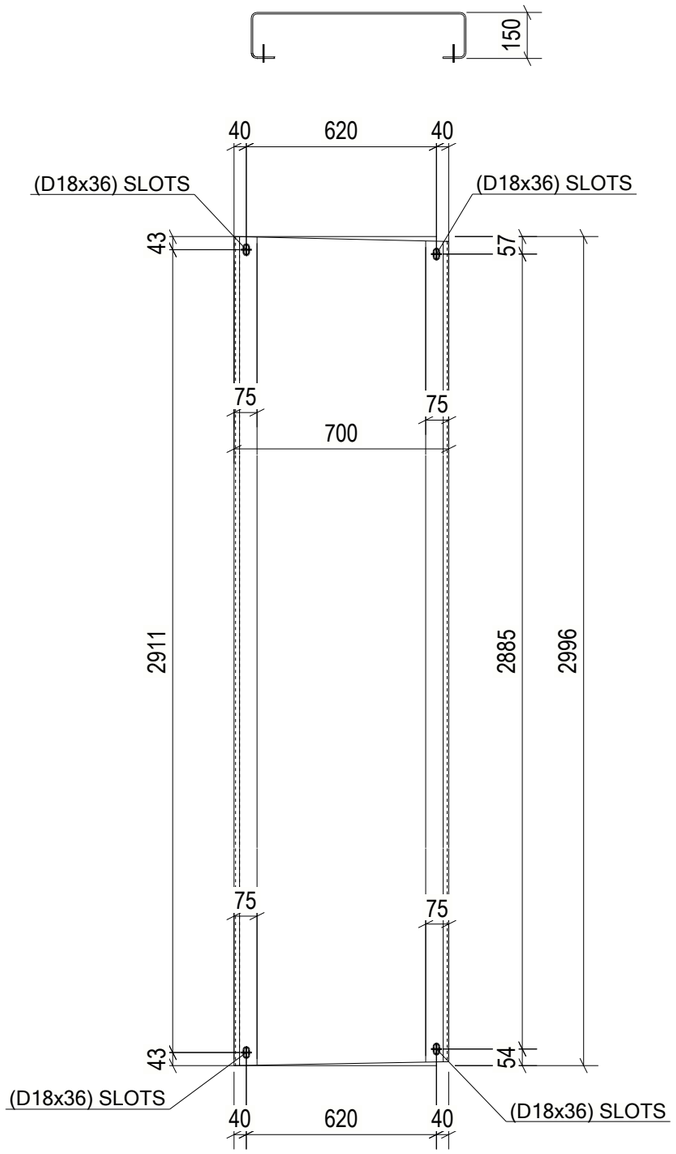

1 REQ'D AS DRAWN MK'D Z8-CHQ072

6 October Monorail Engineering Unit Valid For Construction

GENERAL NOTES:

1. THE DIMENSIONS SHOWN ARE NOMINAL (IN MILLIMETERS), U.N.O.
2. WELD SIZESHALL BE AISC MINIMUM OF 6 mm UNLESS NOTED OTHERWISE.
3. ALL FIELD WELDS SHALL BE INSPECTED PER QUALITY ASSURANCE AND SPECIAL INSPECTIONS.

REFERENCE DRAWINGS

1	93M-BOA-NAT-LOT-04833
2	93M-BOA-NAT-LOT-09170
3	93M-BOA-NAT-LOT-01976
4	93M-BOA-NAT-LOT-20021
5	
6	
7	
8	
9	

6TH OF OCTOBER CITY RAIL TRANSIT MONORAIL

The Authority | Consultant: Hill International | Main Contractor: ORASCOM CONSTRUCTION, BOMBARDIER | Structural Designer: INNOVA TRANSPORTATION

KEY PLAN:

SCALE	SHOP DRAWING	DATE
AS SHOWN		12/05/2023

REV.	DATE	DRN	CHK	APP.	AMENDMENTS	STATUS
B	12/05/2023	M.KH	M.KH	DR.M.M	ISSUED FOR INFORMATION	IFI

DRAWING TITLE

6TH OF OCTOBER MONORAIL
SERVICE WALKWAYS
ZONE (1008)
Z8-CHQ072

Project Code	Rubric	Initiator	Lot	Ref	Number	Revision
9 3	M 0 4 7 6	A C C	6 0 D E P	D W G	0 8 5 9 3	B

Tekla structures

approval is subject to approval of coordination package between multi-discipline

REVIEWED WITH COMMENT
MONORAILS PROJECT

All holes are 22mm U.N.O Length & Area & Weight per piece

Mark	Profile	Grade	QTY	Length	Area	Weight
Z8-CHQ071	CHQD5*1103.4	S235JR	1	3074.7	6.60	128.4

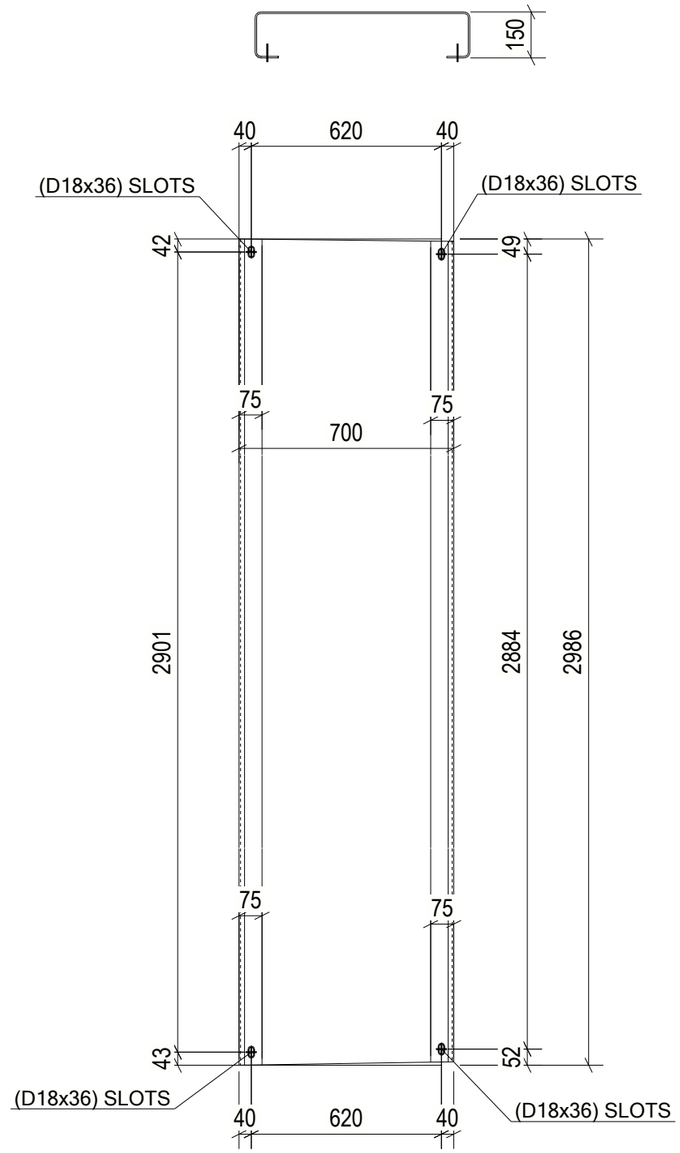

1 REQ'D AS DRAWN MK'D Z8-CHQ071

6 October Monorail
Engineering Unit
Valid For Construction

GENERAL NOTES:

1. THE DIMENSIONS SHOWN ARE NOMINAL (IN MILLIMETERS), U.N.O.
2. WELD SIZESHALL BE AISC MINIMUM OF 6 mm UNLESS NOTED OTHERWISE.
3. ALL FIELD WELDS SHALL BE INSPECTED PER QUALITY ASSURANCE AND SPECIAL INSPECTIONS.

REFERENCE DRAWINGS

1	93M-BOA-NAT-LOT-04833
2	93M-BOA-NAT-LOT-09170
3	93M-BOA-NAT-LOT-01976
4	93M-BOA-NAT-LOT-20021
5	
6	
7	
8	
9	

6TH OF OCTOBER CITY RAIL TRANSIT MONORAIL

The Authority | Consultant: Hill International | Main Contractor: ORASCOM CONSTRUCTION / BOMBARDIER | Structural Designer: INNOVA TRANSPORTATION

KEY PLAN:

SCALE	SHOP DRAWING	DATE
AS SHOWN		12/05/2023

REV	DATE	DSN	CHK	APP	AMENDMENTS	STATUS
B	12/05/2023	M.KH	M.KH	DR.M.M	ISSUED FOR INFORMATION	IFI
A	11/04/2023	M.KH	M.KH	DR.M.M	ISSUED FOR INFORMATION	IFI

DRAWING TITLE
6TH OF OCTOBER MONORAIL
SERVICE WALKWAYS
ZONE (1008)
Z8-CHQ071

Project Code	Rubric	Initiator	Lot	Ref	Number	Revision
9 3	M 0 4 7 6	A C C	6 0 D E P	D W G	0 8 5 9 4	B

Tekla structures

approval is subject to approval of coordination package between multi-discipline

REVIEWED WITH COMMENT
MONORAILS PROJECT

All holes are 22mm U.N.O Length & Area & Weight per piece						
Z8-CHQ070	CHQD5*1103.4	S235JR	1	2367.7	5.04	97.9
Mark	Profile	Grade	QTY	Length	Area	Weight

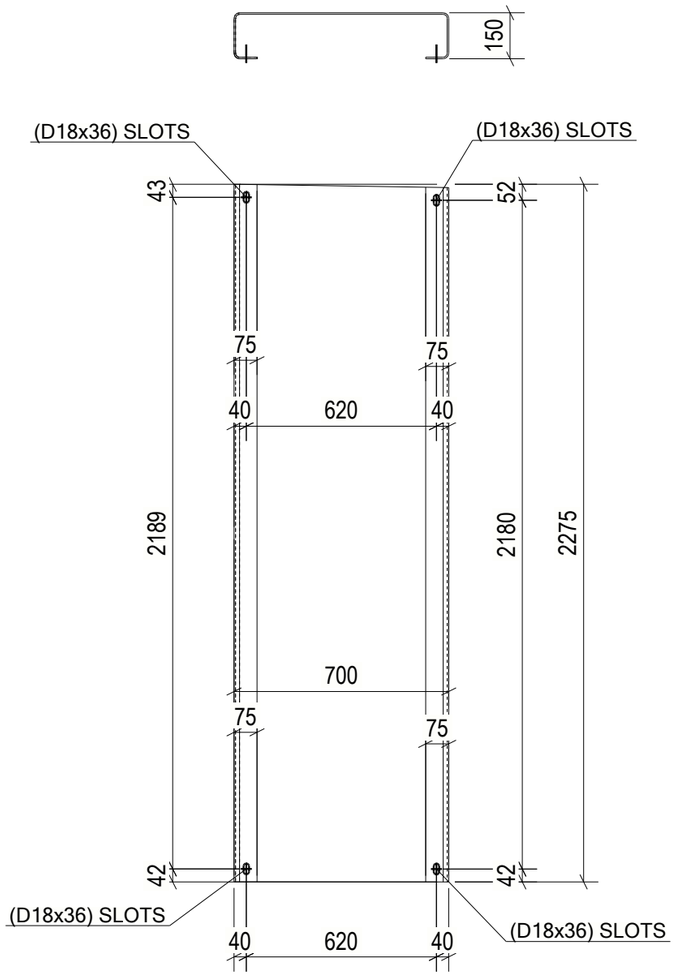

1 REQ'D AS DRAWN MK'D Z8-CHQ070

6 October Monorail
Engineering Unit
Valid For Construction

GENERAL NOTES:

1. THE DIMENSIONS SHOWN ARE NOMINAL (IN MILLIMETERS), U.N.O.
2. WELD SIZESHALL BE AISC MINIMUM OF 6 mm UNLESS NOTED OTHERWISE.
3. ALL FIELD WELDS SHALL BE INSPECTED PER QUALITY ASSURANCE AND SPECIAL INSPECTIONS.

REFERENCE DRAWINGS

1	93M-BOA-NAT-LOT-04833
2	93M-BOA-NAT-LOT-09170
3	93M-BOA-NAT-LOT-01976
4	93M-BOA-NAT-LOT-20021
5	
6	
7	
8	
9	

6TH OF OCTOBER CITY RAIL TRANSIT MONORAIL

The Authority | Hill International Consultant | Main Contractor | Structural Designer

KEY PLAN:

SCALE: AS SHOWN | SHOP DRAWING | DATE: 12/05/2023

REV	DATE	DES.	CHK.	APP.	AMENDMENTS DESCRIPTION	STATUS
B	12/05/2023	M.KH	M.KH	DR.M.M	ISSUED FOR INFORMATION	IFI

DRAWING TITLE
6TH OF OCTOBER MONORAIL
SERVICE WALKWAYS
ZONE (1008)
Z8-CHQ070

Project Code	Rubric	Initiator	Lot	Ref	Number	Revision
9 3	M 0 4 7 6	A C C	6 0 D E	P	D W G	0 8 5 9 5	B

Tekla structures

approval is subject to approval of coordination package between multi-discipline

REVIEWED WITH COMMENT MONORAILS PROJECT

All holes are 22mm U.N.O Length & Area & Weight per piece						
Z8-CHQ069	CHQD5*1103.4	S235JR	1	2360.2	5.02	97.6
Mark	Profile	Grade	QTY	Length	Area	Weight

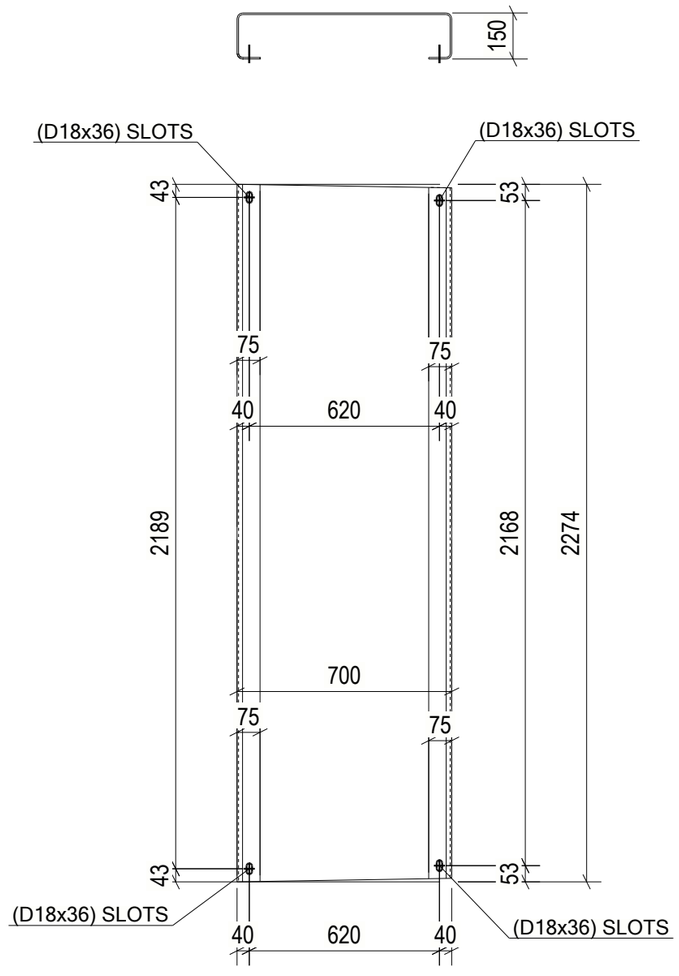

1 REQ'D AS DRAWN MK'D Z8-CHQ069

6 October Monorail Engineering Unit Valid For Construction

GENERAL NOTES:

1. THE DIMENSIONS SHOWN ARE NOMINAL (IN MILLIMETERS), U.N.O.
2. WELD SIZESHALL BE AISC MINIMUM OF 6 mm UNLESS NOTED OTHERWISE.
3. ALL FIELD WELDS SHALL BE INSPECTED PER QUALITY ASSURANCE AND SPECIAL INSPECTIONS.

REFERENCE DRAWINGS

1	93M-BOA-NAT-LOT-04833
2	93M-BOA-NAT-LOT-09170
3	93M-BOA-NAT-LOT-01976
4	93M-BOA-NAT-LOT-20021
5	
6	
7	
8	
9	

6TH OF OCTOBER CITY RAIL TRANSIT MONORAIL

The Authority | Hill International Consultant | ORASCOM BOMBARDIER Main Contractor | INNOVA Structural Designer

KEY PLAN:

SCALE	SHOP DRAWING	DATE
AS SHOWN		12/05/2023

REV	DATE	DSG	CHK	APP	AMENDMENTS	STATUS
B	12/05/2023	M.KH	M.KH	DR.M.M	ISSUED FOR INFORMATION	IFI

DRAWING TITLE

6TH OF OCTOBER MONORAIL SERVICE WALKWAYS ZONE (1008)
Z8-CHQ069

Project Code	Rubric	Initiator	Lot	Ref	Number	Revision
93M	0476	ACC	60DEP	DWG	08596	B

Tekla structures

approval is subject to approval of coordination package between multi-discipline

REVIEWED WITH COMMENT
MONORAILS PROJECT

All holes are 22mm U.N.O Length & Area & Weight per piece						
Z8-CHQ068	CHQD5*1103.4	S235JR	1	3075.5	6.61	128.4
Mark	Profile	Grade	QTY	Length	Area	Weight

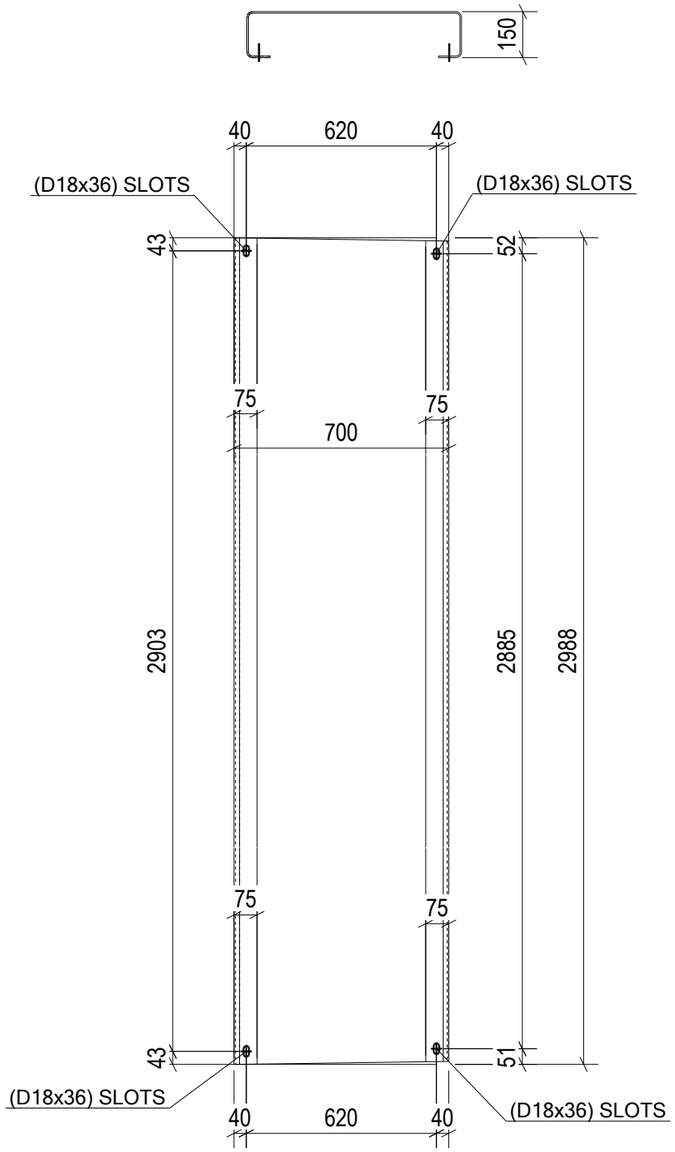

1 REQ'D AS DRAWN MK'D Z8-CHQ068

6 October Monorail
Engineering Unit
Valid For Construction

GENERAL NOTES:

1. THE DIMENSIONS SHOWN ARE NOMINAL (IN MILLIMETERS), U.N.O.
2. WELD SIZESHALL BE AISC MINIMUM OF 6 mm UNLESS NOTED OTHERWISE.
3. ALL FIELD WELDS SHALL BE INSPECTED PER QUALITY ASSURANCE AND SPECIAL INSPECTIONS.

REFERENCE DRAWINGS

1	93M-BOA-NAT-LOT-04833
2	93M-BOA-NAT-LOT-09170
3	93M-BOA-NAT-LOT-01976
4	93M-BOA-NAT-LOT-20021
5	
6	
7	
8	
9	

6TH OF OCTOBER CITY RAIL TRANSIT MONORAIL

The Authority | Consultant: Hill International | Main Contractor: ORASCOM CONSTRUCTION, BOMBARDIER | Structural Designer: INNOVA TRANSPORTATION

KEY PLAN:

SCALE	SHOP DRAWING	DATE
AS SHOWN		12/05/2023

REV	DATE	DSN	CHK	APP	AMENDMENTS	STATUS
B	12/05/2023	M.KH	M.KH	DR.M.M	ISSUED FOR INFORMATION	IFI

DRAWING TITLE
6TH OF OCTOBER MONORAIL
SERVICE WALKWAYS
ZONE (1008)
Z8-CHQ068

Project Code	Rubric	Initiator	Lot	Ref	Number	Revision
9 3	M 0 4 7 6	A C C	6 0 D E P	D W G	0 8 5 9 7	B

Tekla structures

approval is subject to approval of coordination package between multi-discipline

REVIEWED WITH COMMENT
MONORAILS PROJECT

All holes are 22mm U.N.O Length & Area & Weight per piece						
Z8-CHQ067	CHQD5*1103.4	S235JR	2	3075.4	6.61	128.4
Mark	Profile	Grade	QTY	Length	Area	Weight

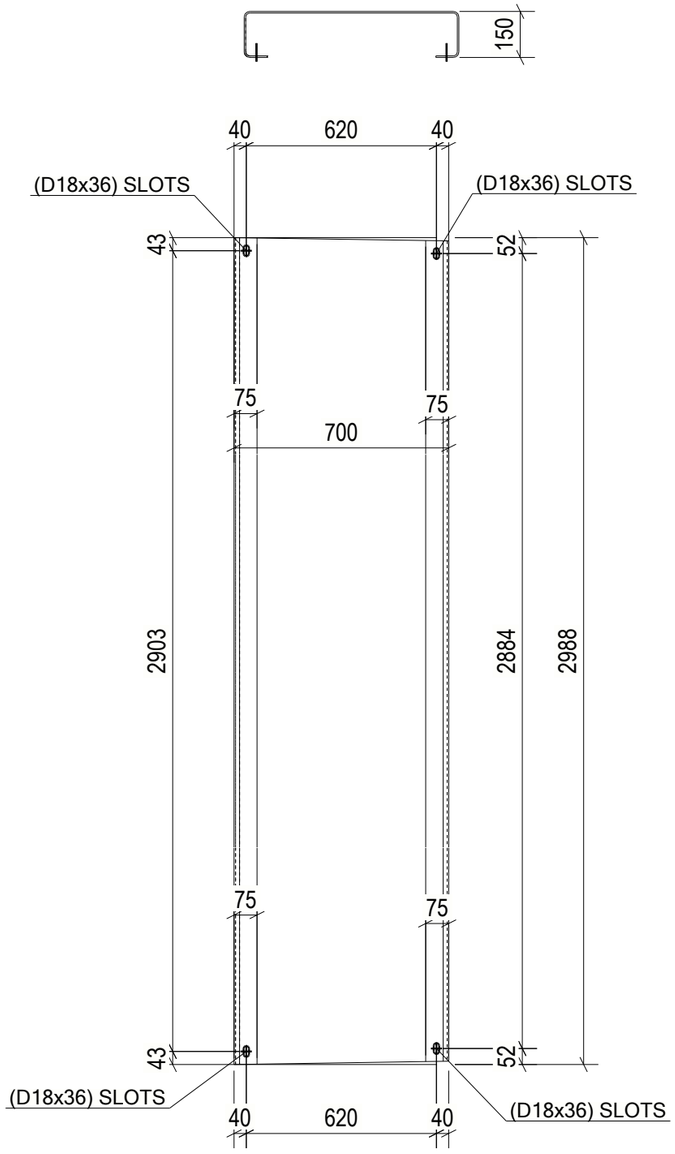

2 REQ'D AS DRAWN MK'D Z8-CHQ067

6 October Monorail
Engineering Unit
Valid For Construction

GENERAL NOTES:

1. THE DIMENSIONS SHOWN ARE NOMINAL (IN MILLIMETERS), U.N.O.
2. WELD SIZESHALL BE AISC MINIMUM OF 6 mm UNLESS NOTED OTHERWISE.
3. ALL FIELD WELDS SHALL BE INSPECTED PER QUALITY ASSURANCE AND SPECIAL INSPECTIONS.

REFERENCE DRAWINGS

1	93M-BOA-NAT-LOT-04833
2	93M-BOA-NAT-LOT-09170
3	93M-BOA-NAT-LOT-01976
4	93M-BOA-NAT-LOT-20021
5	
6	
7	
8	
9	

6TH OF OCTOBER CITY RAIL TRANSIT MONORAIL

The Authority | Consultant: Hill International | Main Contractor: ORASCOM CONSTRUCTION, BOMBARDIER | Structural Designer: INNOVA TRANSPORTATION

KEY PLAN:

SCALE	SHOP DRAWING	DATE
AS SHOWN		12/05/2023

REV	DATE	DSN	CHK	APP	AMENDMENTS	STATUS
B	12/05/2023	M.KH	M.KH	DR.M.M	ISSUED FOR INFORMATION	IFI

DRAWING TITLE
6TH OF OCTOBER MONORAIL
SERVICE WALKWAYS
ZONE (1008)
Z8-CHQ067

Project Code	Rubric	Initiator	Lot	Ref	Number	Revision
9 3	M 0 4 7 6	A C C	6 0 D E P	D W G	0 8 5 9 8	B

Tekla structures

approval is subject to approval of coordination package between multi-discipline

REVIEWED WITH COMMENT MONORAILS PROJECT

All holes are 22mm U.N.O Length & Area & Weight per piece						
Z8-CHQ066	CHQD5*1103.4	S235JR	1	3087.2	6.63	128.9
Mark	Profile	Grade	QTY	Length	Area	Weight

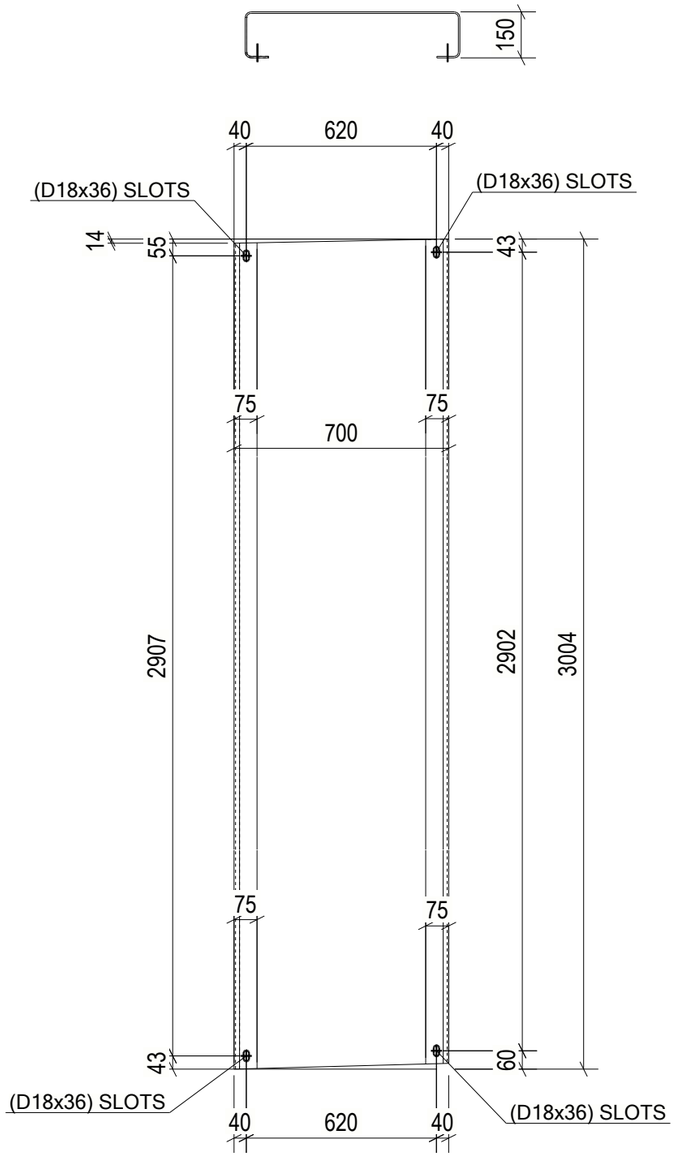

1 REQ'D AS DRAWN MK'D Z8-CHQ066

6 October Monorail Engineering Unit Valid For Construction

GENERAL NOTES:

1. THE DIMENSIONS SHOWN ARE NOMINAL (IN MILLIMETERS), U.N.O.
2. WELD SIZESHALL BE AISC MINIMUM OF 6 mm UNLESS NOTED OTHERWISE.
3. ALL FIELD WELDS SHALL BE INSPECTED PER QUALITY ASSURANCE AND SPECIAL INSPECTIONS.

REFERENCE DRAWINGS

1	93M-BOA-NAT-LOT-04833
2	93M-BOA-NAT-LOT-09170
3	93M-BOA-NAT-LOT-01976
4	93M-BOA-NAT-LOT-20021
5	
6	
7	
8	
9	

6TH OF OCTOBER CITY RAIL TRANSIT MONORAIL

The Authority | Hill International Consultant | ORASCOM BOMBARDIER Main Contractor | INNOVA Structural Designer

KEY PLAN:

SCALE	SHOP DRAWING	DATE
AS SHOWN		12/05/2023

REV	DATE	DSN	CHK	APP	AMENDMENTS	STATUS
B	12/05/2023	M.KH	M.KH	DR.M.M	ISSUED FOR INFORMATION	IFI

DRAWING TITLE

6TH OF OCTOBER MONORAIL SERVICE WALKWAYS ZONE (1008) Z8-CHQ066

Project Code	Rubric	Initiator	Lot	Ref	Number	Revision
93M	0476	ACC	60DEP	DWG	08599	B

Tekla structures

approval is subject to approval of coordination package between multi-discipline

REVIEWED WITH COMMENT
MONORAILS PROJECT

All holes are 22mm U.N.O Length & Area & Weight per piece						
Z8-CHQ065	CHQD5*1103.4	S235JR	1	3092.4	6.64	129.1
Mark	Profile	Grade	QTY	Length	Area	Weight

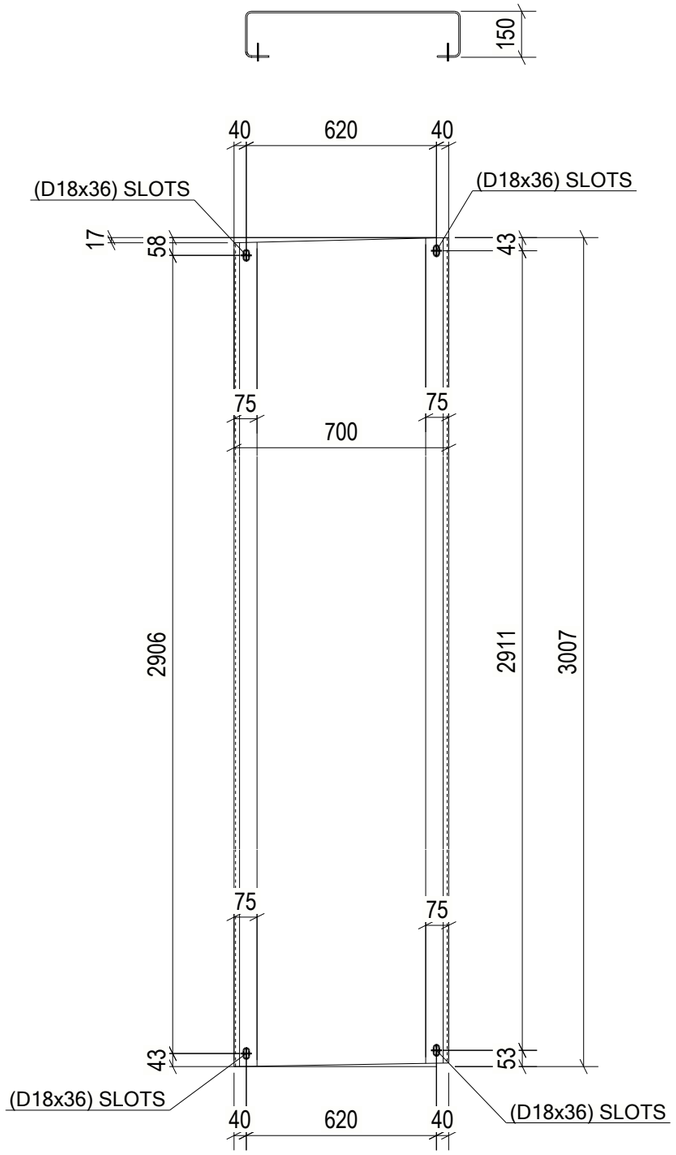

1 REQ'D AS DRAWN MK'D Z8-CHQ065

6 October Monorail Engineering Unit Valid For Construction

GENERAL NOTES:

1. THE DIMENSIONS SHOWN ARE NOMINAL (IN MILLIMETERS), U.N.O.
2. WELD SIZESHALL BE AISC MINIMUM OF 6 mm UNLESS NOTED OTHERWISE.
3. ALL FIELD WELDS SHALL BE INSPECTED PER QUALITY ASSURANCE AND SPECIAL INSPECTIONS.

REFERENCE DRAWINGS

1	93M-BOA-NAT-LOT-04833
2	93M-BOA-NAT-LOT-09170
3	93M-BOA-NAT-LOT-01976
4	93M-BOA-NAT-LOT-20021
5	
6	
7	
8	
9	

6TH OF OCTOBER CITY RAIL TRANSIT MONORAIL

The Authority | Hill International (Consultant) | ORASCOM CONSTRUCTION / BOMBARDIER (Main Contractor) | INNOVA TRANSPORTATION (Structural Designer)

KEY PLAN:

SCALE	SHOP DRAWING	DATE
AS SHOWN		12/05/2023

REV	DATE	DRN	CHK	APP	AMENDMENTS	STATUS
B	12/05/2023	M.KH	M.KH	DR.M.M	ISSUED FOR INFORMATION	IFI

DRAWING TITLE
6TH OF OCTOBER MONORAIL
SERVICE WALKWAYS
ZONE (1008)
Z8-CHQ065

Project Code	Rubric	Initiator	Lot	Ref	Number	Revision
9 3	M 0 4 7 6	A C C	6 0 D E P	D W G	0 8 6 0 0	B

Tekla structures

approval is subject to approval of coordination package between multi-discipline

REVIEWED WITH COMMENT
MONORAILS PROJECT

All holes are 22mm U.N.O Length & Area & Weight per piece						
Z8-CHQ063	CHQD5*1103.4	S235JR	1	3090.5	6.63	129.0
Mark	Profile	Grade	QTY	Length	Area	Weight

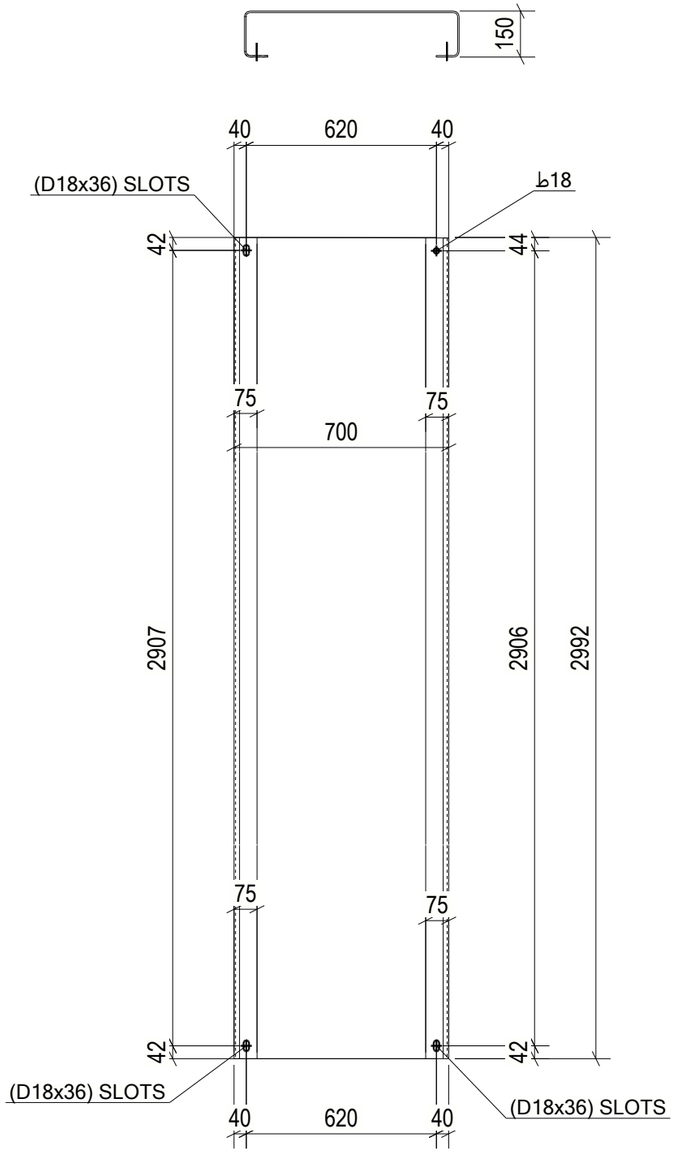

1 REQ'D AS DRAWN MK'D Z8-CHQ063

6 October Monorail
Engineering Unit
Valid For Construction

GENERAL NOTES:

1. THE DIMENSIONS SHOWN ARE NOMINAL (IN MILLIMETERS), U.N.O.
2. WELD SIZESHALL BE AISC MINIMUM OF 6 mm UNLESS NOTED OTHERWISE.
3. ALL FIELD WELDS SHALL BE INSPECTED PER QUALITY ASSURANCE AND SPECIAL INSPECTIONS.

REFERENCE DRAWINGS

1	93M-BOA-NAT-LOT-04833
2	93M-BOA-NAT-LOT-09170
3	93M-BOA-NAT-LOT-01976
4	93M-BOA-NAT-LOT-20021
5	
6	
7	
8	
9	

6TH OF OCTOBER CITY RAIL TRANSIT MONORAIL

The Authority | Consultant: Hill International | Main Contractor: ORASCOM CONSTRUCTION, BOMBARDIER | Structural Designer: INNOVA TRANSPORTATION

KEY PLAN:

SCALE	SHOP DRAWING	DATE
AS SHOWN		12/05/2023

REV	DATE	DSN	CHK	APP	AMENDMENTS DESCRIPTION	STATUS
B	12/05/2023	M.KH	M.KH	DR.M.M	ISSUED FOR INFORMATION	IFI
A	11/04/2023	M.KH	M.KH	DR.M.M	ISSUED FOR INFORMATION	IFI

DRAWING TITLE
6TH OF OCTOBER MONORAIL
SERVICE WALKWAYS
ZONE (1008)
Z8-CHQ063

Project Code	Rubric	Initiator	Lot	Ref	Number	Revision
9 3 M	0 4 7 6	A C C	6 0 D E P	D W G	0 8 6 0 2	B

Tekla structures

approval is subject to approval of coordination package between multi-discipline

REVIEWED WITH COMMENT
MONORAILS PROJECT

All holes are 22mm U.N.O Length & Area & Weight per piece

Mark	Profile	Grade	QTY	Length	Area	Weight
Z8-CHQ062	CHQD5*1103.4	S235JR	1	3090.1	6.63	129.0

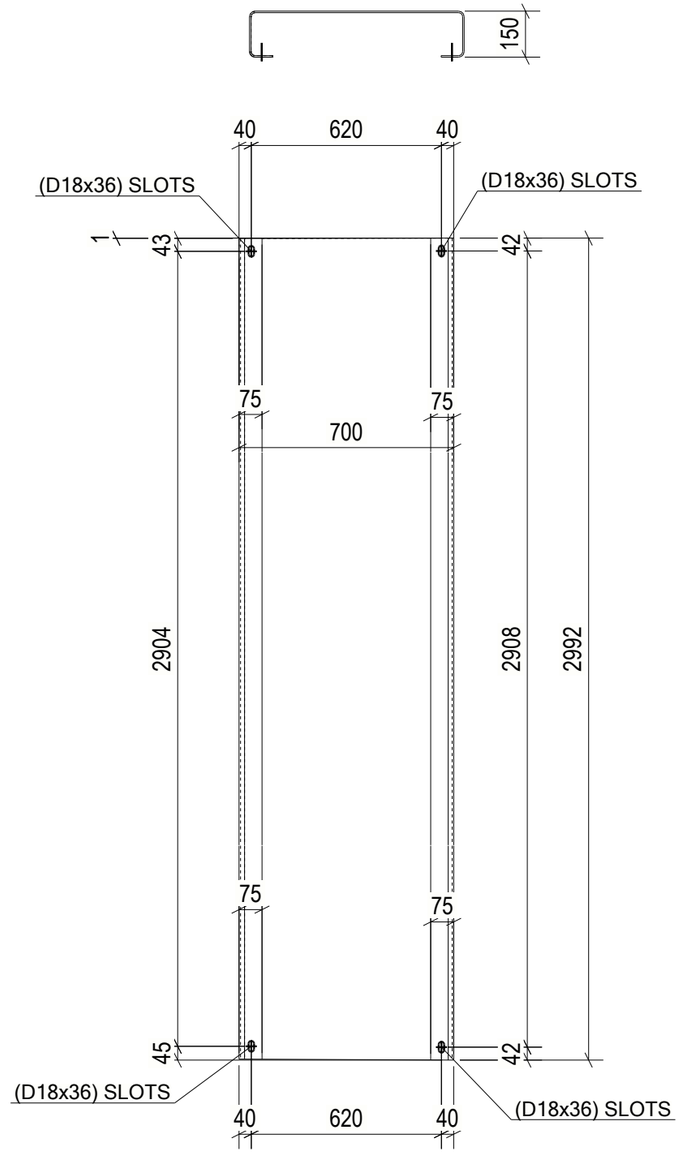

1 REQ'D AS DRAWN MK'D Z8-CHQ062

6 October Monorail Engineering Unit Valid For Construction

GENERAL NOTES:

1. THE DIMENSIONS SHOWN ARE NOMINAL (IN MILLIMETERS), U.N.O.
2. WELD SIZESHALL BE AISC MINIMUM OF 6 mm UNLESS NOTED OTHERWISE.
3. ALL FIELD WELDS SHALL BE INSPECTED PER QUALITY ASSURANCE AND SPECIAL INSPECTIONS.

REFERENCE DRAWINGS

1	93M-BOA-NAT-LOT-04833
2	93M-BOA-NAT-LOT-09170
3	93M-BOA-NAT-LOT-01976
4	93M-BOA-NAT-LOT-20021
5	
6	
7	
8	
9	

6TH OF OCTOBER CITY RAIL TRANSIT MONORAIL

The Authority | Consultant: Hill International | Main Contractor | Structural Designer

KEY PLAN:

SCALE	SHOP DRAWING	DATE
AS SHOWN		12/05/2023

REV	DATE	DSN	CHK	APP	AMENDMENTS	STATUS
B	12/05/2023	M.KH	M.KH	DR.M.M	ISSUED FOR INFORMATION	IFI
A	11/04/2023	M.KH	M.KH	DR.M.M	ISSUED FOR INFORMATION	IFI

DRAWING TITLE

6TH OF OCTOBER MONORAIL
SERVICE WALKWAYS
ZONE (1008)
Z8-CHQ062

Project Code	Rubric	Initiator	Lot	Ref	Number	Revision
93M	047	ACC	60DEP	DWG	08603	B

Tekla structures

approval is subject to approval of coordination package between multi-discipline

REVIEWED WITH COMMENT
MONORAILS PROJECT

All holes are 22mm U.N.O Length & Area & Weight per piece						
Z8-CHQ061	CHQD5*1103.4	S235JR	1	3086.1	6.63	128.8
Mark	Profile	Grade	QTY	Length	Area	Weight

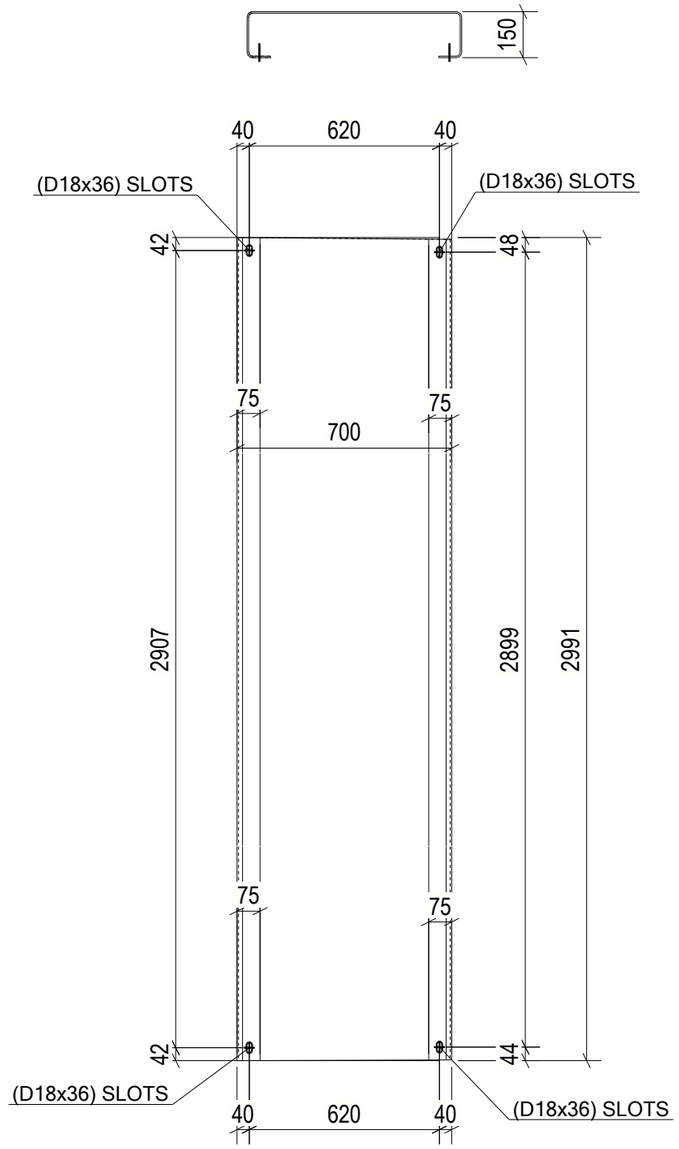

1 REQ'D AS DRAWN MK'D Z8-CHQ061

6 October Monorail Engineering Unit Valid For Construction

GENERAL NOTES:

1. THE DIMENSIONS SHOWN ARE NOMINAL (IN MILLIMETERS), U.N.O.
2. WELD SIZESHALL BE AISC MINIMUM OF 6 mm UNLESS NOTED OTHERWISE.
3. ALL FIELD WELDS SHALL BE INSPECTED PER QUALITY ASSURANCE AND SPECIAL INSPECTIONS.

REFERENCE DRAWINGS

1	93M-BOA-NAT-LOT-04833
2	93M-BOA-NAT-LOT-09170
3	93M-BOA-NAT-LOT-01976
4	93M-BOA-NAT-LOT-20021
5	
6	
7	
8	
9	

6TH OF OCTOBER CITY RAIL TRANSIT MONORAIL

The Authority | Hill International Consultant | Main Contractor | Structural Designer

KEY PLAN:

SCALE	SHOP DRAWING	DATE
AS SHOWN		12/05/2023

REV	DATE	DSN	CHK	APP	AMENDMENTS	STATUS
B	12/05/2023	M.KH	M.KH	DR.M.M	ISSUED FOR INFORMATION	IFI

DRAWING TITLE

6TH OF OCTOBER MONORAIL
SERVICE WALKWAYS
ZONE (1008)
Z8-CHQ061

Project Code	Rubric	Initiator	Lot	Ref	Number	Revision
9 3	M 0 4 7 6	A C C	6 0 D E P	D W G	0 8 6 0 4	B

Tekla structures

approval is subject to approval of coordination package between multi-discipline

REVIEWED WITH COMMENT
MONORAILS PROJECT

All holes are 22mm U.N.O Length & Area & Weight per piece						
Z8-CHQ060	CHQD5*1103.4	S235JR	1	1595.1	3.32	64.5
Mark	Profile	Grade	QTY	Length	Area	Weight

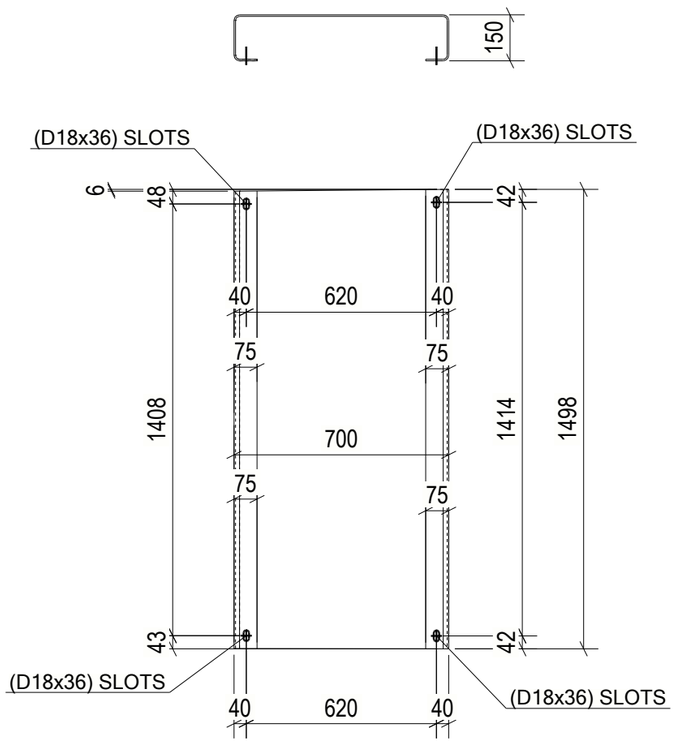

1 REQ'D AS DRAWN MK'D Z8-CHQ060

GENERAL NOTES:

1. THE DIMENSIONS SHOWN ARE NOMINAL (IN MILLIMETERS), U.N.O.
2. WELD SIZESHALL BE AISC MINIMUM OF 6 mm UNLESS NOTED OTHERWISE.
3. ALL FIELD WELDS SHALL BE INSPECTED PER QUALITY ASSURANCE AND SPECIAL INSPECTIONS.

REFERENCE DRAWINGS

1	93M-BOA-NAT-LOT-04833
2	93M-BOA-NAT-LOT-09170
3	93M-BOA-NAT-LOT-01976
4	93M-BOA-NAT-LOT-20021
5	
6	
7	
8	
9	

6TH OF OCTOBER CITY RAIL TRANSIT MONORAIL

The Authority | Hill International Consultant | Main Contractor | Structural Designer

KEY PLAN:

6 October Monorail
Engineering Unit
Valid For Construction

REV	DATE	DRN	CHK	APP	AMENDMENTS	STATUS
B	12/05/2023	M.KH	M.KH	DR.M.M	ISSUED FOR INFORMATION	IFI

SCALE: AS SHOWN | SHOP DRAWING | DATE: 12/05/2023

DRAWING TITLE
6TH OF OCTOBER MONORAIL
SERVICE WALKWAYS
ZONE (1008)
Z8-CHQ060

Project Code	Rubric	Initator	Lot	Ref	Number	Revision
93M	047	ACC	60	DEP	DWG	08605	B

Tekla structures

approval is subject to approval of coordination package between multi-discipline

REVIEWED WITH COMMENT
MONORAILS PROJECT

All holes are 22mm U.N.O Length & Area & Weight per piece

Mark	Profile	Grade	QTY	Length	Area	Weight
Z8-CHQ059	CHQD5*1103.4	S235JR	1	3087.7	6.63	128.9

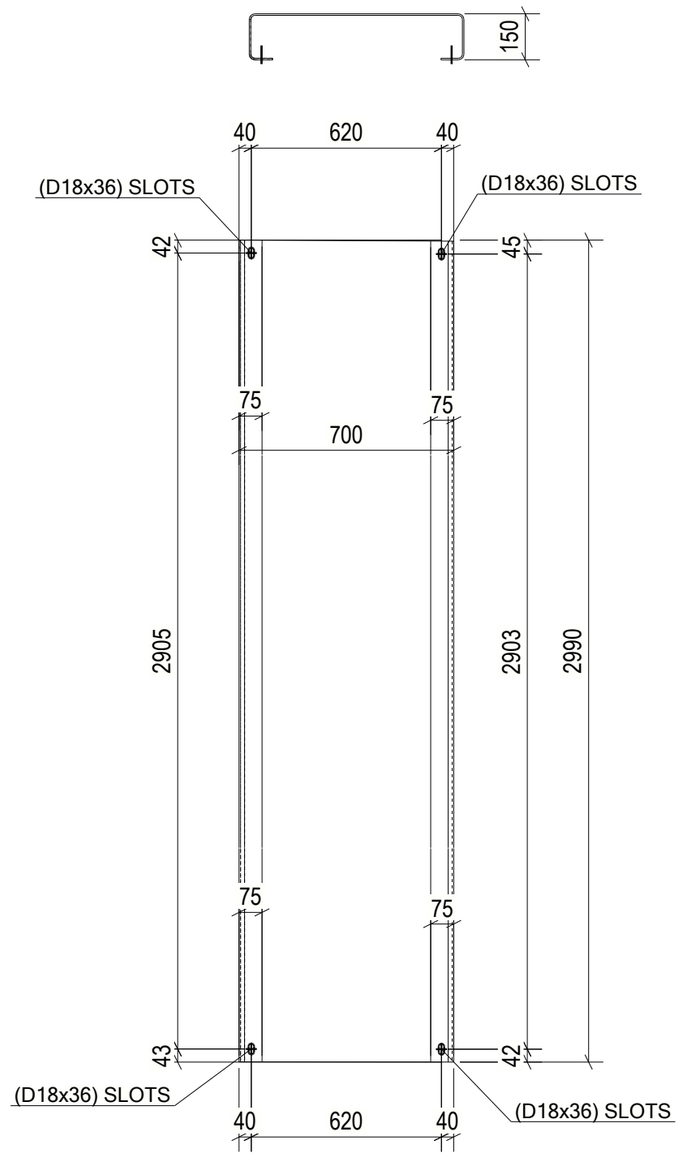

1 REQ'D AS DRAWN MK'D Z8-CHQ059

6 October Monorail
Engineering Unit
Valid For Construction

GENERAL NOTES:

1. THE DIMENSIONS SHOWN ARE NOMINAL (IN MILLIMETERS), U.N.O.
2. WELD SIZESHALL BE AISC MINIMUM OF 6 mm UNLESS NOTED OTHERWISE.
3. ALL FIELD WELDS SHALL BE INSPECTED PER QUALITY ASSURANCE AND SPECIAL INSPECTIONS.

REFERENCE DRAWINGS

1	93M-BOA-NAT-LOT-04833
2	93M-BOA-NAT-LOT-09170
3	93M-BOA-NAT-LOT-01976
4	93M-BOA-NAT-LOT-20021
5	
6	
7	
8	
9	

6TH OF OCTOBER CITY RAIL TRANSIT MONORAIL

The Authority | Consultant: Hill International | Main Contractor: ORASCOM CONSTRUCTION / BOMBARDIER | Structural Designer: INNOVA TRANSPORTATION

KEY PLAN:

REV	DATE	DSN	CHK	APP	AMENDMENTS	STATUS
B	12/05/2023	M.KH	M.KH	DR.M.M	ISSUED FOR INFORMATION	IFI
A	11/04/2023	M.KH	M.KH	DR.M.M	ISSUED FOR INFORMATION	IFI

SCALE: AS SHOWN
SHOP DRAWING
DATE: 12/05/2023

DRAWING TITLE
6TH OF OCTOBER MONORAIL
SERVICE WALKWAYS
ZONE (1008)
Z8-CHQ059

Project Code	Rubric	Initiator	Lot	Ref	Number	Revision
93M	047	ACC	600	DEP	DWG	08606	B

Tekla structures

approval is subject to approval of coordination package between multi-discipline

REVIEWED WITH COMMENT
MONORAILS PROJECT

All holes are 22mm U.N.O Length & Area & Weight per piece						
Z8-CHQ058	CHQD5*1103.4	S235JR	1	1593.6	3.32	64.4
Mark	Profile	Grade	QTY	Length	Area	Weight

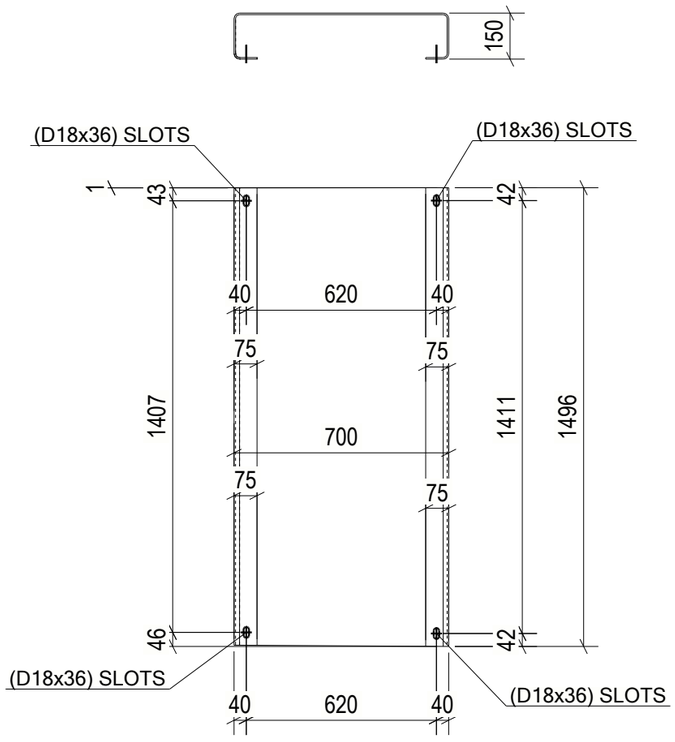

1 REQ'D AS DRAWN MK'D Z8-CHQ058

6 October Monorail Engineering Unit Valid For Construction

GENERAL NOTES:

1. THE DIMENSIONS SHOWN ARE NOMINAL (IN MILLIMETERS), U.N.O.
2. WELD SIZESHALL BE AISC MINIMUM OF 6 mm UNLESS NOTED OTHERWISE.
3. ALL FIELD WELDS SHALL BE INSPECTED PER QUALITY ASSURANCE AND SPECIAL INSPECTIONS.

REFERENCE DRAWINGS

1	93M-BOA-NAT-LOT-04833
2	93M-BOA-NAT-LOT-09170
3	93M-BOA-NAT-LOT-01976
4	93M-BOA-NAT-LOT-20021
5	
6	
7	
8	
9	

6TH OF OCTOBER CITY RAIL TRANSIT MONORAIL

The Authority | Hill International Consultant | Main Contractor | Structural Designer

KEY PLAN:

SCALE: AS SHOWN | SHOP DRAWING | DATE: 12/05/2023

REV	DATE	DSN	CHK	APP	AMENDMENTS DESCRIPTION	STATUS
B	12/05/2023	M.KH	M.KH	DR.M.M	ISSUED FOR INFORMATION	IFI

DRAWING TITLE
6TH OF OCTOBER MONORAIL SERVICE WALKWAYS ZONE (1008)
Z8-CHQ058

Project Code	Rubric	Initiator	Lot	Ref	Number	Revision
9 3	M 0 4 7 6	A C C	6 0 D E P	D W G	0 8 6 0 7	B

Tekla structures

approval is subject to approval of coordination package between multi-discipline

REVIEWED WITH COMMENT
MONORAILS PROJECT

All holes are 22mm U.N.O Length & Area & Weight per piece

Mark	Profile	Grade	QTY	Length	Area	Weight
Z8-CHQ057	CHQD5*1103.4	S235JR	1	3091.4	6.64	129.1

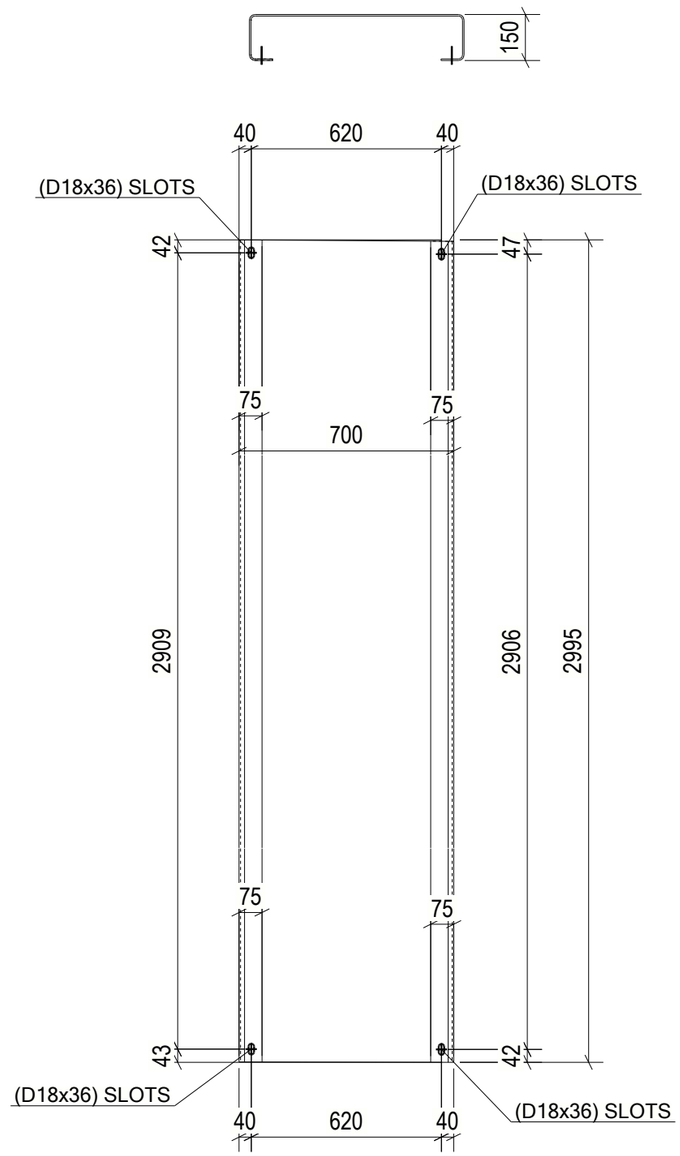

1 REQ'D AS DRAWN MK'D Z8-CHQ057

6 October Monorail Engineering Unit Valid For Construction

GENERAL NOTES:

1. THE DIMENSIONS SHOWN ARE NOMINAL (IN MILLIMETERS), U.N.O.
2. WELD SIZESHALL BE AISC MINIMUM OF 6 mm UNLESS NOTED OTHERWISE.
3. ALL FIELD WELDS SHALL BE INSPECTED PER QUALITY ASSURANCE AND SPECIAL INSPECTIONS.

REFERENCE DRAWINGS

1	93M-BOA-NAT-LOT-04833
2	93M-BOA-NAT-LOT-09170
3	93M-BOA-NAT-LOT-01976
4	93M-BOA-NAT-LOT-20021
5	
6	
7	
8	
9	

6TH OF OCTOBER CITY RAIL TRANSIT MONORAIL

The Authority | Consultant: Hill International | Main Contractor: ORASCOM CONSTRUCTION, BOMBARDIER | Structural Designer: INNOVA TRANSPORTATION

KEY PLAN:

SCALE	SHOP DRAWING	DATE
AS SHOWN		12/05/2023

REV	DATE	DSN	CHK	APP	AMENDMENTS	STATUS
B	12/05/2023	M.KH	M.KH	DR.M.M	ISSUED FOR INFORMATION	IFI

DRAWING TITLE

6TH OF OCTOBER MONORAIL
SERVICE WALKWAYS
ZONE (1008)
Z8-CHQ057

Project Code	Rubric	Initiator	Lot	Ref	Number	Revision
9 3	M 0 4 7 6	A C C	6 0 D E P	D W G	0 8 6 0 8	B

Tekla structures

approval is subject to approval of coordination package between multi-discipline

REVIEWED WITH COMMENT
MONORAILS PROJECT

All holes are 22mm U.N.O Length & Area & Weight per piece						
Z8-CHQ056	CHQD5*1103.4	S235JR	1	1585.1	3.30	64.1
Mark	Profile	Grade	QTY	Length	Area	Weight

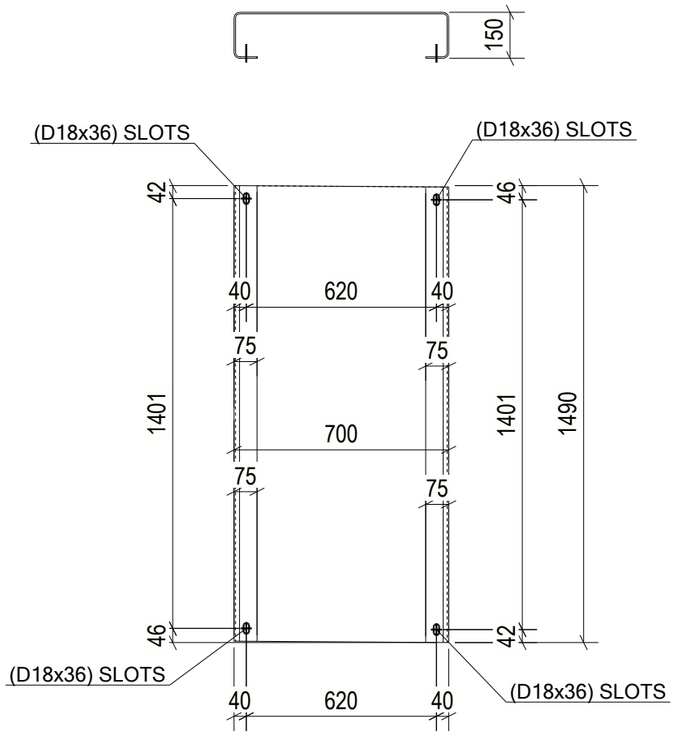

1 REQ'D AS DRAWN MK'D Z8-CHQ056

6 October Monorail
Engineering Unit
Valid For Construction

GENERAL NOTES:

1. THE DIMENSIONS SHOWN ARE NOMINAL (IN MILLIMETERS), U.N.O.
2. WELD SIZESHALL BE AISC MINIMUM OF 6 mm UNLESS NOTED OTHERWISE.
3. ALL FIELD WELDS SHALL BE INSPECTED PER QUALITY ASSURANCE AND SPECIAL INSPECTIONS.

REFERENCE DRAWINGS

1	93M-BOA-NAT-LOT-04833
2	93M-BOA-NAT-LOT-09170
3	93M-BOA-NAT-LOT-01976
4	93M-BOA-NAT-LOT-20021
5	
6	
7	
8	
9	

6TH OF OCTOBER CITY RAIL TRANSIT MONORAIL

The Authority | Hill International Consultant | Main Contractor | Structural Designer

KEY PLAN:

SCALE	SHOP DRAWING	DATE
AS SHOWN		12/05/2023

REV	DATE	DSN	CHK	APP	AMENDMENTS	STATUS
B	12/05/2023	M.KH	M.KH	DR.M.M	ISSUED FOR INFORMATION	IFI

DRAWING TITLE

6TH OF OCTOBER MONORAIL
SERVICE WALKWAYS
ZONE (1008)
Z8-CHQ056

Project Code	Rubric	Initiator	Lot	Ref	Number	Revision
9 3	M 0 4 7 6	A C C	6 0 D E P	D W G	0 8 6 0 9	B

Tekla structures

approval is subject to approval of coordination package between multi-discipline

REVIEWED WITH COMMENT
MONORAILS PROJECT

All holes are 22mm U.N.O Length & Area & Weight per piece						
Z8-CHQ055	CHQD5*1103.4	S235JR	1	3090.9	6.64	129.0
Mark	Profile	Grade	QTY	Length	Area	Weight

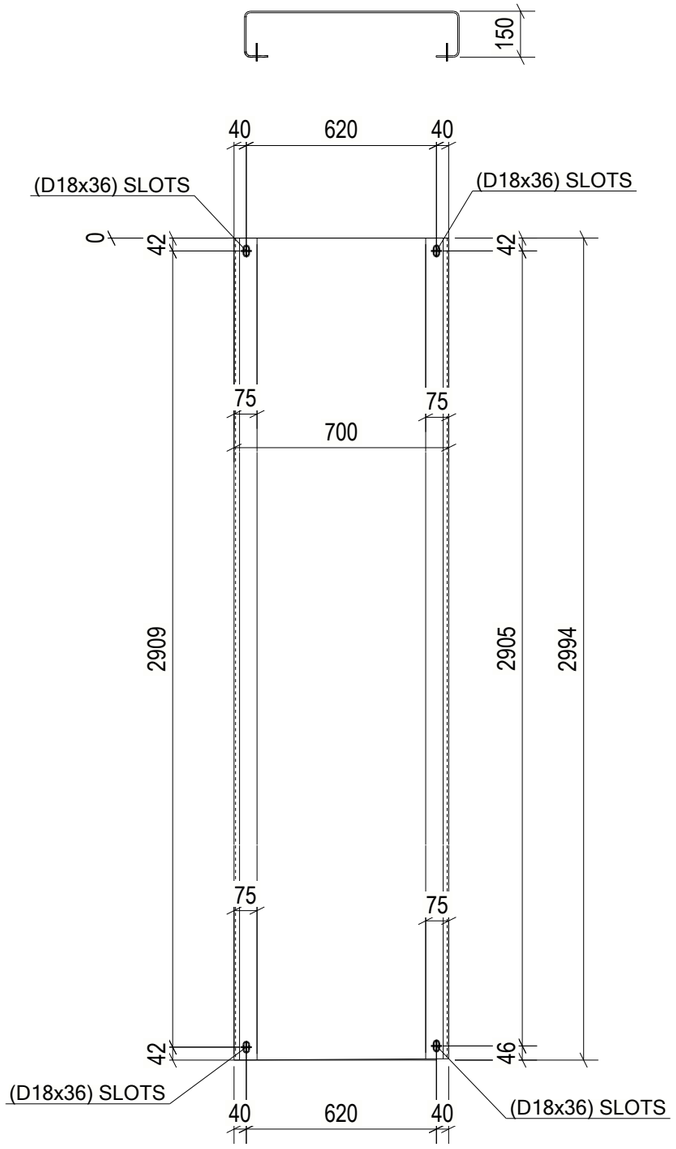

1 REQ'D AS DRAWN MK'D Z8-CHQ055

GENERAL NOTES:

1. THE DIMENSIONS SHOWN ARE NOMINAL (IN MILLIMETERS), U.N.O.
2. WELD SIZESHALL BE AISC MINIMUM OF 6 mm UNLESS NOTED OTHERWISE.
3. ALL FIELD WELDS SHALL BE INSPECTED PER QUALITY ASSURANCE AND SPECIAL INSPECTIONS.

REFERENCE DRAWINGS

1	93M-BOA-NAT-LOT-04833
2	93M-BOA-NAT-LOT-09170
3	93M-BOA-NAT-LOT-01976
4	93M-BOA-NAT-LOT-20021
5	
6	
7	
8	
9	

6TH OF OCTOBER CITY RAIL TRANSIT MONORAIL

The Authority | Hill International (Consultant) | Main Contractor | Structural Designer

KEY PLAN:

6 October Monorail Engineering Unit Valid For Construction

REV	DATE	DSN	CHK	APP	AMENDMENTS	STATUS
B	12/05/2023	M.KH	M.KH	DR.M.M	ISSUED FOR INFORMATION	IFI

SCALE: AS SHOWN | SHOP DRAWING | DATE: 12/05/2023

DRAWING TITLE
6TH OF OCTOBER MONORAIL
SERVICE WALKWAYS
ZONE (1008)
Z8-CHQ055

Project Code	Rubric	Initiator	Lot	Ref	Number	Revision
9 3 M	0 4 7 6	A C C	6 0 D E P	D W G	0 8 6 1 0	B

Tekla structures

approval is subject to approval of coordination package between multi-discipline

REVIEWED WITH COMMENT MONORAILS PROJECT

All holes are 22mm U.N.O Length & Area & Weight per piece						
Z8-CHQ054	CHQD5*1103.4	S235JR	1	1585.4	3.30	64.0
Mark	Profile	Grade	QTY	Length	Area	Weight

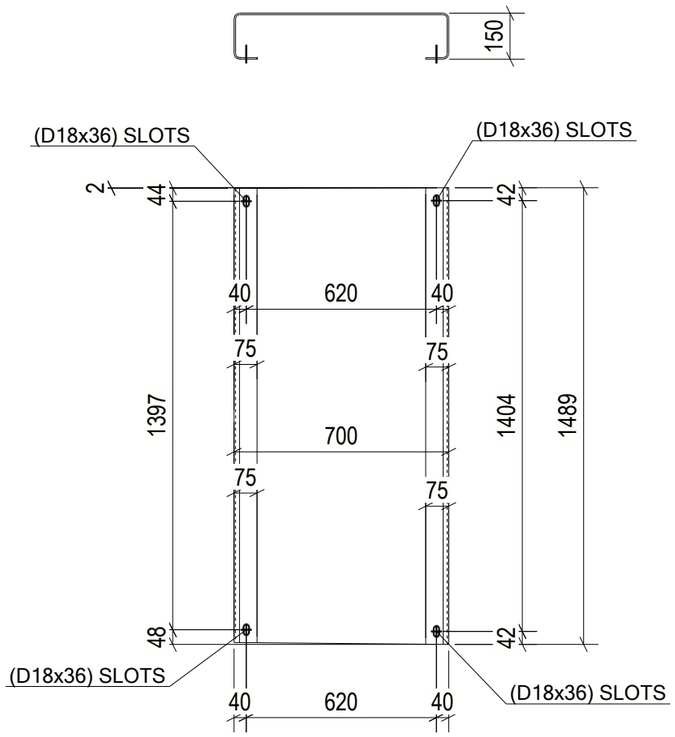

1 REQ'D AS DRAWN MK'D Z8-CHQ054

6 October Monorail Engineering Unit Valid For Construction

GENERAL NOTES:

1. THE DIMENSIONS SHOWN ARE NOMINAL (IN MILLIMETERS), U.N.O.
2. WELD SIZESHALL BE AISC MINIMUM OF 6 mm UNLESS NOTED OTHERWISE.
3. ALL FIELD WELDS SHALL BE INSPECTED PER QUALITY ASSURANCE AND SPECIAL INSPECTIONS.

REFERENCE DRAWINGS

1	93M-BOA-NAT-LOT-04833
2	93M-BOA-NAT-LOT-09170
3	93M-BOA-NAT-LOT-01976
4	93M-BOA-NAT-LOT-20021
5	
6	
7	
8	
9	

6TH OF OCTOBER CITY RAIL TRANSIT MONORAIL

The Authority | Hill International Consultant | ORASCOM BOMBARDIER Main Contractor | INNOVA Structural Designer

KEY PLAN:

SCALE	SHOP DRAWING	DATE
AS SHOWN		12/05/2023

REV	DATE	DSG	CHK	APP	AMENDMENTS	STATUS
B	12/05/2023	M.KH	M.KH	DR.M.M	ISSUED FOR INFORMATION	IFI

DRAWING TITLE

6TH OF OCTOBER MONORAIL SERVICE WALKWAYS ZONE (1008) Z8-CHQ054

Project Code	Rubric	Initiator	Lot	Ref	Number	Revision
93M	0476	ACC	60DEP	DWG	08611	B

Tekla structures

approval is subject to approval of coordination package between multi-discipline

REVIEWED WITH COMMENT MONORAILS PROJECT

All holes are 22mm U.N.O Length & Area & Weight per piece						
Z8-CHQ053	CHQD5*1103.4	S235JR	1	3090.8	6.63	129.0
Mark	Profile	Grade	QTY	Length	Area	Weight

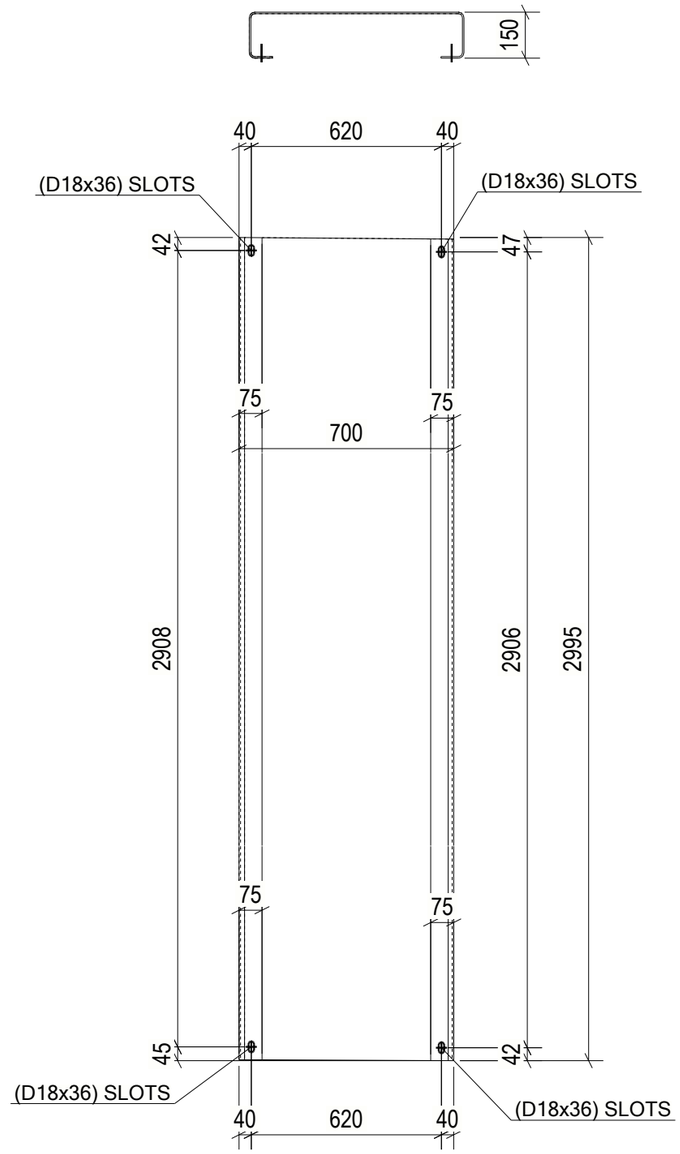

1 REQ'D AS DRAWN MK'D Z8-CHQ053

6 October Monorail Engineering Unit Valid For Construction

GENERAL NOTES:

1. THE DIMENSIONS SHOWN ARE NOMINAL (IN MILLIMETERS), U.N.O.
2. WELD SIZESHALL BE AISC MINIMUM OF 6 mm UNLESS NOTED OTHERWISE.
3. ALL FIELD WELDS SHALL BE INSPECTED PER QUALITY ASSURANCE AND SPECIAL INSPECTIONS.

REFERENCE DRAWINGS

1	93M-BOA-NAT-LOT-04833
2	93M-BOA-NAT-LOT-09170
3	93M-BOA-NAT-LOT-01976
4	93M-BOA-NAT-LOT-20021
5	
6	
7	
8	
9	

6TH OF OCTOBER CITY RAIL TRANSIT MONORAIL

The Authority | Hill International Consultant | ORASCOM BOMBARDIER Main Contractor | INNOVA Structural Designer

KEY PLAN:

SCALE	SHOP DRAWING	DATE
AS SHOWN		12/05/2023

REV	DATE	DSN	CHK	APP	AMENDMENTS	STATUS
B	12/05/2023	M.KH	M.KH	DR.M.M	ISSUED FOR INFORMATION	IFI

DRAWING TITLE

6TH OF OCTOBER MONORAIL SERVICE WALKWAYS ZONE (1008) Z8-CHQ053

Project Code	Rubric	Initiator	Lot	Ref	Number	Revision
93M	0476	ACC	60DEP	DWG	08612	B

Tekla structures

approval is subject to approval of coordination package between multi-discipline

REVIEWED WITH COMMENT MONORAILS PROJECT

All holes are 22mm U.N.O Length & Area & Weight per piece						
Z8-CHQ052	CHQD5*1103.4	S235JR	1	3090.7	6.63	129.0
Mark	Profile	Grade	QTY	Length	Area	Weight

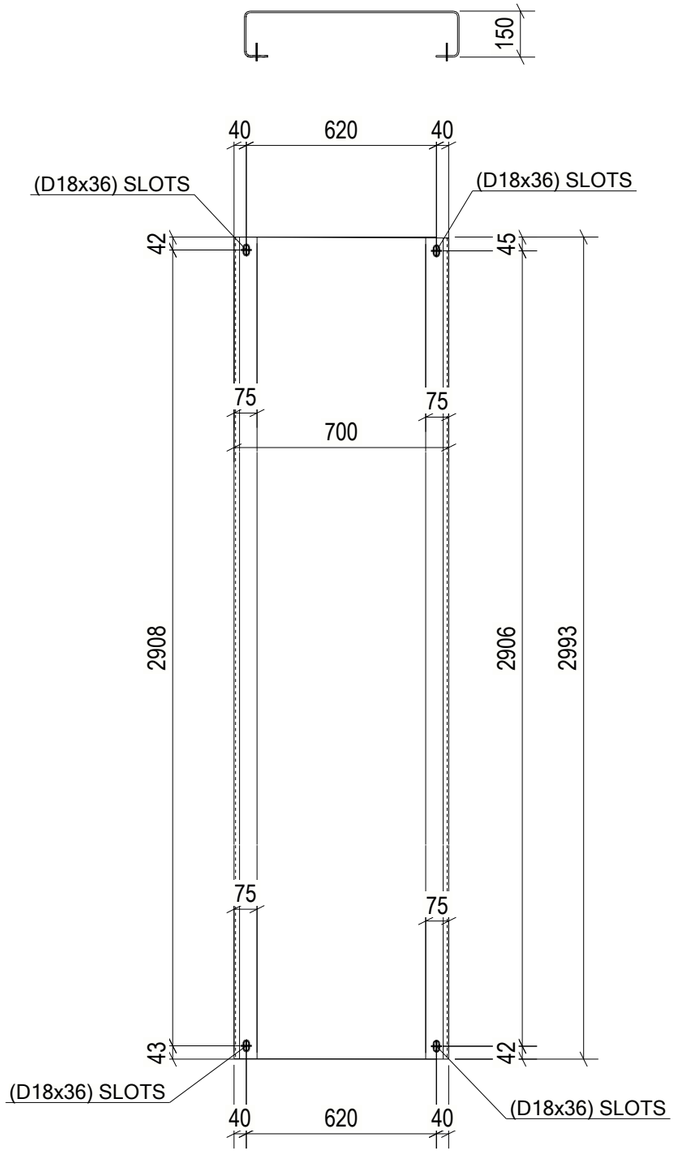

1 REQ'D AS DRAWN MK'D Z8-CHQ052

6 October Monorail Engineering Unit Valid For Construction

GENERAL NOTES:

1. THE DIMENSIONS SHOWN ARE NOMINAL (IN MILLIMETERS), U.N.O.
2. WELD SIZESHALL BE AISC MINIMUM OF 6 mm UNLESS NOTED OTHERWISE.
3. ALL FIELD WELDS SHALL BE INSPECTED PER QUALITY ASSURANCE AND SPECIAL INSPECTIONS.

REFERENCE DRAWINGS

1	93M-BOA-NAT-LOT-04833
2	93M-BOA-NAT-LOT-09170
3	93M-BOA-NAT-LOT-01976
4	93M-BOA-NAT-LOT-20021
5	
6	
7	
8	
9	

6TH OF OCTOBER CITY RAIL TRANSIT MONORAIL

The Authority | Hill International Consultant | ORASCOM BOMBARDIER Main Contractor | INNOVA Structural Designer

KEY PLAN:

SCALE	SHOP DRAWING	DATE
AS SHOWN		12/05/2023

REV	DATE	DSN	CHK	APP	AMENDMENTS	STATUS
B	12/05/2023	M.KH	M.KH	DR.M.M	ISSUED FOR INFORMATION	IFI

DRAWING TITLE

6TH OF OCTOBER MONORAIL SERVICE WALKWAYS ZONE (1008) Z8-CHQ052

Project Code	Rubric	Initiator	Lot	Ref	Number	Revision
93M	0476	ACC	60DEP	DWG	08613	B

Tekla structures

approval is subject to approval of coordination package between multi-discipline

REVIEWED WITH COMMENT MONORAILS PROJECT

All holes are 22mm U.N.O Length & Area & Weight per piece						
Z8-CHQ051	CHQD5*1103.4	S235JR	1	3089.5	6.63	129.0
Mark	Profile	Grade	QTY	Length	Area	Weight

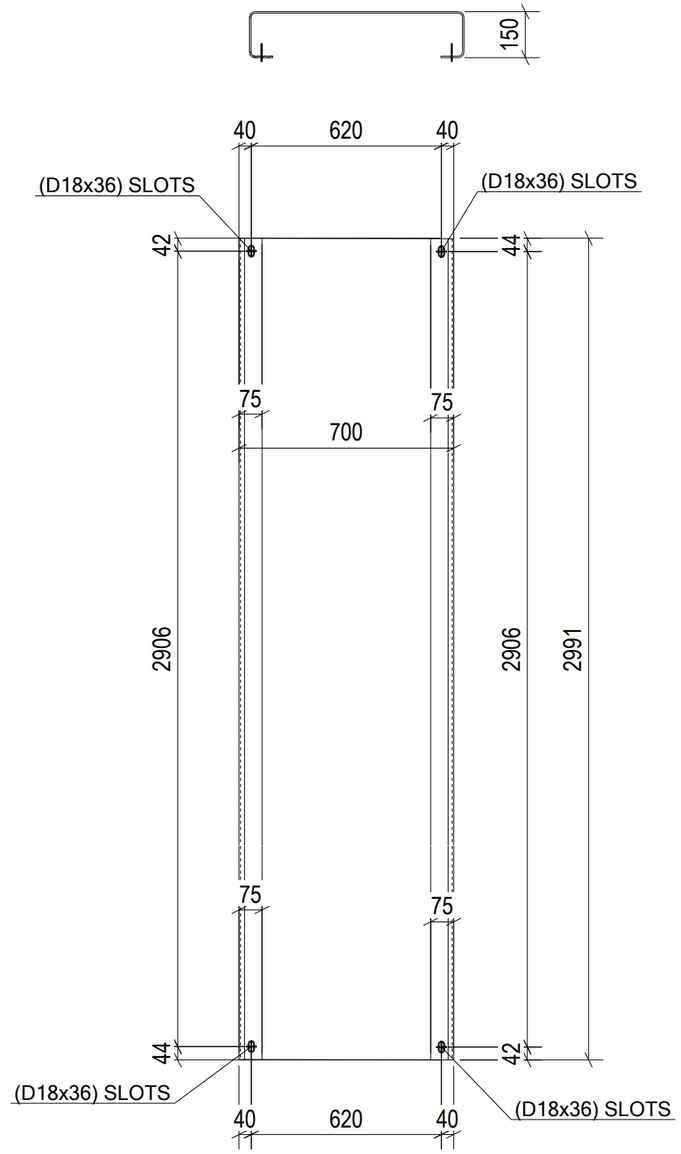

1 REQ'D AS DRAWN MK'D Z8-CHQ051

6 October Monorail Engineering Unit Valid For Construction

GENERAL NOTES:

1. THE DIMENSIONS SHOWN ARE NOMINAL (IN MILLIMETERS), U.N.O.
2. WELD SIZESHALL BE AISC MINIMUM OF 6 mm UNLESS NOTED OTHERWISE.
3. ALL FIELD WELDS SHALL BE INSPECTED PER QUALITY ASSURANCE AND SPECIAL INSPECTIONS.

REFERENCE DRAWINGS

1	93M-BOA-NAT-LOT-04833
2	93M-BOA-NAT-LOT-09170
3	93M-BOA-NAT-LOT-01976
4	93M-BOA-NAT-LOT-20021
5	
6	
7	
8	
9	

6TH OF OCTOBER CITY RAIL TRANSIT MONORAIL

The Authority | Hill International Consultant | ORASCOM BOMBARDIER Main Contractor | INNOVA Structural Designer

KEY PLAN:

SCALE	SHOP DRAWING	DATE
AS SHOWN		12/05/2023

REV	DATE	DSN	CHK	APP	AMENDMENTS	STATUS
B	12/05/2023	M.KH	M.KH	DR.M.M	ISSUED FOR INFORMATION	IFI

DRAWING TITLE

6TH OF OCTOBER MONORAIL SERVICE WALKWAYS ZONE (1008) Z8-CHQ051

Project Code	Rubric	Initiator	Lot	Ref	Number	Revision
93M	0476	ACC	60DEP	DWG	08614	B

Tekla structures

approval is subject to approval of coordination package between multi-discipline

REVIEWED WITH COMMENT
MONORAILS PROJECT

All holes are 22mm U.N.O Length & Area & Weight per piece						
Z8-CHQ050	CHQD5*1103.4	S235JR	13	3090.1	6.63	129.0
Mark	Profile	Grade	QTY	Length	Area	Weight

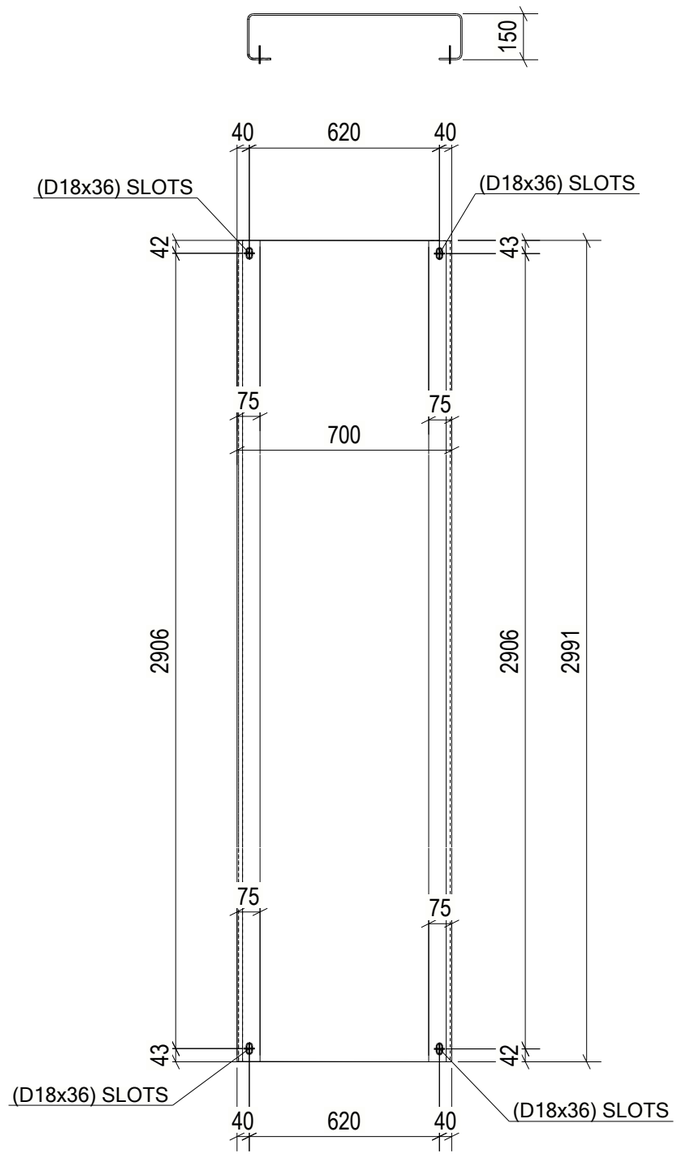

13 REQ'D AS DRAWN MK'D Z8-CHQ050

6 October Monorail
Engineering Unit
Valid For Construction

GENERAL NOTES:

1. THE DIMENSIONS SHOWN ARE NOMINAL (IN MILLIMETERS), U.N.O.
2. WELD SIZESHALL BE AISC MINIMUM OF 6 mm UNLESS NOTED OTHERWISE.
3. ALL FIELD WELDS SHALL BE INSPECTED PER QUALITY ASSURANCE AND SPECIAL INSPECTIONS.

REFERENCE DRAWINGS

1	93M-BOA-NAT-LOT-04833
2	93M-BOA-NAT-LOT-09170
3	93M-BOA-NAT-LOT-01976
4	93M-BOA-NAT-LOT-20021
5	
6	
7	
8	
9	

6TH OF OCTOBER CITY RAIL TRANSIT MONORAIL

The Authority | Consultant: Hill International | Main Contractor: ORASCOM CONSTRUCTION / BOMBARDIER | Structural Designer: INNOVA TRANSPORTATION

KEY PLAN:

SCALE	SHOP DRAWING	DATE
AS SHOWN		12/05/2023

REV	DATE	DSN	CHK	APP	AMENDMENTS	STATUS
B	12/05/2023	M.KH	M.KH	DR.M.M	ISSUED FOR INFORMATION	IFI

DRAWING TITLE
6TH OF OCTOBER MONORAIL
SERVICE WALKWAYS
ZONE (1008)
Z8-CHQ050

Project Code	Rubric	Initiator	Lot	Ref	Number	Revision
9 3 M	0 4 7 6	A C C	6 0 D E P	D W G	0 8 6 1 5	B

Tekla structures

approval is subject to approval of coordination package between multi-discipline

REVIEWED WITH COMMENT
MONORAILS PROJECT

All holes are 22mm U.N.O Length & Area & Weight per piece

Mark	Profile	Grade	QTY	Length	Area	Weight
Z8-CHQ049	CHQD5*1103.4	S235JR	4	3088.9	6.63	128.9

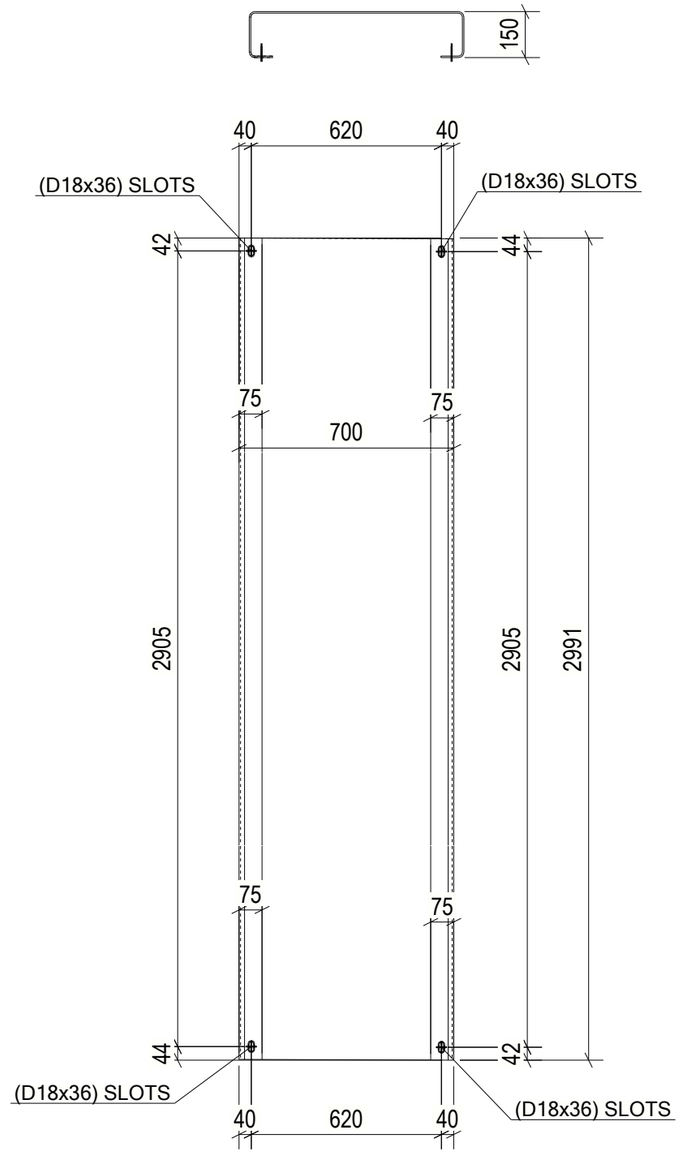

4 REQ'D AS DRAWN MK'D Z8-CHQ049

6 October Monorail
Engineering Unit
Valid For Construction

GENERAL NOTES:

1. THE DIMENSIONS SHOWN ARE NOMINAL (IN MILLIMETERS), U.N.O.
2. WELD SIZESHALL BE AISC MINIMUM OF 6 mm UNLESS NOTED OTHERWISE.
3. ALL FIELD WELDS SHALL BE INSPECTED PER QUALITY ASSURANCE AND SPECIAL INSPECTIONS.

REFERENCE DRAWINGS

1	93M-BOA-NAT-LOT-04833
2	93M-BOA-NAT-LOT-09170
3	93M-BOA-NAT-LOT-01976
4	93M-BOA-NAT-LOT-20021
5	
6	
7	
8	
9	

6TH OF OCTOBER CITY RAIL TRANSIT MONORAIL

The Authority | Consultant: Hill International | Main Contractor: ORASCOM CONSTRUCTION, BOMBARDIER | Structural Designer: INNOVA TRANSPORTATION

KEY PLAN:

SCALE	SHOP DRAWING	DATE
AS SHOWN		12/05/2023

REV	DATE	DSN	CHK	APP	AMENDMENTS	STATUS
B	12/05/2023	M.KH	M.KH	DR.M.M	ISSUED FOR INFORMATION	IFI

DRAWING TITLE
6TH OF OCTOBER MONORAIL
SERVICE WALKWAYS
ZONE (1008)
Z8-CHQ049

Project Code	Rubric	Initiator	Lot	Ref	Number	Revision
9 3 M	0 4 7 6	A C C	6 0 D E P	D W G	0 8 6 1 6	B

Tekla structures

approval is subject to approval of coordination package between multi-discipline

REVIEWED WITH COMMENT
MONORAILS PROJECT

All holes are 22mm U.N.O Length & Area & Weight per piece						
Z8-CHQ048	CHQD5*1103.4	S235JR	1	3092.6	6.64	129.1
Mark	Profile	Grade	QTY	Length	Area	Weight

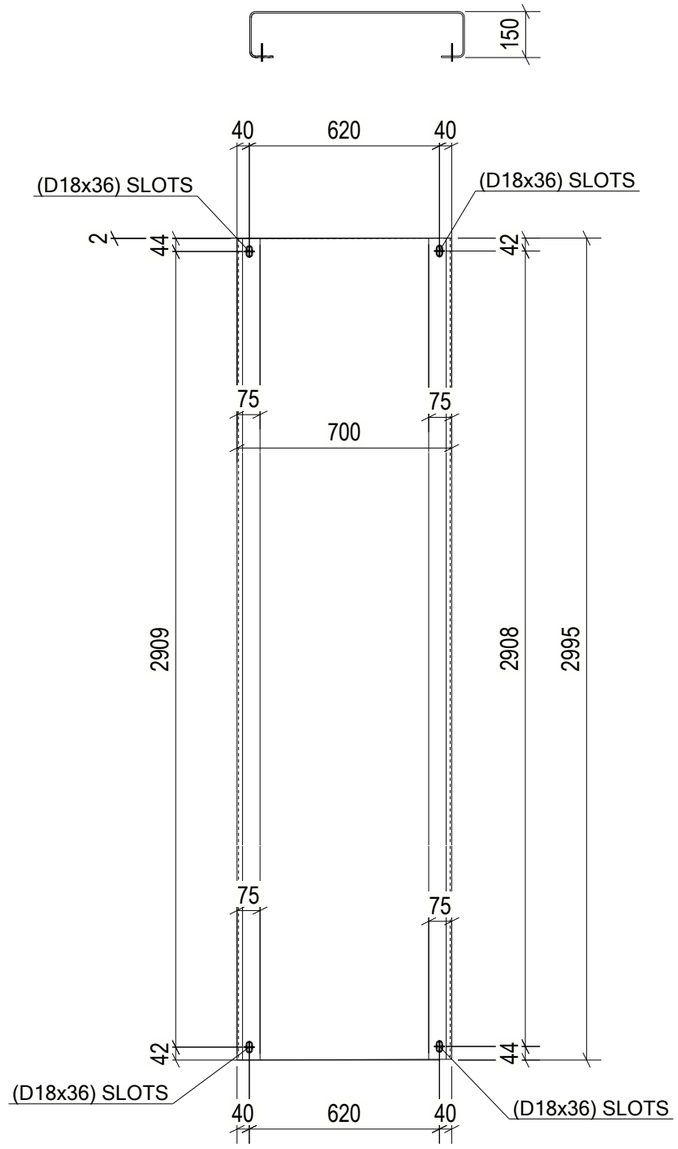

1 REQ'D AS DRAWN MK'D Z8-CHQ048

6 October Monorail Engineering Unit Valid For Construction

GENERAL NOTES:

1. THE DIMENSIONS SHOWN ARE NOMINAL (IN MILLIMETERS), U.N.O.
2. WELD SIZESHALL BE AISC MINIMUM OF 6 mm UNLESS NOTED OTHERWISE.
3. ALL FIELD WELDS SHALL BE INSPECTED PER QUALITY ASSURANCE AND SPECIAL INSPECTIONS.

REFERENCE DRAWINGS

1	93M-BOA-NAT-LOT-04833
2	93M-BOA-NAT-LOT-09170
3	93M-BOA-NAT-LOT-01976
4	93M-BOA-NAT-LOT-20021
5	
6	
7	
8	
9	

6TH OF OCTOBER CITY RAIL TRANSIT MONORAIL

The Authority | Consultant: Hill International | Main Contractor: ORASCOM CONSTRUCTION, Six Construct, BOMBARDIER | Structural Designer: INNOVA TRANSPORTATION

KEY PLAN:

SCALE	SHOP DRAWING	DATE
AS SHOWN		12/05/2023

REV	DATE	DSN	CHK	APP	AMENDMENTS	STATUS
B	12/05/2023	M.KH	M.KH	DR.M.M	ISSUED FOR INFORMATION	IFI
A	11/05/2023	M.KH	M.KH	DR.M.M	ISSUED FOR INFORMATION	IFI

DRAWING TITLE

6TH OF OCTOBER MONORAIL
SERVICE WALKWAYS
ZONE (1008)
Z8-CHQ048

Project Code	Rubric	Initiator	Lot	Ref	Number	Revision
9 3 M	0 4 7 6	A C C	6 0 D E P	D W G	0 8 6 1 7	B

Tekla structures

approval is subject to approval of coordination package between multi-discipline

REVIEWED WITH COMMENT MONORAILS PROJECT

All holes are 22mm U.N.O Length & Area & Weight per piece						
Z8-CHQ047	CHQD5*1103.4	S235JR	1	2038.2	4.31	83.7
Mark	Profile	Grade	QTY	Length	Area	Weight

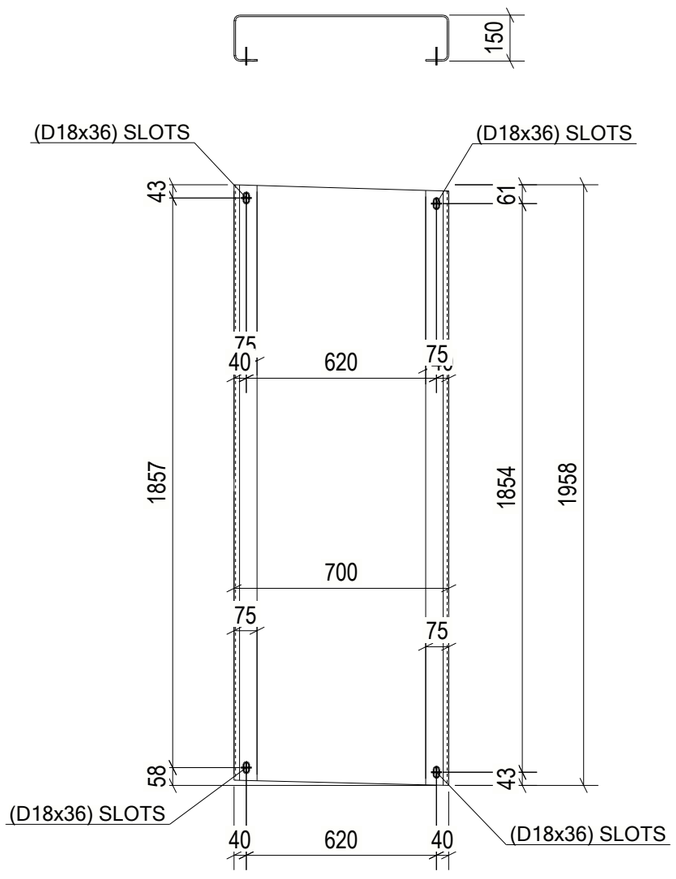

1 REQ'D AS DRAWN MK'D Z8-CHQ047

6 October Monorail Engineering Unit
Valid For Construction

GENERAL NOTES:

1. THE DIMENSIONS SHOWN ARE NOMINAL (IN MILLIMETERS), U.N.O.
2. WELD SIZESHALL BE AISC MINIMUM OF 6 mm UNLESS NOTED OTHERWISE.
3. ALL FIELD WELDS SHALL BE INSPECTED PER QUALITY ASSURANCE AND SPECIAL INSPECTIONS.

REFERENCE DRAWINGS

1	93M-BOA-NAT-LOT-04833
2	93M-BOA-NAT-LOT-09170
3	93M-BOA-NAT-LOT-01976
4	93M-BOA-NAT-LOT-20021
5	
6	
7	
8	
9	

6TH OF OCTOBER CITY RAIL TRANSIT MONORAIL

The Authority | Hill International Consultant | ORASCOM BOMBARDIER Main Contractor | INNOVA Structural Designer

KEY PLAN:

SCALE	SHOP DRAWING	DATE
AS SHOWN		12/05/2023

REV	DATE	DSG	CHK	APP	AMENDMENTS	STATUS
B	12/05/2023	M.KH	M.KH	DR.M.M	ISSUED FOR INFORMATION	IFI

DRAWING TITLE

6TH OF OCTOBER MONORAIL SERVICE WALKWAYS ZONE (1008)
Z8-CHQ047

Project Code	Rubric	Initiator	Lot	Ref	Number	Revision
93M	0476	ACC	60DEP	DWG	08618	B

Tekla structures

approval is subject to approval of coordination package between multi-discipline

REVIEWED WITH COMMENT
MONORAILS PROJECT

All holes are 22mm U.N.O Length & Area & Weight per piece						
Z8-CHQ046	CHQD5*1103.4	S235JR	1	2039.5	4.31	83.7
Mark	Profile	Grade	QTY	Length	Area	Weight

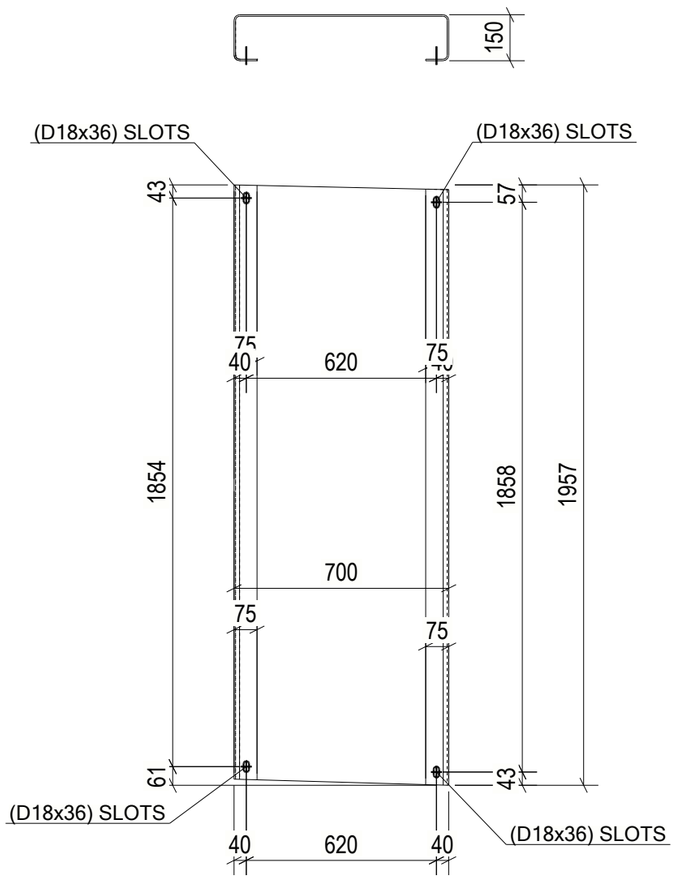

1 REQ'D AS DRAWN MK'D Z8-CHQ046

6 October Monorail
Engineering Unit
Valid For Construction

GENERAL NOTES:

1. THE DIMENSIONS SHOWN ARE NOMINAL (IN MILLIMETERS), U.N.O.
2. WELD SIZESHALL BE AISC MINIMUM OF 6 mm UNLESS NOTED OTHERWISE.
3. ALL FIELD WELDS SHALL BE INSPECTED PER QUALITY ASSURANCE AND SPECIAL INSPECTIONS.

REFERENCE DRAWINGS

1	93M-BOA-NAT-LOT-04833
2	93M-BOA-NAT-LOT-09170
3	93M-BOA-NAT-LOT-01976
4	93M-BOA-NAT-LOT-20021
5	
6	
7	
8	
9	

6TH OF OCTOBER CITY RAIL TRANSIT MONORAIL

The Authority | Hill International Consultant | ORASCOM BOMBARDIER Main Contractor | INNOVA Structural Designer

KEY PLAN:

SCALE: AS SHOWN | SHOP DRAWING | DATE: 12/05/2023

REV	DATE	DSN	CHK	APP	AMENDMENTS DESCRIPTION	STATUS
B	12/05/2023	M.KH	M.KH	DR.M.M	ISSUED FOR INFORMATION	IFI
A	17/04/2023	D.SS	C.HK	APP.	AMENDMENTS DESCRIPTION	STATUS

DRAWING TITLE
6TH OF OCTOBER MONORAIL
SERVICE WALKWAYS
ZONE (1008)
Z8-CHQ046

Project Code	Rubric	Initiator	Lot	Ref	Number	Revision
9 3	M 0 4 7 6	A C C	6 0 D E	P D W G	0 8 6 1 9	B

Tekla structures

approval is subject to approval of coordination package between multi-discipline

REVIEWED WITH COMMENT
MONORAILS PROJECT

All holes are 22mm U.N.O Length & Area & Weight per piece

Mark	Profile	Grade	QTY	Length	Area	Weight
Z8-CHQ045	CHQD5*1103.4	S235JR	1	3076.5	6.61	128.5

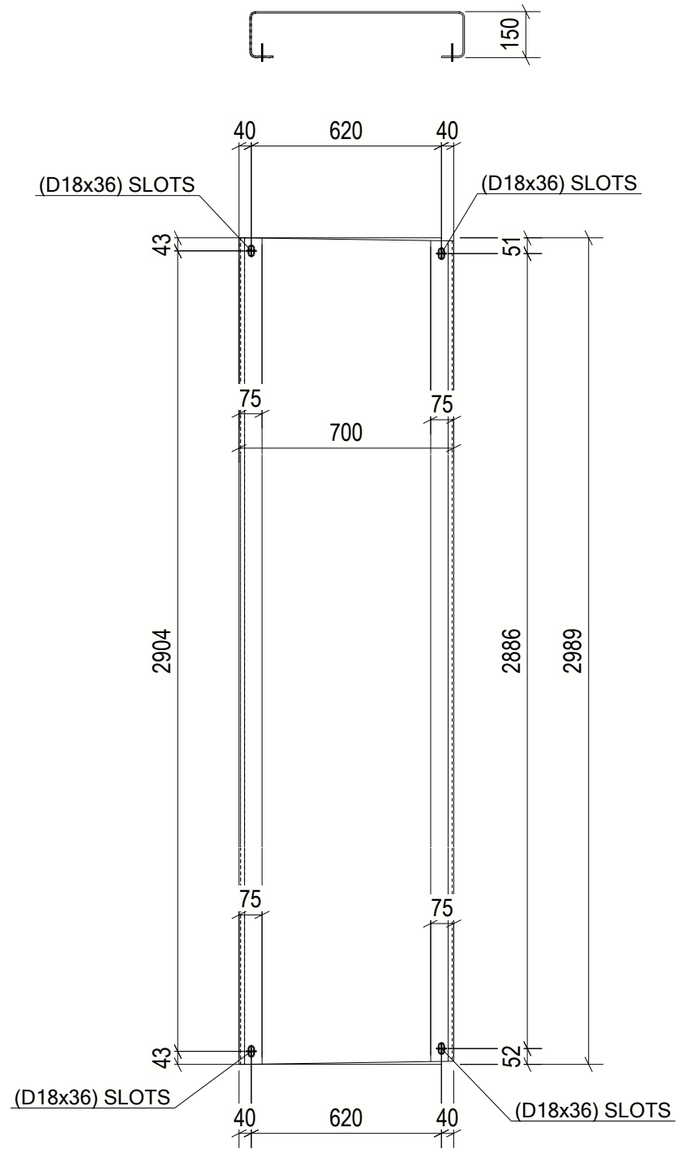

1 REQ'D AS DRAWN MK'D Z8-CHQ045

GENERAL NOTES:

1. THE DIMENSIONS SHOWN ARE NOMINAL (IN MILLIMETERS), U.N.O.
2. WELD SIZESHALL BE AISC MINIMUM OF 6 mm UNLESS NOTED OTHERWISE.
3. ALL FIELD WELDS SHALL BE INSPECTED PER QUALITY ASSURANCE AND SPECIAL INSPECTIONS.

REFERENCE DRAWINGS

1	93M-BOA-NAT-LOT-04833
2	93M-BOA-NAT-LOT-09170
3	93M-BOA-NAT-LOT-01976
4	93M-BOA-NAT-LOT-20021
5	
6	
7	
8	
9	

6TH OF OCTOBER CITY RAIL TRANSIT MONORAIL

The Authority | Consultant: Hill International | Main Contractor: ORASCOM CONSTRUCTION, BOMBARDIER | Structural Designer: INNOVA TRANSPORTATION

KEY PLAN:

6 October Monorail Engineering Unit Valid For Construction

SCALE	SHOP DRAWING	DATE
AS SHOWN		12/05/2023

REV	DATE	DSN	CHK	APP	AMENDMENTS	STATUS
B	12/05/2023	M.KH	M.KH	DR.M.M	ISSUED FOR INFORMATION	IFI
A	11/04/2023	M.KH	M.KH	DR.M.M	ISSUED FOR INFORMATION	IFI

DRAWING TITLE
6TH OF OCTOBER MONORAIL
SERVICE WALKWAYS
ZONE (1008)
Z8-CHQ045

Project Code	Rubric	Initiator	Lot	Ref	Number	Revision
9 3 M	0 4 7 6	A C C	6 0 D E P	D W G	0 8 6 2 0	B

Tekla structures

approval is subject to approval of coordination package between multi-discipline

REVIEWED WITH COMMENT
MONORAILS PROJECT

All holes are 22mm U.N.O Length & Area & Weight per piece						
Z8-CHQ044	CHQD5*1103.4	S235JR	1	2220.3	4.71	91.5
Mark	Profile	Grade	QTY	Length	Area	Weight

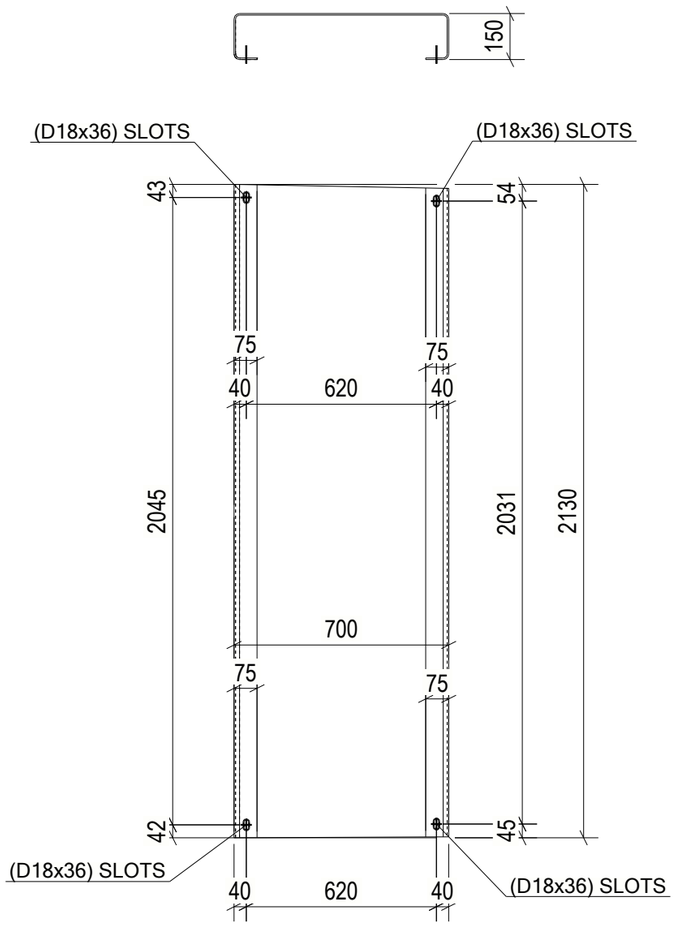

1 REQ'D AS DRAWN MK'D Z8-CHQ044

6 October Monorail Engineering Unit Valid For Construction

GENERAL NOTES:

1. THE DIMENSIONS SHOWN ARE NOMINAL (IN MILLIMETERS), U.N.O.
2. WELD SIZESHALL BE AISC MINIMUM OF 6 mm UNLESS NOTED OTHERWISE.
3. ALL FIELD WELDS SHALL BE INSPECTED PER QUALITY ASSURANCE AND SPECIAL INSPECTIONS.

REFERENCE DRAWINGS

1	93M-BOA-NAT-LOT-04833
2	93M-BOA-NAT-LOT-09170
3	93M-BOA-NAT-LOT-01976
4	93M-BOA-NAT-LOT-20021
5	
6	
7	
8	
9	

6TH OF OCTOBER CITY RAIL TRANSIT MONORAIL

The Authority — Hill International Consultant — Main Contractor — Structural Designer

KEY PLAN:

SCALE	SHOP DRAWING	DATE
AS SHOWN		12/05/2023

REV	DATE	DES.	CHK.	APP.	AMENDMENTS	STATUS
B	12/05/2023	M.KH	M.KH	DR.M.M	ISSUED FOR INFORMATION	IFI
A	17/04/2022	D.SS	CHK.	APP.	AMENDMENTS	STATUS

DRAWING TITLE

6TH OF OCTOBER MONORAIL SERVICE WALKWAYS ZONE (1008)
Z8-CHQ044

Project Code	Rubric	Initiator	Lot	Ref	Number	Revision
9 3 M	0 4 7 6	A C C	6 0 D E P	D W G	0 8 6 2 1	B

Tekla structures

approval is subject to approval of coordination package between multi-discipline

REVIEWED WITH COMMENT
MONORAILS PROJECT

All holes are 22mm U.N.O Length & Area & Weight per piece						
Z8-CHQ043	CHQD5*1103.4	S235JR	1	2218.1	4.70	91.4
Mark	Profile	Grade	QTY	Length	Area	Weight

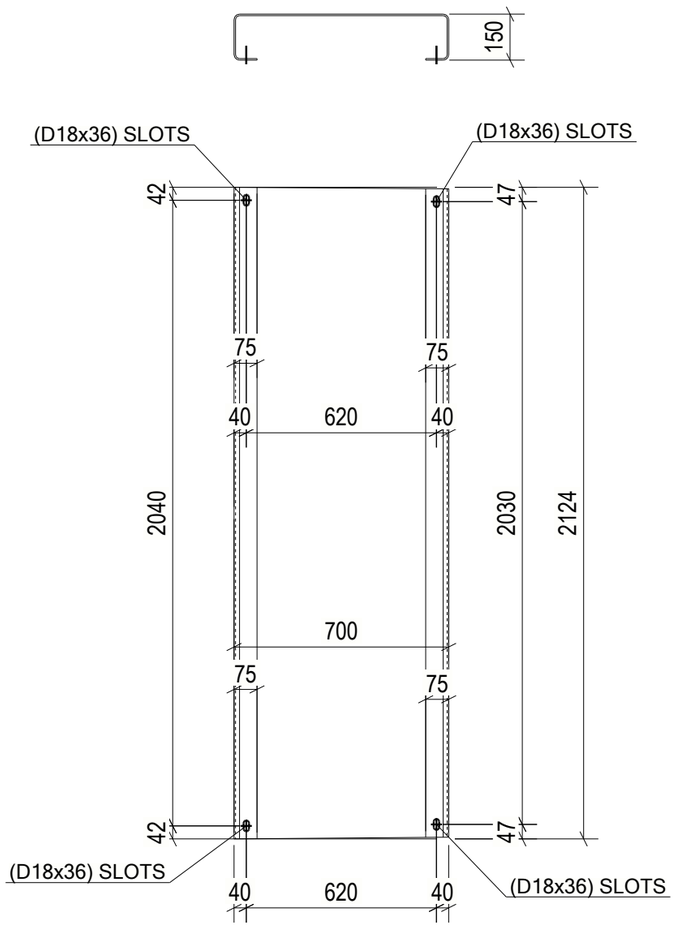

1 REQ'D AS DRAWN MK'D Z8-CHQ043

6 October Monorail Engineering Unit Valid For Construction

GENERAL NOTES:

1. THE DIMENSIONS SHOWN ARE NOMINAL (IN MILLIMETERS), U.N.O.
2. WELD SIZESHALL BE AISC MINIMUM OF 6 mm UNLESS NOTED OTHERWISE.
3. ALL FIELD WELDS SHALL BE INSPECTED PER QUALITY ASSURANCE AND SPECIAL INSPECTIONS.

REFERENCE DRAWINGS

1	93M-BOA-NAT-LOT-04833
2	93M-BOA-NAT-LOT-09170
3	93M-BOA-NAT-LOT-01976
4	93M-BOA-NAT-LOT-20021
5	
6	
7	
8	
9	

6TH OF OCTOBER CITY RAIL TRANSIT MONORAIL

The Authority | Consultant: Hill International | Main Contractor: ORASCOM CONSTRUCTION / BOMBARDIER | Structural Designer: INNOVA

KEY PLAN:

SCALE: AS SHOWN | SHOP DRAWING | DATE: 12/05/2023

REV	DATE	DRS	CHK	APP	AMENDMENTS	STATUS
B	12/05/2023	M.KH	M.KH	DR.M.M	ISSUED FOR INFORMATION	IFI

DRAWING TITLE
6TH OF OCTOBER MONORAIL
SERVICE WALKWAYS
ZONE (1008)
Z8-CHQ043

Project Code	Rubric	Initiator	Lot	Ref	Number	Revision
93M	047	ACC	60	DEP	DWG	08222	B

Tekla structures

approval is subject to approval of coordination package between multi-discipline

REVIEWED WITH COMMENT
MONORAILS PROJECT

All holes are 22mm U.N.O Length & Area & Weight per piece						
Z8-CHQ042	CHQD5*1103.4	S235JR	1	3077.7	6.61	128.6
Mark	Profile	Grade	QTY	Length	Area	Weight

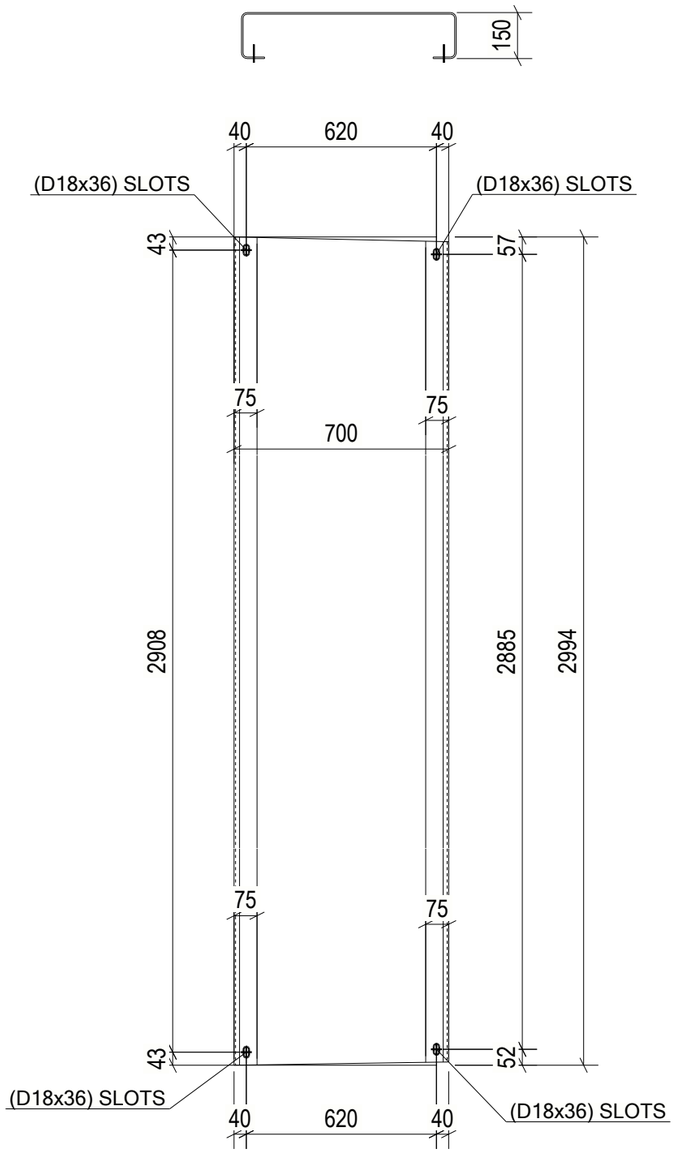

1 REQ'D AS DRAWN MK'D Z8-CHQ042

6 October Monorail Engineering Unit Valid For Construction

GENERAL NOTES:

1. THE DIMENSIONS SHOWN ARE NOMINAL (IN MILLIMETERS), U.N.O.
2. WELD SIZESHALL BE AISC MINIMUM OF 6 mm UNLESS NOTED OTHERWISE.
3. ALL FIELD WELDS SHALL BE INSPECTED PER QUALITY ASSURANCE AND SPECIAL INSPECTIONS.

REFERENCE DRAWINGS

1	93M-BOA-NAT-LOT-04833
2	93M-BOA-NAT-LOT-09170
3	93M-BOA-NAT-LOT-01976
4	93M-BOA-NAT-LOT-20021
5	
6	
7	
8	
9	

6TH OF OCTOBER CITY RAIL TRANSIT MONORAIL

The Authority | Hill International (Consultant) | Main Contractor | Structural Designer

KEY PLAN:

SCALE	SHOP DRAWING	DATE
AS SHOWN		12/05/2023

REV.	DATE	DRN	CHK	APP.	AMENDMENTS	STATUS
B	12/05/2023	M.KH	M.KH	DR.M.M	ISSUED FOR INFORMATION	IFI

DRAWING TITLE

6TH OF OCTOBER MONORAIL
SERVICE WALKWAYS
ZONE (1008)
Z8-CHQ042

Project Code	Rubric	Initiator	Lot	Ref	Number	Revision
9 3	M 0 4 7 6	A C C	6 0 D E P	D W G	0 8 6 2 3	B

Tekla structures

approval is subject to approval of coordination package between multi-discipline

REVIEWED WITH COMMENT
MONORAILS PROJECT

All holes are 22mm U.N.O Length & Area & Weight per piece						
Z8-CHQ041	CHQD5*1103.4	S235JR	1	3090.3	6.63	129.0
Mark	Profile	Grade	QTY	Length	Area	Weight

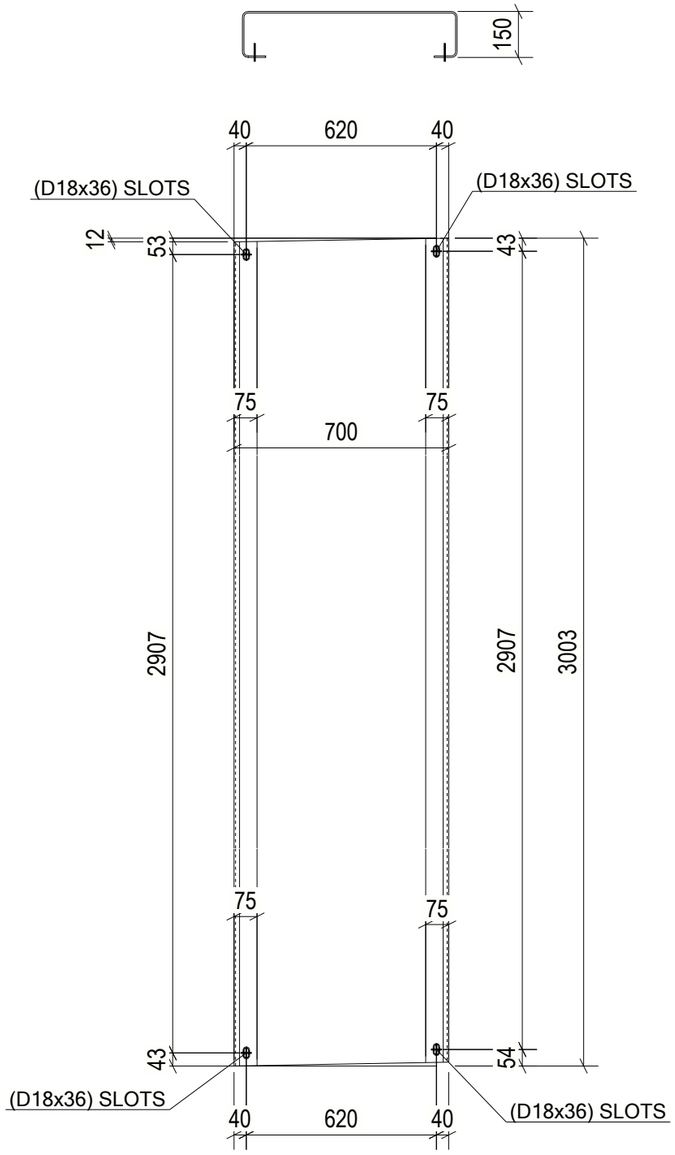

1 REQ'D AS DRAWN MK'D Z8-CHQ041

GENERAL NOTES:

1. THE DIMENSIONS SHOWN ARE NOMINAL (IN MILLIMETERS), U.N.O.
2. WELD SIZESHALL BE AISC MINIMUM OF 6 mm UNLESS NOTED OTHERWISE.
3. ALL FIELD WELDS SHALL BE INSPECTED PER QUALITY ASSURANCE AND SPECIAL INSPECTIONS.

REFERENCE DRAWINGS

1	93M-BOA-NAT-LOT-04833
2	93M-BOA-NAT-LOT-09170
3	93M-BOA-NAT-LOT-01976
4	93M-BOA-NAT-LOT-20021
5	
6	
7	
8	
9	

6TH OF OCTOBER CITY RAIL TRANSIT MONORAIL

The Authority | Consultant: Hill International | Main Contractor: ORASCOM CONSTRUCTION, BOMBARDIER | Structural Designer: INNOVA TRANSPORTATION

KEY PLAN:

6 October Monorail
Engineering Unit
Valid For Construction

SCALE	SHOP DRAWING	DATE
AS SHOWN		12/05/2023

REV	DATE	DSN	CHK	APP	AMENDMENTS	STATUS
B	12/05/2023	M.KH	M.KH	DR.M.M	ISSUED FOR INFORMATION	IFI

DRAWING TITLE
6TH OF OCTOBER MONORAIL
SERVICE WALKWAYS
ZONE (1008)
Z8-CHQ041

Project Code	Rubric	Initiator	Lot	Ref	Number	Revision
9 3 M	0 4 7 6	A C C	6 0 D E P	D W G	0 8 6 2 4	B

Tekla structures

approval is subject to approval of coordination package between multi-discipline

REVIEWED WITH COMMENT
MONORAILS PROJECT

All holes are 22mm U.N.O Length & Area & Weight per piece

Mark	Profile	Grade	QTY	Length	Area	Weight
Z8-CHQ040	CHQD5*1103.4	S235JR	1	3088.5	6.63	128.9

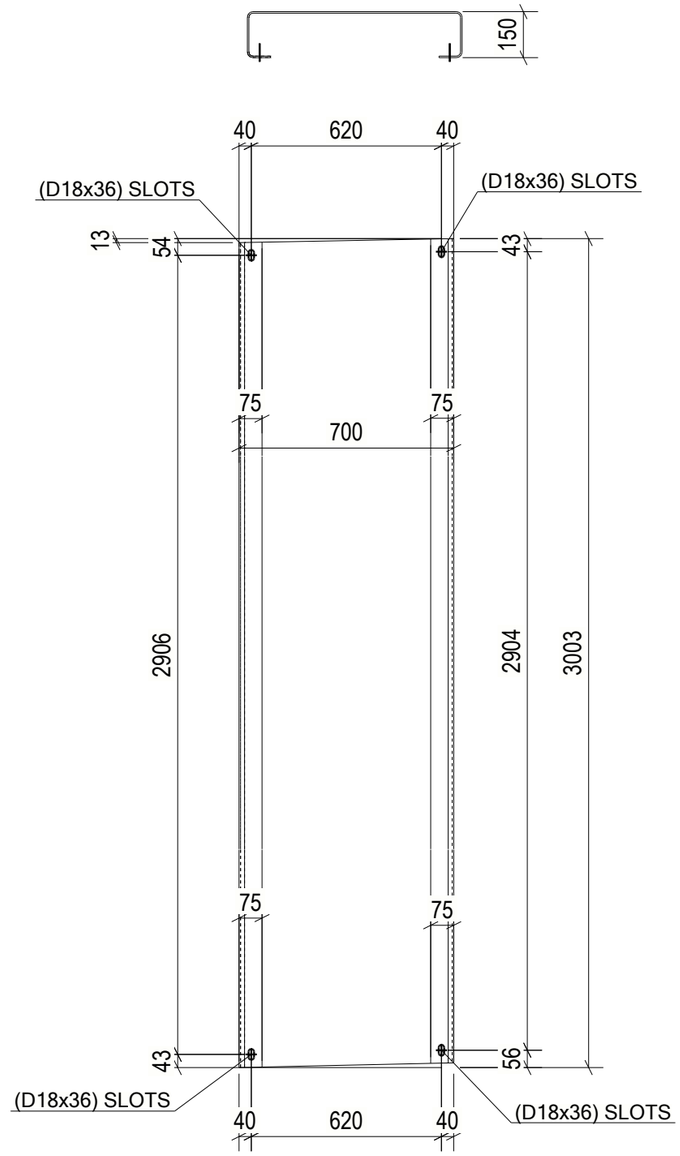

1 REQ'D AS DRAWN MK'D Z8-CHQ040

6 October Monorail Engineering Unit Valid For Construction

GENERAL NOTES:

1. THE DIMENSIONS SHOWN ARE NOMINAL (IN MILLIMETERS), U.N.O.
2. WELD SIZESHALL BE AISC MINIMUM OF 6 mm UNLESS NOTED OTHERWISE.
3. ALL FIELD WELDS SHALL BE INSPECTED PER QUALITY ASSURANCE AND SPECIAL INSPECTIONS.

REFERENCE DRAWINGS

1	93M-BOA-NAT-LOT-04833
2	93M-BOA-NAT-LOT-09170
3	93M-BOA-NAT-LOT-01976
4	93M-BOA-NAT-LOT-20021
5	
6	
7	
8	
9	

6TH OF OCTOBER CITY RAIL TRANSIT MONORAIL

The Authority | Consultant: Hill International | Main Contractor: ORASCOM CONSTRUCTION, Six Construct, BOMBARDIER | Structural Designer: INNOVA TRANSPORTATION

KEY PLAN:

REV	DATE	DSN	CHK	APP	AMENDMENTS/STATUS
B	12/05/2023	M.KH	M.KH	DR.M.M	ISSUED FOR INFORMATION IFI

SCALE: AS SHOWN | SHOP DRAWING | DATE: 12/05/2023

DRAWING TITLE
6TH OF OCTOBER MONORAIL
SERVICE WALKWAYS
ZONE (1008)
Z8-CHQ040

Project Code	Rubric	Initiator	Lot	Ref	Number	Revision
9 3	M 0 4 7 6	A C C	6 0 D E P	D W G	0 8 6 2 5	B

Tekla structures

approval is subject to approval of coordination package between multi-discipline

REVIEWED WITH COMMENT
MONORAILS PROJECT

All holes are 22mm U.N.O Length & Area & Weight per piece						
Z8-CHQ039	CHQD5*1103.4	S235JR	1	2814.5	6.02	117.1
Mark	Profile	Grade	QTY	Length	Area	Weight

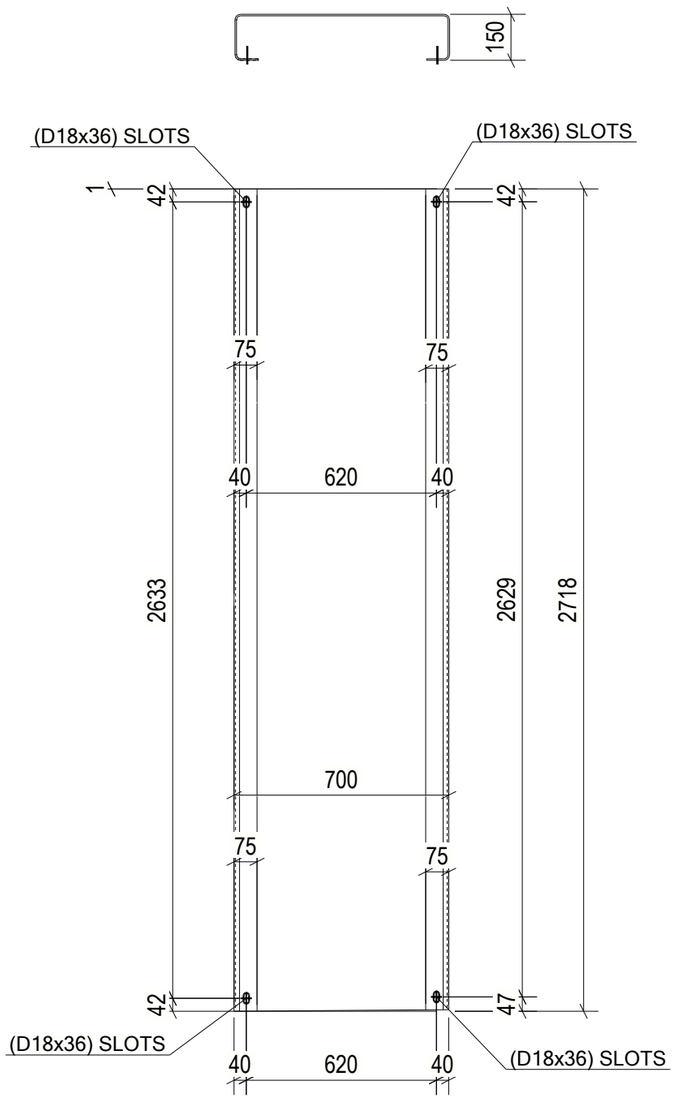

1 REQ'D AS DRAWN MK'D Z8-CHQ039

GENERAL NOTES:

1. THE DIMENSIONS SHOWN ARE NOMINAL (IN MILLIMETERS), U.N.O.
2. WELD SIZESHALL BE AISC MINIMUM OF 6 mm UNLESS NOTED OTHERWISE.
3. ALL FIELD WELDS SHALL BE INSPECTED PER QUALITY ASSURANCE AND SPECIAL INSPECTIONS.

REFERENCE DRAWINGS

1	93M-BOA-NAT-LOT-04833
2	93M-BOA-NAT-LOT-09170
3	93M-BOA-NAT-LOT-01976
4	93M-BOA-NAT-LOT-20021
5	
6	
7	
8	
9	

6TH OF OCTOBER CITY RAIL TRANSIT MONORAIL

The Authority | Consultant: Hill International | Main Contractor: ORASCOM CONSTRUCTION / BOMBARDIER | Structural Designer: INNOVA TRANSPORTATION

KEY PLAN:

6 October Monorail Engineering Unit Valid For Construction

SCALE	SHOP DRAWING	DATE
AS SHOWN		12/05/2023

REV	DATE	DSN	CHK	APP	AMENDMENTS DESCRIPTION	STATUS
B	12/05/2023	M.KH	M.KH	DR.M.M	ISSUED FOR INFORMATION	IFI
A	12/05/2023	M.KH	M.KH	DR.M.M	ISSUED FOR INFORMATION	IFI

DRAWING TITLE

6TH OF OCTOBER MONORAIL
SERVICE WALKWAYS
ZONE (1008)
Z8-CHQ039

Project Code	Rubric	Initiator	Lot	Ref	Number	Revision
9 3	M 0 4 7 6	A C C	6 0 D E	P	D W G	0 8 2 6	B

Tekla structures

approval is subject to approval of coordination package between multi-discipline

REVIEWED WITH COMMENT
MONORAILS PROJECT

All holes are 22mm U.N.O Length & Area & Weight per piece						
Z8-CHQ038	CHQD5*1103.4	S235JR	1	3093.8	6.64	129.1
Mark	Profile	Grade	QTY	Length	Area	Weight

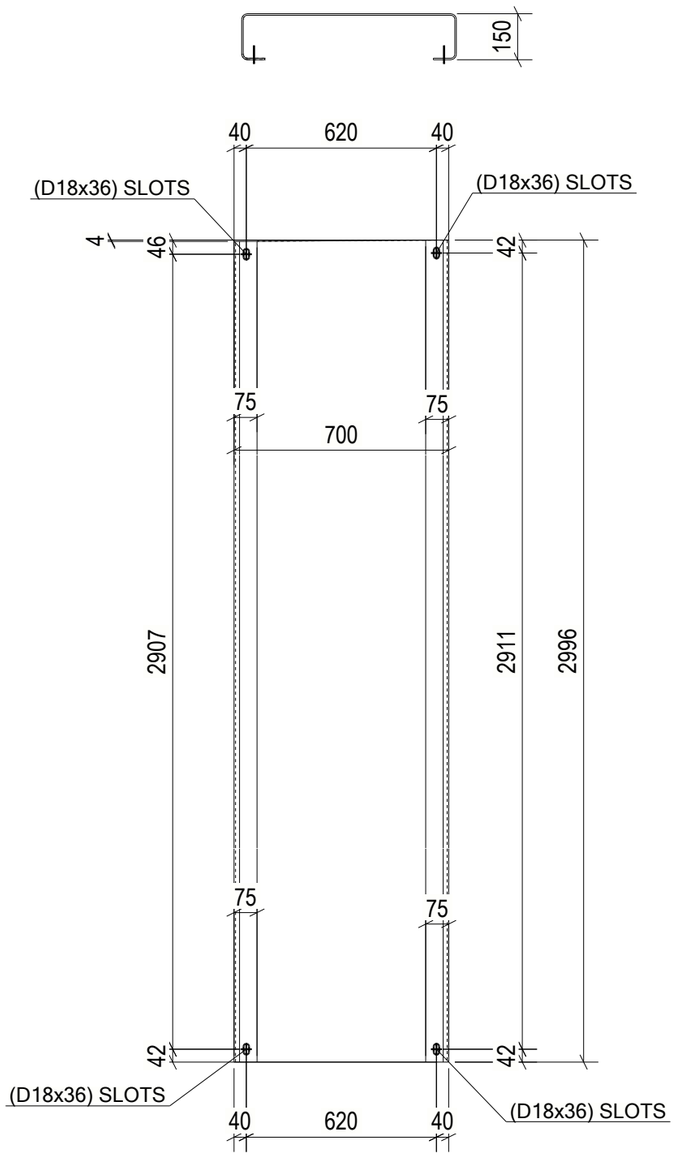

1 REQ'D AS DRAWN MK'D Z8-CHQ038

GENERAL NOTES:

1. THE DIMENSIONS SHOWN ARE NOMINAL (IN MILLIMETERS), U.N.O.
2. WELD SIZESHALL BE AISC MINIMUM OF 6 mm UNLESS NOTED OTHERWISE.
3. ALL FIELD WELDS SHALL BE INSPECTED PER QUALITY ASSURANCE AND SPECIAL INSPECTIONS.

REFERENCE DRAWINGS

1	93M-BOA-NAT-LOT-04833
2	93M-BOA-NAT-LOT-09170
3	93M-BOA-NAT-LOT-01976
4	93M-BOA-NAT-LOT-20021
5	
6	
7	
8	
9	

6TH OF OCTOBER CITY RAIL TRANSIT MONORAIL

The Authority | Consultant: Hill International | Main Contractor: ORASCOM CONSTRUCTION / BOMBARDIER | Structural Designer: INNOVA TRANSPORTATION

KEY PLAN:

6 October Monorail Engineering Unit
Valid For Construction

SCALE	SHOP DRAWING	DATE
AS SHOWN		12/05/2023

REV.	DATE	DSN	CHK	APP.	AMENDMENTS	STATUS
B	12/05/2023	M.KH	M.KH	DR.M.M	ISSUED FOR INFORMATION	IFI

DRAWING TITLE
6TH OF OCTOBER MONORAIL
SERVICE WALKWAYS
ZONE (1008)
Z8-CHQ038

Project Code	Rubric	Initiator	Lot	Ref	Number	Revision
9 3	M 0 4 7 6	A C C	6 0 D E P	D W G	0 8 6 2 7	B

Tekla structures

approval is subject to approval of coordination package between multi-discipline

REVIEWED WITH COMMENT
MONORAILS PROJECT

All holes are 22mm U.N.O Length & Area & Weight per piece						
Z8-CHQ037	CHQD5*1103.4	S235JR	1	2086.8	4.41	85.7
Mark	Profile	Grade	QTY	Length	Area	Weight

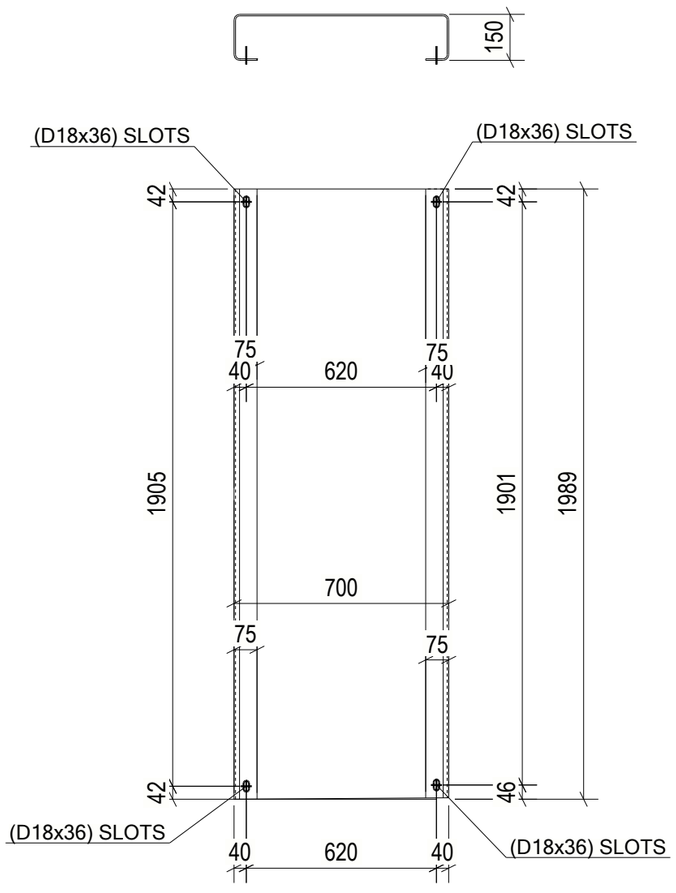

1 REQ'D AS DRAWN MK'D Z8-CHQ037

6 October Monorail
Engineering Unit
Valid For Construction

GENERAL NOTES:

1. THE DIMENSIONS SHOWN ARE NOMINAL (IN MILLIMETERS), U.N.O.
2. WELD SIZESHALL BE AISC MINIMUM OF 6 mm UNLESS NOTED OTHERWISE.
3. ALL FIELD WELDS SHALL BE INSPECTED PER QUALITY ASSURANCE AND SPECIAL INSPECTIONS.

REFERENCE DRAWINGS

1	93M-BOA-NAT-LOT-04833
2	93M-BOA-NAT-LOT-09170
3	93M-BOA-NAT-LOT-01976
4	93M-BOA-NAT-LOT-20021
5	
6	
7	
8	
9	

6TH OF OCTOBER CITY RAIL TRANSIT MONORAIL

The Authority | Hill International Consultant | ORASCOM BOMBARDIER Main Contractor | INNOVA Structural Designer

KEY PLAN:

SCALE	SHOP DRAWING	DATE
AS SHOWN		12/05/2023

REV	DATE	DES.	CHK.	APP.	AMENDMENTS DESCRIPTION	STATUS
B	12/05/2023	M.KH	M.KH	DR.M.M	ISSUED FOR INFORMATION	IFI
A	17/04/2023	D.SS	C.HK	APP.	AMENDMENTS DESCRIPTION	STATUS

DRAWING TITLE

6TH OF OCTOBER MONORAIL
SERVICE WALKWAYS
ZONE (1008)
Z8-CHQ037

Project Code	Rubric	Initiator	Lot	Ref	Number	Revision
9 3	M 0 4 7 6	A C C	6 0 D E	P D W G	0 8 6 2 8	B

Tekla structures

approval is subject to approval of coordination package between multi-discipline

REVIEWED WITH COMMENT
MONORAILS PROJECT

All holes are 22mm U.N.O Length & Area & Weight per piece						
Z8-CHQ036	CHQD5*1103.4	S235JR	1	2087.6	4.41	85.7
Mark	Profile	Grade	QTY	Length	Area	Weight

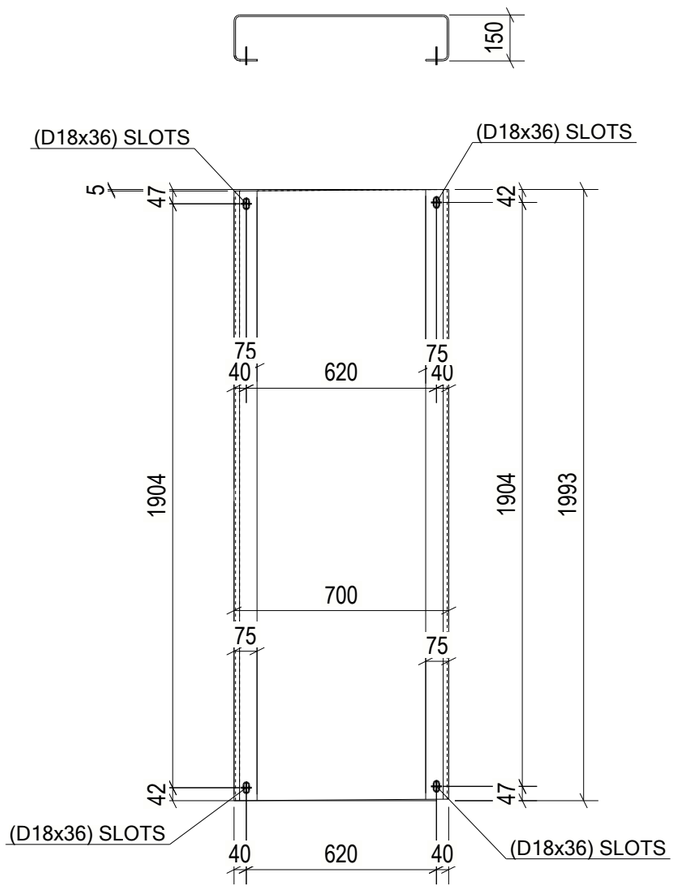

1 REQ'D AS DRAWN MK'D Z8-CHQ036

6 October Monorail
Engineering Unit
Valid For Construction

GENERAL NOTES:

1. THE DIMENSIONS SHOWN ARE NOMINAL (IN MILLIMETERS), U.N.O.
2. WELD SIZESHALL BE AISC MINIMUM OF 6 mm UNLESS NOTED OTHERWISE.
3. ALL FIELD WELDS SHALL BE INSPECTED PER QUALITY ASSURANCE AND SPECIAL INSPECTIONS.

REFERENCE DRAWINGS

1	93M-BOA-NAT-LOT-04833
2	93M-BOA-NAT-LOT-09170
3	93M-BOA-NAT-LOT-01976
4	93M-BOA-NAT-LOT-20021
5	
6	
7	
8	
9	

6TH OF OCTOBER CITY RAIL TRANSIT MONORAIL

The Authority | Hill International Consultant | Main Contractor | Structural Designer

KEY PLAN:

SCALE	SHOP DRAWING	DATE
AS SHOWN		12/05/2023

REV	DATE	DES.	CHK.	APP.	AMENDMENTS	STATUS
B	12/05/2023	M.KH	M.KH	DR.M.M	ISSUED FOR INFORMATION	IFI
A	17/04/2023	D.SS	CHK.	APP.	AMENDMENTS	STATUS

DRAWING TITLE
6TH OF OCTOBER MONORAIL
SERVICE WALKWAYS
ZONE (1008)
Z8-CHQ036

Project Code	Rubric	Initiator	Lot	Ref	Number	Revision
9 3	M 0 4 7 6	A C C	6 0 D E	P D W G	0 8 6 2 9	B

Tekla structures

approval is subject to approval of coordination package between multi-discipline

REVIEWED WITH COMMENT
MONORAILS PROJECT

All holes are 22mm U.N.O Length & Area & Weight per piece						
Z8-CHQ035	CHQD5*1103.4	S235JR	1	2092.9	4.42	86.0
Mark	Profile	Grade	QTY	Length	Area	Weight

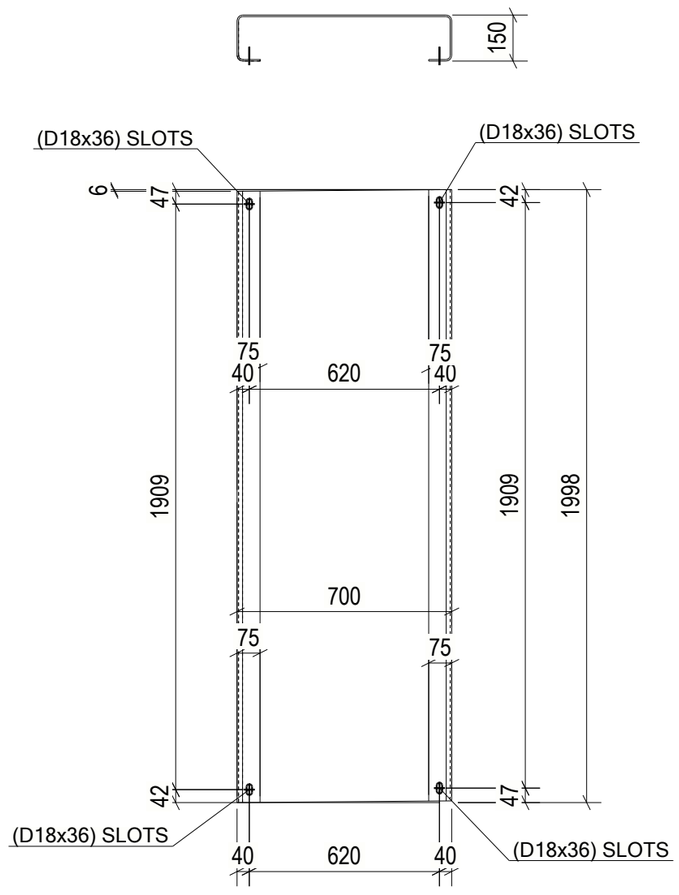

1 REQ'D AS DRAWN MK'D Z8-CHQ035

6 October Monorail
Engineering Unit
Valid For Construction

GENERAL NOTES:

1. THE DIMENSIONS SHOWN ARE NOMINAL (IN MILLIMETERS), U.N.O.
2. WELD SIZESHALL BE AISC MINIMUM OF 6 mm UNLESS NOTED OTHERWISE.
3. ALL FIELD WELDS SHALL BE INSPECTED PER QUALITY ASSURANCE AND SPECIAL INSPECTIONS.

REFERENCE DRAWINGS

1	93M-BOA-NAT-LOT-04833
2	93M-BOA-NAT-LOT-09170
3	93M-BOA-NAT-LOT-01976
4	93M-BOA-NAT-LOT-20021
5	
6	
7	
8	
9	

6TH OF OCTOBER CITY RAIL TRANSIT MONORAIL

The Authority | Hill International Consultant | Main Contractor | Structural Designer

KEY PLAN:

SCALE	SHOP DRAWING	DATE
AS SHOWN		12/05/2023

REV	DATE	DES.	CHK.	APP.	AMENDMENTS	STATUS
B	12/05/2023	M.KH	M.KH	DR.M.M	ISSUED FOR INFORMATION	IFI

DRAWING TITLE
6TH OF OCTOBER MONORAIL
SERVICE WALKWAYS
ZONE (1008)
Z8-CHQ035

Project Code	Rubric	Initiator	Lot	Ref	Number	Revision
9 3	M 0 4 7 6	A C C	6 0 D E	P	D W G	0 8 6 3 0	B

Tekla structures

approval is subject to approval of coordination package between multi-discipline

REVIEWED WITH COMMENT MONORAILS PROJECT

All holes are 22mm U.N.O Length & Area & Weight per piece						
Z8-CHQ034	CHQD5*1103.4	S235JR	1	3089.1	6.63	128.9
Mark	Profile	Grade	QTY	Length	Area	Weight

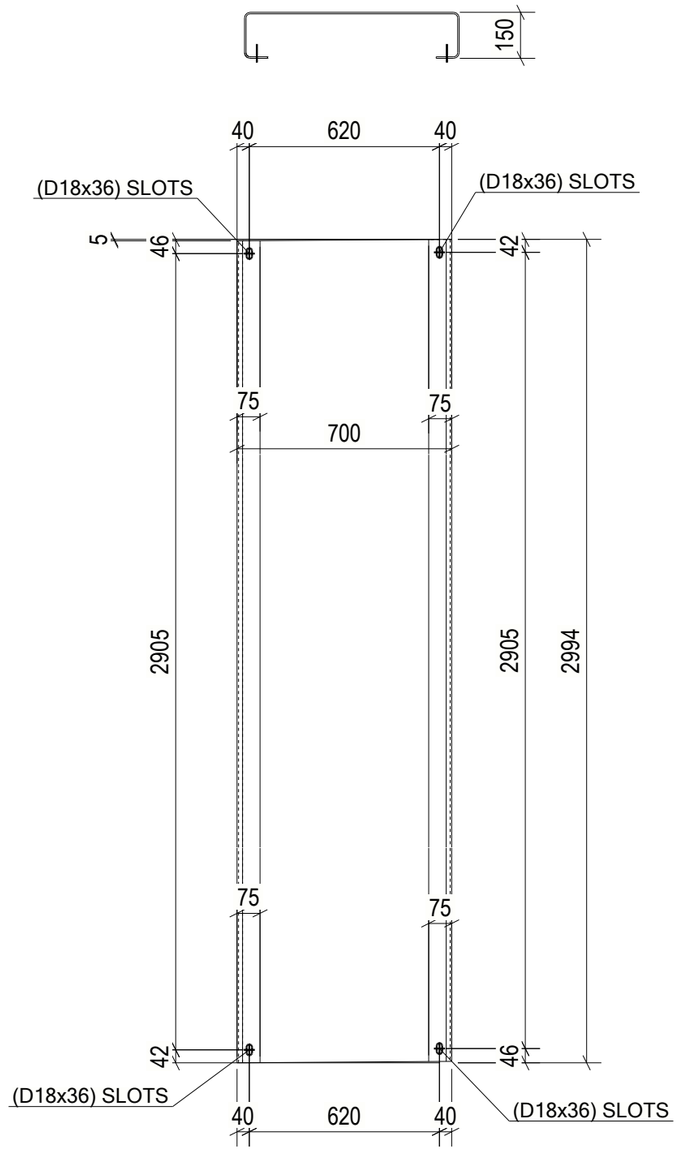

1 REQ'D AS DRAWN MK'D Z8-CHQ034

6 October Monorail Engineering Unit Valid For Construction

GENERAL NOTES:

1. THE DIMENSIONS SHOWN ARE NOMINAL (IN MILLIMETERS), U.N.O.
2. WELD SIZESHALL BE AISC MINIMUM OF 6 mm UNLESS NOTED OTHERWISE.
3. ALL FIELD WELDS SHALL BE INSPECTED PER QUALITY ASSURANCE AND SPECIAL INSPECTIONS.

REFERENCE DRAWINGS

1	93M-BOA-NAT-LOT-04833
2	93M-BOA-NAT-LOT-09170
3	93M-BOA-NAT-LOT-01976
4	93M-BOA-NAT-LOT-20021
5	
6	
7	
8	
9	

6TH OF OCTOBER CITY RAIL TRANSIT MONORAIL

The Authority | Hill International Consultant | ORASCOM BOMBARDIER Main Contractor | INNOVA Structural Designer

KEY PLAN:

SCALE	SHOP DRAWING	DATE
AS SHOWN		12/05/2023

REV	DATE	DSN	CHK	APP	AMENDMENTS	STATUS
B	12/05/2023	M.KH	M.KH	DR.M.M	ISSUED FOR INFORMATION	IFI

DRAWING TITLE

6TH OF OCTOBER MONORAIL SERVICE WALKWAYS ZONE (1008) Z8-CHQ034

Project Code	Rubric	Initiator	Lot	Ref	Number	Revision
93M	0476	ACC	60DEP	DWG	08631	B

Tekla structures

approval is subject to approval of coordination package between multi-discipline

REVIEWED WITH COMMENT
MONORAILS PROJECT

All holes are 22mm U.N.O Length & Area & Weight per piece						
Z8-CHQ033	CHQD5*1103.4	S235JR	2	3087.9	6.63	128.9
Mark	Profile	Grade	QTY	Length	Area	Weight

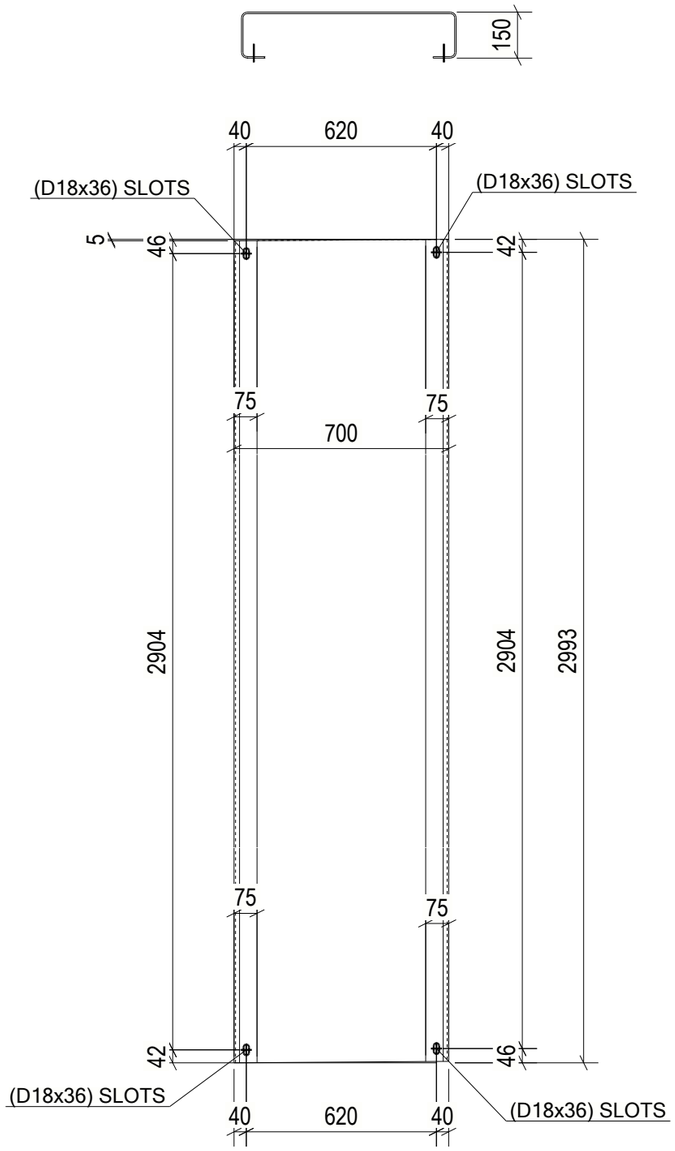

2 REQ'D AS DRAWN MK'D Z8-CHQ033

6 October Monorail Engineering Unit Valid For Construction

GENERAL NOTES:

1. THE DIMENSIONS SHOWN ARE NOMINAL (IN MILLIMETERS), U.N.O.
2. WELD SIZESHALL BE AISC MINIMUM OF 6 mm UNLESS NOTED OTHERWISE.
3. ALL FIELD WELDS SHALL BE INSPECTED PER QUALITY ASSURANCE AND SPECIAL INSPECTIONS.

REFERENCE DRAWINGS

1	93M-BOA-NAT-LOT-04833
2	93M-BOA-NAT-LOT-09170
3	93M-BOA-NAT-LOT-01976
4	93M-BOA-NAT-LOT-20021
5	
6	
7	
8	
9	

6TH OF OCTOBER CITY RAIL TRANSIT MONORAIL

The Authority | Consultant: Hill International | Main Contractor: ORASCOM CONSTRUCTION, BOMBARDIER | Structural Designer: INNOVA TRANSPORTATION

KEY PLAN:

REV	DATE	DSN	CHK	APP	AMENDMENTS	STATUS
B	12/05/2023	M.KH	M.KH	DR.M.M	ISSUED FOR INFORMATION	IFI

SCALE: AS SHOWN | SHOP DRAWING | DATE: 12/05/2023

DRAWING TITLE
6TH OF OCTOBER MONORAIL
SERVICE WALKWAYS
ZONE (1008)
Z8-CHQ033

Project Code	Rubric	Initiator	Lot	Ref	Number	Revision
9 3 M	0 4 7 6	A C C	6 0 D E P	D W G	0 8 6 3 2	B

Tekla structures

approval is subject to approval of coordination package between multi-discipline

REVIEWED WITH COMMENT
MONORAILS PROJECT

All holes are 22mm U.N.O Length & Area & Weight per piece						
Z8-CHQ032	CHQD5*1103.4	S235JR	3	3092.3	6.64	129.1
Mark	Profile	Grade	QTY	Length	Area	Weight

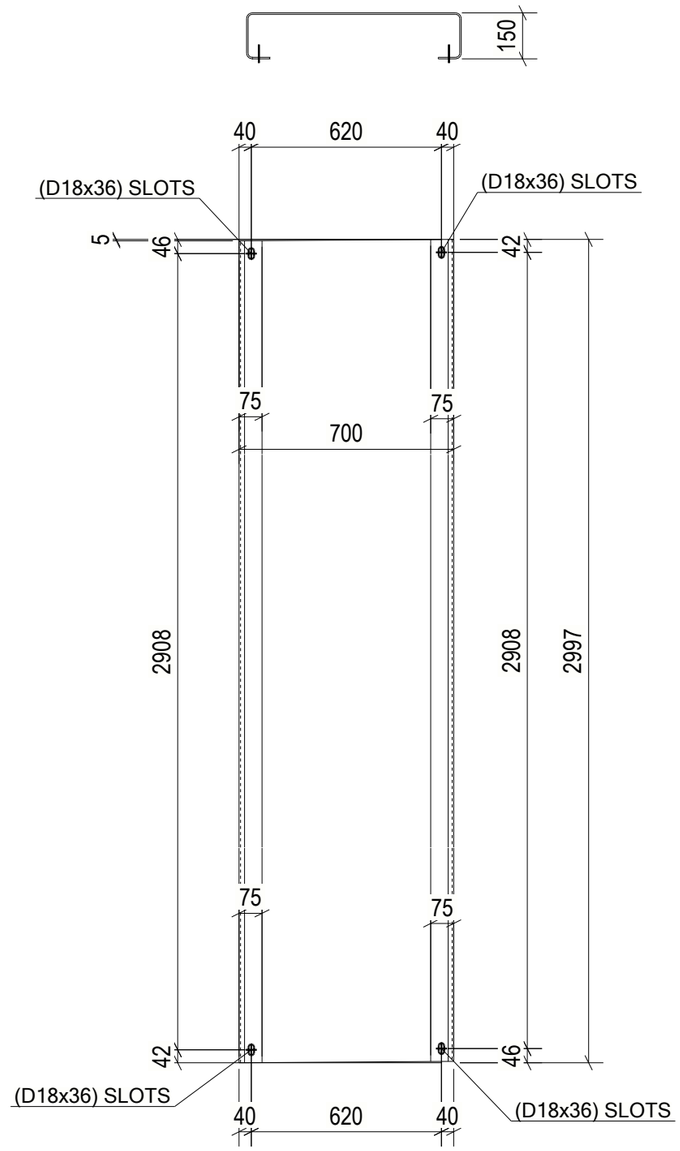

3 REQ'D AS DRAWN MK'D Z8-CHQ032

6 October Monorail
Engineering Unit
Valid For Construction

GENERAL NOTES:

1. THE DIMENSIONS SHOWN ARE NOMINAL (IN MILLIMETERS), U.N.O.
2. WELD SIZESHALL BE AISC MINIMUM OF 6 mm UNLESS NOTED OTHERWISE.
3. ALL FIELD WELDS SHALL BE INSPECTED PER QUALITY ASSURANCE AND SPECIAL INSPECTIONS.

REFERENCE DRAWINGS

1	93M-BOA-NAT-LOT-04833
2	93M-BOA-NAT-LOT-09170
3	93M-BOA-NAT-LOT-01976
4	93M-BOA-NAT-LOT-20021
5	
6	
7	
8	
9	

6TH OF OCTOBER CITY RAIL TRANSIT MONORAIL

The Authority | Consultant: Hill International | Main Contractor: ORASCOM CONSTRUCTION, Six Construct, BOMBARDIER | Structural Designer: INNOVA TRANSPORTATION

KEY PLAN:

SCALE	SHOP DRAWING	DATE
AS SHOWN		12/05/2023

REV	DATE	DSN	CHK	APP	AMENDMENTS	STATUS
B	12/05/2023	M.KH	M.KH	DR.M.M	ISSUED FOR INFORMATION	IFI

DRAWING TITLE
6TH OF OCTOBER MONORAIL
SERVICE WALKWAYS
ZONE (1008)
Z8-CHQ032

Project Code	Rubric	Initiator	Lot	Ref	Number	Revision
9 3 M	0 4 7 6	A C C	6 0 D E P	D W G	0 8 6 3 3	B

Tekla structures

approval is subject to approval of coordination package between multi-discipline

REVIEWED WITH COMMENT
MONORAILS PROJECT

All holes are 22mm U.N.O Length & Area & Weight per piece

Mark	Profile	Grade	QTY	Length	Area	Weight
Z8-CHQ031	CHQD5*1103.4	S235JR	2	3087.1	6.63	128.9

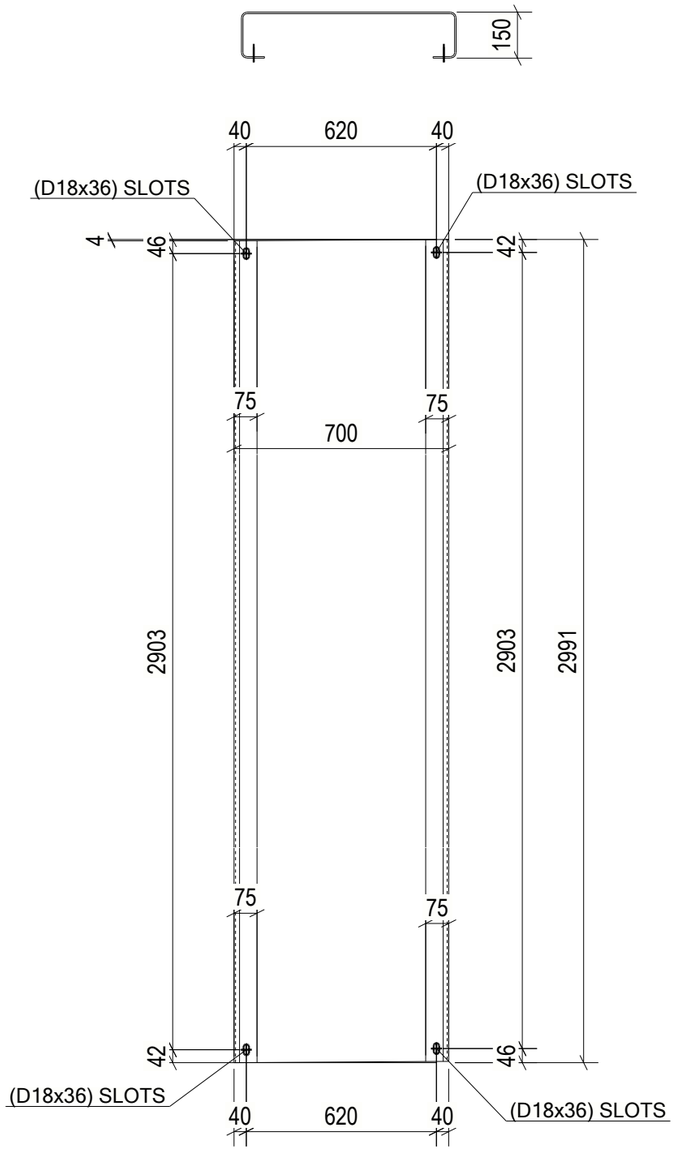

2 REQ'D AS DRAWN MK'D Z8-CHQ031

6 October Monorail
Engineering Unit
Valid For Construction

GENERAL NOTES:

1. THE DIMENSIONS SHOWN ARE NOMINAL (IN MILLIMETERS), U.N.O.
2. WELD SIZESHALL BE AISC MINIMUM OF 6 mm UNLESS NOTED OTHERWISE.
3. ALL FIELD WELDS SHALL BE INSPECTED PER QUALITY ASSURANCE AND SPECIAL INSPECTIONS.

REFERENCE DRAWINGS

1	93M-BOA-NAT-LOT-04833
2	93M-BOA-NAT-LOT-09170
3	93M-BOA-NAT-LOT-01976
4	93M-BOA-NAT-LOT-20021
5	
6	
7	
8	
9	

6TH OF OCTOBER CITY RAIL TRANSIT MONORAIL

The Authority | Consultant: Hill International | Main Contractor: ORASCOM CONSTRUCTION / BOMBARDIER | Structural Designer: INNOVA TRANSPORTATION

KEY PLAN:

SCALE	SHOP DRAWING	DATE
AS SHOWN		12/05/2023

REV	DATE	DSN	CHK	APP	AMENDMENTS	STATUS
B	12/05/2023	M.KH	M.KH	DR.M.M	ISSUED FOR INFORMATION	IFI

DRAWING TITLE
6TH OF OCTOBER MONORAIL
SERVICE WALKWAYS
ZONE (1008)
Z8-CHQ031

Project Code	Rubric	Initiator	Lot	Ref	Number	Revision
9 3	M 0 4 7 6	A C C	6 0 D E P	D W G	0 8 6 3 4	B

Tekla structures

approval is subject to approval of coordination package between multi-discipline

REVIEWED WITH COMMENT
MONORAILS PROJECT

All holes are 22mm U.N.O Length & Area & Weight per piece						
Z8-CHQ030	CHQD5*1103.4	S235JR	1	3089.8	6.63	129.0
Mark	Profile	Grade	QTY	Length	Area	Weight

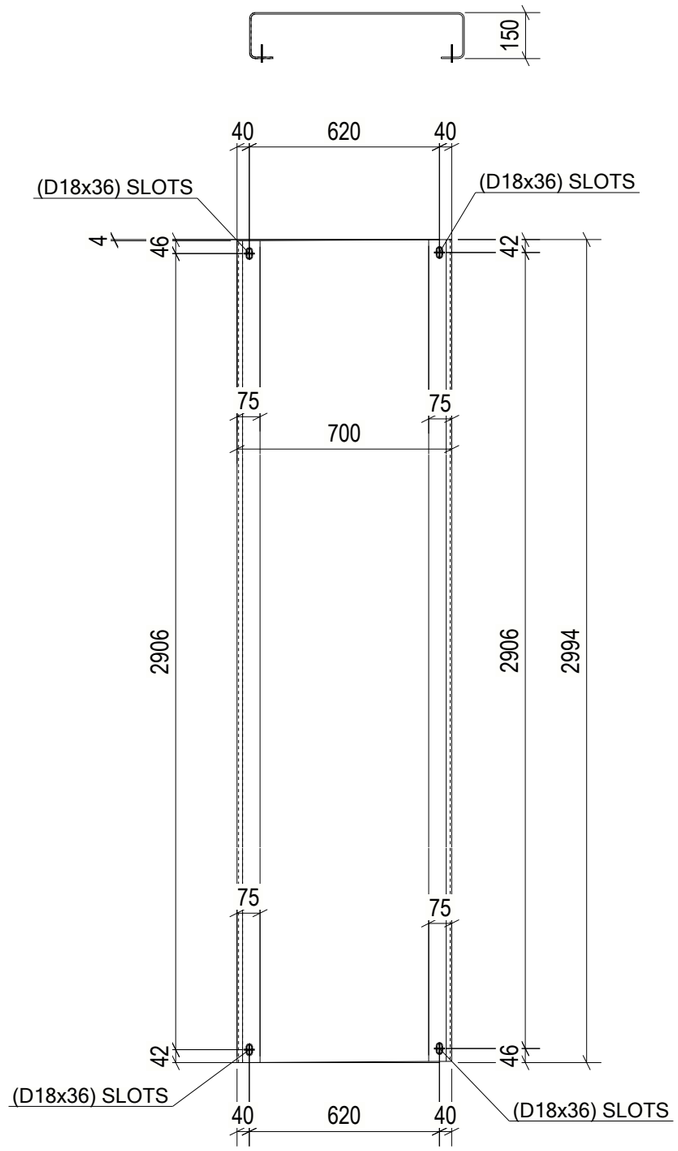

1 REQ'D AS DRAWN MK'D Z8-CHQ030

6 October Monorail Engineering Unit Valid For Construction

GENERAL NOTES:

1. THE DIMENSIONS SHOWN ARE NOMINAL (IN MILLIMETERS), U.N.O.
2. WELD SIZESHALL BE AISC MINIMUM OF 6 mm UNLESS NOTED OTHERWISE.
3. ALL FIELD WELDS SHALL BE INSPECTED PER QUALITY ASSURANCE AND SPECIAL INSPECTIONS.

REFERENCE DRAWINGS

1	93M-BOA-NAT-LOT-04833
2	93M-BOA-NAT-LOT-09170
3	93M-BOA-NAT-LOT-01976
4	93M-BOA-NAT-LOT-20021
5	
6	
7	
8	
9	

6TH OF OCTOBER CITY RAIL TRANSIT MONORAIL

The Authority | Consultant: Hill International | Main Contractor: ORASCOM CONSTRUCTION, BOMBARDIER | Structural Designer: INNOVA TRANSPORTATION

KEY PLAN:

SCALE	SHOP DRAWING	DATE
AS SHOWN		12/05/2023

REV	DATE	DSN	CHK	APP	AMENDMENTS DESCRIPTION	STATUS
B	12/05/2023	M.KH	M.KH	DR.M.M	ISSUED FOR INFORMATION	IFI
A	11/04/2023	M.KH	M.KH	DR.M.M	ISSUED FOR INFORMATION	IFI

DRAWING TITLE
6TH OF OCTOBER MONORAIL
SERVICE WALKWAYS
ZONE (1008)
Z8-CHQ030

Project Code	Rubric	Initiator	Lot	Ref	Number	Revision
9 3 M	0 4 7 6	A C C	6 0 D E P	D W G	0 8 6 3 5	B

Tekla structures

approval is subject to approval of coordination package between multi-discipline

REVIEWED WITH COMMENT
MONORAILS PROJECT

All holes are 22mm U.N.O Length & Area & Weight per piece

Mark	Profile	Grade	QTY	Length	Area	Weight
Z8-CHQ029	CHQD5*1103.4	S235JR	1	3086.7	6.63	128.9

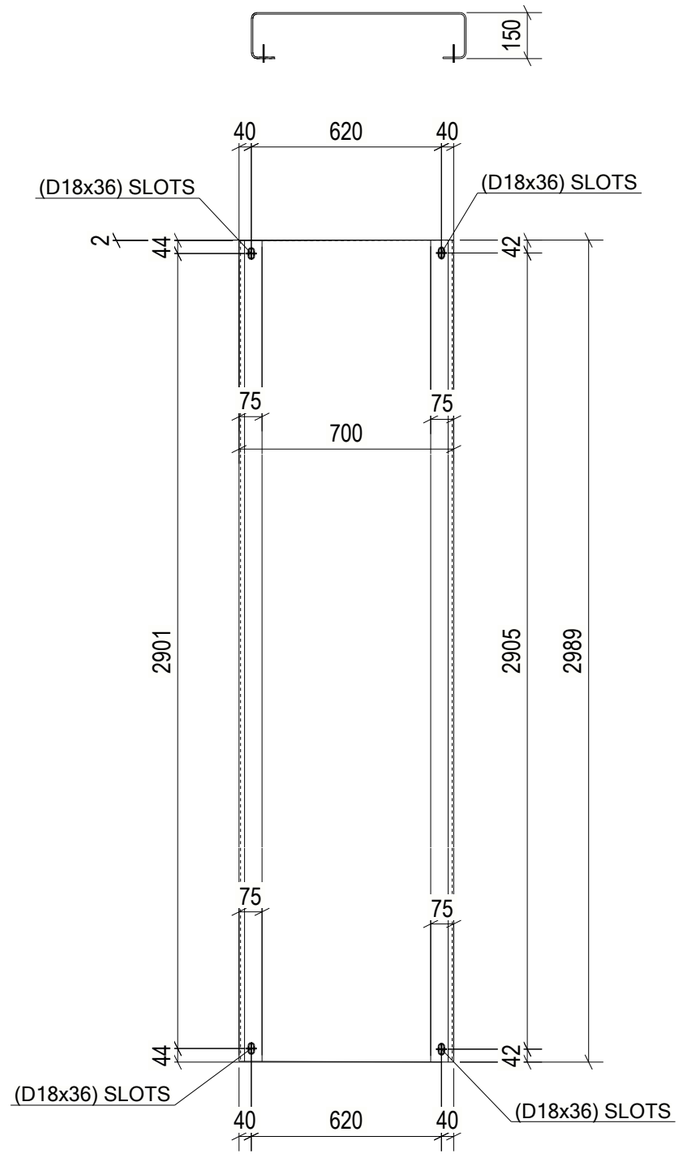

1 REQ'D AS DRAWN MK'D Z8-CHQ029

6 October Monorail Engineering Unit Valid For Construction

GENERAL NOTES:

1. THE DIMENSIONS SHOWN ARE NOMINAL (IN MILLIMETERS), U.N.O.
2. WELD SIZESHALL BE AISC MINIMUM OF 6 mm UNLESS NOTED OTHERWISE.
3. ALL FIELD WELDS SHALL BE INSPECTED PER QUALITY ASSURANCE AND SPECIAL INSPECTIONS.

REFERENCE DRAWINGS

1	93M-BOA-NAT-LOT-04833
2	93M-BOA-NAT-LOT-09170
3	93M-BOA-NAT-LOT-01976
4	93M-BOA-NAT-LOT-20021
5	
6	
7	
8	
9	

6TH OF OCTOBER CITY RAIL TRANSIT MONORAIL

The Authority | Consultant: Hill International | Main Contractor: ORASCOM CONSTRUCTION, Six Construct, BOMBARDIER | Structural Designer: INNOVA TRANSPORTATION

KEY PLAN:

SCALE	SHOP DRAWING	DATE
AS SHOWN		12/05/2023

REV	DATE	DSN	CHK	APP	AMENDMENTS	STATUS
B	12/05/2023	M.KH	M.KH	DR.M.M	ISSUED FOR INFORMATION	IFI

DRAWING TITLE

6TH OF OCTOBER MONORAIL
SERVICE WALKWAYS
ZONE (1008)
Z8-CHQ029

Project Code	Rubric	Initiator	Lot	Ref	Number	Revision
9 3 M	0 4 7 6	A C C	6 0 D E P	D W G	0 8 6 3 6	B

Tekla structures

approval is subject to approval of coordination package between multi-discipline

REVIEWED WITH COMMENT MONORAILS PROJECT

All holes are 22mm U.N.O Length & Area & Weight per piece						
Z8-CHQ028	CHQD5*1103.4	S235JR	1	2195.7	4.65	90.4
Mark	Profile	Grade	QTY	Length	Area	Weight

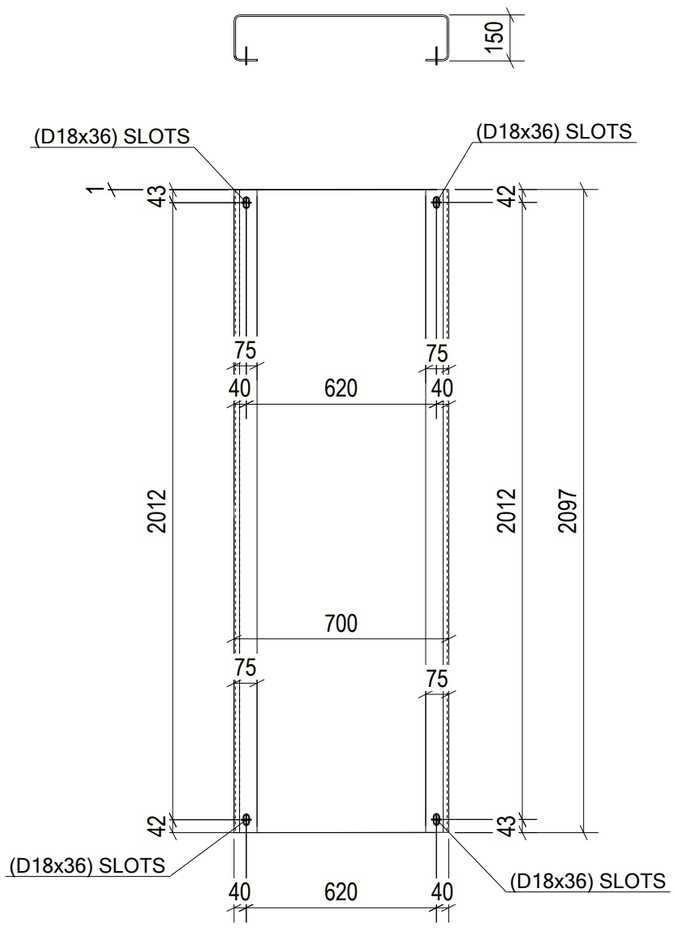

1 REQ'D AS DRAWN MK'D Z8-CHQ028

6 October Monorail Engineering Unit Valid For Construction

GENERAL NOTES:

1. THE DIMENSIONS SHOWN ARE NOMINAL (IN MILLIMETERS), U.N.O.
2. WELD SIZESHALL BE AISC MINIMUM OF 6 mm UNLESS NOTED OTHERWISE.
3. ALL FIELD WELDS SHALL BE INSPECTED PER QUALITY ASSURANCE AND SPECIAL INSPECTIONS.

REFERENCE DRAWINGS

1	93M-BOA-NAT-LOT-04833
2	93M-BOA-NAT-LOT-09170
3	93M-BOA-NAT-LOT-01976
4	93M-BOA-NAT-LOT-20021
5	
6	
7	
8	
9	

6TH OF OCTOBER CITY RAIL TRANSIT MONORAIL

The Authority | Hill International Consultant | ORASCOM BOMBARDIER Main Contractor | INNOVA Structural Designer

KEY PLAN:

SCALE	SHOP DRAWING	DATE
AS SHOWN		12/05/2023

REV	DATE	DSG	CHK	APP	AMENDMENTS	STATUS
B	12/05/2023	M.KH	M.KH	DR.M.M	ISSUED FOR INFORMATION	IFI

DRAWING TITLE

6TH OF OCTOBER MONORAIL SERVICE WALKWAYS ZONE (1008)
Z8-CHQ028

Project Code	Rubric	Initiator	Lot	Ref	Number	Revision
93M	0476	ACC	60DEP	DWG	08637	B

Tekla structures

approval is subject to approval of coordination package between multi-discipline

REVIEWED WITH COMMENT MONORAILS PROJECT

All holes are 22mm U.N.O Length & Area & Weight per piece						
Z8-CHQ027	CHQD5*1103.4	S235JR	1	2621.6	5.59	108.8
Mark	Profile	Grade	QTY	Length	Area	Weight

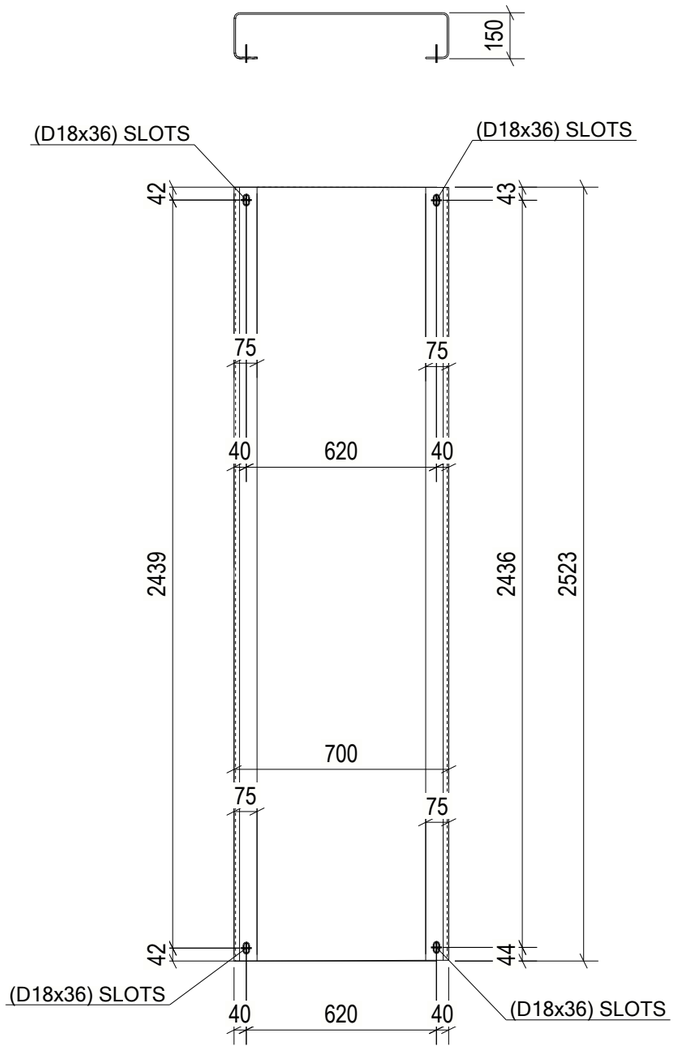

1 REQ'D AS DRAWN MK'D Z8-CHQ027

6 October Monorail Engineering Unit
Valid For Construction

GENERAL NOTES:

1. THE DIMENSIONS SHOWN ARE NOMINAL (IN MILLIMETERS), U.N.O.
2. WELD SIZESHALL BE AISC MINIMUM OF 6 mm UNLESS NOTED OTHERWISE.
3. ALL FIELD WELDS SHALL BE INSPECTED PER QUALITY ASSURANCE AND SPECIAL INSPECTIONS.

REFERENCE DRAWINGS

1	93M-BOA-NAT-LOT-04833
2	93M-BOA-NAT-LOT-09170
3	93M-BOA-NAT-LOT-01976
4	93M-BOA-NAT-LOT-20021
5	
6	
7	
8	
9	

6TH OF OCTOBER CITY RAIL TRANSIT MONORAIL

The Authority | Hill International Consultant | ORASCOM BOMBARDIER Main Contractor | INNOVA Structural Designer

KEY PLAN:

SCALE	SHOP DRAWING	DATE
AS SHOWN		12/05/2023

REV	DATE	DSG	CHK	APP	AMENDMENTS	STATUS
B	12/05/2023	M.KH	M.KH	DR.M.M	ISSUED FOR INFORMATION	IFI

DRAWING TITLE

6TH OF OCTOBER MONORAIL SERVICE WALKWAYS ZONE (1008)
Z8-CHQ027

Project Code	Rubric	Initiator	Lot	Ref	Number	Revision
93M	0476	ACC	60DEP	DWG	08638	B

Tekla structures

approval is subject to approval of coordination package between multi-discipline

REVIEWED WITH COMMENT MONORAILS PROJECT

All holes are 22mm U.N.O Length & Area & Weight per piece						
Z8-CHQ026	CHQD5*1103.4	S235JR	1	3091.5	6.64	129.0
Mark	Profile	Grade	QTY	Length	Area	Weight

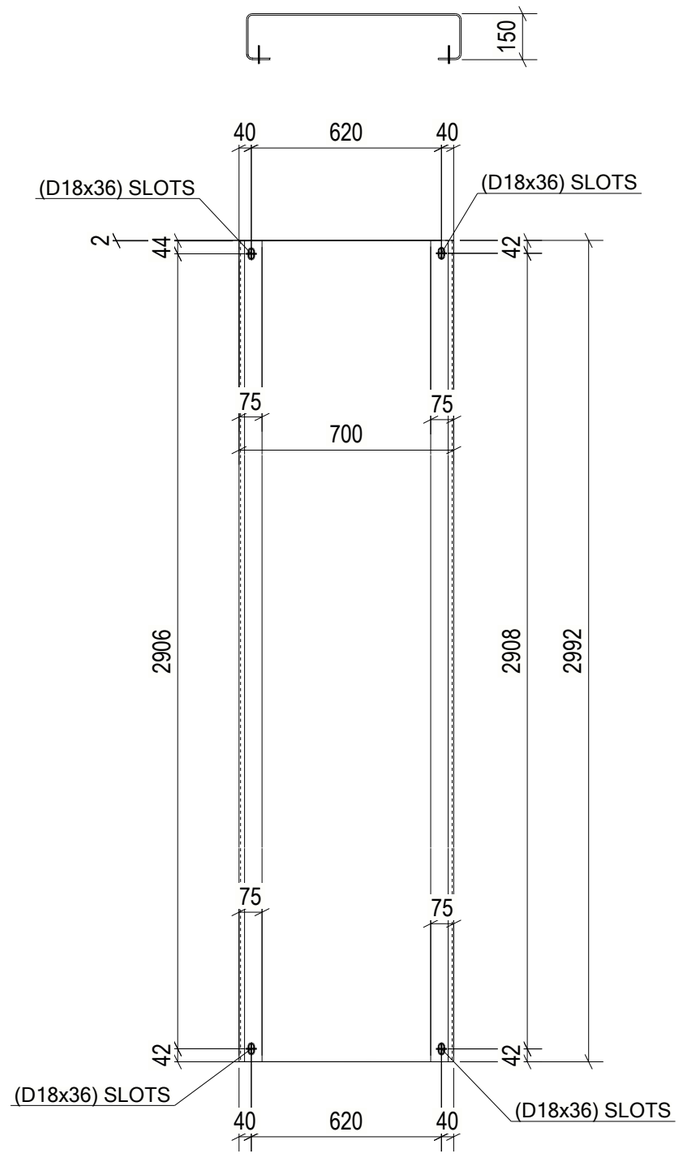

1 REQ'D AS DRAWN MK'D Z8-CHQ026

6 October Monorail Engineering Unit Valid For Construction

GENERAL NOTES:

1. THE DIMENSIONS SHOWN ARE NOMINAL (IN MILLIMETERS), U.N.O.
2. WELD SIZESHALL BE AISC MINIMUM OF 6 mm UNLESS NOTED OTHERWISE.
3. ALL FIELD WELDS SHALL BE INSPECTED PER QUALITY ASSURANCE AND SPECIAL INSPECTIONS.

REFERENCE DRAWINGS

1	93M-BOA-NAT-LOT-04833
2	93M-BOA-NAT-LOT-09170
3	93M-BOA-NAT-LOT-01976
4	93M-BOA-NAT-LOT-20021
5	
6	
7	
8	
9	

6TH OF OCTOBER CITY RAIL TRANSIT MONORAIL

The Authority | Hill International Consultant | ORASCOM BOMBARDIER Main Contractor | INNOVA Structural Designer

KEY PLAN:

SCALE	SHOP DRAWING	DATE
AS SHOWN		12/05/2023

REV	DATE	DSN	CHK	APP	AMENDMENTS	STATUS
B	12/05/2023	M.KH	M.KH	DR.M.M	ISSUED FOR INFORMATION	IFI

DRAWING TITLE

6TH OF OCTOBER MONORAIL SERVICE WALKWAYS ZONE (1008) Z8-CHQ026

Project Code	Rubric	Initiator	Lot	Ref	Number	Revision
93M	0476	ACC	60DEP	DWG	08639	B

Tekla structures

approval is subject to approval of coordination package between multi-discipline

REVIEWED WITH COMMENT
MONORAILS PROJECT

All holes are 22mm U.N.O Length & Area & Weight per piece						
Z8-CHQ025	CHQD5*1103.4	S235JR	1	3091.2	6.63	129.0
Mark	Profile	Grade	QTY	Length	Area	Weight

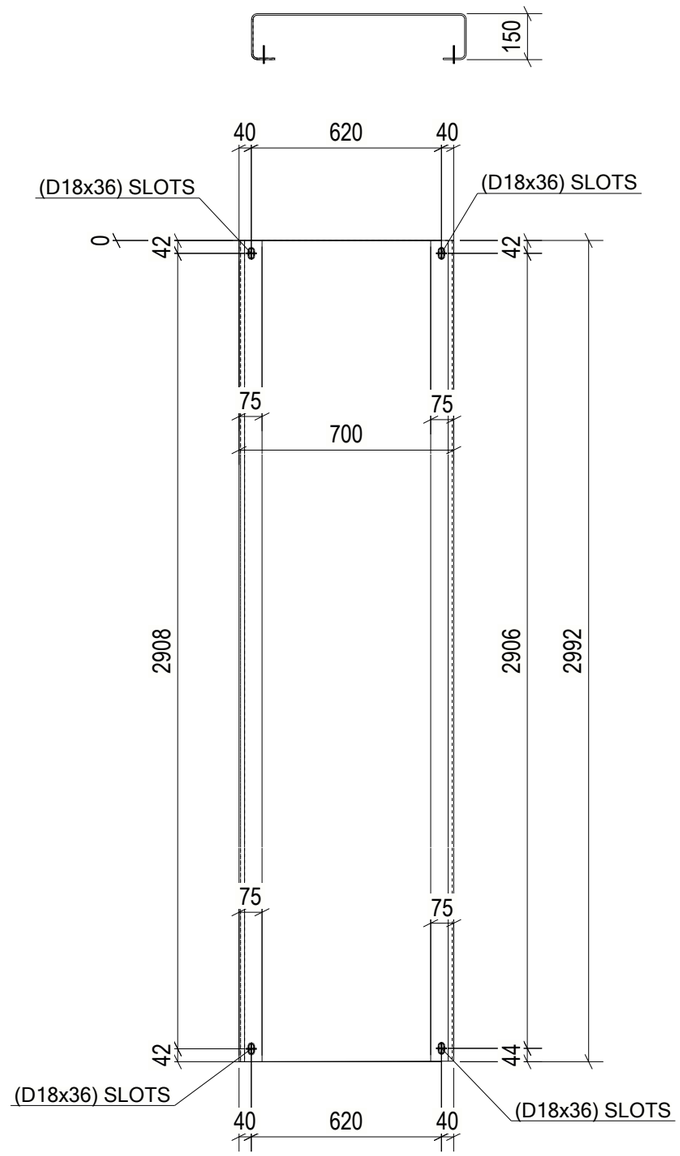

1 REQ'D AS DRAWN MK'D Z8-CHQ025

6 October Monorail
Engineering Unit
Valid For Construction

GENERAL NOTES:

1. THE DIMENSIONS SHOWN ARE NOMINAL (IN MILLIMETERS), U.N.O.
2. WELD SIZESHALL BE AISC MINIMUM OF 6 mm UNLESS NOTED OTHERWISE.
3. ALL FIELD WELDS SHALL BE INSPECTED PER QUALITY ASSURANCE AND SPECIAL INSPECTIONS.

REFERENCE DRAWINGS

1	93M-BOA-NAT-LOT-04833
2	93M-BOA-NAT-LOT-09170
3	93M-BOA-NAT-LOT-01976
4	93M-BOA-NAT-LOT-20021
5	
6	
7	
8	
9	

6TH OF OCTOBER CITY RAIL TRANSIT MONORAIL

The Authority | Consultant: Hill International | Main Contractor: ORASCOM CONSTRUCTION, Six Bridges Consortium, BOMBARDIER | Structural Designer: INNOVA TRANSPORTATION

KEY PLAN:

SCALE	SHOP DRAWING	DATE
AS SHOWN		12/05/2023

REV	DATE	DSN	CHK	APP	AMENDMENTS	STATUS
B	12/05/2023	M.KH	M.KH	DR.M.M	ISSUED FOR INFORMATION	IFI

DRAWING TITLE
6TH OF OCTOBER MONORAIL
SERVICE WALKWAYS
ZONE (1008)
Z8-CHQ025

Project Code	Rubric	Initiator	Lot	Ref	Number	Revision
9 3 M	0 4 7 6	A C C	6 0 D E P	D W G	0 8 6 4 0	B

Tekla structures

approval is subject to approval of coordination package between multi-discipline

REVIEWED WITH COMMENT MONORAILS PROJECT

All holes are 22mm U.N.O Length & Area & Weight per piece						
Z8-CHQ024	CHQD5*1103.4	S235JR	2	1587.7	3.31	64.2
Mark	Profile	Grade	QTY	Length	Area	Weight

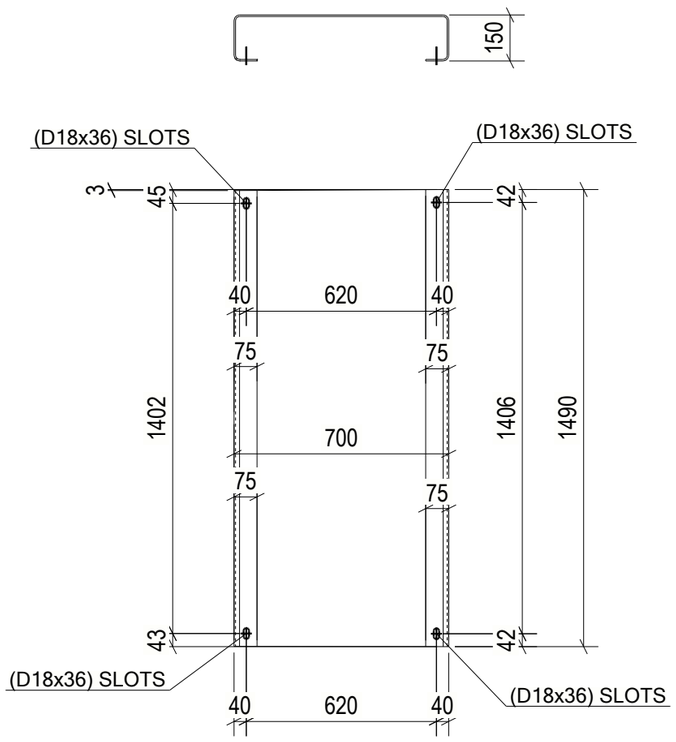

2 REQ'D AS DRAWN MK'D Z8-CHQ024

6 October Monorail Engineering Unit Valid For Construction

GENERAL NOTES:

1. THE DIMENSIONS SHOWN ARE NOMINAL (IN MILLIMETERS), U.N.O.
2. WELD SIZESHALL BE AISC MINIMUM OF 6 mm UNLESS NOTED OTHERWISE.
3. ALL FIELD WELDS SHALL BE INSPECTED PER QUALITY ASSURANCE AND SPECIAL INSPECTIONS.

REFERENCE DRAWINGS

1	93M-BOA-NAT-LOT-04833
2	93M-BOA-NAT-LOT-09170
3	93M-BOA-NAT-LOT-01976
4	93M-BOA-NAT-LOT-20021
5	
6	
7	
8	
9	

6TH OF OCTOBER CITY RAIL TRANSIT MONORAIL

The Authority | Hill International Consultant | ORASCOM BOMBARDIER Main Contractor | INNOVA Structural Designer

KEY PLAN:

SCALE	SHOP DRAWING	DATE
AS SHOWN		12/05/2023

REV	DATE	DSG	CHK	APP	AMENDMENTS	STATUS
B	12/05/2023	M.KH	M.KH	DR.M.M	ISSUED FOR INFORMATION	IFI

DRAWING TITLE

6TH OF OCTOBER MONORAIL SERVICE WALKWAYS ZONE (1008) Z8-CHQ024

Project Code	Rubric	Initiator	Lot	Ref	Number	Revision
93M	0476	ACC	60DEP	DWG	08641	B

Tekla structures

approval is subject to approval of coordination package between multi-discipline

REVIEWED WITH COMMENT MONORAILS PROJECT

All holes are 22mm U.N.O Length & Area & Weight per piece						
Z8-CHQ023	CHQD5*1103.4	S235JR	1	3088.0	6.63	128.9
Mark	Profile	Grade	QTY	Length	Area	Weight

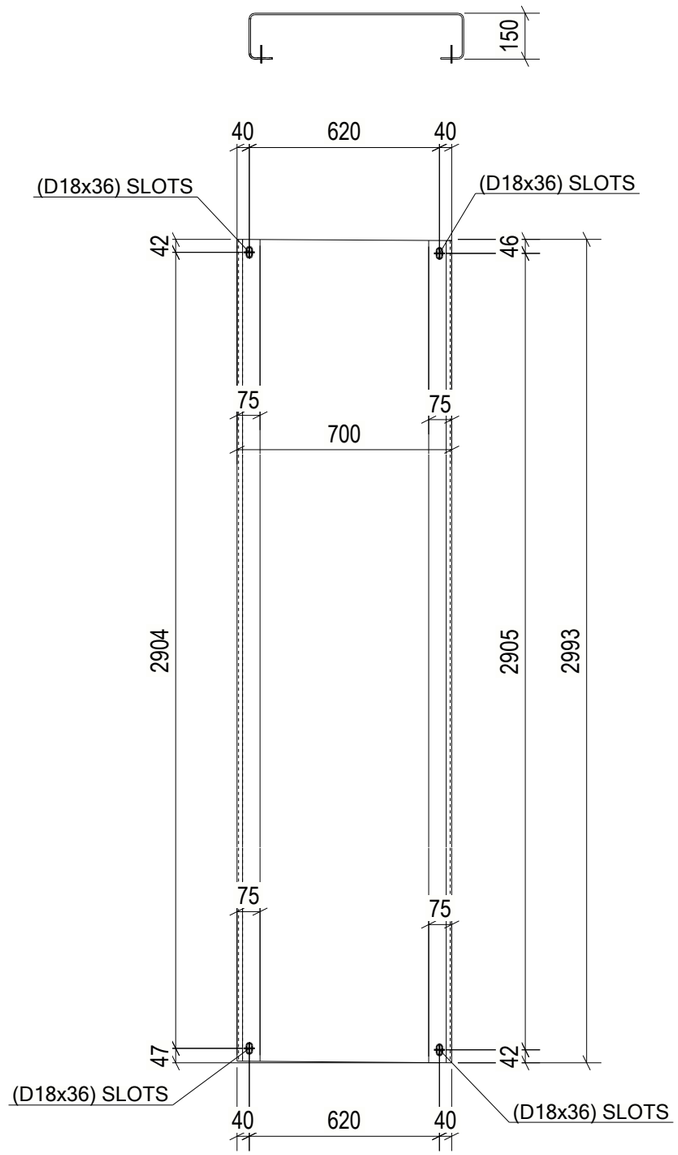

1 REQ'D AS DRAWN MK'D Z8-CHQ023

6 October Monorail Engineering Unit Valid For Construction

GENERAL NOTES:

1. THE DIMENSIONS SHOWN ARE NOMINAL (IN MILLIMETERS), U.N.O.
2. WELD SIZESHALL BE AISC MINIMUM OF 6 mm UNLESS NOTED OTHERWISE.
3. ALL FIELD WELDS SHALL BE INSPECTED PER QUALITY ASSURANCE AND SPECIAL INSPECTIONS.

REFERENCE DRAWINGS

1	93M-BOA-NAT-LOT-04833
2	93M-BOA-NAT-LOT-09170
3	93M-BOA-NAT-LOT-01976
4	93M-BOA-NAT-LOT-20021
5	
6	
7	
8	
9	

6TH OF OCTOBER CITY RAIL TRANSIT MONORAIL

The Authority | Hill International Consultant | ORASCOM BOMBARDIER Main Contractor | INNOVA Structural Designer

KEY PLAN:

SCALE	SHOP DRAWING	DATE
AS SHOWN		12/05/2023

REV	DATE	DSN	CHK	APP	AMENDMENTS	STATUS
B	12/05/2023	M.KH	M.KH	DR.M.M	ISSUED FOR INFORMATION	IFI

DRAWING TITLE

6TH OF OCTOBER MONORAIL SERVICE WALKWAYS ZONE (1008) Z8-CHQ023

Project Code	Rubric	Initiator	Lot	Ref	Number	Revision
93M	0476	ACC	60DEP	DWG	08642	B

Tekla structures

approval is subject to approval of coordination package between multi-discipline

REVIEWED WITH COMMENT MONORAILS PROJECT

All holes are 22mm U.N.O Length & Area & Weight per piece						
Z8-CHQ022	CHQD5*1103.4	S235JR	1	2039.9	4.31	83.7
Mark	Profile	Grade	QTY	Length	Area	Weight

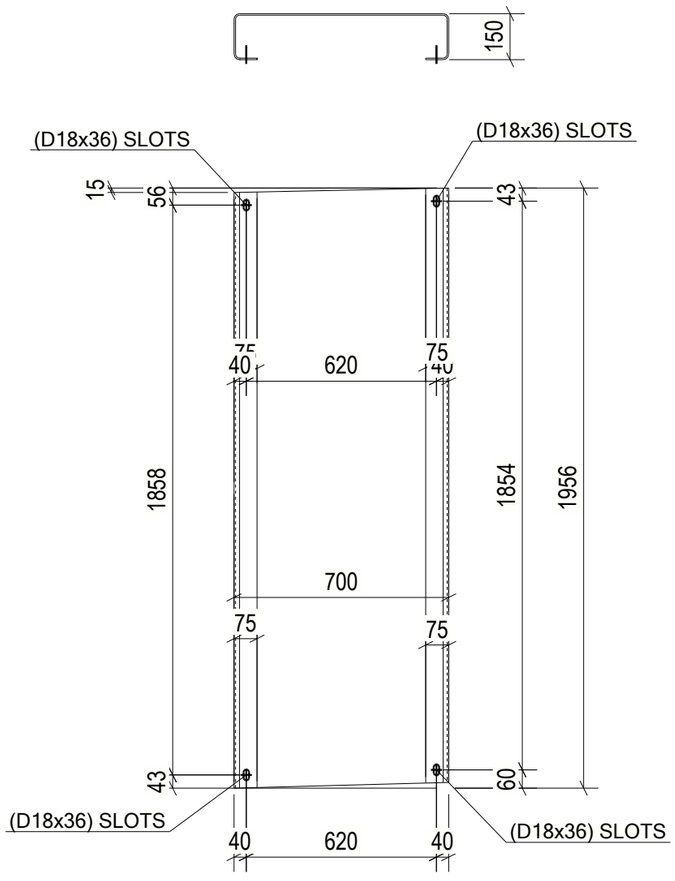

1 REQ'D AS DRAWN MK'D Z8-CHQ022

6 October Monorail Engineering Unit
Valid For Construction

GENERAL NOTES:

1. THE DIMENSIONS SHOWN ARE NOMINAL (IN MILLIMETERS), U.N.O.
2. WELD SIZESHALL BE AISC MINIMUM OF 6 mm UNLESS NOTED OTHERWISE.
3. ALL FIELD WELDS SHALL BE INSPECTED PER QUALITY ASSURANCE AND SPECIAL INSPECTIONS.

REFERENCE DRAWINGS

1	93M-BOA-NAT-LOT-04833
2	93M-BOA-NAT-LOT-09170
3	93M-BOA-NAT-LOT-01976
4	93M-BOA-NAT-LOT-20021
5	
6	
7	
8	
9	

6TH OF OCTOBER CITY RAIL TRANSIT MONORAIL

The Authority | Hill International Consultant | ORASCOM BOMBARDIER Main Contractor | INNOVA Structural Designer

KEY PLAN:

SCALE	SHOP DRAWING	DATE
AS SHOWN		12/05/2023

REV	DATE	DSG	CHK	APP	AMENDMENTS	STATUS
B	12/05/2023	M.KH	M.KH	DR.M.M	ISSUED FOR INFORMATION	IFI

DRAWING TITLE

6TH OF OCTOBER MONORAIL SERVICE WALKWAYS ZONE (1008)
Z8-CHQ022

Project Code	Rubric	Initiator	Lot	Ref	Number	Revision
93M	0476	ACC	60DEP	DWG	08643	B

Tekla structures

approval is subject to approval of coordination package between multi-discipline

REVIEWED WITH COMMENT
MONORAILS PROJECT

All holes are 22mm U.N.O Length & Area & Weight per piece						
Z8-CHQ021	CHQD5*1103.4	S235JR	1	2000.0	4.32	83.9
Mark	Profile	Grade	QTY	Length	Area	Weight

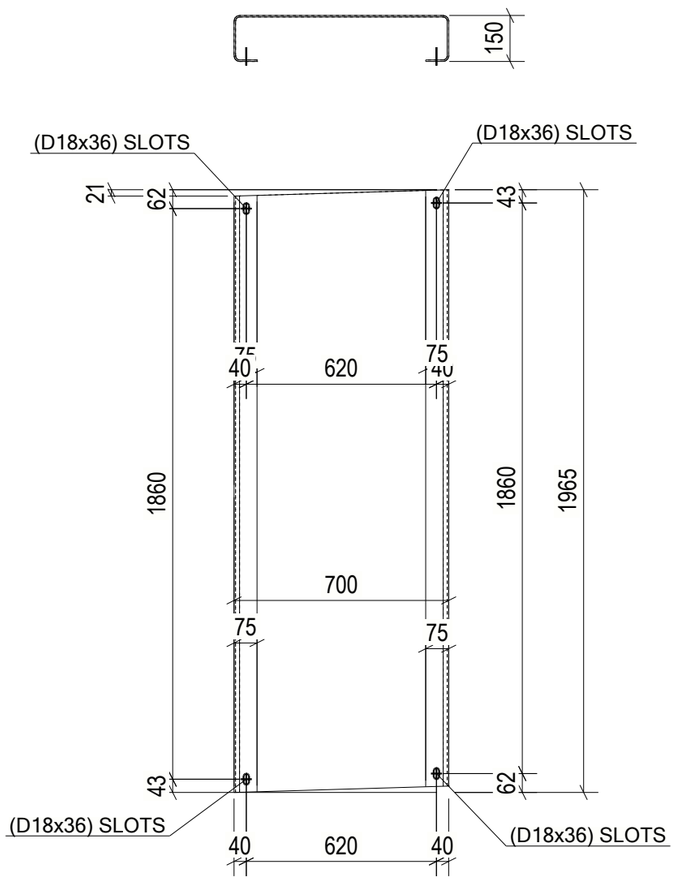

1 REQ'D AS DRAWN MK'D Z8-CHQ021

6 October Monorail
Engineering Unit
Valid For Construction

GENERAL NOTES:

1. THE DIMENSIONS SHOWN ARE NOMINAL (IN MILLIMETERS), U.N.O.
2. WELD SIZESHALL BE AISC MINIMUM OF 6 mm UNLESS NOTED OTHERWISE.
3. ALL FIELD WELDS SHALL BE INSPECTED PER QUALITY ASSURANCE AND SPECIAL INSPECTIONS.

REFERENCE DRAWINGS

1	93M-BOA-NAT-LOT-04833
2	93M-BOA-NAT-LOT-09170
3	93M-BOA-NAT-LOT-01976
4	93M-BOA-NAT-LOT-20021
5	
6	
7	
8	
9	

6TH OF OCTOBER CITY RAIL TRANSIT MONORAIL

The Authority | Hill International Consultant | ORASCOM / BOMBARDIER Main Contractor | INNOVA Structural Designer

KEY PLAN:

SCALE: AS SHOWN | SHOP DRAWING | DATE: 12/05/2023

REV	DATE	DES.	CHK.	APP.	AMENDMENTS	STATUS
B	12/05/2023	M.KH	M.KH	DR.M.M	ISSUED FOR INFORMATION	IFI

DRAWING TITLE
6TH OF OCTOBER MONORAIL
SERVICE WALKWAYS
ZONE (1008)
Z8-CHQ021

Project Code	Rubric	Initiator	Lot	Ref	Number	Revision
9 3 M	0 4 7 6	A C C	6 0 D E	P D W G	0 8 6 4 4	B

Tekla structures

approval is subject to approval of coordination package between multi-discipline

REVIEWED WITH COMMENT MONORAILS PROJECT

All holes are 22mm U.N.O Length & Area & Weight per piece						
Z8-CHQ020	CHQD5*1103.4	S235JR	1	3074.7	6.60	128.4
Mark	Profile	Grade	QTY	Length	Area	Weight

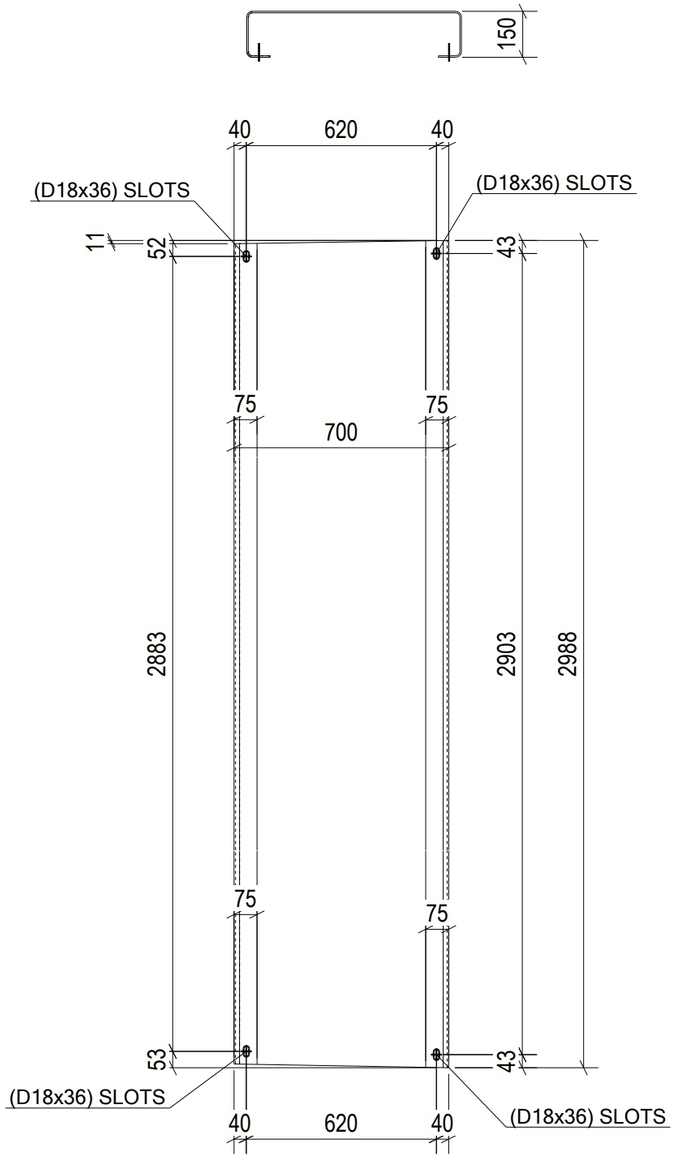

1 REQ'D AS DRAWN MK'D Z8-CHQ020

6 October Monorail Engineering Unit
Valid For Construction

GENERAL NOTES:

1. THE DIMENSIONS SHOWN ARE NOMINAL (IN MILLIMETERS), U.N.O.
2. WELD SIZESHALL BE AISC MINIMUM OF 6 mm UNLESS NOTED OTHERWISE.
3. ALL FIELD WELDS SHALL BE INSPECTED PER QUALITY ASSURANCE AND SPECIAL INSPECTIONS.

REFERENCE DRAWINGS

1	93M-BOA-NAT-LOT-04833
2	93M-BOA-NAT-LOT-09170
3	93M-BOA-NAT-LOT-01976
4	93M-BOA-NAT-LOT-20021
5	
6	
7	
8	
9	

6TH OF OCTOBER CITY RAIL TRANSIT MONORAIL

The Authority | Hill International Consultant | ORASCOM BOMBARDIER Main Contractor | INNOVA Structural Designer

KEY PLAN:

SCALE	SHOP DRAWING	DATE
AS SHOWN		12/05/2023

REV	DATE	DSG	CHK	APP	AMENDMENTS	STATUS
B	12/05/2023	M.KH	M.KH	DR.M.M	ISSUED FOR INFORMATION	IFI

DRAWING TITLE

6TH OF OCTOBER MONORAIL SERVICE WALKWAYS ZONE (1008)
Z8-CHQ020

Project Code	Rubric	Initiator	Lot	Ref	Number	Revision
93M	0476	ACC	60DEP	DWG	08645	B

Tekla structures

approval is subject to approval of coordination package between multi-discipline

REVIEWED WITH COMMENT
MONORAILS PROJECT

All holes are 22mm U.N.O Length & Area & Weight per piece						
Z8-CHQ019	CHQD5*1103.4	S235JR	1	2225.0	4.72	91.7
Mark	Profile	Grade	QTY	Length	Area	Weight

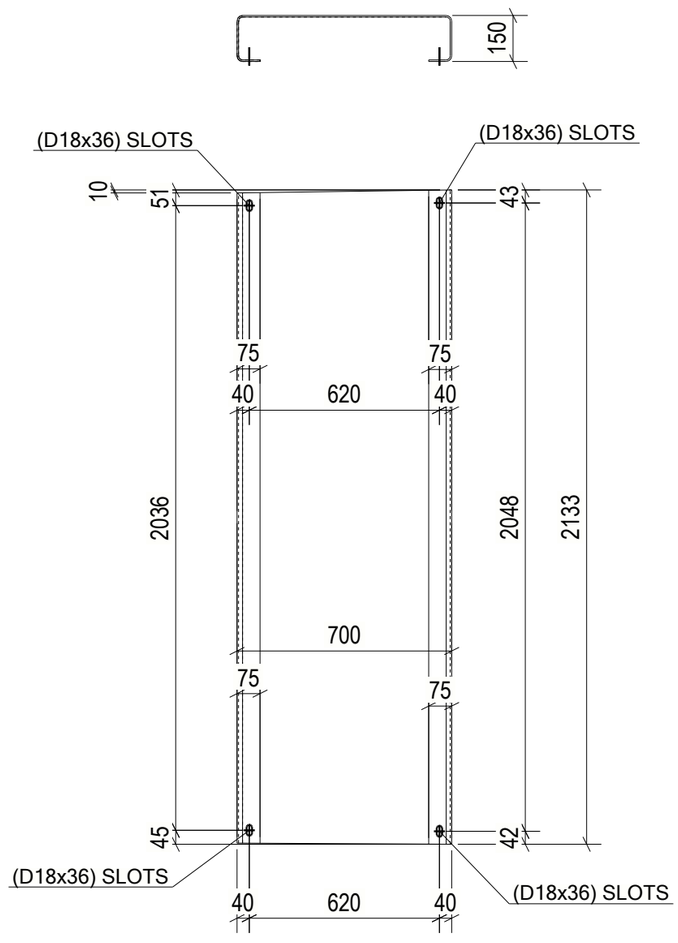

1 REQ'D AS DRAWN MK'D Z8-CHQ019

GENERAL NOTES:

1. THE DIMENSIONS SHOWN ARE NOMINAL (IN MILLIMETERS), U.N.O.
2. WELD SIZESHALL BE AISC MINIMUM OF 6 mm UNLESS NOTED OTHERWISE.
3. ALL FIELD WELDS SHALL BE INSPECTED PER QUALITY ASSURANCE AND SPECIAL INSPECTIONS.

REFERENCE DRAWINGS

1	93M-BOA-NAT-LOT-04833
2	93M-BOA-NAT-LOT-09170
3	93M-BOA-NAT-LOT-01976
4	93M-BOA-NAT-LOT-20021
5	
6	
7	
8	
9	

6TH OF OCTOBER CITY RAIL TRANSIT MONORAIL

The Authority — Hill International (Consultant) — Main Contractor — Structural Designer

KEY PLAN:

6 October Monorail Engineering Unit
Valid For Construction

SCALE: AS SHOWN | SHOP DRAWING | DATE: 12/05/2023

REV	DATE	DES.	CHK.	APP.	AMENDMENTS	STATUS
B	12/05/2023	M.KH	M.KH	DR.M.M	ISSUED FOR INFORMATION	IFI
A	17/04/2023	D.SS	CHK.	APP.	AMENDMENTS	STATUS

DRAWING TITLE
6TH OF OCTOBER MONORAIL
SERVICE WALKWAYS
ZONE (1008)
Z8-CHQ019

Project Code	Rubric	Initiator	Lot	Ref	Number	Revision
9 3 M	0 4 7 6	A C C	6 0 D E P	D W G	0 8 6 4 6	B

Tekla structures

approval is subject to approval of coordination package between multi-discipline

REVIEWED WITH COMMENT
MONORAILS PROJECT

All holes are 22mm U.N.O Length & Area & Weight per piece						
Z8-CHQ018	CHQD5*1103.4	S235JR	1	2218.2	4.71	91.4
Mark	Profile	Grade	QTY	Length	Area	Weight

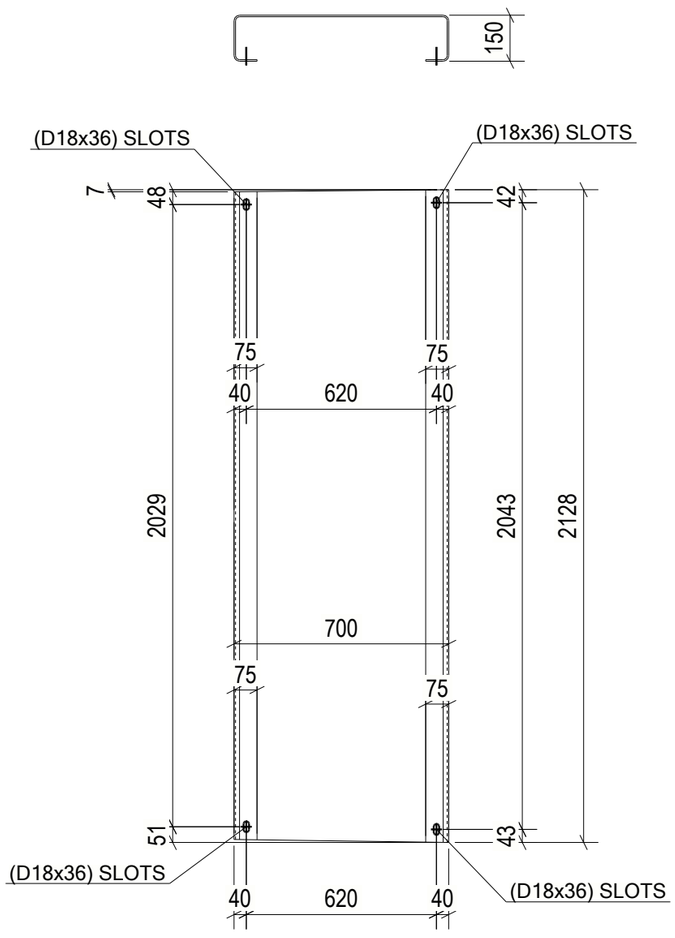

1 REQ'D AS DRAWN MK'D Z8-CHQ018

6 October Monorail Engineering Unit Valid For Construction

GENERAL NOTES:

1. THE DIMENSIONS SHOWN ARE NOMINAL (IN MILLIMETERS), U.N.O.
2. WELD SIZESHALL BE AISC MINIMUM OF 6 mm UNLESS NOTED OTHERWISE.
3. ALL FIELD WELDS SHALL BE INSPECTED PER QUALITY ASSURANCE AND SPECIAL INSPECTIONS.

REFERENCE DRAWINGS

1	93M-BOA-NAT-LOT-04833
2	93M-BOA-NAT-LOT-09170
3	93M-BOA-NAT-LOT-01976
4	93M-BOA-NAT-LOT-20021
5	
6	
7	
8	
9	

6TH OF OCTOBER CITY RAIL TRANSIT MONORAIL

The Authority | Consultant: Hill International | Main Contractor: ORASCOM CONSTRUCTION / BOMBARDIER | Structural Designer: INNOVA

KEY PLAN:

SCALE: AS SHOWN | SHOP DRAWING | DATE: 12/05/2023

REV	DATE	DES.	CHK.	APP.	AMENDMENTS	STATUS
B	12/05/2023	M.KH	M.KH	DR.M.M	ISSUED FOR INFORMATION	IFI
A	17/04/2023	D.SS	C.HK	APP.	AMENDMENTS	STATUS

DRAWING TITLE

6TH OF OCTOBER MONORAIL SERVICE WALKWAYS ZONE (1008)
Z8-CHQ018

Project Code	Rubric	Initiator	Lot	Ref	Number	Revision
9 3 M	0 4 7 6	A C C	6 0 D E P	D W G	0 8 6 4 7	B

Tekla structures

approval is subject to approval of coordination package between multi-discipline

REVIEWED WITH COMMENT MONORAILS PROJECT

All holes are 22mm U.N.O Length & Area & Weight per piece						
Z8-CHQ017	CHQD5*1103.4	S235JR	1	3076.3	6.61	128.5
Mark	Profile	Grade	QTY	Length	Area	Weight

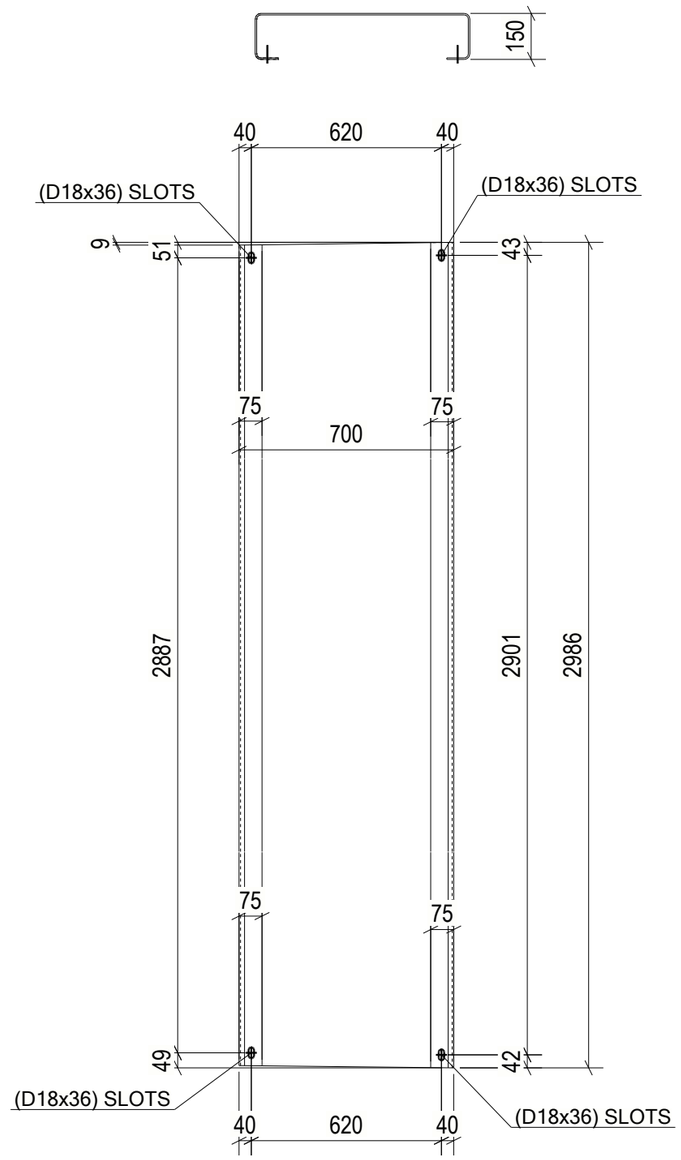

1 REQ'D AS DRAWN MK'D Z8-CHQ017

6 October Monorail Engineering Unit Valid For Construction

GENERAL NOTES:

1. THE DIMENSIONS SHOWN ARE NOMINAL (IN MILLIMETERS), U.N.O.
2. WELD SIZESHALL BE AISC MINIMUM OF 6 mm UNLESS NOTED OTHERWISE.
3. ALL FIELD WELDS SHALL BE INSPECTED PER QUALITY ASSURANCE AND SPECIAL INSPECTIONS.

REFERENCE DRAWINGS

1	93M-BOA-NAT-LOT-04833
2	93M-BOA-NAT-LOT-09170
3	93M-BOA-NAT-LOT-01976
4	93M-BOA-NAT-LOT-20021
5	
6	
7	
8	
9	

6TH OF OCTOBER CITY RAIL TRANSIT MONORAIL

The Authority | Hill International Consultant | ORASCOM BOMBARDIER Main Contractor | INNOVA Structural Designer

KEY PLAN:

SCALE	SHOP DRAWING	DATE
AS SHOWN		12/05/2023

REV	DATE	DSG	CHK	APP	AMENDMENTS	STATUS
B	12/05/2023	M.KH	M.KH	DR.M.M	ISSUED FOR INFORMATION	IFI

DRAWING TITLE

6TH OF OCTOBER MONORAIL SERVICE WALKWAYS ZONE (1008)

Z8-CHQ017

Project Code	Rubric	Initiator	Lot	Ref	Number	Revision
93M	0476	ACC	60DEP	DWG	08648	B

Tekla structures

approval is subject to approval of coordination package between multi-discipline

REVIEWED WITH COMMENT
MONORAILS PROJECT

All holes are 22mm U.N.O Length & Area & Weight per piece

Mark	Profile	Grade	QTY	Length	Area	Weight
Z8-CHQ016	CHQD5*1103.4	S235JR	1	3087.3	6.63	128.9

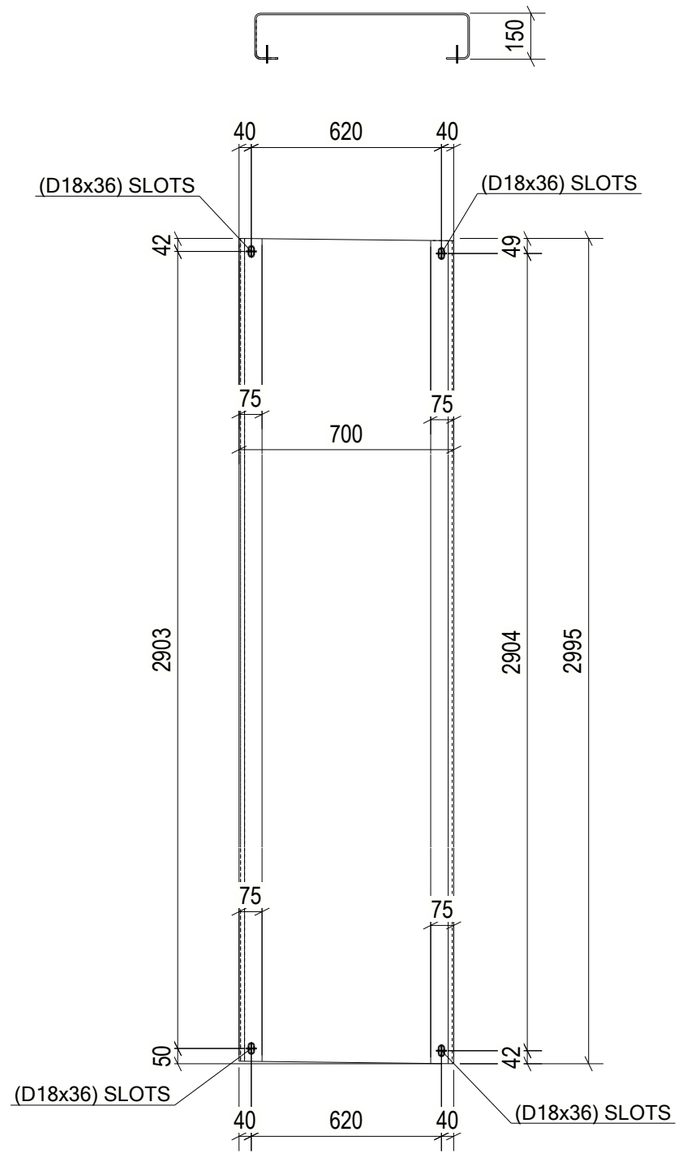

1 REQ'D AS DRAWN MK'D Z8-CHQ016

6 October Monorail Engineering Unit Valid For Construction

GENERAL NOTES:

1. THE DIMENSIONS SHOWN ARE NOMINAL (IN MILLIMETERS), U.N.O.
2. WELD SIZESHALL BE AISC MINIMUM OF 6 mm UNLESS NOTED OTHERWISE.
3. ALL FIELD WELDS SHALL BE INSPECTED PER QUALITY ASSURANCE AND SPECIAL INSPECTIONS.

REFERENCE DRAWINGS

1	93M-BOA-NAT-LOT-04833
2	93M-BOA-NAT-LOT-09170
3	93M-BOA-NAT-LOT-01976
4	93M-BOA-NAT-LOT-20021
5	
6	
7	
8	
9	

6TH OF OCTOBER CITY RAIL TRANSIT MONORAIL

The Authority | Consultant | Main Contractor | Structural Designer

KEY PLAN:

SCALE	SHOP DRAWING	DATE
AS SHOWN		12/05/2023

REV	DATE	DSN	CHK	APP	AMENDMENTS	STATUS
B	12/05/2023	M.KH	M.KH	DR.M.M	ISSUED FOR INFORMATION	IFI

DRAWING TITLE

6TH OF OCTOBER MONORAIL
SERVICE WALKWAYS
ZONE (1008)
Z8-CHQ016

Project Code	Rubric	Initiator	Lot	Ref	Number	Revision
9 3 M	0 4 7 6	A C C	6 0 D E P	D W G	0 8 6 4 9	B

Tekla structures

approval is subject to approval of coordination package between multi-discipline

REVIEWED WITH COMMENT
MONORAILS PROJECT

All holes are 22mm U.N.O Length & Area & Weight per piece						
Z8-CHQ015	CHQD5*1103.4	S235JR	1	3088.3	6.63	128.9
Mark	Profile	Grade	QTY	Length	Area	Weight

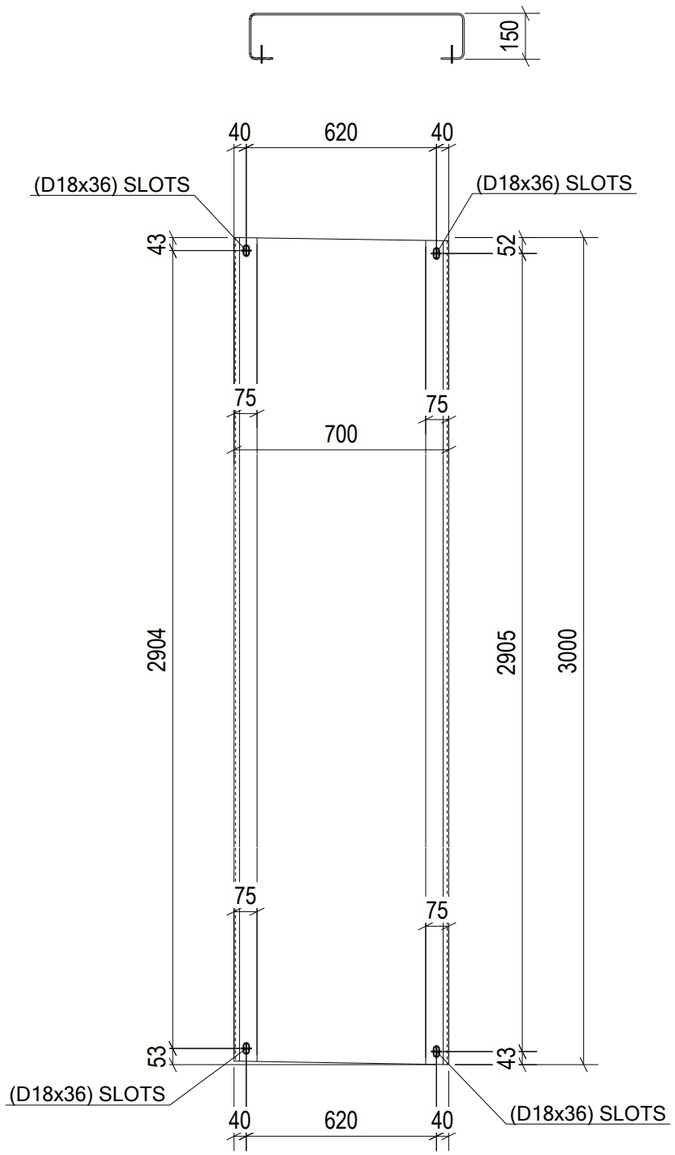

1 REQ'D AS DRAWN MK'D Z8-CHQ015

6 October Monorail Engineering Unit Valid For Construction

GENERAL NOTES:

1. THE DIMENSIONS SHOWN ARE NOMINAL (IN MILLIMETERS), U.N.O.
2. WELD SIZESHALL BE AISC MINIMUM OF 6 mm UNLESS NOTED OTHERWISE.
3. ALL FIELD WELDS SHALL BE INSPECTED PER QUALITY ASSURANCE AND SPECIAL INSPECTIONS.

REFERENCE DRAWINGS

1	93M-BOA-NAT-LOT-04833
2	93M-BOA-NAT-LOT-09170
3	93M-BOA-NAT-LOT-01976
4	93M-BOA-NAT-LOT-20021
5	
6	
7	
8	
9	

6TH OF OCTOBER CITY RAIL TRANSIT MONORAIL

The Authority | Consultant: Hill International | Main Contractor: ORASCOM CONSTRUCTION, BOMBARDIER | Structural Designer: INNOVA TRANSPORTATION

KEY PLAN:

SCALE	SHOP DRAWING	DATE
AS SHOWN		12/05/2023

REV	DATE	DSN	CHK	APP	AMENDMENTS	STATUS
B	12/05/2023	M.KH	M.KH	DR.M.M	ISSUED FOR INFORMATION	IFI

DRAWING TITLE

6TH OF OCTOBER MONORAIL
SERVICE WALKWAYS
ZONE (1008)
Z8-CHQ015

Project Code	Rubric	Initiator	Lot	Ref	Number	Revision
9 3	M 0 4 7 6	A C C	6 0 D E P	D W G	0 8 6 5 0	B

Tekla structures

approval is subject to approval of coordination package between multi-discipline

REVIEWED WITH COMMENT MONORAILS PROJECT

All holes are 22mm U.N.O Length & Area & Weight per piece						
Z8-CHQ014	CHQD5*1103.4	S235JR	1	3081.0	6.61	128.6
Mark	Profile	Grade	QTY	Length	Area	Weight

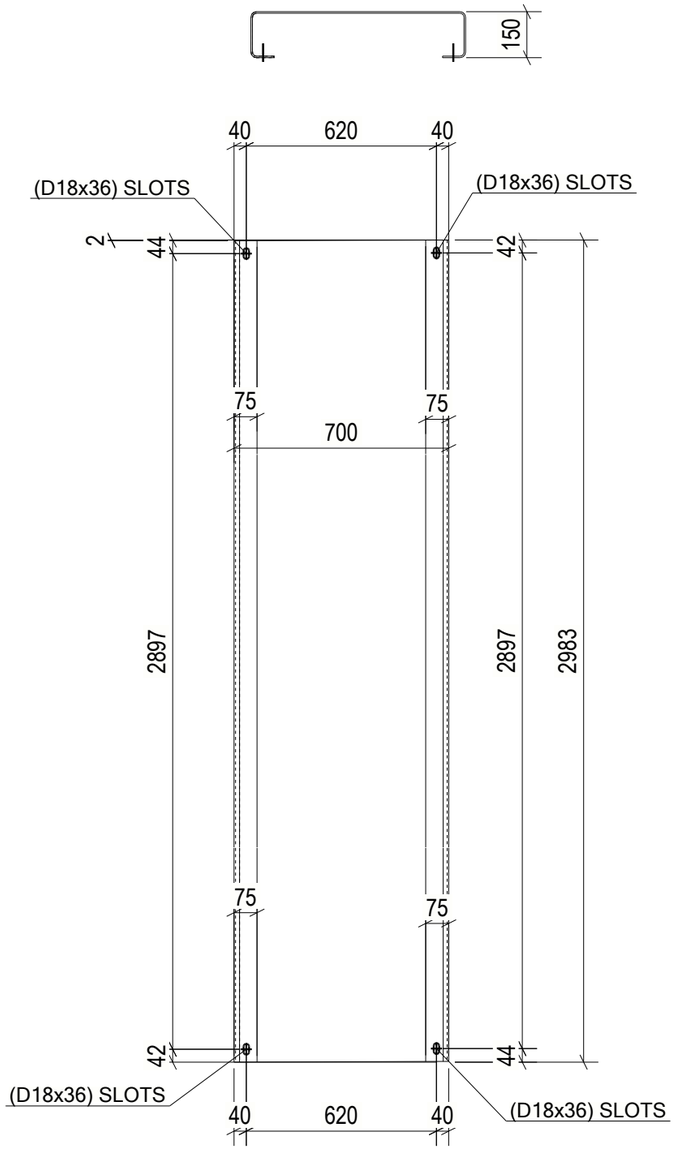

1 REQ'D AS DRAWN MK'D Z8-CHQ014

6 October Monorail Engineering Unit Valid For Construction

GENERAL NOTES:

1. THE DIMENSIONS SHOWN ARE NOMINAL (IN MILLIMETERS), U.N.O.
2. WELD SIZESHALL BE AISC MINIMUM OF 6 mm UNLESS NOTED OTHERWISE.
3. ALL FIELD WELDS SHALL BE INSPECTED PER QUALITY ASSURANCE AND SPECIAL INSPECTIONS.

REFERENCE DRAWINGS

1	93M-BOA-NAT-LOT-04833
2	93M-BOA-NAT-LOT-09170
3	93M-BOA-NAT-LOT-01976
4	93M-BOA-NAT-LOT-20021
5	
6	
7	
8	
9	

6TH OF OCTOBER CITY RAIL TRANSIT MONORAIL

The Authority | Hill International Consultant | ORASCOM BOMBARDIER Main Contractor | INNOVA Structural Designer

KEY PLAN:

SCALE	SHOP DRAWING	DATE
AS SHOWN		12/05/2023

REV	DATE	DSN	CHK	APP	AMENDMENTS	STATUS
B	12/05/2023	M.KH	M.KH	DR.M.M	ISSUED FOR INFORMATION	IFI

DRAWING TITLE

6TH OF OCTOBER MONORAIL SERVICE WALKWAYS ZONE (1008) Z8-CHQ014

Project Code	Rubric	Initiator	Lot	Ref	Number	Revision
93M	0476	ACC	60DEP	DWG	08651	B

Tekla structures

approval is subject to approval of coordination package between multi-discipline

REVIEWED WITH COMMENT
MONORAILS PROJECT

All holes are 22mm U.N.O Length & Area & Weight per piece

Mark	Profile	Grade	QTY	Length	Area	Weight
Z8-CHQ013	CHQD5*1103.4	S235JR	1	3091.0	6.64	129.0

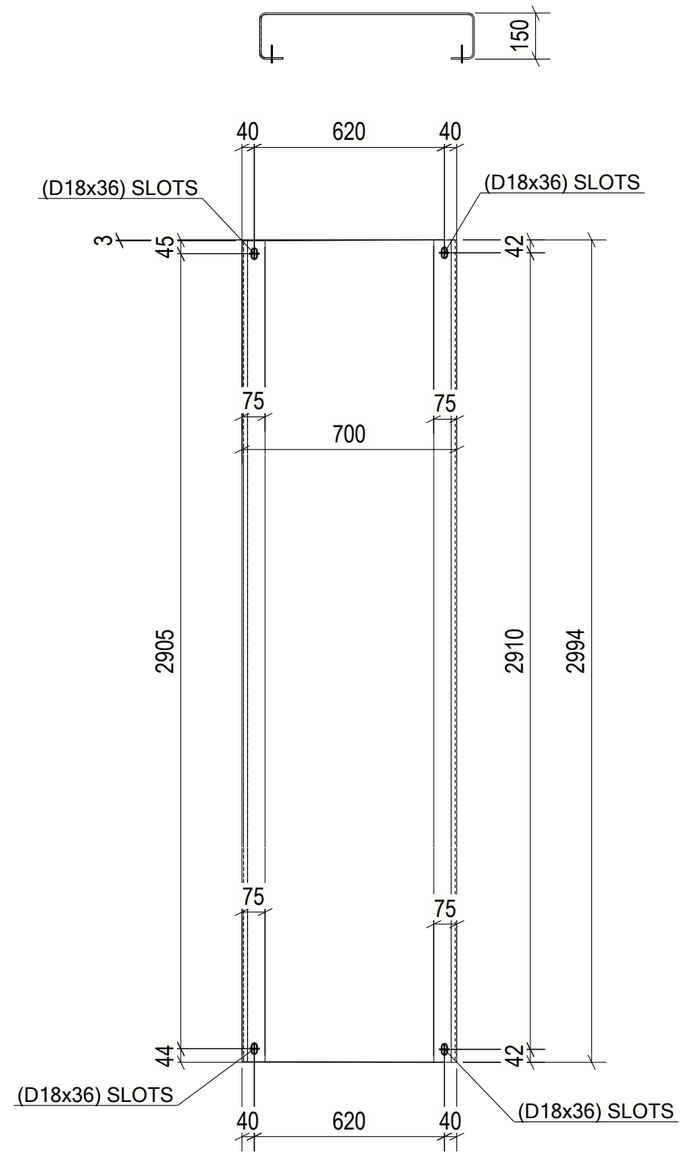

1 REQ'D AS DRAWN MK'D Z8-CHQ013

6 October Monorail Engineering Unit Valid For Construction

GENERAL NOTES:

1. THE DIMENSIONS SHOWN ARE NOMINAL (IN MILLIMETERS), U.N.O.
2. WELD SIZESHALL BE AISC MINIMUM OF 6 mm UNLESS NOTED OTHERWISE.
3. ALL FIELD WELDS SHALL BE INSPECTED PER QUALITY ASSURANCE AND SPECIAL INSPECTIONS.

REFERENCE DRAWINGS

1	93M-BOA-NAT-LOT-04833
2	93M-BOA-NAT-LOT-09170
3	93M-BOA-NAT-LOT-01976
4	93M-BOA-NAT-LOT-20021
5	
6	
7	
8	
9	

6TH OF OCTOBER CITY RAIL TRANSIT MONORAIL

The Authority | Consultant: Hill International | Main Contractor: ORASCOM CONSTRUCTION / BOMBARDIER | Structural Designer: INNOVA TRANSPORTATION

KEY PLAN:

REV	DATE	DSN	CHK	APP	AMENDMENTS	STATUS
B	12/05/2023	M.KH	M.KH	DR.M.M	ISSUED FOR INFORMATION	IFI

SCALE: AS SHOWN | SHOP DRAWING | DATE: 12/05/2023

DRAWING TITLE
6TH OF OCTOBER MONORAIL
SERVICE WALKWAYS
ZONE (1008)
Z8-CHQ013

Project Code	Rubric	Initiator	Lot	Ref	Number	Revision
9 3 M	0 4 7 6	A C C	6 0 D E P	D W G	0 8 6 5 2	B

Tekla structures

approval is subject to approval of coordination package between multi-discipline

REVIEWED WITH COMMENT MONORAILS PROJECT

All holes are 22mm U.N.O Length & Area & Weight per piece						
Z8-CHQ012	CHQD5*1103.4	S235JR	1	3092.4	6.64	129.1
Mark	Profile	Grade	QTY	Length	Area	Weight

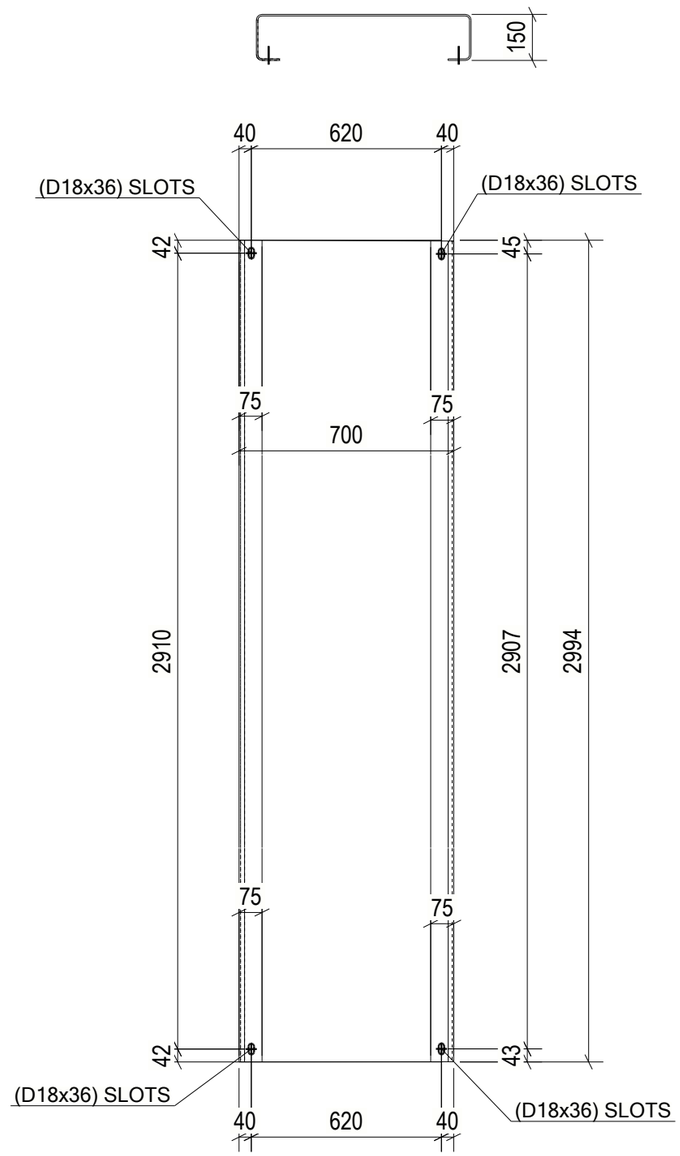

1 REQ'D AS DRAWN MK'D Z8-CHQ012

6 October Monorail Engineering Unit Valid For Construction

GENERAL NOTES:

1. THE DIMENSIONS SHOWN ARE NOMINAL (IN MILLIMETERS), U.N.O.
2. WELD SIZESHALL BE AISC MINIMUM OF 6 mm UNLESS NOTED OTHERWISE.
3. ALL FIELD WELDS SHALL BE INSPECTED PER QUALITY ASSURANCE AND SPECIAL INSPECTIONS.

REFERENCE DRAWINGS

1	93M-BOA-NAT-LOT-04833
2	93M-BOA-NAT-LOT-09170
3	93M-BOA-NAT-LOT-01976
4	93M-BOA-NAT-LOT-20021
5	
6	
7	
8	
9	

6TH OF OCTOBER CITY RAIL TRANSIT MONORAIL

The Authority | Hill International Consultant | ORASCOM BOMBARDIER Main Contractor | INNOVA Structural Designer

KEY PLAN:

SCALE	SHOP DRAWING	DATE
AS SHOWN		12/05/2023

REV	DATE	DSG	CHK	APP	AMENDMENTS	STATUS
B	12/05/2023	M.KH	M.KH	DR.M.M	ISSUED FOR INFORMATION	IFI

DRAWING TITLE

6TH OF OCTOBER MONORAIL SERVICE WALKWAYS ZONE (1008) Z8-CHQ012

Project Code	Rubric	Initiator	Lot	Ref	Number	Revision
93M	0476	ACC	60DEP	DWG	08653	B

Tekla structures

approval is subject to approval of coordination package between multi-discipline

REVIEWED WITH COMMENT MONORAILS PROJECT

All holes are 22mm U.N.O Length & Area & Weight per piece						
Z8-CHQ011	CHQD5*1103.4	S235JR	1	3088.7	6.63	128.9
Mark	Profile	Grade	QTY	Length	Area	Weight

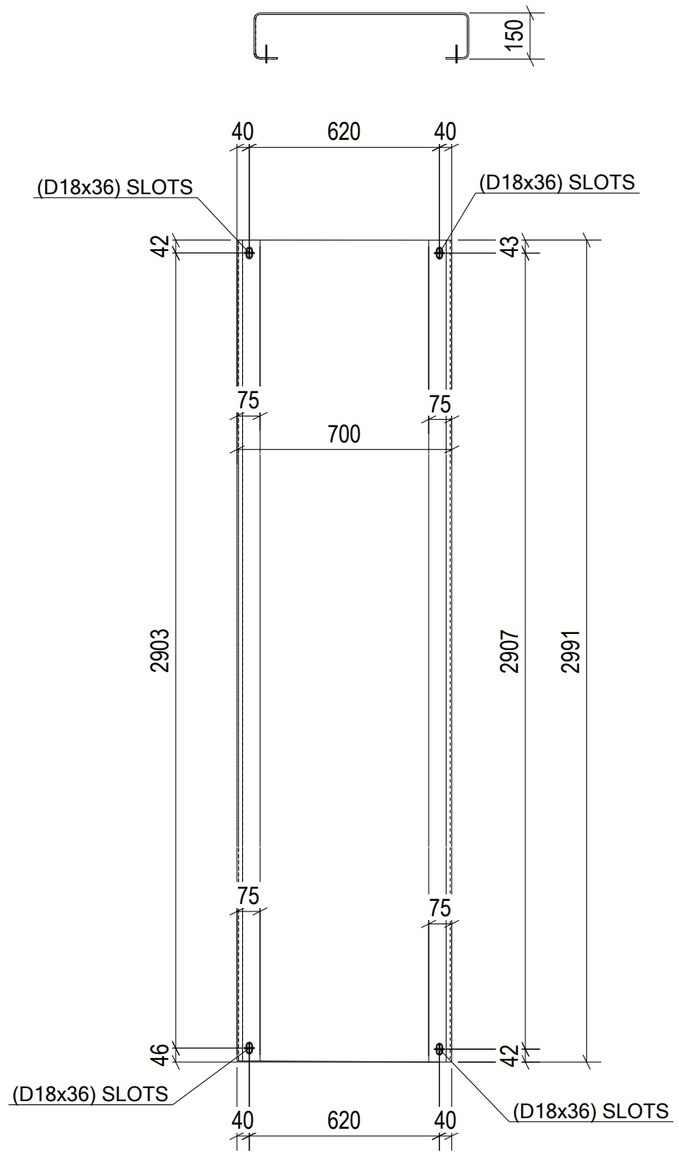

1 REQ'D AS DRAWN MK'D Z8-CHQ011

6 October Monorail Engineering Unit Valid For Construction

GENERAL NOTES:

1. THE DIMENSIONS SHOWN ARE NOMINAL (IN MILLIMETERS), U.N.O.
2. WELD SIZESHALL BE AISC MINIMUM OF 6 mm UNLESS NOTED OTHERWISE.
3. ALL FIELD WELDS SHALL BE INSPECTED PER QUALITY ASSURANCE AND SPECIAL INSPECTIONS.

REFERENCE DRAWINGS

1	93M-BOA-NAT-LOT-04833
2	93M-BOA-NAT-LOT-09170
3	93M-BOA-NAT-LOT-01976
4	93M-BOA-NAT-LOT-20021
5	
6	
7	
8	
9	

6TH OF OCTOBER CITY RAIL TRANSIT MONORAIL

The Authority | Hill International Consultant | ORASCOM BOMBARDIER Main Contractor | INNOVA Structural Designer

KEY PLAN:

SCALE	SHOP DRAWING	DATE
AS SHOWN		12/05/2023

REV	DATE	DSN	CHK	APP	AMENDMENTS	STATUS
B	12/05/2023	M.KH	M.KH	DR.M.M	ISSUED FOR INFORMATION	IFI

DRAWING TITLE

6TH OF OCTOBER MONORAIL SERVICE WALKWAYS ZONE (1008) Z8-CHQ011

Project Code	Rubric	Initiator	Lot	Ref	Number	Revision
93M	0476	ACC	60DEP	DWG	08654	B

Tekla structures

approval is subject to approval of coordination package between multi-discipline

REVIEWED WITH COMMENT MONORAILS PROJECT

All holes are 22mm U.N.O Length & Area & Weight per piece						
Z8-CHQ010	CHQD5*1103.4	S235JR	1	3094.5	6.64	129.1
Mark	Profile	Grade	QTY	Length	Area	Weight

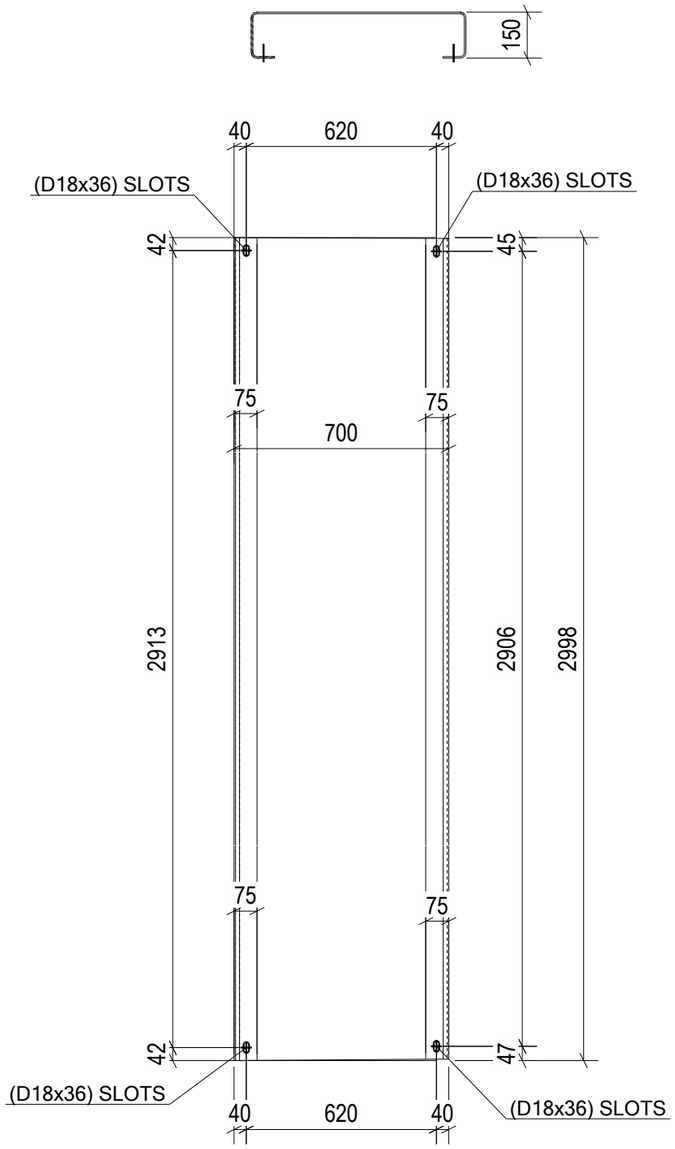

1 REQ'D AS DRAWN MK'D Z8-CHQ010

6 October Monorail Engineering Unit Valid For Construction

GENERAL NOTES:

1. THE DIMENSIONS SHOWN ARE NOMINAL (IN MILLIMETERS), U.N.O.
2. WELD SIZESHALL BE AISC MINIMUM OF 6 mm UNLESS NOTED OTHERWISE.
3. ALL FIELD WELDS SHALL BE INSPECTED PER QUALITY ASSURANCE AND SPECIAL INSPECTIONS.

REFERENCE DRAWINGS

1	93M-BOA-NAT-LOT-04833
2	93M-BOA-NAT-LOT-09170
3	93M-BOA-NAT-LOT-01976
4	93M-BOA-NAT-LOT-20021
5	
6	
7	
8	
9	

6TH OF OCTOBER CITY RAIL TRANSIT MONORAIL

The Authority | Hill International Consultant | ORASCOM BOMBARDIER Main Contractor | INNOVA Structural Designer

KEY PLAN:

SCALE	SHOP DRAWING	DATE
AS SHOWN		12/05/2023

REV	DATE	DSN	CHK	APP	AMENDMENTS	STATUS
B	12/05/2023	M.KH	M.KH	DR.M.M	ISSUED FOR INFORMATION	IFI

DRAWING TITLE

6TH OF OCTOBER MONORAIL SERVICE WALKWAYS ZONE (1008) Z8-CHQ010

Project Code	Rubric	Initiator	Lot	Ref	Number	Revision
93M	0476	ACC	60DEP	DWG	08655	B

Tekla structures

approval is subject to approval of coordination package between multi-discipline

REVIEWED WITH COMMENT MONORAILS PROJECT

All holes are 22mm U.N.O Length & Area & Weight per piece						
Z8-CHQ009	CHQD5*1103.4	S235JR	1	3083.9	6.62	128.7
Mark	Profile	Grade	QTY	Length	Area	Weight

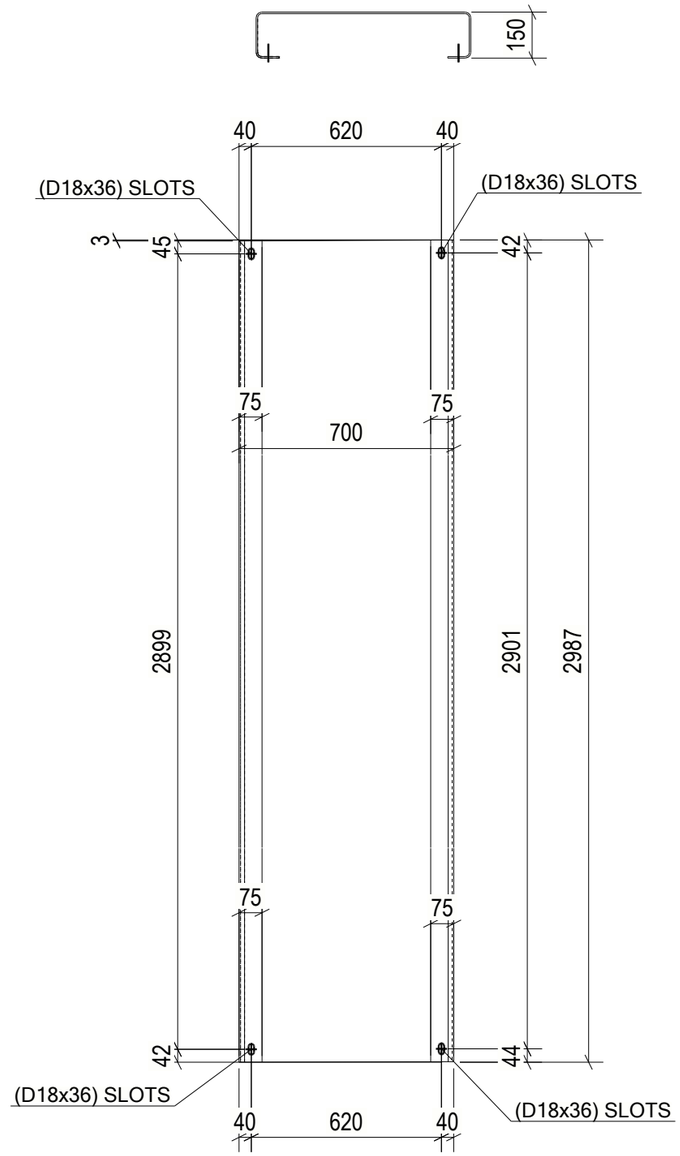

1 REQ'D AS DRAWN MK'D Z8-CHQ009

6 October Monorail Engineering Unit Valid For Construction

GENERAL NOTES:

1. THE DIMENSIONS SHOWN ARE NOMINAL (IN MILLIMETERS), U.N.O.
2. WELD SIZESHALL BE AISC MINIMUM OF 6 mm UNLESS NOTED OTHERWISE.
3. ALL FIELD WELDS SHALL BE INSPECTED PER QUALITY ASSURANCE AND SPECIAL INSPECTIONS.

REFERENCE DRAWINGS

1	93M-BOA-NAT-LOT-04833
2	93M-BOA-NAT-LOT-09170
3	93M-BOA-NAT-LOT-01976
4	93M-BOA-NAT-LOT-20021
5	
6	
7	
8	
9	

6TH OF OCTOBER CITY RAIL TRANSIT MONORAIL

The Authority | Hill International Consultant | ORASCOM BOMBARDIER Main Contractor | INNOVA Structural Designer

KEY PLAN:

SCALE	SHOP DRAWING	DATE
AS SHOWN		12/05/2023

REV	DATE	DSN	CHK	APP	AMENDMENTS	STATUS
B	12/05/2023	M.KH	M.KH	DR.M.M	ISSUED FOR INFORMATION	IFI

DRAWING TITLE

6TH OF OCTOBER MONORAIL SERVICE WALKWAYS ZONE (1008) Z8-CHQ009

Project Code	Rubric	Initiator	Lot	Ref	Number	Revision
93M	0476	ACC	60DEP	DWG	08656	B

Tekla structures

approval is subject to approval of coordination package between multi-discipline

REVIEWED WITH COMMENT
MONORAILS PROJECT

All holes are 22mm U.N.O Length & Area & Weight per piece						
Z8-CHQ008	CHQD5*1103.4	S235JR	1	3092.9	6.64	129.1
Mark	Profile	Grade	QTY	Length	Area	Weight

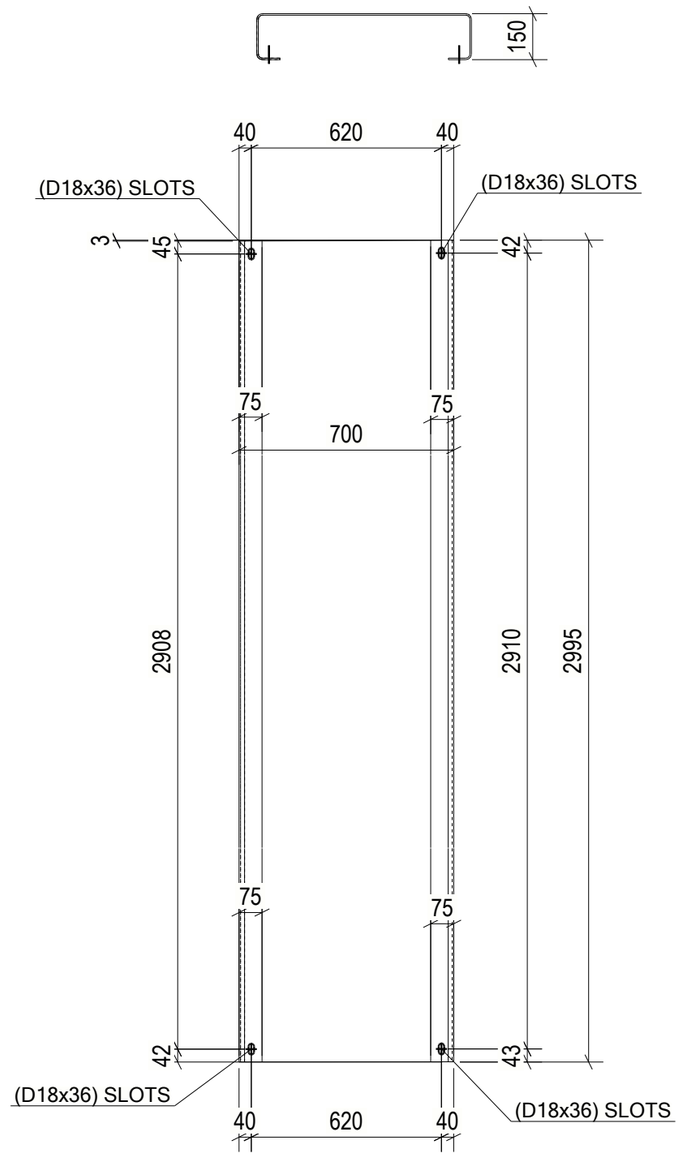

1 REQ'D AS DRAWN MK'D Z8-CHQ008

6 October Monorail Engineering Unit Valid For Construction

GENERAL NOTES:

1. THE DIMENSIONS SHOWN ARE NOMINAL (IN MILLIMETERS), U.N.O.
2. WELD SIZESHALL BE AISC MINIMUM OF 6 mm UNLESS NOTED OTHERWISE.
3. ALL FIELD WELDS SHALL BE INSPECTED PER QUALITY ASSURANCE AND SPECIAL INSPECTIONS.

REFERENCE DRAWINGS

1	93M-BOA-NAT-LOT-04833
2	93M-BOA-NAT-LOT-09170
3	93M-BOA-NAT-LOT-01976
4	93M-BOA-NAT-LOT-20021
5	
6	
7	
8	
9	

6TH OF OCTOBER CITY RAIL TRANSIT MONORAIL

The Authority | Consultant: Hill International | Main Contractor: ORASCOM CONSTRUCTION, BOMBARDIER | Structural Designer: INNOVA TRANSPORTATION

KEY PLAN:

SCALE	SHOP DRAWING	DATE
AS SHOWN		12/05/2023

REV	DATE	DSN	CHK	APP	AMENDMENTS	STATUS
B	12/05/2023	M.KH	M.KH	DR.M.M	ISSUED FOR INFORMATION	IFI

DRAWING TITLE
6TH OF OCTOBER MONORAIL
SERVICE WALKWAYS
ZONE (1008)
Z8-CHQ008

Project Code	Rubric	Initiator	Lot	Ref	Number	Revision
9 3 M	0 4 7 6	A C C	6 0 D E P	D W G	0 8 6 5 7	B

Tekla structures

approval is subject to approval of coordination package between multi-discipline

REVIEWED WITH COMMENT MONORAILS PROJECT

All holes are 22mm U.N.O Length & Area & Weight per piece						
Z8-CHQ007	CHQD5*1103.4	S235JR	1	2092.3	4.42	86.0
Mark	Profile	Grade	QTY	Length	Area	Weight

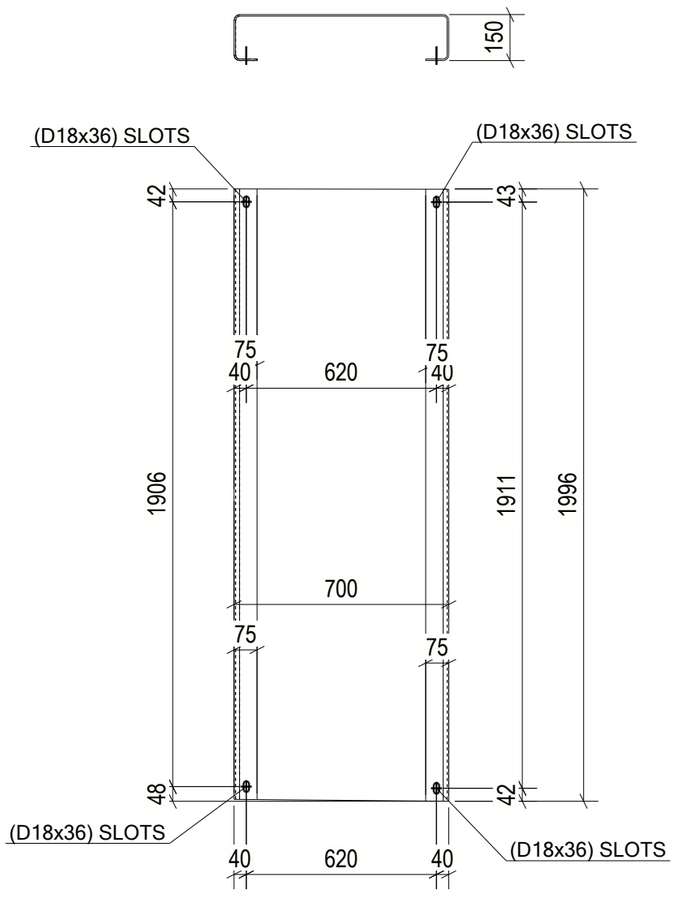

1 REQ'D AS DRAWN MK'D Z8-CHQ007

6 October Monorail Engineering Unit
Valid For Construction

GENERAL NOTES:

1. THE DIMENSIONS SHOWN ARE NOMINAL (IN MILLIMETERS), U.N.O.
2. WELD SIZESHALL BE AISC MINIMUM OF 6 mm UNLESS NOTED OTHERWISE.
3. ALL FIELD WELDS SHALL BE INSPECTED PER QUALITY ASSURANCE AND SPECIAL INSPECTIONS.

REFERENCE DRAWINGS

1	93M-BOA-NAT-LOT-04833
2	93M-BOA-NAT-LOT-09170
3	93M-BOA-NAT-LOT-01976
4	93M-BOA-NAT-LOT-20021
5	
6	
7	
8	
9	

6TH OF OCTOBER CITY RAIL TRANSIT MONORAIL

The Authority | Hill International Consultant | ORASCOM BOMBARDIER Main Contractor | INNOVA Structural Designer

KEY PLAN:

SCALE	SHOP DRAWING	DATE
AS SHOWN		12/05/2023

REV	DATE	DSG	CHK	APP	AMENDMENTS	STATUS
B	12/05/2023	M.KH	M.KH	DR.M.M	ISSUED FOR INFORMATION	IFI

DRAWING TITLE

6TH OF OCTOBER MONORAIL SERVICE WALKWAYS ZONE (1008)
Z8-CHQ007

Project Code	Rubric	Initiator	Lot	Ref	Number	Revision
93M	0476	ACC	60DEP	DWG	08658	B

Tekla structures

approval is subject to approval of coordination package between multi-discipline

REVIEWED WITH COMMENT MONORAILS PROJECT

All holes are 22mm U.N.O Length & Area & Weight per piece						
Z8-CHQ006	CHQD5*1103.4	S235JR	1	2086.6	4.41	85.7
Mark	Profile	Grade	QTY	Length	Area	Weight

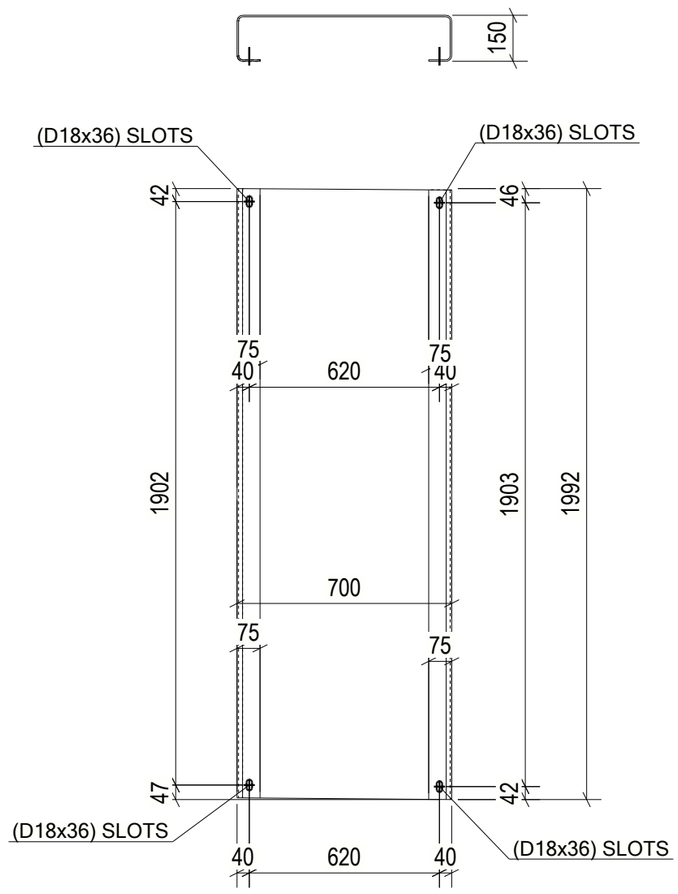

1 REQ'D AS DRAWN MK'D Z8-CHQ006

6 October Monorail Engineering Unit Valid For Construction

GENERAL NOTES:

1. THE DIMENSIONS SHOWN ARE NOMINAL (IN MILLIMETERS), U.N.O.
2. WELD SIZESHALL BE AISC MINIMUM OF 6 mm UNLESS NOTED OTHERWISE.
3. ALL FIELD WELDS SHALL BE INSPECTED PER QUALITY ASSURANCE AND SPECIAL INSPECTIONS.

REFERENCE DRAWINGS

1	93M-BOA-NAT-LOT-04833
2	93M-BOA-NAT-LOT-09170
3	93M-BOA-NAT-LOT-01976
4	93M-BOA-NAT-LOT-20021
5	
6	
7	
8	
9	

6TH OF OCTOBER CITY RAIL TRANSIT MONORAIL

The Authority — Hill International Consultant — ORASCOM BOMBARDIER Main Contractor — INNOVA Structural Designer

KEY PLAN:

SCALE	SHOP DRAWING	DATE
AS SHOWN		12/05/2023

REV	DATE	DSG	CHK	APP	AMENDMENTS	STATUS
B	12/05/2023	M.KH	M.KH	DR.M.M	ISSUED FOR INFORMATION	IFI

DRAWING TITLE

6TH OF OCTOBER MONORAIL SERVICE WALKWAYS ZONE (1008) Z8-CHQ006

Project Code	Rubric	Initiator	Lot	Ref	Number	Revision
93M	0476	ACC	60DEP	DWG	08659	B

Tekla structures

approval is subject to approval of coordination package between multi-discipline

REVIEWED WITH COMMENT MONORAILS PROJECT

All holes are 22mm U.N.O Length & Area & Weight per piece						
Z8-CHQ005	CHQD5*1103.4	S235JR	1	2089.2	4.41	85.8
Mark	Profile	Grade	QTY	Length	Area	Weight

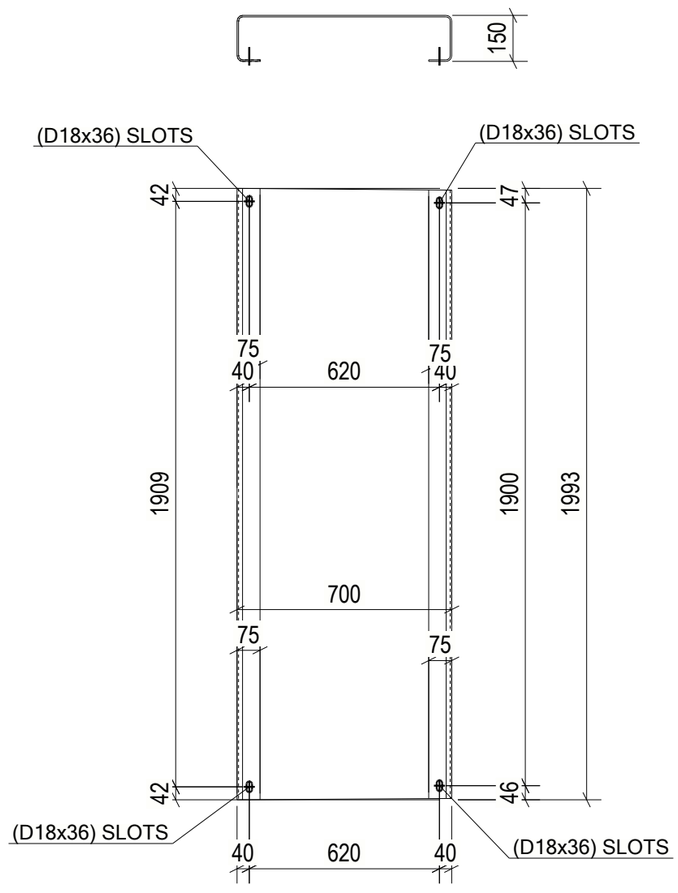

1 REQ'D AS DRAWN MK'D Z8-CHQ005

6 October Monorail Engineering Unit Valid For Construction

GENERAL NOTES:

1. THE DIMENSIONS SHOWN ARE NOMINAL (IN MILLIMETERS), U.N.O.
2. WELD SIZESHALL BE AISC MINIMUM OF 6 mm UNLESS NOTED OTHERWISE.
3. ALL FIELD WELDS SHALL BE INSPECTED PER QUALITY ASSURANCE AND SPECIAL INSPECTIONS.

REFERENCE DRAWINGS

1	93M-BOA-NAT-LOT-04833
2	93M-BOA-NAT-LOT-09170
3	93M-BOA-NAT-LOT-01976
4	93M-BOA-NAT-LOT-20021
5	
6	
7	
8	
9	

6TH OF OCTOBER CITY RAIL TRANSIT MONORAIL

The Authority | Hill International Consultant | ORASCOM BOMBARDIER Main Contractor | INNOVA Structural Designer

KEY PLAN:

SCALE	SHOP DRAWING	DATE
AS SHOWN		12/05/2023

REV	DATE	DSG	CHK	APP	AMENDMENTS	STATUS
B	12/05/2023	M.KH	M.KH	DR.M.M	ISSUED FOR INFORMATION	IFI

DRAWING TITLE

6TH OF OCTOBER MONORAIL SERVICE WALKWAYS ZONE (1008)
Z8-CHQ005

Project Code	Rubric	Initiator	Lot	Ref	Number	Revision
93M	0476	ACC	60DEP	DWG	08660	B

Tekla structures

approval is subject to approval of coordination package between multi-discipline

REVIEWED WITH COMMENT
MONORAILS PROJECT

All holes are 22mm U.N.O Length & Area & Weight per piece						
Z8-CHQ004	CHQD5*1103.4	S235JR	1	3095.5	6.64	129.2
Mark	Profile	Grade	QTY	Length	Area	Weight

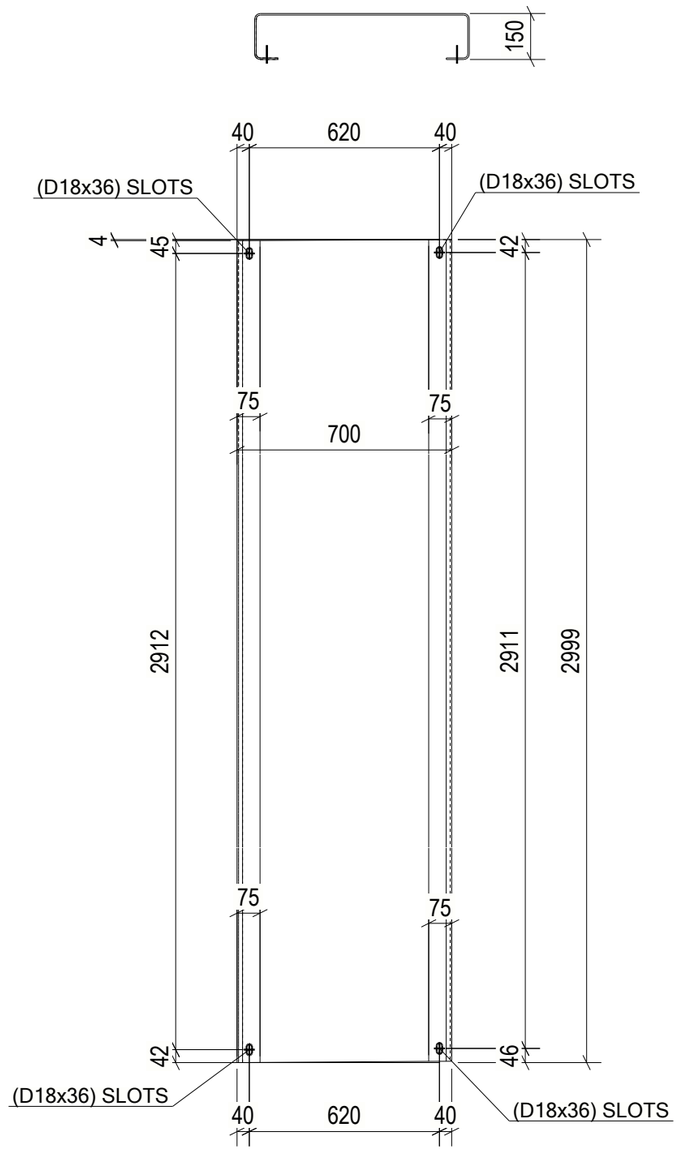

1 REQ'D AS DRAWN MK'D Z8-CHQ004

6 October Monorail Engineering Unit Valid For Construction

GENERAL NOTES:

1. THE DIMENSIONS SHOWN ARE NOMINAL (IN MILLIMETERS), U.N.O.
2. WELD SIZESHALL BE AISC MINIMUM OF 6 mm UNLESS NOTED OTHERWISE.
3. ALL FIELD WELDS SHALL BE INSPECTED PER QUALITY ASSURANCE AND SPECIAL INSPECTIONS.

REFERENCE DRAWINGS

1	93M-BOA-NAT-LOT-04833
2	93M-BOA-NAT-LOT-09170
3	93M-BOA-NAT-LOT-01976
4	93M-BOA-NAT-LOT-20021
5	
6	
7	
8	
9	

6TH OF OCTOBER CITY RAIL TRANSIT MONORAIL

The Authority | Consultant: Hill International | Main Contractor: ORASCOM CONSTRUCTION, BOMBARDIER | Structural Designer: INNOVA TRANSPORTATION

KEY PLAN:

SCALE	SHOP DRAWING	DATE
AS SHOWN		12/05/2023

REV	DATE	DSN	CHK	APP	AMENDMENTS	STATUS
B	12/05/2023	M.KH	M.KH	DR.M.M	ISSUED FOR INFORMATION	IFI

DRAWING TITLE
6TH OF OCTOBER MONORAIL
SERVICE WALKWAYS
ZONE (1008)
Z8-CHQ004

Project Code	Rubric	Initiator	Lot	Ref	Number	Revision
9 3 M	0 4 7 6	A C C	6 0 D E P	D W G	0 8 6 6 1	B

Tekla structures

approval is subject to approval of coordination package between multi-discipline

REVIEWED WITH COMMENT
MONORAILS PROJECT

All holes are 22mm U.N.O Length & Area & Weight per piece

Mark	Profile	Grade	QTY	Length	Area	Weight
Z8-CHQ003	CHQD5*1103.4	S235JR	1	3083.2	6.62	128.7

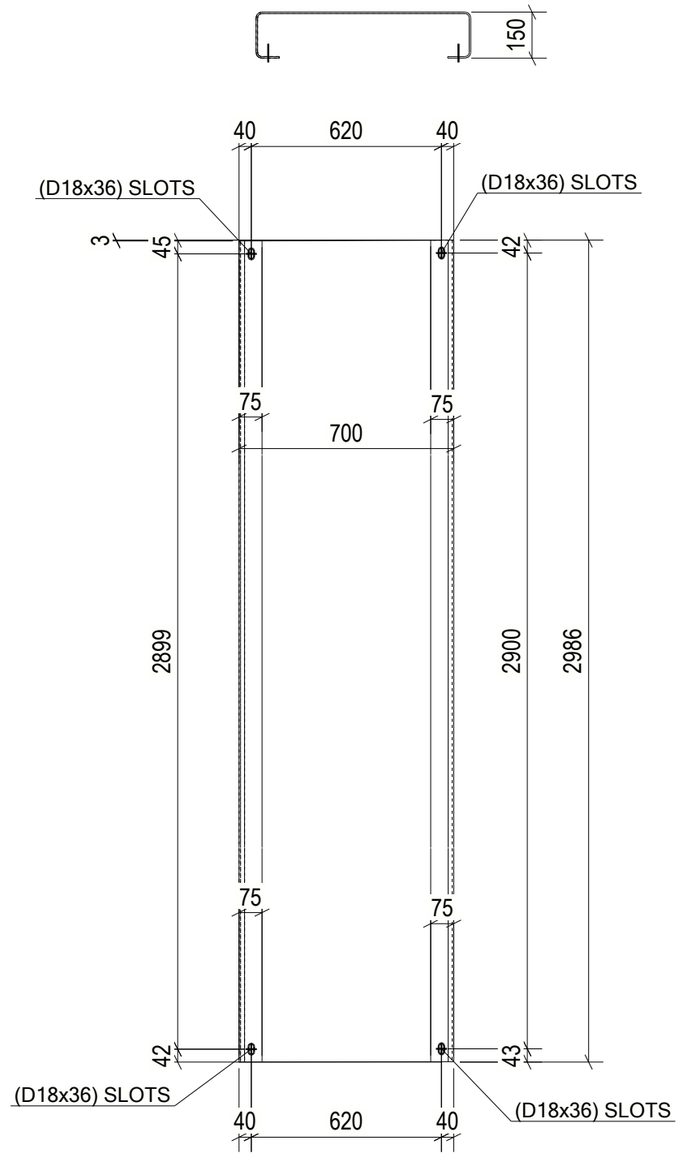

1 REQ'D AS DRAWN MK'D Z8-CHQ003

6 October Monorail
Engineering Unit
Valid For Construction

GENERAL NOTES:

1. THE DIMENSIONS SHOWN ARE NOMINAL (IN MILLIMETERS), U.N.O.
2. WELD SIZESHALL BE AISC MINIMUM OF 6 mm UNLESS NOTED OTHERWISE.
3. ALL FIELD WELDS SHALL BE INSPECTED PER QUALITY ASSURANCE AND SPECIAL INSPECTIONS.

REFERENCE DRAWINGS

1	93M-BOA-NAT-LOT-04833
2	93M-BOA-NAT-LOT-09170
3	93M-BOA-NAT-LOT-01976
4	93M-BOA-NAT-LOT-20021
5	
6	
7	
8	
9	

6TH OF OCTOBER CITY RAIL TRANSIT MONORAIL

The Authority | Consultant: Hill International | Main Contractor | Structural Designer

KEY PLAN:

REV	DATE	DSN	CHK	APP	AMENDMENTS	STATUS
B	12/05/2023	M.KH	M.KH	DR.M.M	ISSUED FOR INFORMATION	IFI

SCALE: AS SHOWN | SHOP DRAWING | DATE: 12/05/2023

DRAWING TITLE
6TH OF OCTOBER MONORAIL
SERVICE WALKWAYS
ZONE (1008)
Z8-CHQ003

Project Code	Rubric	Initiator	Lot	Ref	Number	Revision
9 3 M	0 4 7 6	A C C	6 0 D E P	D W G	0 8 6 6 2	B

Tekla structures

approval is subject to approval of coordination package between multi-discipline

REVIEWED WITH COMMENT
MONORAILS PROJECT

All holes are 22mm U.N.O Length & Area & Weight per piece						
Z8-CHQ002	CHQD5*1103.4	S235JR	3	3090.1	6.63	129.0
Mark	Profile	Grade	QTY	Length	Area	Weight

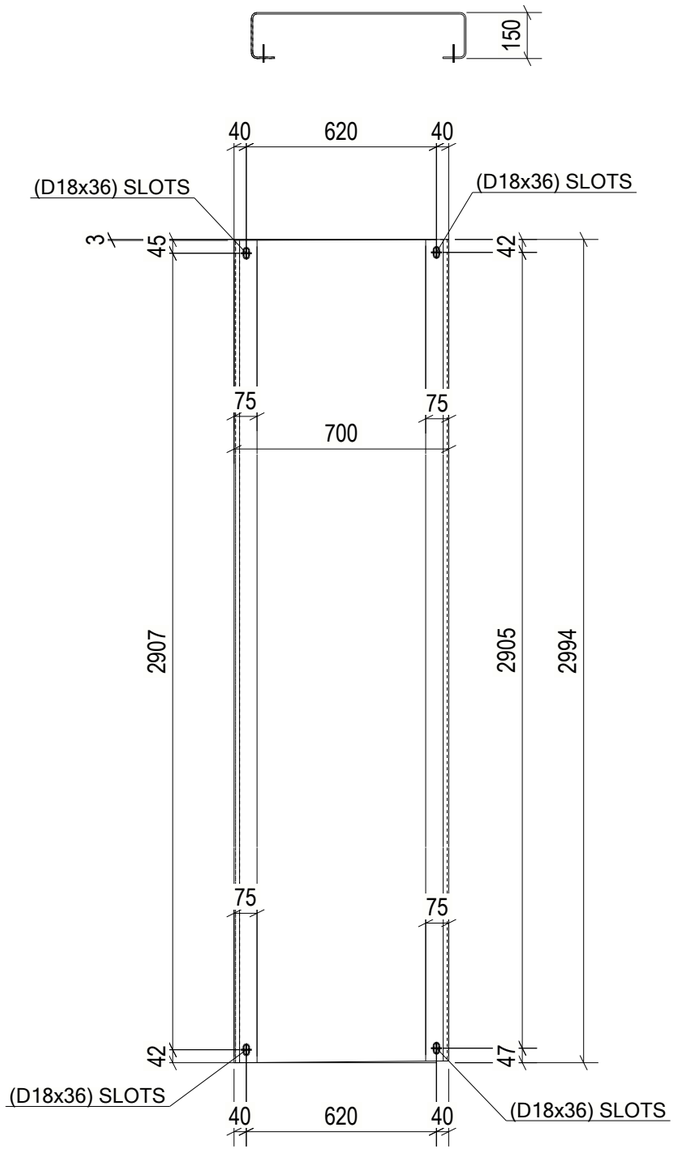

3 REQ'D AS DRAWN MK'D Z8-CHQ002

6 October Monorail Engineering Unit Valid For Construction

GENERAL NOTES:

1. THE DIMENSIONS SHOWN ARE NOMINAL (IN MILLIMETERS), U.N.O.
2. WELD SIZESHALL BE AISC MINIMUM OF 6 mm UNLESS NOTED OTHERWISE.
3. ALL FIELD WELDS SHALL BE INSPECTED PER QUALITY ASSURANCE AND SPECIAL INSPECTIONS.

REFERENCE DRAWINGS

1	93M-BOA-NAT-LOT-04833
2	93M-BOA-NAT-LOT-09170
3	93M-BOA-NAT-LOT-01976
4	93M-BOA-NAT-LOT-20021
5	
6	
7	
8	
9	

6TH OF OCTOBER CITY RAIL TRANSIT MONORAIL

The Authority | Hill International Consultant | ORASCOM / BOMBARDIER Main Contractor | INNOVA Structural Designer

KEY PLAN:

SCALE	SHOP DRAWING	DATE
AS SHOWN		12/05/2023

REV	DATE	DSN	CHK	APP	AMENDMENTS	STATUS
B	12/05/2023	M.KH	M.KH	DR.M.M	ISSUED FOR INFORMATION	IFI

DRAWING TITLE
6TH OF OCTOBER MONORAIL
SERVICE WALKWAYS
ZONE (1008)
Z8-CHQ002

Project Code	Rubric	Initiator	Lot	Ref	Number	Revision
9 3	M 0 4 7 6	A C C	6 0 D E P	D W G	0 8 6 6 3	B

Tekla structures

approval is subject to approval of coordination package between multi-discipline

REVIEWED WITH COMMENT
MONORAILS PROJECT

All holes are 22mm U.N.O Length & Area & Weight per piece

Mark	Profile	Grade	QTY	Length	Area	Weight
Z8-CHQ001	CHQD5*1103.4	S235JR	1	3091.6	6.64	129.1

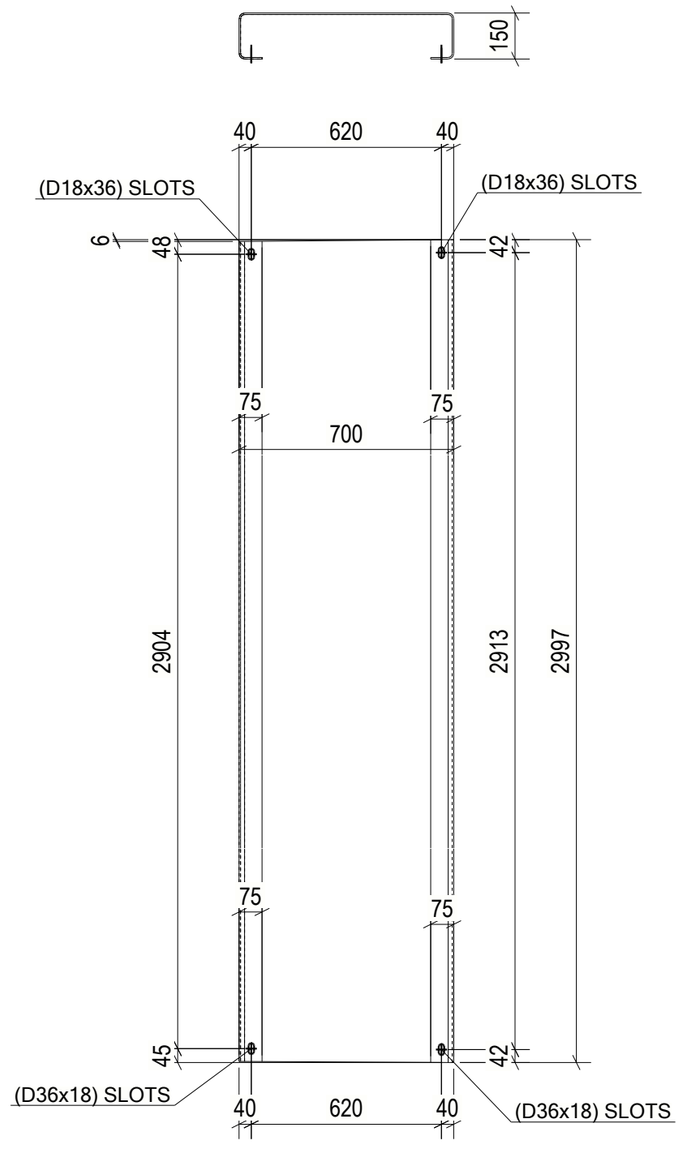

1 REQ'D AS DRAWN MK'D Z8-CHQ001

6 October Monorail Engineering Unit Valid For Construction

GENERAL NOTES:

1. THE DIMENSIONS SHOWN ARE NOMINAL (IN MILLIMETERS), U.N.O.
2. WELD SIZESHALL BE AISC MINIMUM OF 6 mm UNLESS NOTED OTHERWISE.
3. ALL FIELD WELDS SHALL BE INSPECTED PER QUALITY ASSURANCE AND SPECIAL INSPECTIONS.

REFERENCE DRAWINGS

1	93M-BOA-NAT-LOT-04833
2	93M-BOA-NAT-LOT-09170
3	93M-BOA-NAT-LOT-01976
4	93M-BOA-NAT-LOT-20021
5	
6	
7	
8	
9	

6TH OF OCTOBER CITY RAIL TRANSIT MONORAIL

The Authority | Consultant: Hill International | Main Contractor: ORASCOM CONSTRUCTION, Six Construct, BOMBARDIER | Structural Designer: INNOVA TRANSPORTATION

KEY PLAN:

SCALE	SHOP DRAWING	DATE
AS SHOWN		12/05/2023

REV	DATE	DSN	CHK	APP	AMENDMENTS	STATUS
B	12/05/2023	M.KH	M.KH	DR.M.M	ISSUED FOR INFORMATION	IFI

DRAWING TITLE

6TH OF OCTOBER MONORAIL
SERVICE WALKWAYS
ZONE (1008)
Z8-CHQ001

Project Code	Rubric	Initiator	Lot	Ref	Number	Revision
9 3	M 0 4 7 6	A C C	6 0 D E P	D W G	0 8 6 6 4	B

Tekla structures

approval is subject to approval of coordination package between multi-discipline

REVIEWED WITH COMMENT
MONORAILS PROJECT

All holes are 22mm U.N.O Length & Area & Weight per piece						
Z8-BR058	L70X70X7	S235JR	1	979.3	0.27	7.2
Mark	Profile	Grade	QTY	Length	Area	Weight

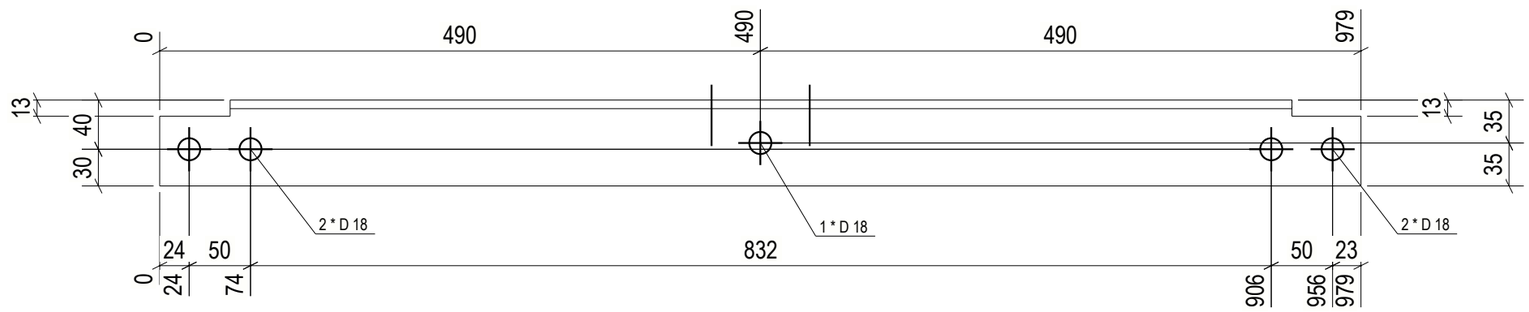

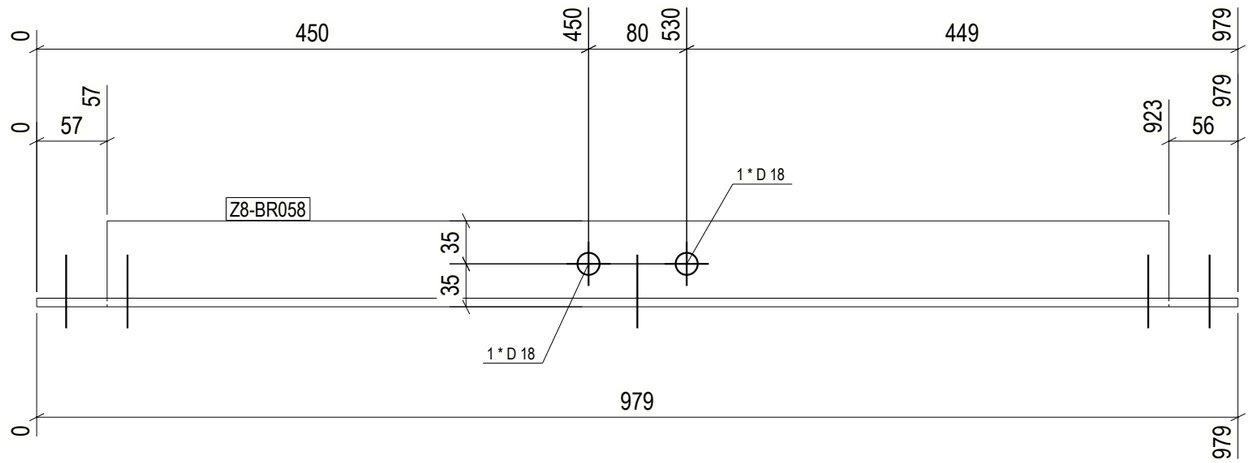

1 REQ'D AS DRAWN MK'D Z8-BR058

6 October Monorail
Engineering Unit
Valid For Construction

GENERAL NOTES:

1. THE DIMENSIONS SHOWN ARE NOMINAL (IN MILLIMETERS), U.N.O.
2. WELD SIZESHALL BE AISC MINIMUM OF 6 mm UNLESS NOTED OTHERWISE.
3. ALL FIELD WELDS SHALL BE INSPECTED PER QUALITY ASSURANCE AND SPECIAL INSPECTIONS.

REFERENCE DRAWINGS

1	93M-BOA-NAT-LOT-04833
2	93M-BOA-NAT-LOT-09170
3	93M-BOA-NAT-LOT-01976
4	93M-BOA-NAT-LOT-20021
5	
6	
7	
8	
9	

6TH OF OCTOBER CITY RAIL TRANSIT MONORAIL

The Authority | Hill International Consultant | Main Contractor | Structural Designer

KEY PLAN:

SCALE: AS SHOWN | SHOP DRAWING | DATE: 12/05/2023

REV	DATE	DSN	CHK	APP	AMENDMENTS	STATUS
B	12/05/2023	M.KH	M.KH	DR.M.M	ISSUED FOR INFORMATION	IFI

DRAWING TITLE

6TH OF OCTOBER MONORAIL
SERVICE WALKWAYS
ZONE (1008)
Z8-BR058

Project Code	Rubric	Initiator	Lot	Ref	Number	Revision
9 3	M 0 4 7 6	A C C	6 0 D E P	D W G	0 8 6 6 5	B

Tekla structures

approval is subject to approval of coordination package between multi-discipline

REVIEWED WITH COMMENT
MONORAILS PROJECT

All holes are 22mm U.N.O Length & Area & Weight per piece

Mark	Profile	Grade	QTY	Length	Area	Weight
Z8-BR057	L80*8	S235JR	1	3469.7	1.11	33.1

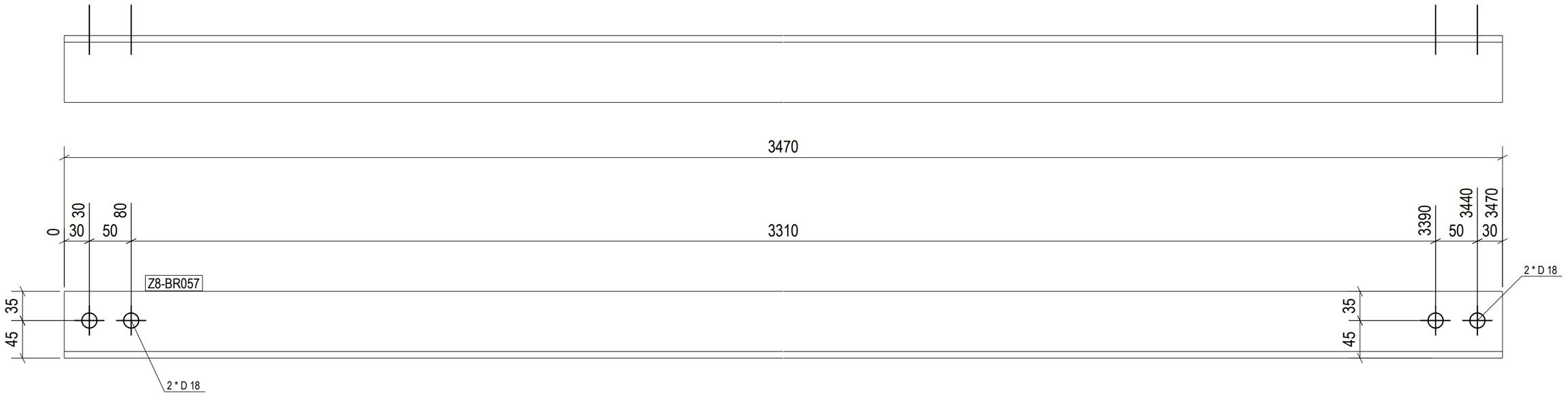

1 REQ'D AS DRAWN MK'D Z8-BR057

6 October Monorail Engineering Unit Valid For Construction

GENERAL NOTES:

1. THE DIMENSIONS SHOWN ARE NOMINAL (IN MILLIMETERS), U.N.O.
2. WELD SIZESHALL BE AISC MINIMUM OF 6 mm UNLESS NOTED OTHERWISE.
3. ALL FIELD WELDS SHALL BE INSPECTED PER QUALITY ASSURANCE AND SPECIAL INSPECTIONS.

REFERENCE DRAWINGS

1	93M-BOA-NAT-LOT-04833
2	93M-BOA-NAT-LOT-09170
3	93M-BOA-NAT-LOT-01976
4	93M-BOA-NAT-LOT-20021
5	
6	
7	
8	
9	

6TH OF OCTOBER CITY RAIL TRANSIT MONORAIL

The Authority | Consultant: Hill International | Main Contractor: ORASCOM CONSTRUCTION, BOMBARDIER | Structural Designer: INNOVA

KEY PLAN:

SCALE: AS SHOWN | SHOP DRAWING | DATE: 12/05/2023

REV	DATE	DRN	CHK	APP	AMENDMENT DESCRIPTION	STATUS
B	12/05/2023	M.KH	M.KH	DR.M.M	ISSUED FOR INFORMATION	IFI

DRAWING TITLE

6TH OF OCTOBER MONORAIL
SERVICE WALKWAYS
ZONE (1008)
Z8-BR057

Project Code	Rubric	Initiator	Lot	Ref	Number	Revision
9 3	M 0 4 7 6	A C C	6 0 D E P	D W G	0 8 6 6 6	B

Tekla structures

approval is subject to approval of coordination package between multi-discipline

REVIEWED WITH COMMENT
MONORAILS PROJECT

All holes are 22mm U.N.O Length & Area & Weight per piece						
Z8-BR056	L80*8	S235JR	1	3493.4	1.12	33.3
Mark	Profile	Grade	QTY	Length	Area	Weight

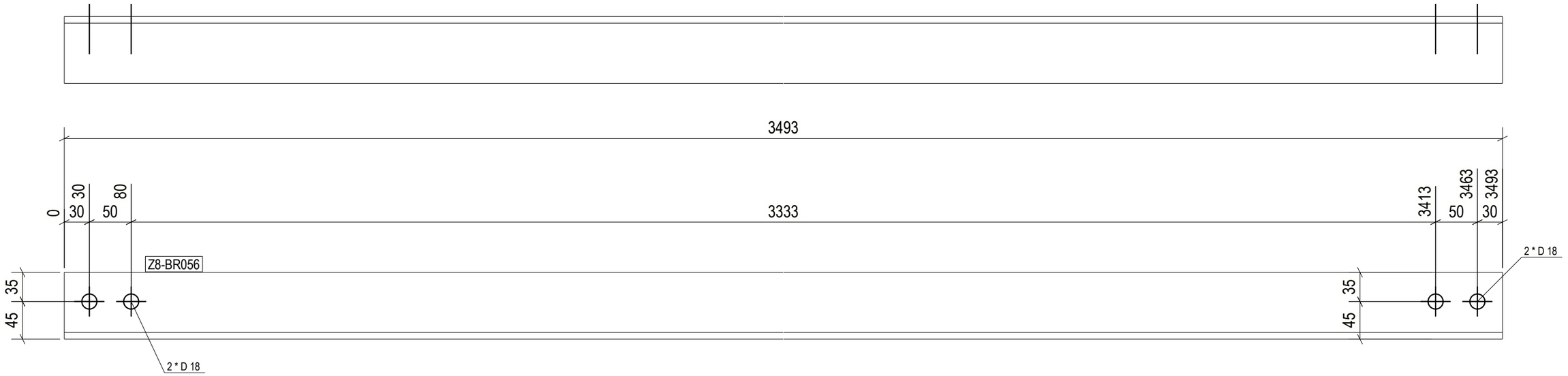

1 REQ'D AS DRAWN MK'D Z8-BR056

6 October Monorail
Engineering Unit
Valid For Construction

GENERAL NOTES:

1. THE DIMENSIONS SHOWN ARE NOMINAL (IN MILLIMETERS), U.N.O.
2. WELD SIZESHALL BE AISC MINIMUM OF 6 mm UNLESS NOTED OTHERWISE.
3. ALL FIELD WELDS SHALL BE INSPECTED PER QUALITY ASSURANCE AND SPECIAL INSPECTIONS.

REFERENCE DRAWINGS

1	93M-BOA-NAT-LOT-04833
2	93M-BOA-NAT-LOT-09170
3	93M-BOA-NAT-LOT-01976
4	93M-BOA-NAT-LOT-20021
5	
6	
7	
8	
9	

6TH OF OCTOBER CITY RAIL TRANSIT MONORAIL

The Authority | Hill International Consultant | Main Contractor | Structural Designer

KEY PLAN:

SCALE: AS SHOWN | SHOP DRAWING | DATE: 12/05/2023

REV	DATE	DRN	CHK	APP	AMENDMENT DESCRIPTION	STATUS
B	12/05/2023	M.KH	M.KH	DR.M.M	ISSUED FOR INFORMATION	IFI

DRAWING TITLE

6TH OF OCTOBER MONORAIL
SERVICE WALKWAYS
ZONE (1008)
Z8-BR056

Project Code	Rubric	Initiator	Lot	Ref	Number	Revision
9 3	M 0 4 7 6	A C C	6 0 D E P	D W G	0 8 6 6 7	B

Tekla structures

approval is subject to approval of coordination package between multi-discipline

REVIEWED WITH COMMENT MONORAILS PROJECT

All holes are 22mm U.N.O Length & Area & Weight per piece						
Z8-BR055	L80*8	S235JR	1	3472.5	1.11	33.1
Mark	Profile	Grade	QTY	Length	Area	Weight

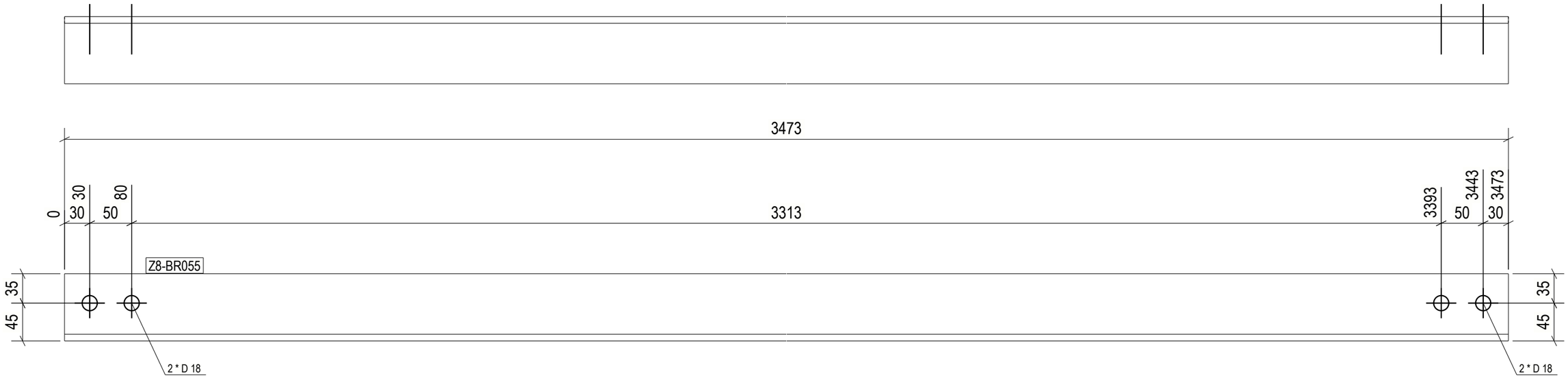

1 REQ'D AS DRAWN MK'D Z8-BR055

6 October Monorail Engineering Unit
Valid For Construction

GENERAL NOTES:

1. THE DIMENSIONS SHOWN ARE NOMINAL (IN MILLIMETERS), U.N.O.
2. WELD SIZESHALL BE AISC MINIMUM OF 6 mm UNLESS NOTED OTHERWISE.
3. ALL FIELD WELDS SHALL BE INSPECTED PER QUALITY ASSURANCE AND SPECIAL INSPECTIONS.

REFERENCE DRAWINGS

1	93M-BOA-NAT-LOT-04833
2	93M-BOA-NAT-LOT-09170
3	93M-BOA-NAT-LOT-01976
4	93M-BOA-NAT-LOT-20021
5	
6	
7	
8	
9	

6TH OF OCTOBER CITY RAIL TRANSIT MONORAIL

The Authority | Hill International Consultant | ORASCOM BOMBARDIER Main Contractor | INNOVA Structural Designer

KEY PLAN:

SCALE	SHOP DRAWING	DATE
AS SHOWN		12/05/2023

REV	DATE	DSN	CHK	APP	AMENDMENTS	STATUS
B	12/05/2023	M.KH	M.KH	DR.M.M	ISSUED FOR INFORMATION	IFI

DRAWING TITLE

6TH OF OCTOBER MONORAIL SERVICE WALKWAYS ZONE (1008)
Z8-BR055

Project Code	Rubric	Initiator	Lot	Ref	Number	Revision
93M	0476	ACC	60DEP	DWG	08668	B

Tekla structures

approval is subject to approval of coordination package between multi-discipline

REVIEWED WITH COMMENT
MONORAILS PROJECT

All holes are 22mm U.N.O Length & Area & Weight per piece

Mark	Profile	Grade	QTY	Length	Area	Weight
Z8-BR054	L80*8	S235JR	1	3474.9	1.11	33.2

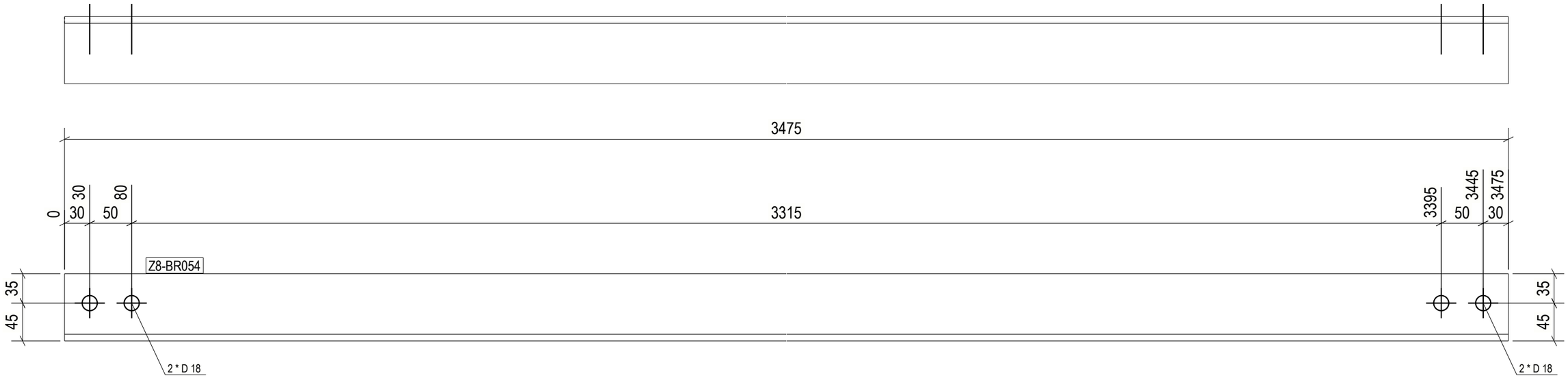

1 REQ'D AS DRAWN MK'D Z8-BR054

GENERAL NOTES:

1. THE DIMENSIONS SHOWN ARE NOMINAL (IN MILLIMETERS), U.N.O.
2. WELD SIZESHALL BE AISC MINIMUM OF 6 mm UNLESS NOTED OTHERWISE.
3. ALL FIELD WELDS SHALL BE INSPECTED PER QUALITY ASSURANCE AND SPECIAL INSPECTIONS.

REFERENCE DRAWINGS

1	93M-BOA-NAT-LOT-04833
2	93M-BOA-NAT-LOT-09170
3	93M-BOA-NAT-LOT-01976
4	93M-BOA-NAT-LOT-20021
5	
6	
7	
8	
9	

6TH OF OCTOBER CITY RAIL TRANSIT MONORAIL

The Authority | Consultant: Hill International | Main Contractor: Orascom Construction, Bombardier | Structural Designer: Innova

KEY PLAN:

6 October Monorail
Engineering Unit
Valid For Construction

SCALE	SHOP DRAWING	DATE
AS SHOWN		12/05/2023

REV	DATE	DRN	CHK	APP	AMENDMENT DESCRIPTION	STATUS
B	12/05/2023	M.KH	M.KH	DR.M.M	ISSUED FOR INFORMATION	IFI

DRAWING TITLE
6TH OF OCTOBER MONORAIL
SERVICE WALKWAYS
ZONE (1008)
Z8-BR054

Project Code	Rubric	Initiator	Lot	Ref	Number	Revision
93	M047	ACC60	DEP	DWG	08669	B

Tekla structures

approval is subject to approval of coordination package between multi-discipline

REVIEWED WITH COMMENT
MONORAILS PROJECT

All holes are 22mm U.N.O Length & Area & Weight per piece

Mark	Profile	Grade	QTY	Length	Area	Weight
Z8-BR053	L80*8	S235JR	2	3475.0	1.11	33.2

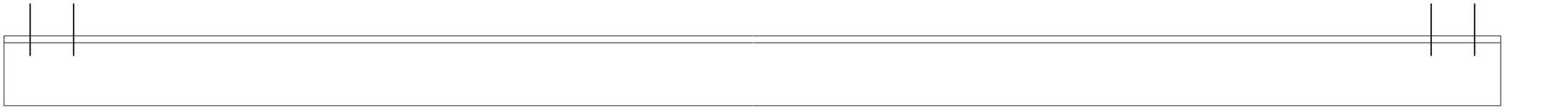

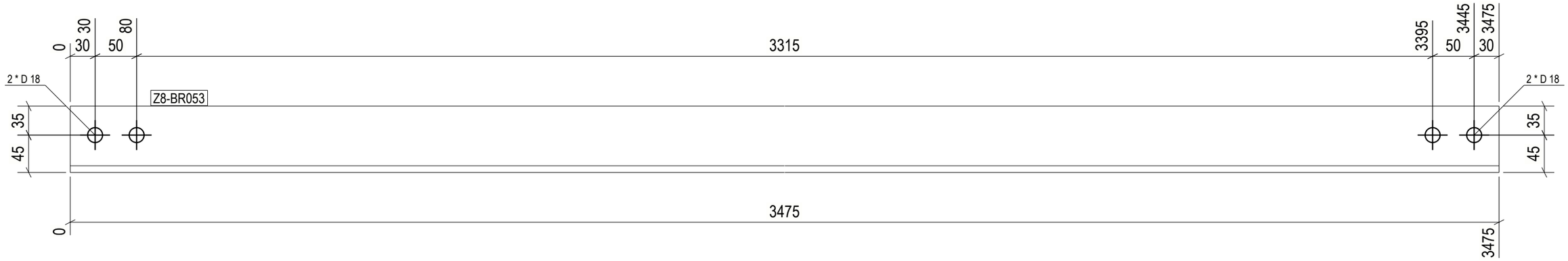

2 REQ'D AS DRAWN MK'D Z8-BR053

6 October Monorail
Engineering Unit
Valid For Construction

GENERAL NOTES:

1. THE DIMENSIONS SHOWN ARE NOMINAL (IN MILLIMETERS), U.N.O.
2. WELD SIZESHALL BE AISC MINIMUM OF 6 mm UNLESS NOTED OTHERWISE.
3. ALL FIELD WELDS SHALL BE INSPECTED PER QUALITY ASSURANCE AND SPECIAL INSPECTIONS.

REFERENCE DRAWINGS

1	93M-BOA-NAT-LOT-04833
2	93M-BOA-NAT-LOT-09170
3	93M-BOA-NAT-LOT-01976
4	93M-BOA-NAT-LOT-20021
5	
6	
7	
8	
9	

6TH OF OCTOBER CITY RAIL TRANSIT MONORAIL

The Authority | Consultant: Hill International | Main Contractor | Structural Designer

KEY PLAN:

SCALE: AS SHOWN | SHOP DRAWING | DATE: 12/05/2023

REV	DATE	DRN	CHK	APP	AMENDMENT	STATUS
B	12/05/2023	M.KH	M.KH	DR.M.M	ISSUED FOR INFORMATION	IFI

DRAWING TITLE

6TH OF OCTOBER MONORAIL
SERVICE WALKWAYS
ZONE (1008)
Z8-BR053

Project Code	Rubric	Initiator	Lot	Ref	Number	Revision
9 3	M 0 4 7 6	A C C	6 0 D E	P	D W G 0 8 6 7 0	B

Tekla structures

approval is subject to approval of coordination package between multi-discipline

REVIEWED WITH COMMENT
MONORAILS PROJECT

All holes are 22mm U.N.O Length & Area & Weight per piece						
Z8-BR052	L80*8	S235JR	1	3489.6	1.12	33.3
Mark	Profile	Grade	QTY	Length	Area	Weight

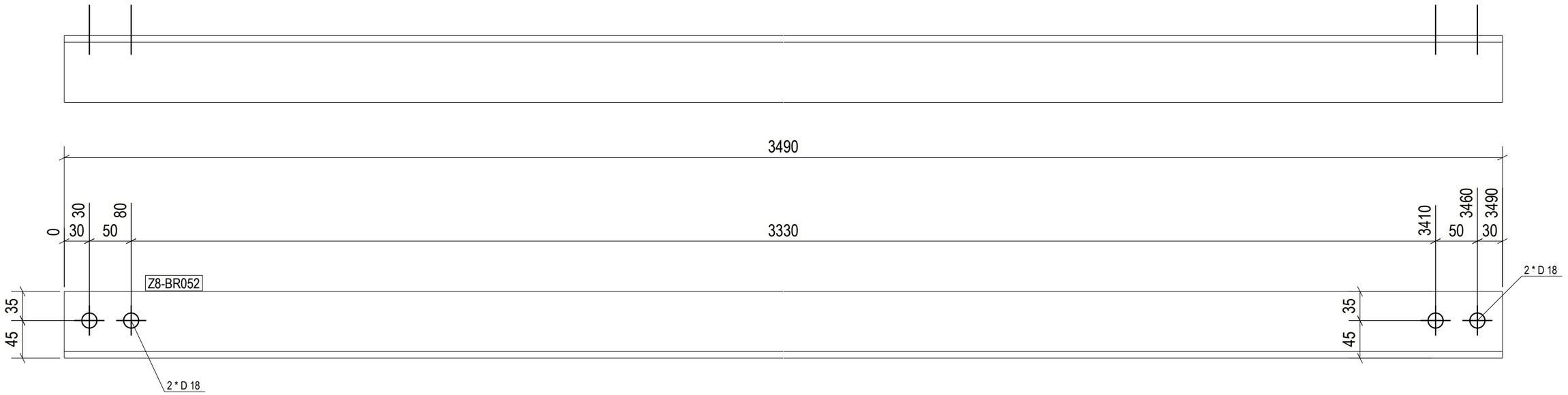

1 REQ'D AS DRAWN MK'D Z8-BR052

GENERAL NOTES:

1. THE DIMENSIONS SHOWN ARE NOMINAL (IN MILLIMETERS), U.N.O.
2. WELD SIZESHALL BE AISC MINIMUM OF 6 mm UNLESS NOTED OTHERWISE.
3. ALL FIELD WELDS SHALL BE INSPECTED PER QUALITY ASSURANCE AND SPECIAL INSPECTIONS.

REFERENCE DRAWINGS

1	93M-BOA-NAT-LOT-04833
2	93M-BOA-NAT-LOT-09170
3	93M-BOA-NAT-LOT-01976
4	93M-BOA-NAT-LOT-20021
5	
6	
7	
8	
9	

6TH OF OCTOBER CITY RAIL TRANSIT MONORAIL

The Authority | Hill International Consultant | Main Contractor | Structural Designer

KEY PLAN:

6 October Monorail Engineering Unit
Valid For Construction

SCALE	SHOP DRAWING	DATE
AS SHOWN		12/05/2023

REV	DATE	DRN	CHK	APP	AMENDMENTS	STATUS
B	12/05/2023	M.KH	M.KH	DR.M.M	ISSUED FOR INFORMATION	IFI

DRAWING TITLE

6TH OF OCTOBER MONORAIL
SERVICE WALKWAYS
ZONE (1008)
Z8-BR052

Project Code	Rubric	Initiator	Lot	Ref	Number	Revision
9 3	M 0 4 7 6	A C C	6 0 D E P	D W G	0 8 6 7 1	B

Tekla structures

approval is subject to approval of coordination package between multi-discipline

REVIEWED WITH COMMENT
MONORAILS PROJECT

All holes are 22mm U.N.O Length & Area & Weight per piece

Mark	Profile	Grade	QTY	Length	Area	Weight
Z8-BR051	L80*8	S235JR	1	3489.6	1.12	33.3

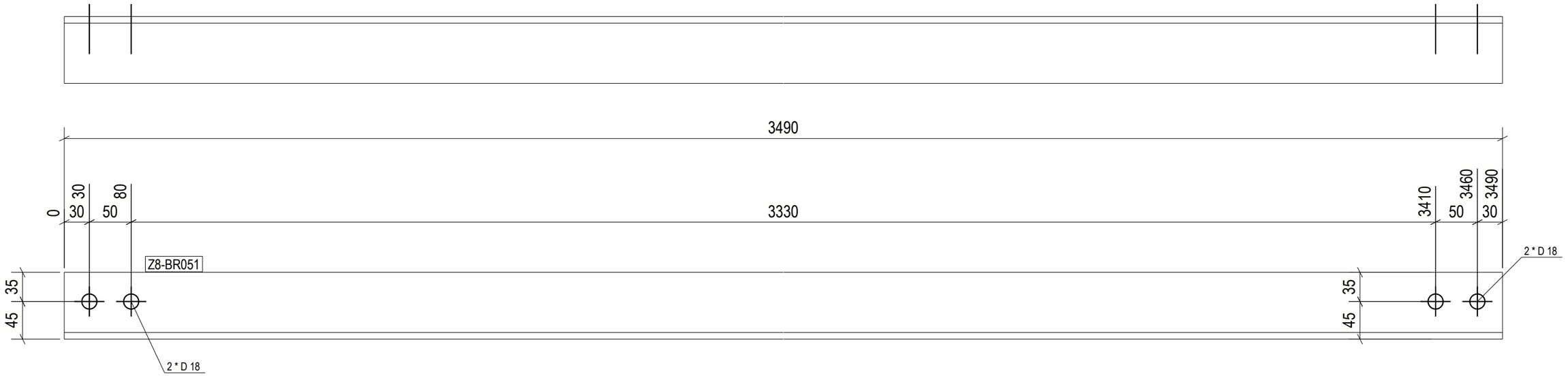

1 REQ'D AS DRAWN MK'D Z8-BR051

6 October Monorail
Engineering Unit
Valid For Construction

GENERAL NOTES:

1. THE DIMENSIONS SHOWN ARE NOMINAL (IN MILLIMETERS), U.N.O.
2. WELD SIZESHALL BE AISC MINIMUM OF 6 mm UNLESS NOTED OTHERWISE.
3. ALL FIELD WELDS SHALL BE INSPECTED PER QUALITY ASSURANCE AND SPECIAL INSPECTIONS.

REFERENCE DRAWINGS

1	93M-BOA-NAT-LOT-04833
2	93M-BOA-NAT-LOT-09170
3	93M-BOA-NAT-LOT-01976
4	93M-BOA-NAT-LOT-20021
5	
6	
7	
8	
9	

6TH OF OCTOBER CITY RAIL TRANSIT MONORAIL

The Authority | Hill International Consultant | Main Contractor | Structural Designer

KEY PLAN:

SCALE: AS SHOWN | SHOP DRAWING | DATE: 12/05/2023

REV	DATE	DRN	CHK	APP	AMENDMENT DESCRIPTION	STATUS
B	12/05/2023	M.KH	M.KH	DR.M.M	ISSUED FOR INFORMATION	IFI

DRAWING TITLE

6TH OF OCTOBER MONORAIL
SERVICE WALKWAYS
ZONE (1008)
Z8-BR051

Project Code	Rubric	Initiator	Lot	Ref	Number	Revision
9 3	M 0 4 7 6	A C C	6 0 D E P	D W G	0 8 6 7 2	B

Tekla structures

approval is subject to approval of coordination package between multi-discipline

REVIEWED WITH COMMENT
MONORAILS PROJECT

All holes are 22mm U.N.O Length & Area & Weight per piece

Mark	Profile	Grade	QTY	Length	Area	Weight
Z8-BR050	L80*8	S235JR	1	2618.5	0.84	25.0

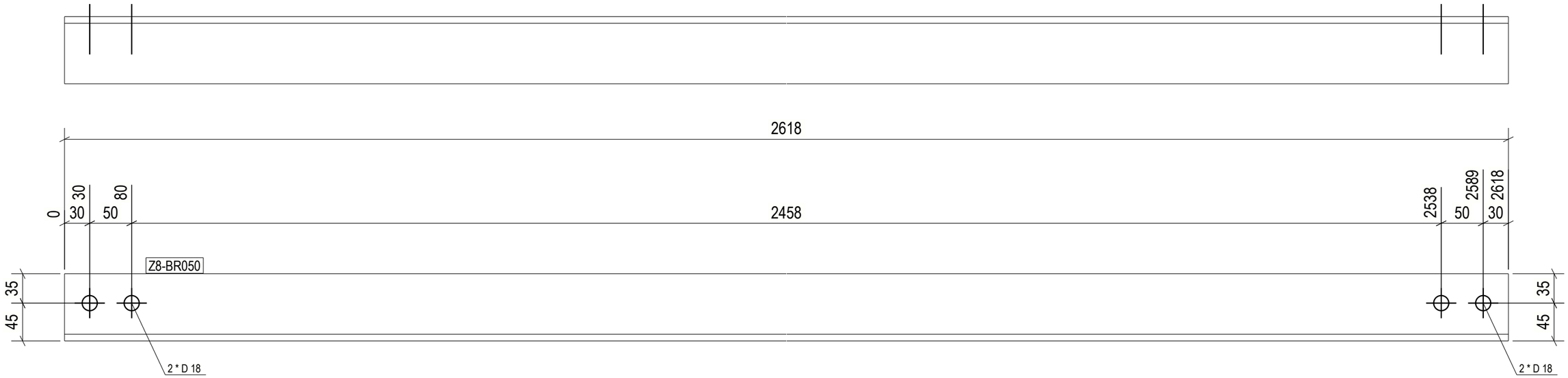

1 REQ'D AS DRAWN MK'D Z8-BR050

6 October Monorail
Engineering Unit
Valid For Construction

GENERAL NOTES:

1. THE DIMENSIONS SHOWN ARE NOMINAL (IN MILLIMETERS), U.N.O.
2. WELD SIZESHALL BE AISC MINIMUM OF 6 mm UNLESS NOTED OTHERWISE.
3. ALL FIELD WELDS SHALL BE INSPECTED PER QUALITY ASSURANCE AND SPECIAL INSPECTIONS.

REFERENCE DRAWINGS

1	93M-BOA-NAT-LOT-04833
2	93M-BOA-NAT-LOT-09170
3	93M-BOA-NAT-LOT-01976
4	93M-BOA-NAT-LOT-20021
5	
6	
7	
8	
9	

6TH OF OCTOBER CITY RAIL TRANSIT MONORAIL

The Authority | Hill International Consultant | Main Contractor | Structural Designer

KEY PLAN:

SCALE: AS SHOWN | SHOP DRAWING | DATE: 12/05/2023

REV	DATE	DRN	CHK	APP	AMENDMENTS	STATUS
B	12/05/2023	M.KH	M.KH	DR.M.M	ISSUED FOR INFORMATION	IFI

DRAWING TITLE

6TH OF OCTOBER MONORAIL
SERVICE WALKWAYS
ZONE (1008)
Z8-BR050

Project Code	Rubric	Initiator	Lot	Ref	Number	Revision
9 3	M 0 4 7 6	A C C	6 0 D E P	D W G	0 8 6 7 3	B

Tekla structures

approval is subject to approval of coordination package between multi-discipline

REVIEWED WITH COMMENT
MONORAILS PROJECT

All holes are 22mm U.N.O Length & Area & Weight per piece

Mark	Profile	Grade	QTY	Length	Area	Weight
Z8-BR049	L80*8	S235JR	1	2622.1	0.84	25.0

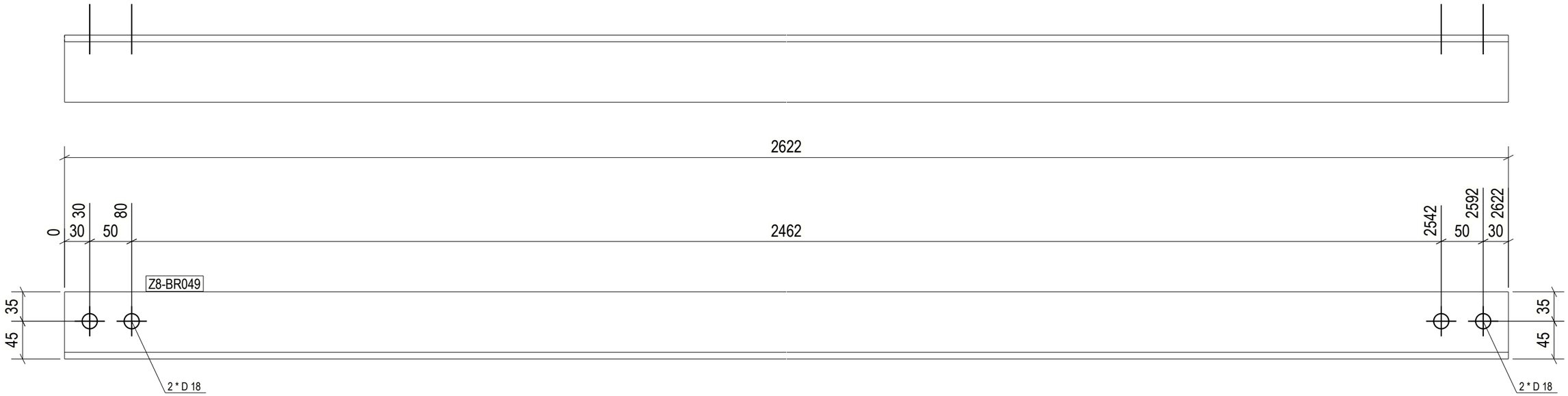

1 REQ'D AS DRAWN MK'D Z8-BR049

GENERAL NOTES:

1. THE DIMENSIONS SHOWN ARE NOMINAL (IN MILLIMETERS), U.N.O.
2. WELD SIZESHALL BE AISC MINIMUM OF 6 mm UNLESS NOTED OTHERWISE.
3. ALL FIELD WELDS SHALL BE INSPECTED PER QUALITY ASSURANCE AND SPECIAL INSPECTIONS.

REFERENCE DRAWINGS

1	93M-BOA-NAT-LOT-04833
2	93M-BOA-NAT-LOT-09170
3	93M-BOA-NAT-LOT-01976
4	93M-BOA-NAT-LOT-20021
5	
6	
7	
8	
9	

6TH OF OCTOBER CITY RAIL TRANSIT MONORAIL

The Authority | Hill International Consultant | Main Contractor | Structural Designer

KEY PLAN:

6 October Monorail Engineering Unit Valid For Construction

SCALE	SHOP DRAWING	DATE
AS SHOWN		12/05/2023

REV	DATE	DSN	CHK	APP	AMENDMENTS DESCRIPTION	STATUS
B	12/05/2023	M.KH	M.KH	DR.M.M	ISSUED FOR INFORMATION	IFI

DRAWING TITLE

6TH OF OCTOBER MONORAIL
SERVICE WALKWAYS
ZONE (1008)
Z8-BR049

Project Code	Rubric	Initiator	Lot	Ref	Number	Revision
9 3 M	0 4 7 6	A C C	6 0 D E P	D W G	0 8 6 7 4	B

Tekla structures

approval is subject to approval of coordination package between multi-discipline

REVIEWED WITH COMMENT
MONORAILS PROJECT

All holes are 22mm U.N.O Length & Area & Weight per piece						
Z8-BR048	L80*8	S235JR	1	3428.1	1.10	32.7
Mark	Profile	Grade	QTY	Length	Area	Weight

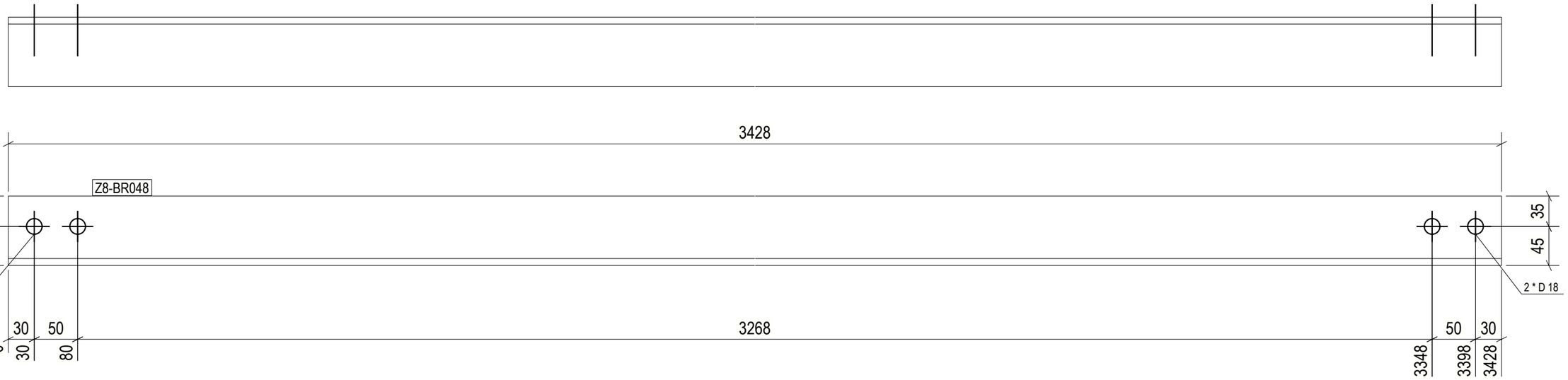

1 REQ'D AS DRAWN MK'D Z8-BR048

GENERAL NOTES:

1. THE DIMENSIONS SHOWN ARE NOMINAL (IN MILLIMETERS), U.N.O.
2. WELD SIZESHALL BE AISC MINIMUM OF 6 mm UNLESS NOTED OTHERWISE.
3. ALL FIELD WELDS SHALL BE INSPECTED PER QUALITY ASSURANCE AND SPECIAL INSPECTIONS.

REFERENCE DRAWINGS

1	93M-BOA-NAT-LOT-04833
2	93M-BOA-NAT-LOT-09170
3	93M-BOA-NAT-LOT-01976
4	93M-BOA-NAT-LOT-20021
5	
6	
7	
8	
9	

6TH OF OCTOBER CITY RAIL TRANSIT MONORAIL

The Authority | Consultant: Hill International | Main Contractor: Orascom Construction, Bombardier | Structural Designer: Innova

KEY PLAN:

6 October Monorail
Engineering Unit
Valid For Construction

SCALE	SHOP DRAWING	DATE
AS SHOWN		12/05/2023

REV	DATE	DRN	CHK	APP	AMENDMENT DESCRIPTION	STATUS
B	12/05/2023	M.KH	M.KH	DR.M.M	ISSUED FOR INFORMATION	IFI

DRAWING TITLE
6TH OF OCTOBER MONORAIL
SERVICE WALKWAYS
ZONE (1008)
Z8-BR048

Project Code	Rubric	Initiator	Lot	Ref	Number	Revision
9 3	M 0 4 7 6	A C C	6 0 D E	P	D W G	0 8 6 7 5	B

Tekla structures

approval is subject to approval of coordination package between multi-discipline

REVIEWED WITH COMMENT MONORAILS PROJECT

All holes are 22mm U.N.O Length & Area & Weight per piece						
Z8-BR047	L70*7	S235JR	1	1424.5	0.40	10.4
Mark	Profile	Grade	QTY	Length	Area	Weight

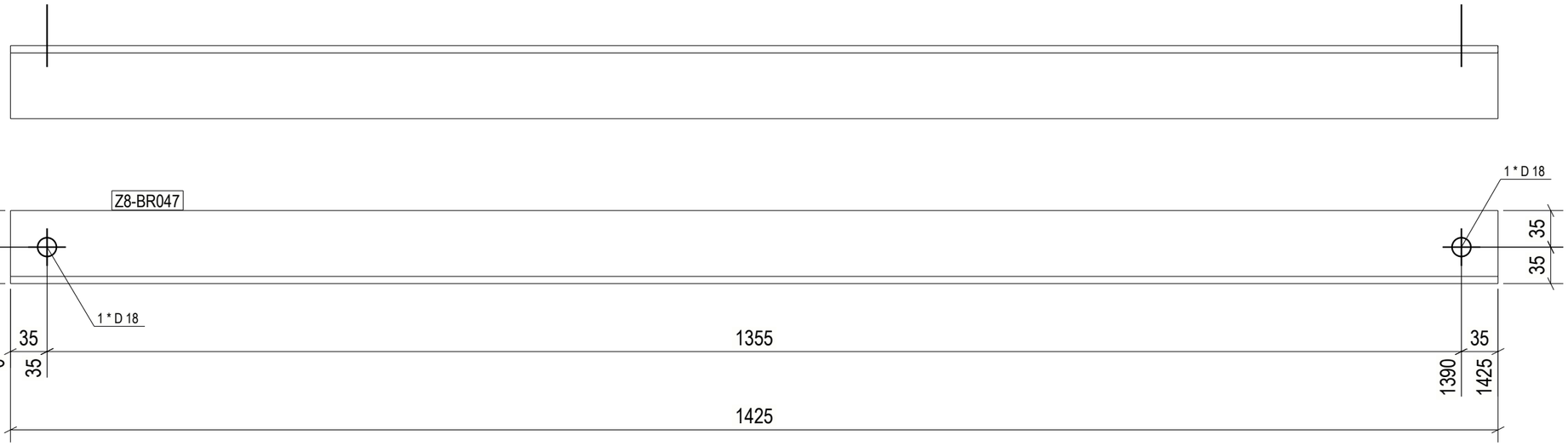

1 REQ'D AS DRAWN MK'D Z8-BR047

6 October Monorail Engineering Unit
Valid For Construction

GENERAL NOTES:

1. THE DIMENSIONS SHOWN ARE NOMINAL (IN MILLIMETERS), U.N.O.
2. WELD SIZESHALL BE AISC MINIMUM OF 6 mm UNLESS NOTED OTHERWISE.
3. ALL FIELD WELDS SHALL BE INSPECTED PER QUALITY ASSURANCE AND SPECIAL INSPECTIONS.

REFERENCE DRAWINGS

1	93M-BOA-NAT-LOT-04833
2	93M-BOA-NAT-LOT-09170
3	93M-BOA-NAT-LOT-01976
4	93M-BOA-NAT-LOT-20021
5	
6	
7	
8	
9	

6TH OF OCTOBER CITY RAIL TRANSIT MONORAIL

The Authority | Hill International Consultant | ORASCOM BOMBARDIER Main Contractor | INNOVA Structural Designer

KEY PLAN:

SCALE	SHOP DRAWING	DATE
AS SHOWN		12/05/2023

REV	DATE	DSG	CHK	APP	AMENDMENTS	STATUS
B	12/05/2023	M.KH	M.KH	DR.M.M	ISSUED FOR INFORMATION	IFI

DRAWING TITLE

6TH OF OCTOBER MONORAIL SERVICE WALKWAYS ZONE (1008)
Z8-BR047

Project Code	Rubric	Initiator	Lot	Ref	Number	Revision
93M	0476	ACC	60DEP	DWG	08676	B

Tekla structures

approval is subject to approval of coordination package between multi-discipline

REVIEWED WITH COMMENT MONORAILS PROJECT

All holes are 22mm U.N.O Length & Area & Weight per piece						
Z8-BR046	L70*7	S235JR	1	1386.8	0.39	10.1
Mark	Profile	Grade	QTY	Length	Area	Weight

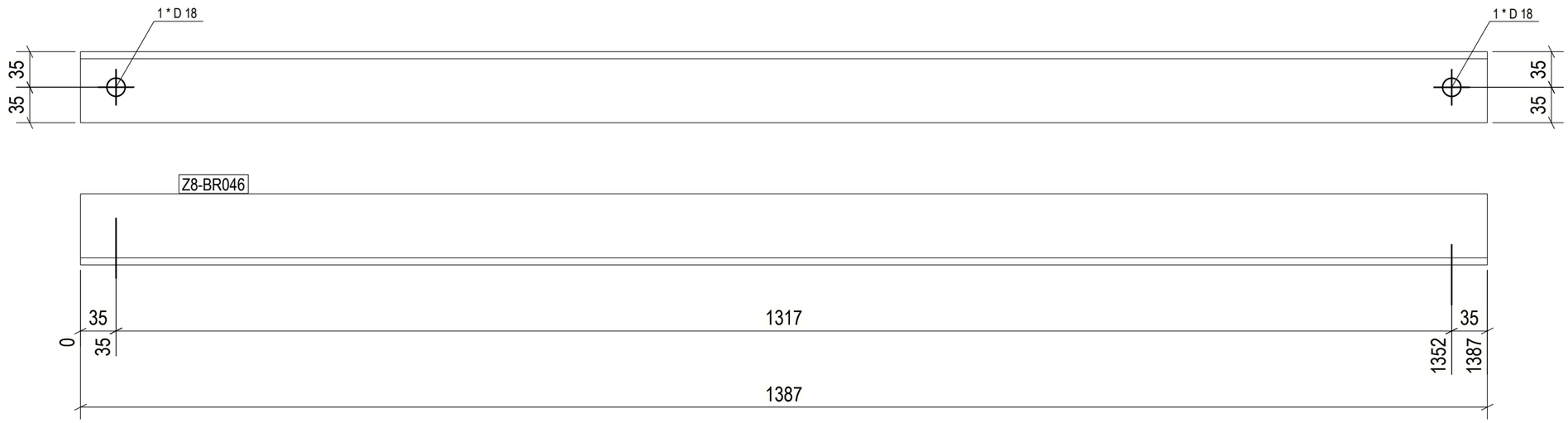

1 REQ'D AS DRAWN MK'D Z8-BR046

6 October Monorail Engineering Unit
Valid For Construction

GENERAL NOTES:

1. THE DIMENSIONS SHOWN ARE NOMINAL (IN MILLIMETERS), U.N.O.
2. WELD SIZESHALL BE AISC MINIMUM OF 6 mm UNLESS NOTED OTHERWISE.
3. ALL FIELD WELDS SHALL BE INSPECTED PER QUALITY ASSURANCE AND SPECIAL INSPECTIONS.

REFERENCE DRAWINGS

1	93M-BOA-NAT-LOT-04833
2	93M-BOA-NAT-LOT-09170
3	93M-BOA-NAT-LOT-01976
4	93M-BOA-NAT-LOT-20021
5	
6	
7	
8	
9	

6TH OF OCTOBER CITY RAIL TRANSIT MONORAIL

The Authority | Hill International Consultant | ORASCOM BOMBARDIER Main Contractor | INNOVA Structural Designer

KEY PLAN:

SCALE	SHOP DRAWING	DATE
AS SHOWN		12/05/2023

REV	DATE	DSG	CHK	APP	AMENDMENTS	STATUS
B	12/05/2023	M.KH	M.KH	DR.M.M	ISSUED FOR INFORMATION	IFI

DRAWING TITLE

6TH OF OCTOBER MONORAIL SERVICE WALKWAYS ZONE (1008)
Z8-BR046

Project Code	Rubric	Initiator	Lot	Ref	Number	Revision
93M	0476	ACC	60DEP	DWG	08677	B

Tekla structures

approval is subject to approval of coordination package between multi-discipline

REVIEWED WITH COMMENT MONORAILS PROJECT

All holes are 22mm U.N.O Length & Area & Weight per piece						
Z8-BR045	L70*7	S235JR	1	1365.6	0.38	10.0
Mark	Profile	Grade	QTY	Length	Area	Weight

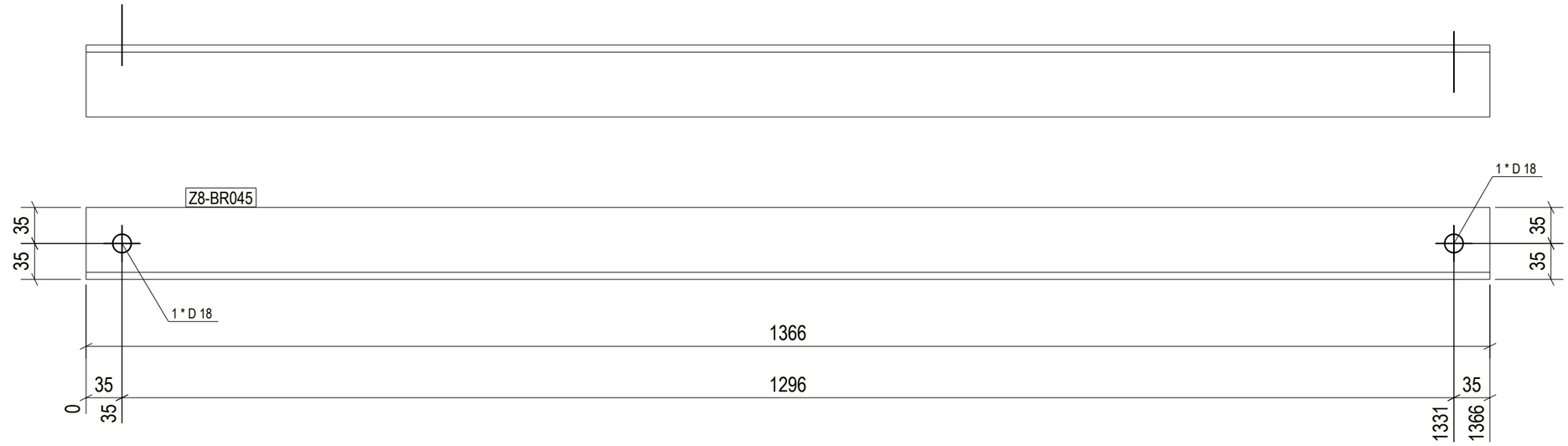

1 REQ'D AS DRAWN MK'D Z8-BR045

6 October Monorail Engineering Unit
Valid For Construction

GENERAL NOTES:

1. THE DIMENSIONS SHOWN ARE NOMINAL (IN MILLIMETERS), U.N.O.
2. WELD SIZESHALL BE AISC MINIMUM OF 6 mm UNLESS NOTED OTHERWISE.
3. ALL FIELD WELDS SHALL BE INSPECTED PER QUALITY ASSURANCE AND SPECIAL INSPECTIONS.

REFERENCE DRAWINGS

1	93M-BOA-NAT-LOT-04833
2	93M-BOA-NAT-LOT-09170
3	93M-BOA-NAT-LOT-01976
4	93M-BOA-NAT-LOT-20021
5	
6	
7	
8	
9	

6TH OF OCTOBER CITY RAIL TRANSIT MONORAIL

The Authority | Hill International Consultant | ORASCOM BOMBARDIER Main Contractor | INNOVA Structural Designer

KEY PLAN:

SCALE	SHOP DRAWING	DATE
AS SHOWN		12/05/2023

REV	DATE	DSN	CHK	APP	AMENDMENTS	STATUS
B	12/05/2023	M.KH	M.KH	DR.M.M	ISSUED FOR INFORMATION	IFI

DRAWING TITLE

6TH OF OCTOBER MONORAIL SERVICE WALKWAYS ZONE (1008)
Z8-BR045

Project Code	Rubric	Initiator	Lot	Ref	Number	Revision
93M	0476	ACC	60DEP	DWG	08678	B

Tekla structures

approval is subject to approval of coordination package between multi-discipline

REVIEWED WITH COMMENT
MONORAILS PROJECT

All holes are 22mm U.N.O Length & Area & Weight per piece

Mark	Profile	Grade	QTY	Length	Area	Weight
Z8-BR044	L70*7	S235JR	1	1414.5	0.40	10.3

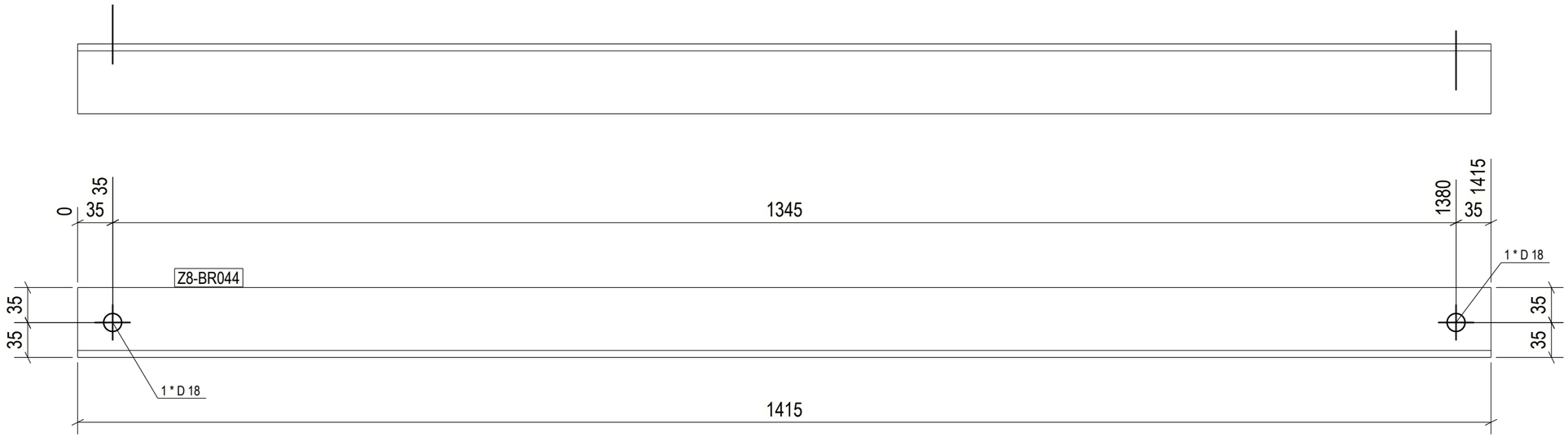

1 REQ'D AS DRAWN MK'D Z8-BR044

GENERAL NOTES:

1. THE DIMENSIONS SHOWN ARE NOMINAL (IN MILLIMETERS), U.N.O.
2. WELD SIZESHALL BE AISC MINIMUM OF 6 mm UNLESS NOTED OTHERWISE.
3. ALL FIELD WELDS SHALL BE INSPECTED PER QUALITY ASSURANCE AND SPECIAL INSPECTIONS.

REFERENCE DRAWINGS

1	93M-BOA-NAT-LOT-04833
2	93M-BOA-NAT-LOT-09170
3	93M-BOA-NAT-LOT-01976
4	93M-BOA-NAT-LOT-20021
5	
6	
7	
8	
9	

6TH OF OCTOBER CITY RAIL TRANSIT MONORAIL

The Authority | Consultant: Hill International | Main Contractor | Structural Designer

KEY PLAN:

6 October Monorail
Engineering Unit
Valid For Construction

REV	DATE	DRN	CHK	APP	AMENDMENTS	STATUS
B	12/05/2023	M.KH	M.KH	DR.M.M	ISSUED FOR INFORMATION	IFI

SCALE: AS SHOWN | SHOP DRAWING | DATE: 12/05/2023

DRAWING TITLE
6TH OF OCTOBER MONORAIL
SERVICE WALKWAYS
ZONE (1008)
Z8-BR044

Project Code	Rubric	Initiator	Lot	Ref	Number	Revision
93	M04	76	ACC60	DEP	DWG	08679	B

Tekla structures

approval is subject to approval of coordination package between multi-discipline

REVIEWED WITH COMMENT
MONORAILS PROJECT

All holes are 22mm U.N.O Length & Area & Weight per piece						
Z8-BR043	L70*7	S235JR	1	1209.6	0.34	8.8
Mark	Profile	Grade	QTY	Length	Area	Weight

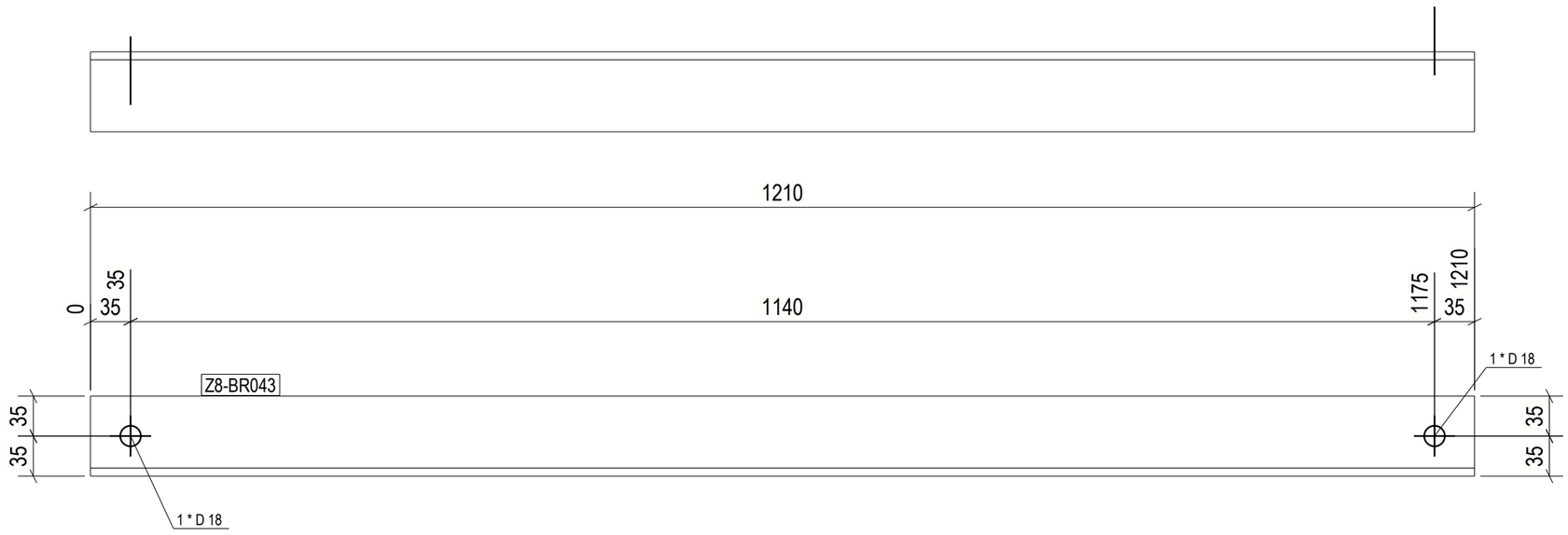

1 REQ'D AS DRAWN MK'D Z8-BR043

GENERAL NOTES:

1. THE DIMENSIONS SHOWN ARE NOMINAL (IN MILLIMETERS), U.N.O.
2. WELD SIZESHALL BE AISC MINIMUM OF 6 mm UNLESS NOTED OTHERWISE.
3. ALL FIELD WELDS SHALL BE INSPECTED PER QUALITY ASSURANCE AND SPECIAL INSPECTIONS.

REFERENCE DRAWINGS

1	93M-BOA-NAT-LOT-04833
2	93M-BOA-NAT-LOT-09170
3	93M-BOA-NAT-LOT-01976
4	93M-BOA-NAT-LOT-20021
5	
6	
7	
8	
9	

6TH OF OCTOBER CITY RAIL TRANSIT MONORAIL

The Authority | Consultant: Hill International | Main Contractor: ORASCOM CONSTRUCTION / BOMBARDIER | Structural Designer: INNOVA TRANSPORTATION

KEY PLAN:

6 October Monorail
Engineering Unit
Valid For Construction

REV	DATE	DRN	CHK	APP	AMENDMENTS	STATUS
B	12/05/2023	M.KH	M.KH	DR.M.M	ISSUED FOR INFORMATION	IFI

SCALE: AS SHOWN | SHOP DRAWING | DATE: 12/05/2023

DRAWING TITLE
6TH OF OCTOBER MONORAIL
SERVICE WALKWAYS
ZONE (1008)
Z8-BR043

Project Code	Rubric	Initiator	Lot	Ref	Number	Revision
9 3	M 0 4 7 6	A C C	6 0 D E P	D W G	0 8 6 8 0	B

Tekla structures

approval is subject to approval of coordination package between multi-discipline

REVIEWED WITH COMMENT MONORAILS PROJECT

All holes are 22mm U.N.O Length & Area & Weight per piece						
Z8-BR042	L70*7	S235JR	1	1599.8	0.45	11.7
Mark	Profile	Grade	QTY	Length	Area	Weight

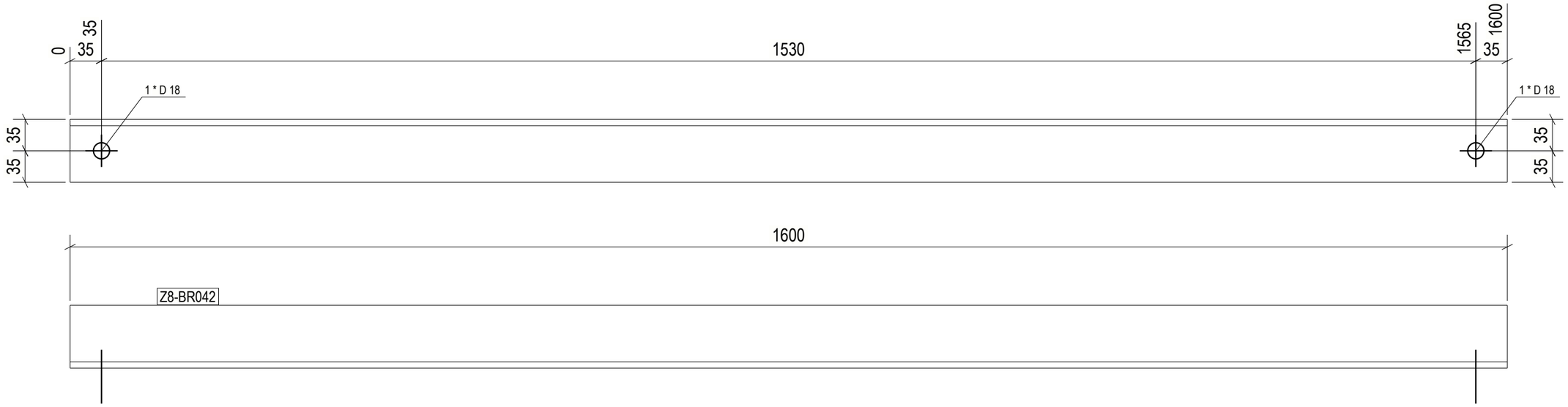

1 REQ'D AS DRAWN MK'D Z8-BR042

6 October Monorail Engineering Unit
Valid For Construction

GENERAL NOTES:

1. THE DIMENSIONS SHOWN ARE NOMINAL (IN MILLIMETERS), U.N.O.
2. WELD SIZESHALL BE AISC MINIMUM OF 6 mm UNLESS NOTED OTHERWISE.
3. ALL FIELD WELDS SHALL BE INSPECTED PER QUALITY ASSURANCE AND SPECIAL INSPECTIONS.

REFERENCE DRAWINGS

1	93M-BOA-NAT-LOT-04833
2	93M-BOA-NAT-LOT-09170
3	93M-BOA-NAT-LOT-01976
4	93M-BOA-NAT-LOT-20021
5	
6	
7	
8	
9	

6TH OF OCTOBER CITY RAIL TRANSIT MONORAIL

The Authority | Hill International Consultant | ORASCOM BOMBARDIER Main Contractor | INNOVA Structural Designer

KEY PLAN:

SCALE	SHOP DRAWING	DATE
AS SHOWN		12/05/2023

REV	DATE	DSG	CHK	APP	AMENDMENTS	STATUS
B	12/05/2023	M.KH	M.KH	DR.M.M	ISSUED FOR INFORMATION	IFI

DRAWING TITLE

6TH OF OCTOBER MONORAIL SERVICE WALKWAYS ZONE (1008)
Z8-BR042

Project Code	Rubric	Initiator	Lot	Ref	Number	Revision
93M	0476	ACC	60DEP	DWG	08681	B

Tekla structures

approval is subject to approval of coordination package between multi-discipline

REVIEWED WITH COMMENT
MONORAILS PROJECT

All holes are 22mm U.N.O Length & Area & Weight per piece

Mark	Profile	Grade	QTY	Length	Area	Weight
Z8-BR041	L70X70X7	S235JR	1	979.3	0.27	7.2

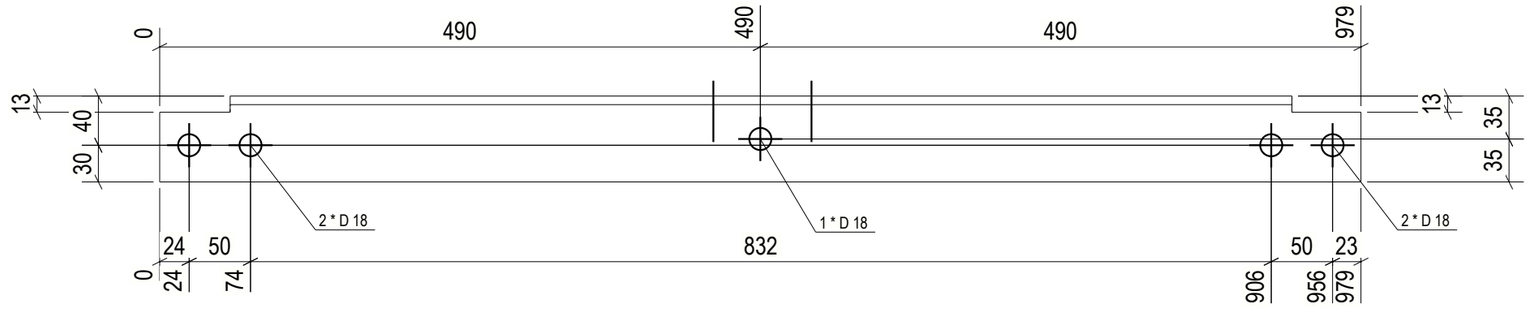

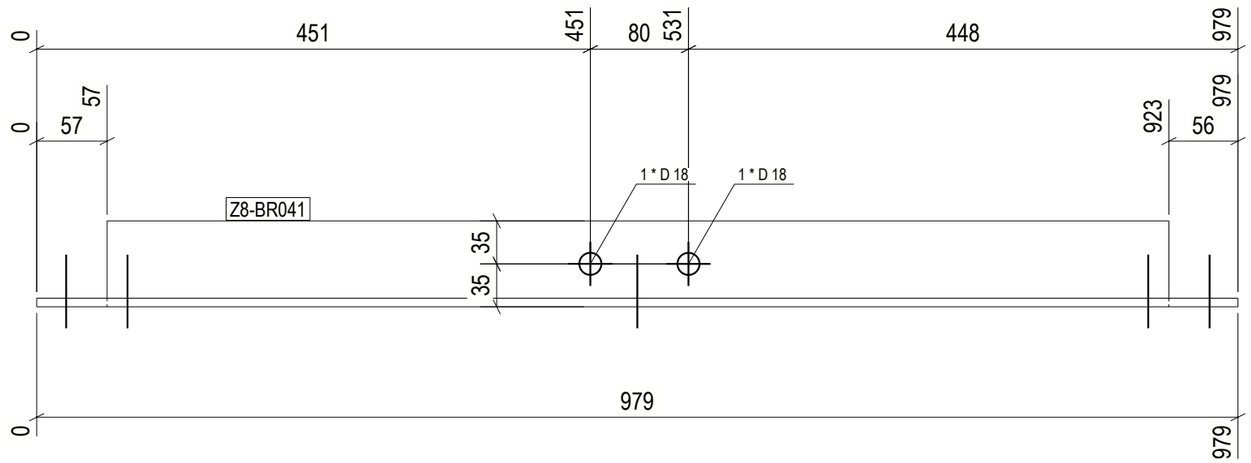

1 REQ'D AS DRAWN MK'D Z8-BR041

6 October Monorail
Engineering Unit
Valid For Construction

GENERAL NOTES:

1. THE DIMENSIONS SHOWN ARE NOMINAL (IN MILLIMETERS), U.N.O.
2. WELD SIZESHALL BE AISC MINIMUM OF 6 mm UNLESS NOTED OTHERWISE.
3. ALL FIELD WELDS SHALL BE INSPECTED PER QUALITY ASSURANCE AND SPECIAL INSPECTIONS.

REFERENCE DRAWINGS

1	93M-BOA-NAT-LOT-04833
2	93M-BOA-NAT-LOT-09170
3	93M-BOA-NAT-LOT-01976
4	93M-BOA-NAT-LOT-20021
5	
6	
7	
8	
9	

6TH OF OCTOBER CITY RAIL TRANSIT MONORAIL

The Authority | Hill International Consultant | Main Contractor | Structural Designer

KEY PLAN:

SCALE: AS SHOWN | SHOP DRAWING | DATE: 12/05/2023

REV	DATE	DSN	CHK	APP	AMENDMENT DESCRIPTION	STATUS
B	12/05/2023	M.KH	M.KH	DR.M.M	ISSUED FOR INFORMATION	IFI
1	DATE	DSN	CHK	APP	AMENDMENT DESCRIPTION	STATUS

DRAWING TITLE

6TH OF OCTOBER MONORAIL
SERVICE WALKWAYS
ZONE (1008)
Z8-BR041

Project Code	Rubric	Initiator	Lot	Ref	Number	Revision
9 3 M	0 4 7 6	A C C	6 0 D E P	D W G	0 8 6 8 2	B

Tekla structures

approval is subject to approval of coordination package between multi-discipline

REVIEWED WITH COMMENT
MONORAILS PROJECT

All holes are 22mm U.N.O Length & Area & Weight per piece

Mark	Profile	Grade	QTY	Length	Area	Weight
Z8-BR040	L70X70X7	S235JR	1	979.3	0.27	7.2

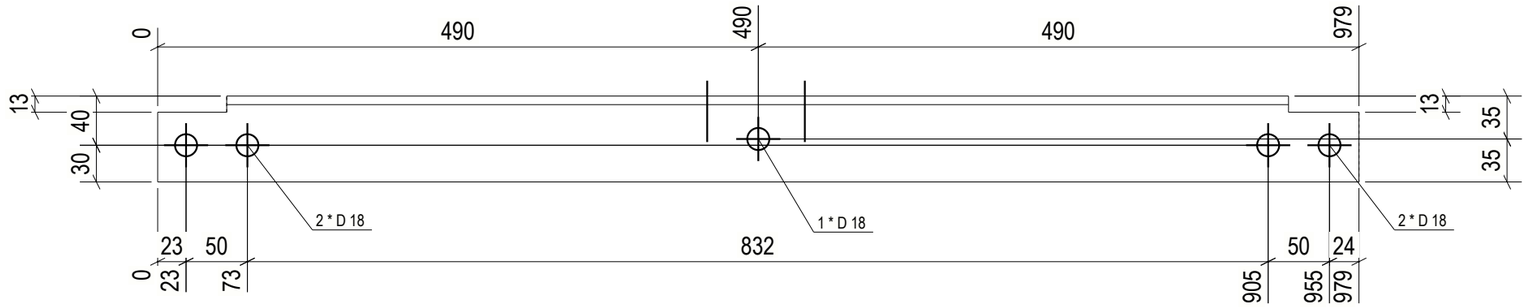

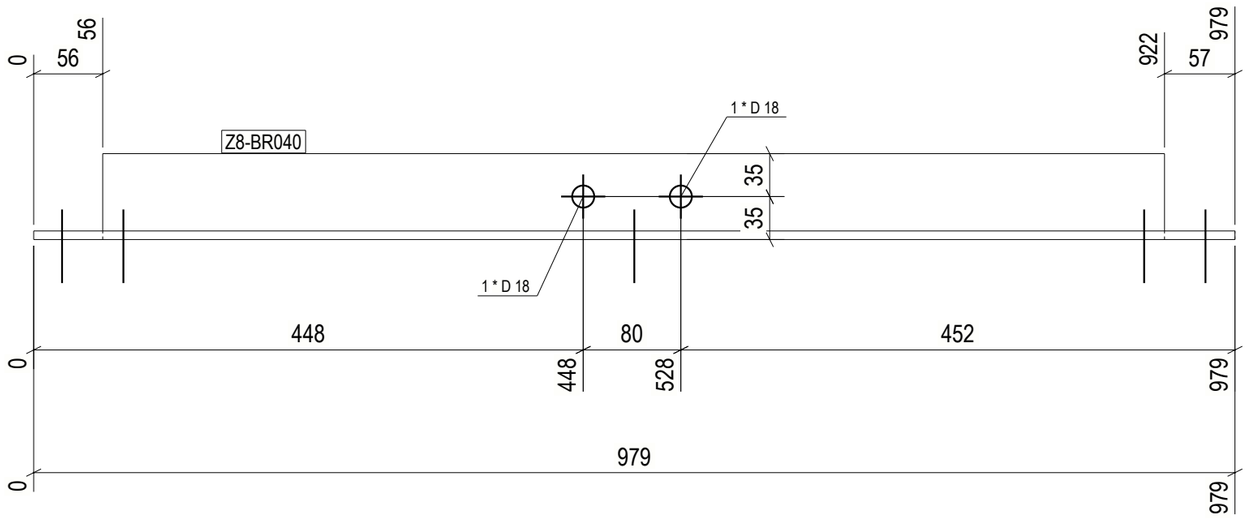

1 REQ'D AS DRAWN MK'D Z8-BR040

GENERAL NOTES:

1. THE DIMENSIONS SHOWN ARE NOMINAL (IN MILLIMETERS), U.N.O.
2. WELD SIZESHALL BE AISC MINIMUM OF 6 mm UNLESS NOTED OTHERWISE.
3. ALL FIELD WELDS SHALL BE INSPECTED PER QUALITY ASSURANCE AND SPECIAL INSPECTIONS.

REFERENCE DRAWINGS

1	93M-BOA-NAT-LOT-04833
2	93M-BOA-NAT-LOT-09170
3	93M-BOA-NAT-LOT-01976
4	93M-BOA-NAT-LOT-20021
5	
6	
7	
8	
9	

6TH OF OCTOBER CITY RAIL TRANSIT MONORAIL

The Authority | Consultant: Hill International | Main Contractor: ORASCOM CONSTRUCTION / BOMBARDIER | Structural Designer: INNOVA TRANSPORTATION

KEY PLAN:

6 October Monorail
Engineering Unit
Valid For Construction

SCALE	SHOP DRAWING	DATE
AS SHOWN		12/05/2023

REV	DATE	DSN	CHK	APP	AMENDMENT DESCRIPTION	STATUS
B	12/05/2023	M.KH	M.KH	DR.M.M	ISSUED FOR INFORMATION	IFI

DRAWING TITLE

6TH OF OCTOBER MONORAIL
SERVICE WALKWAYS
ZONE (1008)
Z8-BR040

Project Code	Rubric	Initiator	Lot	Ref	Number	Revision
93	M047	6ACC	60DE	PDWG	0866	B

Tekla structures

approval is subject to approval of coordination package between multi-discipline

REVIEWED WITH COMMENT
MONORAILS PROJECT

All holes are 22mm U.N.O Length & Area & Weight per piece						
Z8-BR039	L70X70X7	S235JR	1	979.3	0.27	7.2
Mark	Profile	Grade	QTY	Length	Area	Weight

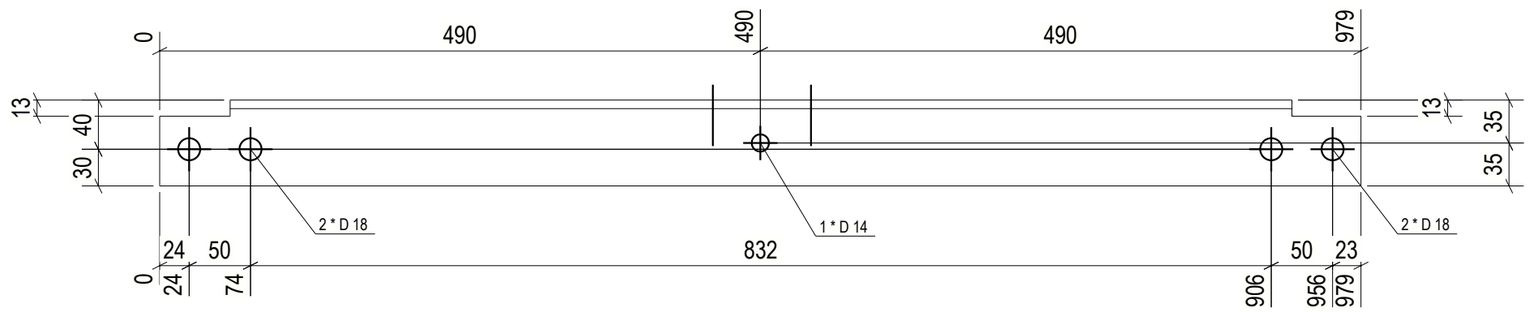

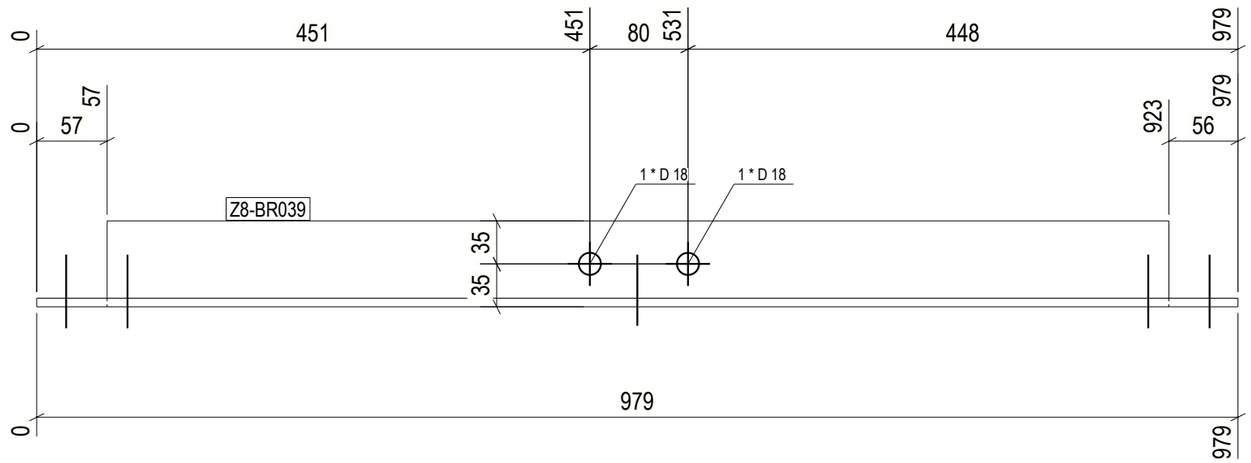

1 REQ'D AS DRAWN MK'D Z8-BR039

6 October Monorail
Engineering Unit
Valid For Construction

GENERAL NOTES:

1. THE DIMENSIONS SHOWN ARE NOMINAL (IN MILLIMETERS), U.N.O.
2. WELD SIZESHALL BE AISC MINIMUM OF 6 mm UNLESS NOTED OTHERWISE.
3. ALL FIELD WELDS SHALL BE INSPECTED PER QUALITY ASSURANCE AND SPECIAL INSPECTIONS.

REFERENCE DRAWINGS

1	93M-BOA-NAT-LOT-04833
2	93M-BOA-NAT-LOT-09170
3	93M-BOA-NAT-LOT-01976
4	93M-BOA-NAT-LOT-20021
5	
6	
7	
8	
9	

6TH OF OCTOBER CITY RAIL TRANSIT MONORAIL

The Authority | Hill International Consultant | Main Contractor | Structural Designer

KEY PLAN:

SCALE: AS SHOWN | SHOP DRAWING | DATE: 12/05/2023

REV	DATE	DSN	CHK	APP	AMENDMENT DESCRIPTION	STATUS
B	12/05/2023	M.KH	M.KH	DR.M.M	ISSUED FOR INFORMATION	IFI
A	17/04/2023	M.KH	M.KH	DR.M.M	ISSUED FOR INFORMATION	IFI

DRAWING TITLE

6TH OF OCTOBER MONORAIL
SERVICE WALKWAYS
ZONE (1008)
Z8-BR039

Project Code	Rubric	Initiator	Lot	Ref	Number	Revision
9 3	M 0 4 7 6	A C C	6 0 D E	P D W	G 0 8 6 8 4	B

Tekla structures

approval is subject to approval of coordination package between multi-discipline

REVIEWED WITH COMMENT
MONORAILS PROJECT

All holes are 22mm U.N.O Length & Area & Weight per piece

Mark	Profile	Grade	QTY	Length	Area	Weight
Z8-BR038	L70X70X7	S235JR	1	979.3	0.27	7.2

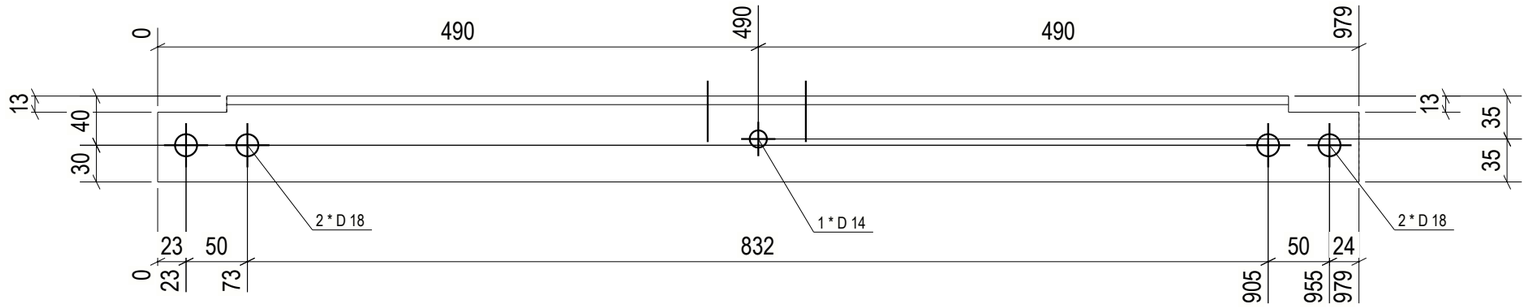

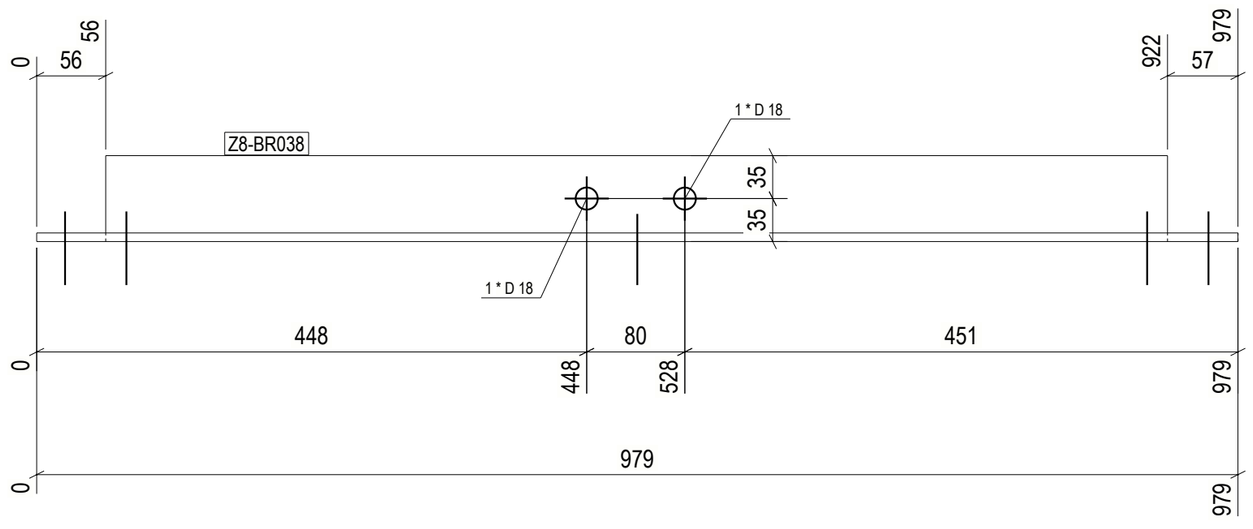

1 REQ'D AS DRAWN MK'D Z8-BR038

Tekla structures

GENERAL NOTES:

1. THE DIMENSIONS SHOWN ARE NOMINAL (IN MILLIMETERS), U.N.O.
2. WELD SIZESHALL BE AISC MINIMUM OF 6 mm UNLESS NOTED OTHERWISE.
3. ALL FIELD WELDS SHALL BE INSPECTED PER QUALITY ASSURANCE AND SPECIAL INSPECTIONS.

REFERENCE DRAWINGS

1	93M-BOA-NAT-LOT-04833
2	93M-BOA-NAT-LOT-09170
3	93M-BOA-NAT-LOT-01976
4	93M-BOA-NAT-LOT-20021
5	
6	
7	
8	
9	

6TH OF OCTOBER CITY RAIL TRANSIT MONORAIL

The Authority | Consultant: Hill International | Main Contractor | Structural Designer

KEY PLAN:

6 October Monorail
Engineering Unit
Valid For Construction

REV	DATE	DSN	CHK	APP	AMENDMENT DESCRIPTION	STATUS
B	12/05/2023	M.KH	M.KH	DR.M.M	ISSUED FOR INFORMATION	IFI

SCALE: AS SHOWN

SHOP DRAWING

DATE: 12/05/2023

DRAWING TITLE

6TH OF OCTOBER MONORAIL
SERVICE WALKWAYS
ZONE (1008)
Z8-BR038

Project Code	Rubric	Initiator	Lot	Ref	Number	Revision
9 3 M	0 4 7 6	A C C	6 0 D E P	D W G	0 8 6 8 5	B

approval is subject to approval of coordination package between multi-discipline

REVIEWED WITH COMMENT
MONORAILS PROJECT

All holes are 22mm U.N.O Length & Area & Weight per piece						
Z8-BR037	L60*6	S235JR	1	1527.6	0.37	8.2
Mark	Profile	Grade	QTY	Length	Area	Weight

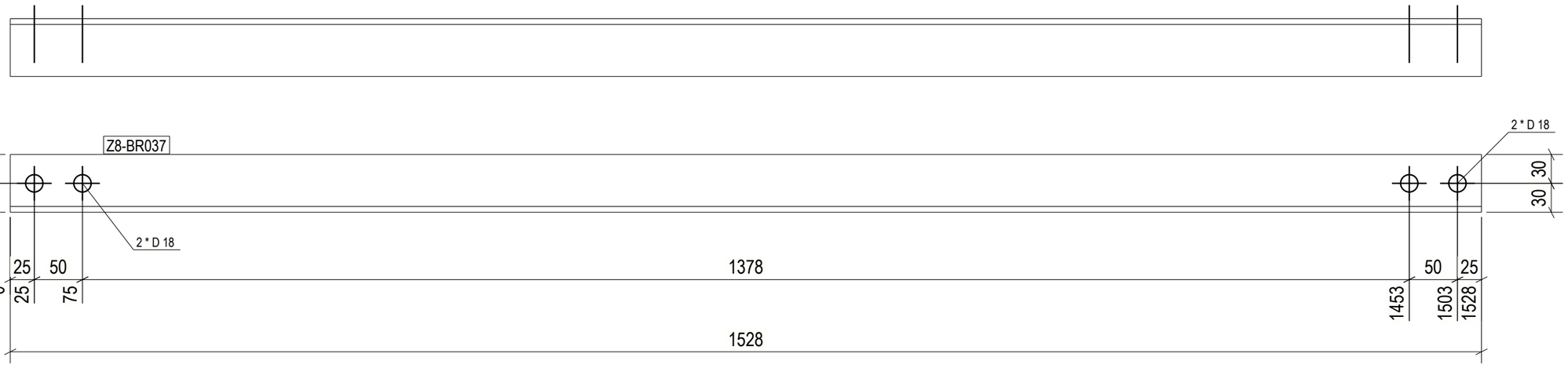

1 REQ'D AS DRAWN MK'D Z8-BR037

6 October Monorail
Engineering Unit
Valid For Construction

GENERAL NOTES:

1. THE DIMENSIONS SHOWN ARE NOMINAL (IN MILLIMETERS), U.N.O.
2. WELD SIZESHALL BE AISC MINIMUM OF 6 mm UNLESS NOTED OTHERWISE.
3. ALL FIELD WELDS SHALL BE INSPECTED PER QUALITY ASSURANCE AND SPECIAL INSPECTIONS.

REFERENCE DRAWINGS

1	93M-BOA-NAT-LOT-04833
2	93M-BOA-NAT-LOT-09170
3	93M-BOA-NAT-LOT-01976
4	93M-BOA-NAT-LOT-20021
5	
6	
7	
8	
9	

6TH OF OCTOBER CITY RAIL TRANSIT MONORAIL

The Authority | Hill International Consultant | Main Contractor | Structural Designer

KEY PLAN:

SCALE	SHOP DRAWING	DATE
AS SHOWN		12/05/2023

REV	DATE	DSN	CHK	APP	AMENDMENTS DESCRIPTION	STATUS
B	12/05/2023	M.KH	M.KH	DR.M.M	ISSUED FOR INFORMATION	IFI
A	12/05/2023	M.KH	M.KH	DR.M.M	ISSUED FOR INFORMATION	IFI

DRAWING TITLE

6TH OF OCTOBER MONORAIL
SERVICE WALKWAYS
ZONE (1008)
Z8-BR037

Project Code	Rubric	Initiator	Lot	Ref	Number	Revision
9 3 M	0 4 7 6	A C C	6 0 D E P	D W G	0 8 8 8 6	B

Tekla structures

approval is subject to approval of coordination package between multi-discipline

REVIEWED WITH COMMENT MONORAILS PROJECT

All holes are 22mm U.N.O Length & Area & Weight per piece						
Z8-BR036	L60*6	S235JR	1	1527.6	0.37	8.2
Mark	Profile	Grade	QTY	Length	Area	Weight

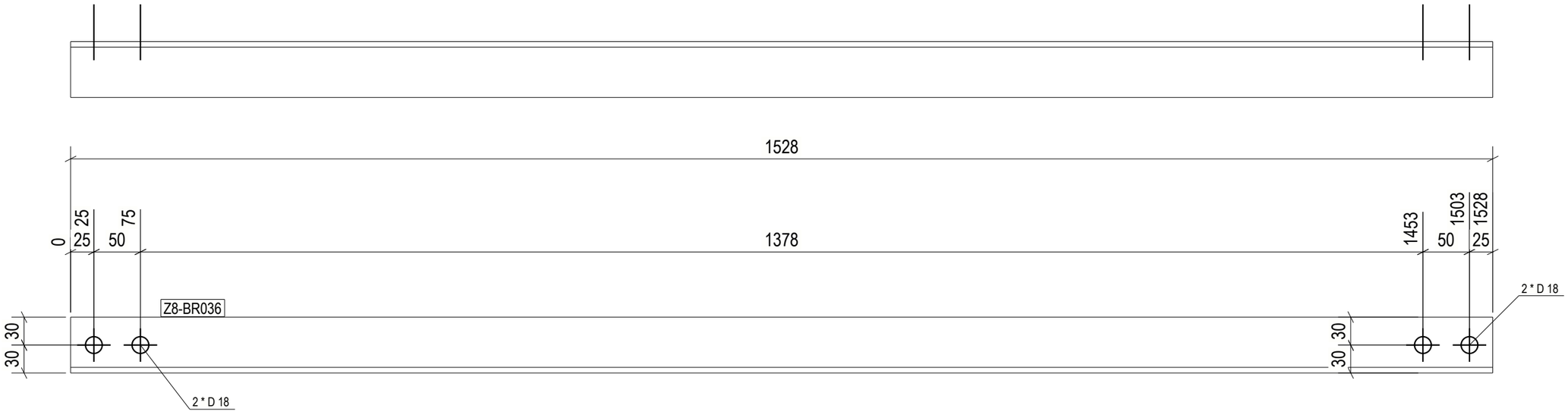

1 REQ'D AS DRAWN MK'D Z8-BR036

6 October Monorail Engineering Unit Valid For Construction

GENERAL NOTES:

1. THE DIMENSIONS SHOWN ARE NOMINAL (IN MILLIMETERS), U.N.O.
2. WELD SIZESHALL BE AISC MINIMUM OF 6 mm UNLESS NOTED OTHERWISE.
3. ALL FIELD WELDS SHALL BE INSPECTED PER QUALITY ASSURANCE AND SPECIAL INSPECTIONS.

REFERENCE DRAWINGS

1	93M-BOA-NAT-LOT-04833
2	93M-BOA-NAT-LOT-09170
3	93M-BOA-NAT-LOT-01976
4	93M-BOA-NAT-LOT-20021
5	
6	
7	
8	
9	

6TH OF OCTOBER CITY RAIL TRANSIT MONORAIL

The Authority | Hill International Consultant | ORASCOM BOMBARDIER Main Contractor | INNOVA Structural Designer

KEY PLAN:

SCALE	SHOP DRAWING	DATE
AS SHOWN		12/05/2023

REV	DATE	DSG	CHK	APP	AMENDMENTS	STATUS
B	12/05/2023	M.KH	M.KH	DR.M.M	ISSUED FOR INFORMATION	IFI

DRAWING TITLE

6TH OF OCTOBER MONORAIL SERVICE WALKWAYS ZONE (1008)

Z8-BR036

Project Code	Rubric	Initiator	Lot	Ref	Number	Revision
93M	0476	ACC	60DEP	DWG	08687	B

Tekla structures

approval is subject to approval of coordination package between multi-discipline

REVIEWED WITH COMMENT
MONORAILS PROJECT

All holes are 22mm U.N.O Length & Area & Weight per piece						
Z8-BR035	L60*6	S235JR	1	1527.6	0.37	8.2
Mark	Profile	Grade	QTY	Length	Area	Weight

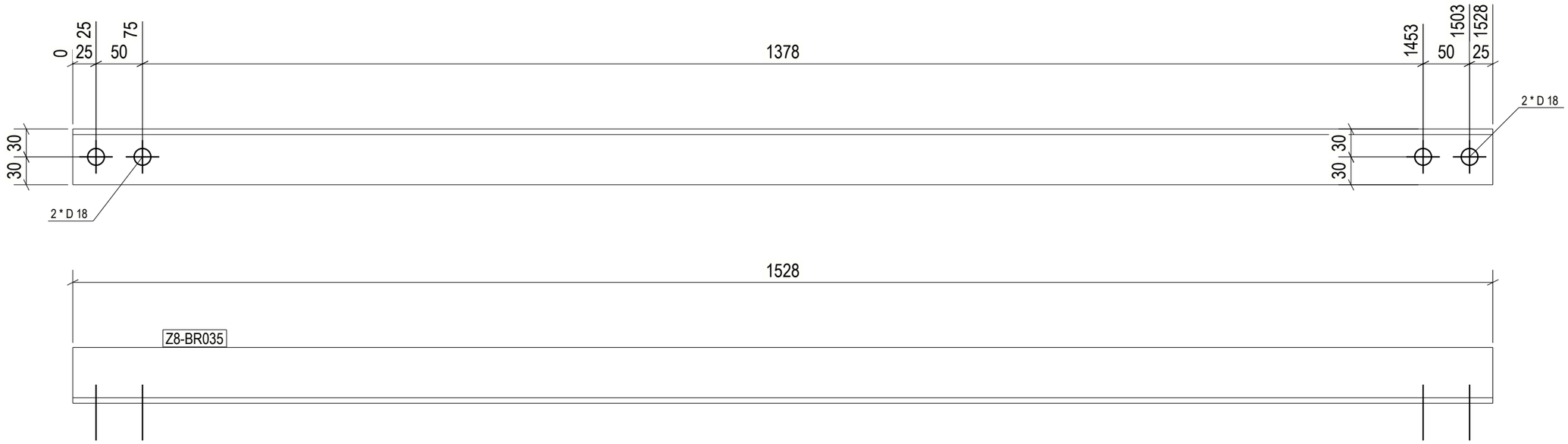

1 REQ'D AS DRAWN MK'D Z8-BR035

6 October Monorail Engineering Unit Valid For Construction

GENERAL NOTES:

1. THE DIMENSIONS SHOWN ARE NOMINAL (IN MILLIMETERS), U.N.O.
2. WELD SIZESHALL BE AISC MINIMUM OF 6 mm UNLESS NOTED OTHERWISE.
3. ALL FIELD WELDS SHALL BE INSPECTED PER QUALITY ASSURANCE AND SPECIAL INSPECTIONS.

REFERENCE DRAWINGS

1	93M-BOA-NAT-LOT-04833
2	93M-BOA-NAT-LOT-09170
3	93M-BOA-NAT-LOT-01976
4	93M-BOA-NAT-LOT-20021
5	
6	
7	
8	
9	

6TH OF OCTOBER CITY RAIL TRANSIT MONORAIL

The Authority | Hill International Consultant | Main Contractor | Structural Designer

KEY PLAN:

SCALE: AS SHOWN | SHOP DRAWING | DATE: 12/05/2023

REV	DATE	DRN	CHK	APP	AMENDMENTS DESCRIPTION	STATUS
B	12/05/2023	M.KH	M.KH	DR.M.M	ISSUED FOR INFORMATION	IFI

DRAWING TITLE

6TH OF OCTOBER MONORAIL SERVICE WALKWAYS ZONE (1008)
Z8-BR035

Project Code	Rubric	Initiator	Lot	Ref	Number	Revision
9 3	M 0 4 7 6	A C C	6 0 D E P	D W G	0 8 6 8 8	B

Tekla structures

approval is subject to approval of coordination package between multi-discipline

REVIEWED WITH COMMENT
MONORAILS PROJECT

All holes are 22mm U.N.O Length & Area & Weight per piece

Mark	Profile	Grade	QTY	Length	Area	Weight
Z8-BR034	L60*6	S235JR	1	1527.6	0.37	8.2

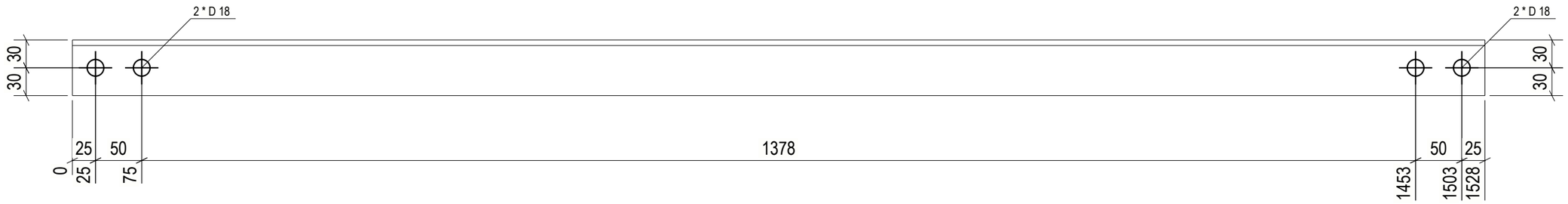

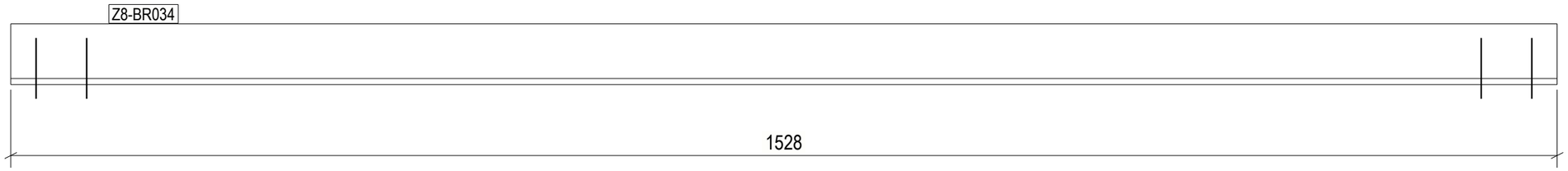

1 REQ'D AS DRAWN MK'D Z8-BR034

6 October Monorail
Engineering Unit
Valid For Construction

GENERAL NOTES:

1. THE DIMENSIONS SHOWN ARE NOMINAL (IN MILLIMETERS), U.N.O.
2. WELD SIZESHALL BE AISC MINIMUM OF 6 mm UNLESS NOTED OTHERWISE.
3. ALL FIELD WELDS SHALL BE INSPECTED PER QUALITY ASSURANCE AND SPECIAL INSPECTIONS.

REFERENCE DRAWINGS

1	93M-BOA-NAT-LOT-04833
2	93M-BOA-NAT-LOT-09170
3	93M-BOA-NAT-LOT-01976
4	93M-BOA-NAT-LOT-20021
5	
6	
7	
8	
9	

6TH OF OCTOBER CITY RAIL TRANSIT MONORAIL

The Authority | Consultant: Hill International | Main Contractor: ORASCOM CONSTRUCTION, BOMBARDIER | Structural Designer: INNOVA TRANSPORTATION

KEY PLAN:

SCALE	SHOP DRAWING	DATE
AS SHOWN		12/05/2023

REV	DATE	DSN	CHK	APP	AMENDMENTS DESCRIPTION	STATUS
B	12/05/2023	M.KH	M.KH	DR.M.M	ISSUED FOR INFORMATION	IFI

DRAWING TITLE

6TH OF OCTOBER MONORAIL SERVICE WALKWAYS ZONE (1008)
Z8-BR034

Project Code	Rubric	Initiator	Lot	Ref	Number	Revision
9 3	M 0 4 7 6	A C C	6 0 D E P	D W G	0 8 6 8 9	B

Tekla structures

approval is subject to approval of coordination package between multi-discipline

REVIEWED WITH COMMENT MONORAILS PROJECT

All holes are 22mm U.N.O Length & Area & Weight per piece						
Z8-BR033	L60*6	S235JR	1	1503.7	0.36	8.1
Mark	Profile	Grade	QTY	Length	Area	Weight

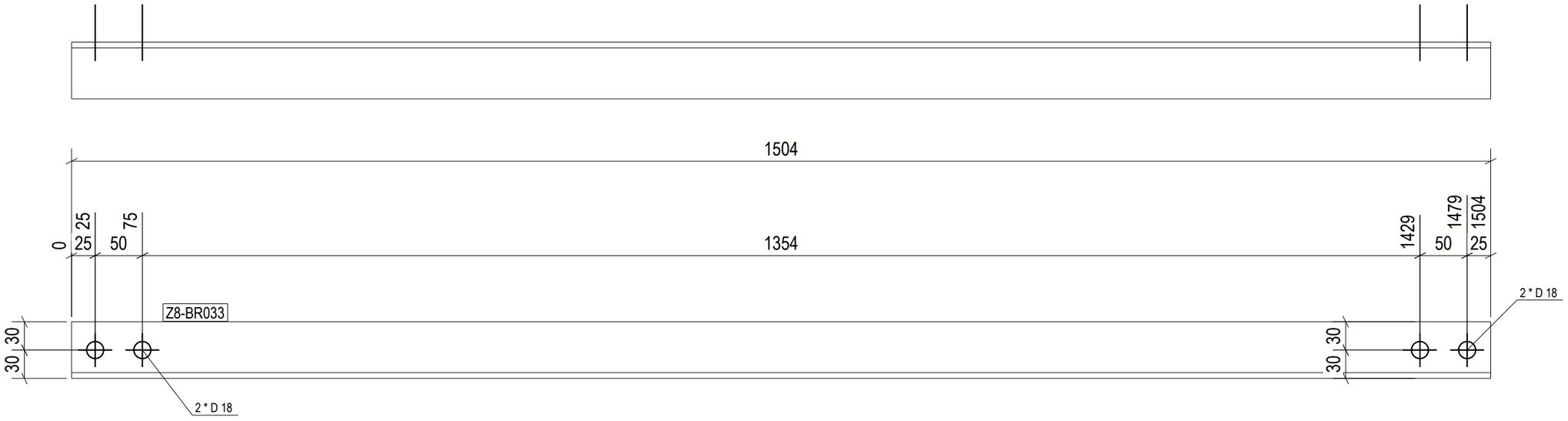

1 REQ'D AS DRAWN MK'D Z8-BR033

6 October Monorail Engineering Unit Valid For Construction

GENERAL NOTES:

1. THE DIMENSIONS SHOWN ARE NOMINAL (IN MILLIMETERS), U.N.O.
2. WELD SIZESHALL BE AISC MINIMUM OF 6 mm UNLESS NOTED OTHERWISE.
3. ALL FIELD WELDS SHALL BE INSPECTED PER QUALITY ASSURANCE AND SPECIAL INSPECTIONS.

REFERENCE DRAWINGS

1	93M-BOA-NAT-LOT-04833
2	93M-BOA-NAT-LOT-09170
3	93M-BOA-NAT-LOT-01976
4	93M-BOA-NAT-LOT-20021
5	
6	
7	
8	
9	

6TH OF OCTOBER CITY RAIL TRANSIT MONORAIL

The Authority | Hill International Consultant | ORASCOM BOMBARDIER Main Contractor | INNOVA Structural Designer

KEY PLAN:

SCALE	SHOP DRAWING	DATE
AS SHOWN		12/05/2023

REV	DATE	DSG	CHK	APP	AMENDMENTS	STATUS
B	12/05/2023	M.KH	M.KH	DR.M.M	ISSUED FOR INFORMATION	IFI

DRAWING TITLE

6TH OF OCTOBER MONORAIL SERVICE WALKWAYS ZONE (1008)

Z8-BR033

Project Code	Rubric	Initiator	Lot	Ref	Number	Revision
93M	0476	ACC	60DEP	DWG	08690	B

Tekla structures

approval is subject to approval of coordination package between multi-discipline

REVIEWED WITH COMMENT
MONORAILS PROJECT

All holes are 22mm U.N.O Length & Area & Weight per piece						
Z8-BR032	L60*6	S235JR	1	1503.6	0.36	8.1
Mark	Profile	Grade	QTY	Length	Area	Weight

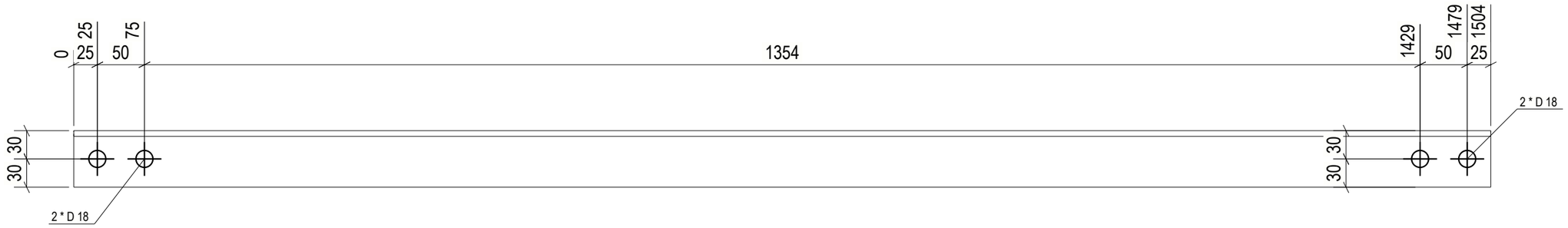

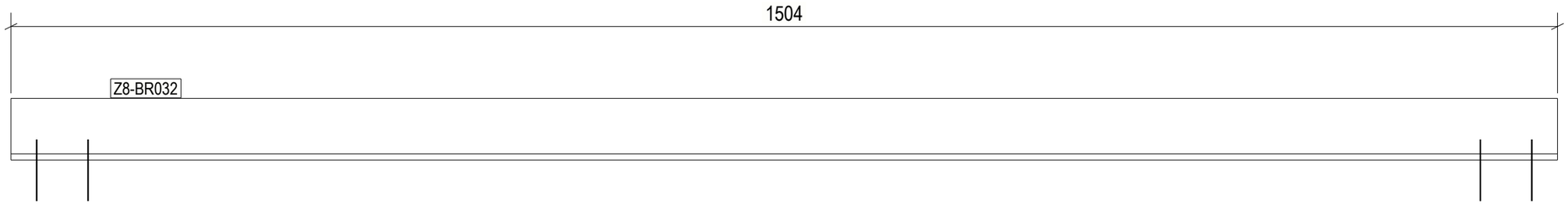

1 REQ'D AS DRAWN MK'D Z8-BR032

6 October Monorail
Engineering Unit
Valid For Construction

GENERAL NOTES:

1. THE DIMENSIONS SHOWN ARE NOMINAL (IN MILLIMETERS), U.N.O.
2. WELD SIZESHALL BE AISC MINIMUM OF 6 mm UNLESS NOTED OTHERWISE.
3. ALL FIELD WELDS SHALL BE INSPECTED PER QUALITY ASSURANCE AND SPECIAL INSPECTIONS.

REFERENCE DRAWINGS

1	93M-BOA-NAT-LOT-04833
2	93M-BOA-NAT-LOT-09170
3	93M-BOA-NAT-LOT-01976
4	93M-BOA-NAT-LOT-20021
5	
6	
7	
8	
9	

6TH OF OCTOBER CITY RAIL TRANSIT MONORAIL

The Authority | Hill International Consultant | Main Contractor | Structural Designer

KEY PLAN:

SCALE	SHOP DRAWING	DATE
AS SHOWN		12/05/2023

REV	DATE	DRN	CHK	APP	AMENDMENTS DESCRIPTION	STATUS
B	12/05/2023	M.KH	M.KH	DR.M.M	ISSUED FOR INFORMATION	IFI

DRAWING TITLE

6TH OF OCTOBER MONORAIL SERVICE WALKWAYS ZONE (1008)
Z8-BR032

Project Code	Rubric	Initiator	Lot	Ref	Number	Revision
93	M047	6ACC	60DEP	DWG	0869	1 B

Tekla structures

approval is subject to approval of coordination package between multi-discipline

REVIEWED WITH COMMENT MONORAILS PROJECT

All holes are 22mm U.N.O Length & Area & Weight per piece						
Z8-BR031	L60*6	S235JR	1	1503.7	0.36	8.1
Mark	Profile	Grade	QTY	Length	Area	Weight

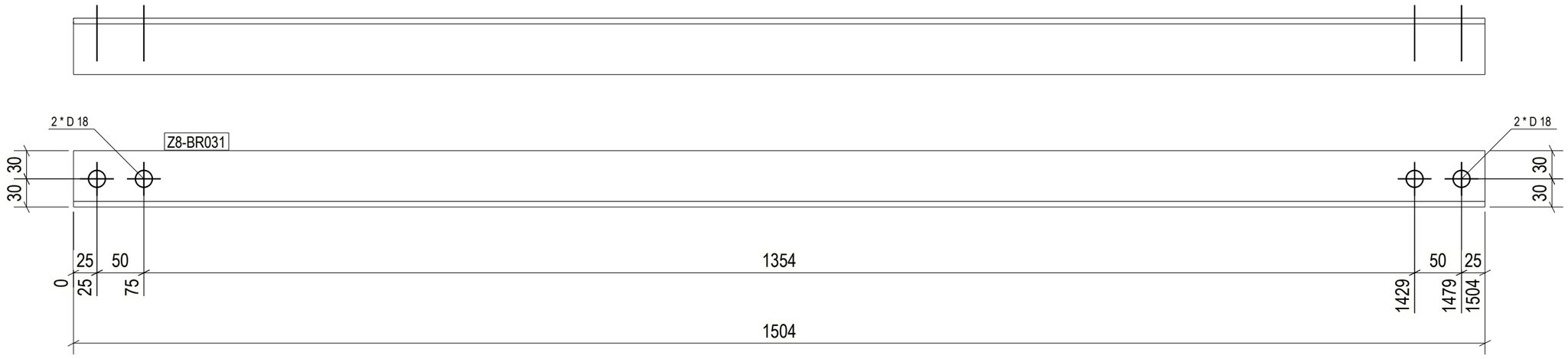

1 REQ'D AS DRAWN MK'D Z8-BR031

6 October Monorail Engineering Unit
Valid For Construction

GENERAL NOTES:

1. THE DIMENSIONS SHOWN ARE NOMINAL (IN MILLIMETERS), U.N.O.
2. WELD SIZESHALL BE AISC MINIMUM OF 6 mm UNLESS NOTED OTHERWISE.
3. ALL FIELD WELDS SHALL BE INSPECTED PER QUALITY ASSURANCE AND SPECIAL INSPECTIONS.

REFERENCE DRAWINGS

1	93M-BOA-NAT-LOT-04833
2	93M-BOA-NAT-LOT-09170
3	93M-BOA-NAT-LOT-01976
4	93M-BOA-NAT-LOT-20021
5	
6	
7	
8	
9	

6TH OF OCTOBER CITY RAIL TRANSIT MONORAIL

The Authority | Hill International Consultant | ORASCOM BOMBARDIER Main Contractor | INNOVA Structural Designer

KEY PLAN:

SCALE	SHOP DRAWING	DATE
AS SHOWN		12/05/2023

REV	DATE	DSG	CHK	APP	AMENDMENTS	STATUS
B	12/05/2023	M.KH	M.KH	DR.M.M	ISSUED FOR INFORMATION	IFI

DRAWING TITLE

6TH OF OCTOBER MONORAIL SERVICE WALKWAYS ZONE (1008)
Z8-BR031

Project Code	Rubric	Initiator	Lot	Ref	Number	Revision
93M	0476	ACC	60DEP	DWG	08692	B

Tekla structures

approval is subject to approval of coordination package between multi-discipline

REVIEWED WITH COMMENT
MONORAILS PROJECT

All holes are 22mm U.N.O Length & Area & Weight per piece

Mark	Profile	Grade	QTY	Length	Area	Weight
Z8-BR030	L60*6	S235JR	1	1503.6	0.36	8.1

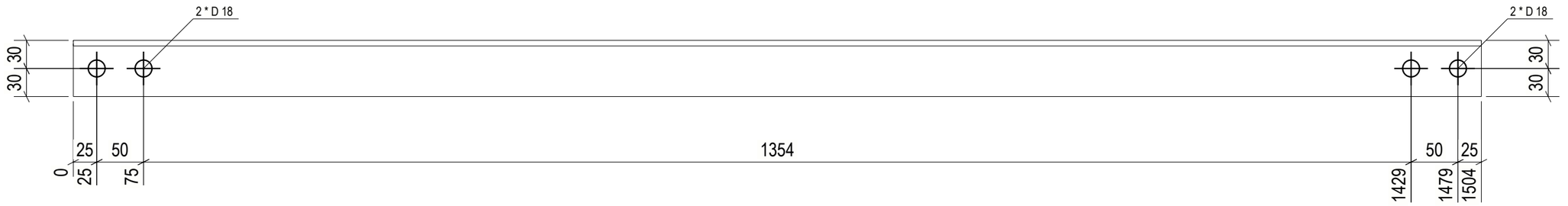

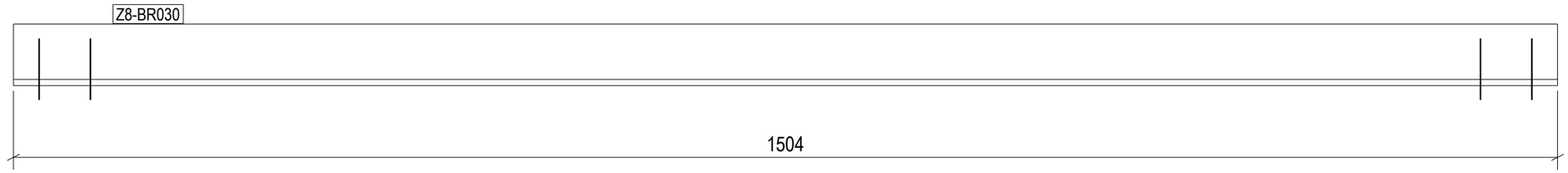

1 REQ'D AS DRAWN MK'D Z8-BR030

GENERAL NOTES:

1. THE DIMENSIONS SHOWN ARE NOMINAL (IN MILLIMETERS), U.N.O.
2. WELD SIZESHALL BE AISC MINIMUM OF 6 mm UNLESS NOTED OTHERWISE.
3. ALL FIELD WELDS SHALL BE INSPECTED PER QUALITY ASSURANCE AND SPECIAL INSPECTIONS.

REFERENCE DRAWINGS

1	93M-BOA-NAT-LOT-04833
2	93M-BOA-NAT-LOT-09170
3	93M-BOA-NAT-LOT-01976
4	93M-BOA-NAT-LOT-20021
5	
6	
7	
8	
9	

6TH OF OCTOBER CITY RAIL TRANSIT MONORAIL

The Authority | Hill International Consultant | Main Contractor | Structural Designer

KEY PLAN:

6 October Monorail Engineering Unit Valid For Construction

SCALE	SHOP DRAWING	DATE
AS SHOWN		12/05/2023

REV	DATE	DSN	CHK	APP	AMENDMENTS DESCRIPTION	STATUS
B	12/05/2023	M.KH	M.KH	DR.M.M	ISSUED FOR INFORMATION	IFI

DRAWING TITLE

6TH OF OCTOBER MONORAIL SERVICE WALKWAYS ZONE (1008)
Z8-BR030

Project Code	Rubric	Initiator	Lot	Ref	Number	Revision
9 3	M 0 4 7 6	A C C	6 0 D E P	D W G	0 8 6 9 3	B

Tekla structures

approval is subject to approval of coordination package between multi-discipline

REVIEWED WITH COMMENT MONORAILS PROJECT

All holes are 22mm U.N.O Length & Area & Weight per piece						
Z8-BR029	L60*6	S235JR	1	1303.7	0.31	7.0
Mark	Profile	Grade	QTY	Length	Area	Weight

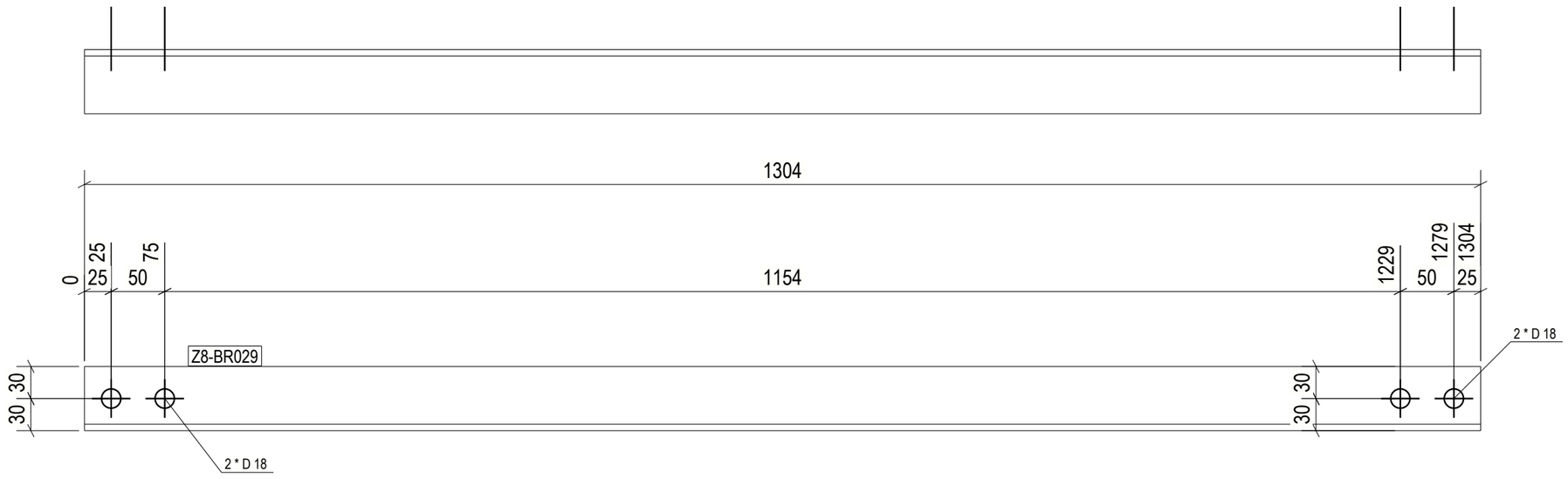

1 REQ'D AS DRAWN MK'D Z8-BR029

6 October Monorail Engineering Unit Valid For Construction

GENERAL NOTES:

1. THE DIMENSIONS SHOWN ARE NOMINAL (IN MILLIMETERS), U.N.O.
2. WELD SIZESHALL BE AISC MINIMUM OF 6 mm UNLESS NOTED OTHERWISE.
3. ALL FIELD WELDS SHALL BE INSPECTED PER QUALITY ASSURANCE AND SPECIAL INSPECTIONS.

REFERENCE DRAWINGS

1	93M-BOA-NAT-LOT-04833
2	93M-BOA-NAT-LOT-09170
3	93M-BOA-NAT-LOT-01976
4	93M-BOA-NAT-LOT-20021
5	
6	
7	
8	
9	

6TH OF OCTOBER CITY RAIL TRANSIT MONORAIL

The Authority | Hill International Consultant | ORASCOM BOMBARDIER Main Contractor | INNOVA Structural Designer

KEY PLAN:

SCALE	SHOP DRAWING	DATE
AS SHOWN		12/05/2023

REV	DATE	DSG	CHK	APP	AMENDMENTS	STATUS
B	12/05/2023	M.KH	M.KH	DR.M.M	ISSUED FOR INFORMATION	IFI

DRAWING TITLE

6TH OF OCTOBER MONORAIL SERVICE WALKWAYS ZONE (1008)

Z8-BR029

Project Code	Rubric	Initiator	Lot	Ref	Number	Revision
93M	0476	ACC	60DEP	DWG	08694	B

Tekla structures

approval is subject to approval of coordination package between multi-discipline

REVIEWED WITH COMMENT MONORAILS PROJECT

All holes are 22mm U.N.O Length & Area & Weight per piece						
Z8-BR028	L60*6	S235JR	1	1303.9	0.31	7.0
Mark	Profile	Grade	QTY	Length	Area	Weight

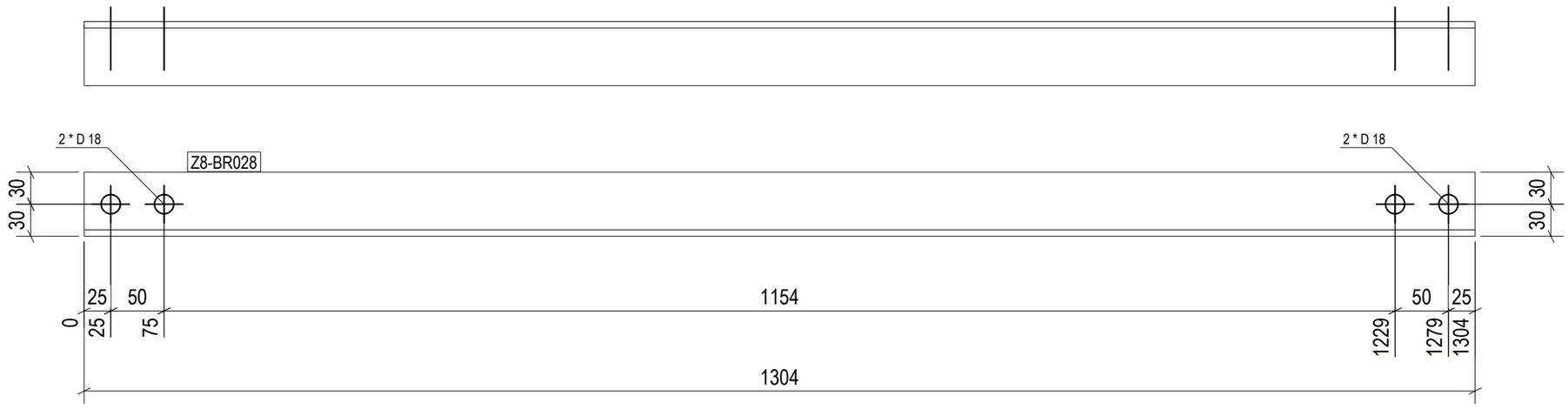

1 REQ'D AS DRAWN MK'D Z8-BR028

6 October Monorail Engineering Unit
Valid For Construction

GENERAL NOTES:

1. THE DIMENSIONS SHOWN ARE NOMINAL (IN MILLIMETERS), U.N.O.
2. WELD SIZESHALL BE AISC MINIMUM OF 6 mm UNLESS NOTED OTHERWISE.
3. ALL FIELD WELDS SHALL BE INSPECTED PER QUALITY ASSURANCE AND SPECIAL INSPECTIONS.

REFERENCE DRAWINGS

1	93M-BOA-NAT-LOT-04833
2	93M-BOA-NAT-LOT-09170
3	93M-BOA-NAT-LOT-01976
4	93M-BOA-NAT-LOT-20021
5	
6	
7	
8	
9	

6TH OF OCTOBER CITY RAIL TRANSIT MONORAIL

The Authority | Hill International Consultant | ORASCOM BOMBARDIER Main Contractor | INNOVA Structural Designer

KEY PLAN:

SCALE	SHOP DRAWING	DATE
AS SHOWN		12/05/2023

REV	DATE	DSG	CHK	APP	AMENDMENTS	STATUS
B	12/05/2023	M.KH	M.KH	DR.M.M	ISSUED FOR INFORMATION	IFI

DRAWING TITLE

6TH OF OCTOBER MONORAIL SERVICE WALKWAYS ZONE (1008)
Z8-BR028

Project Code	Rubric	Initiator	Lot	Ref	Number	Revision
93M	0476	ACC	60DEP	DWG	08695	B

Tekla structures

approval is subject to approval of coordination package between multi-discipline

REVIEWED WITH COMMENT
MONORAILS PROJECT

All holes are 22mm U.N.O Length & Area & Weight per piece						
Z8-BR027	L60*6	S235JR	1	1330.6	0.32	7.1
Mark	Profile	Grade	QTY	Length	Area	Weight

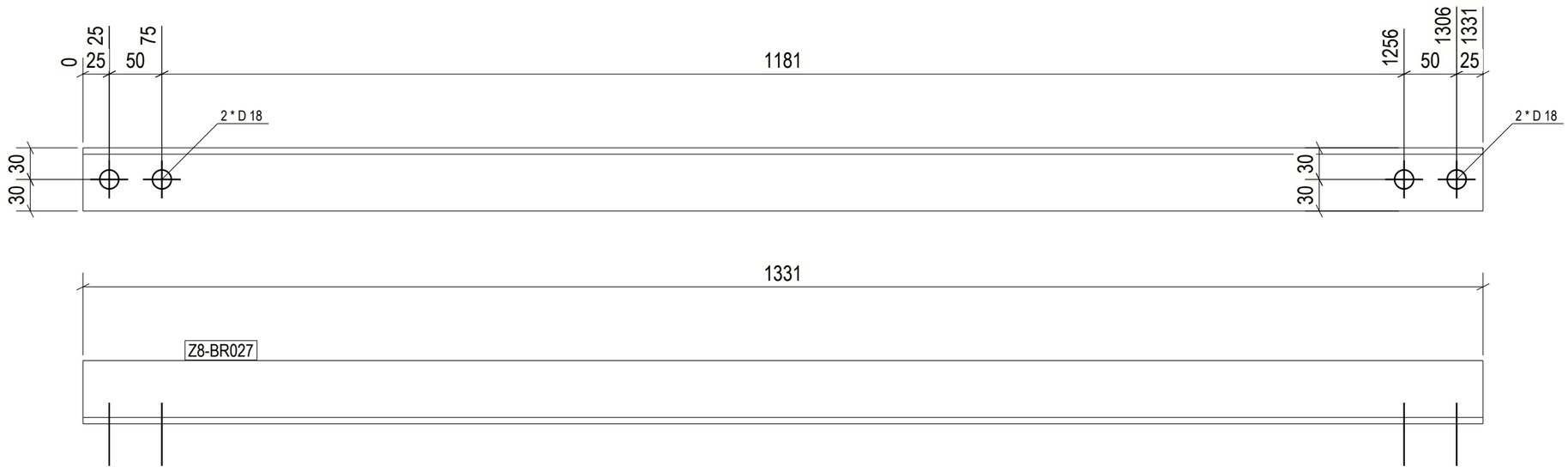

1 REQ'D AS DRAWN MK'D Z8-BR027

GENERAL NOTES:

1. THE DIMENSIONS SHOWN ARE NOMINAL (IN MILLIMETERS), U.N.O.
2. WELD SIZESHALL BE AISC MINIMUM OF 6 mm UNLESS NOTED OTHERWISE.
3. ALL FIELD WELDS SHALL BE INSPECTED PER QUALITY ASSURANCE AND SPECIAL INSPECTIONS.

REFERENCE DRAWINGS

1	93M-BOA-NAT-LOT-04833
2	93M-BOA-NAT-LOT-09170
3	93M-BOA-NAT-LOT-01976
4	93M-BOA-NAT-LOT-20021
5	
6	
7	
8	
9	

6TH OF OCTOBER CITY RAIL TRANSIT MONORAIL

The Authority | Hill International Consultant | Main Contractor | Structural Designer

KEY PLAN:

6 October Monorail
Engineering Unit
Valid For Construction

SCALE	SHOP DRAWING	DATE
AS SHOWN		12/05/2023

REV	DATE	DRN	CHK	APP	AMENDMENTS	STATUS
B	12/05/2023	M.KH	M.KH	DR.M.M	ISSUED FOR INFORMATION	IFI

DRAWING TITLE

6TH OF OCTOBER MONORAIL SERVICE WALKWAYS ZONE (1008)
Z8-BR027

Project Code	Rubric	Initiator	Lot	Ref	Number	Revision
9 3	M 0 4 7 6	A C C	6 0 D E P	D W G	0 8 6 9 6	B

Tekla structures

approval is subject to approval of coordination package between multi-discipline

REVIEWED WITH COMMENT
MONORAILS PROJECT

All holes are 22mm U.N.O Length & Area & Weight per piece						
Z8-BR026	L60*6	S235JR	1	1330.8	0.32	7.1
Mark	Profile	Grade	QTY	Length	Area	Weight

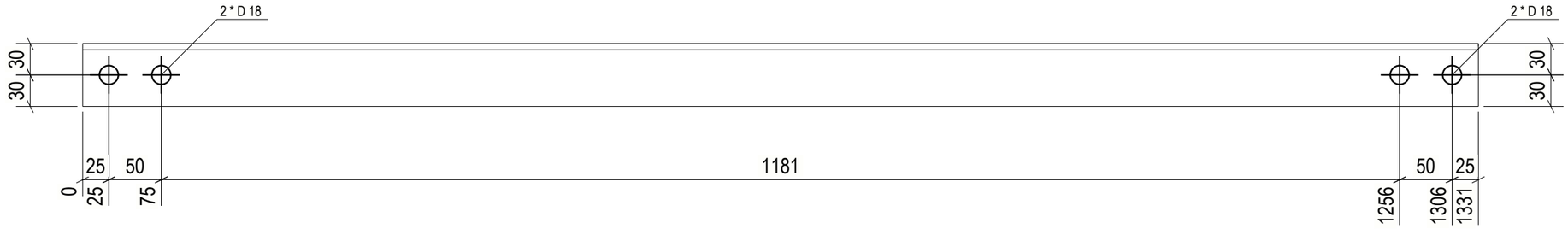

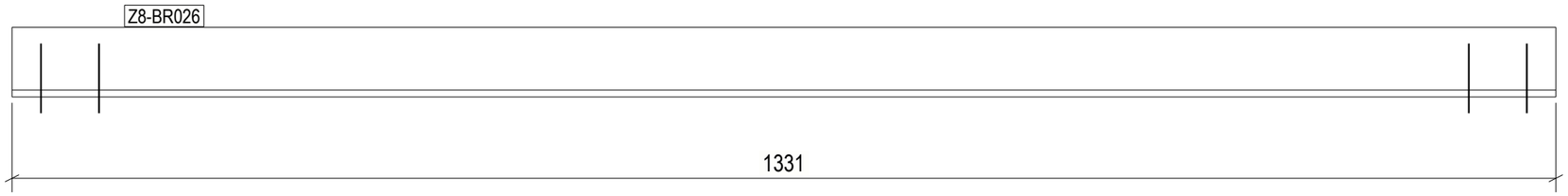

1 REQ'D AS DRAWN MK'D Z8-BR026

GENERAL NOTES:

1. THE DIMENSIONS SHOWN ARE NOMINAL (IN MILLIMETERS), U.N.O.
2. WELD SIZESHALL BE AISC MINIMUM OF 6 mm UNLESS NOTED OTHERWISE.
3. ALL FIELD WELDS SHALL BE INSPECTED PER QUALITY ASSURANCE AND SPECIAL INSPECTIONS.

REFERENCE DRAWINGS

1	93M-BOA-NAT-LOT-04833
2	93M-BOA-NAT-LOT-09170
3	93M-BOA-NAT-LOT-01976
4	93M-BOA-NAT-LOT-20021
5	
6	
7	
8	
9	

6TH OF OCTOBER CITY RAIL TRANSIT MONORAIL

The Authority — Hill International Consultant — Main Contractor — Structural Designer

KEY PLAN:

6 October Monorail Engineering Unit Valid For Construction

SCALE	SHOP DRAWING	DATE
AS SHOWN		12/05/2023

REV	DATE	DSN	CHK	APP	AMENDMENTS DESCRIPTION	STATUS
B	12/05/2023	M.KH	M.KH	DR.M.M	ISSUED FOR INFORMATION	IFI

DRAWING TITLE

6TH OF OCTOBER MONORAIL SERVICE WALKWAYS ZONE (1008)
Z8-BR026

Project Code	Rubric	Initiator	Lot	Ref	Number	Revision
9 3	M 0 4 7 6	A C C	6 0 D E	P D W	G 0 8 6 9 7	B

Tekla structures

approval is subject to approval of coordination package between multi-discipline

REVIEWED WITH COMMENT
MONORAILS PROJECT

All holes are 22mm U.N.O Length & Area & Weight per piece

Mark	Profile	Grade	QTY	Length	Area	Weight
Z8-BR025	L70X70X7	S235JR	3	979.3	0.27	7.2

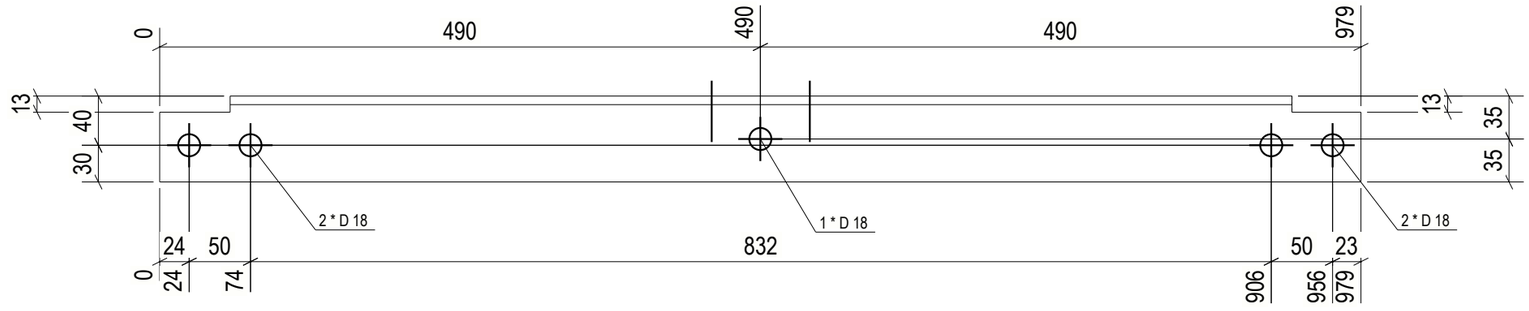

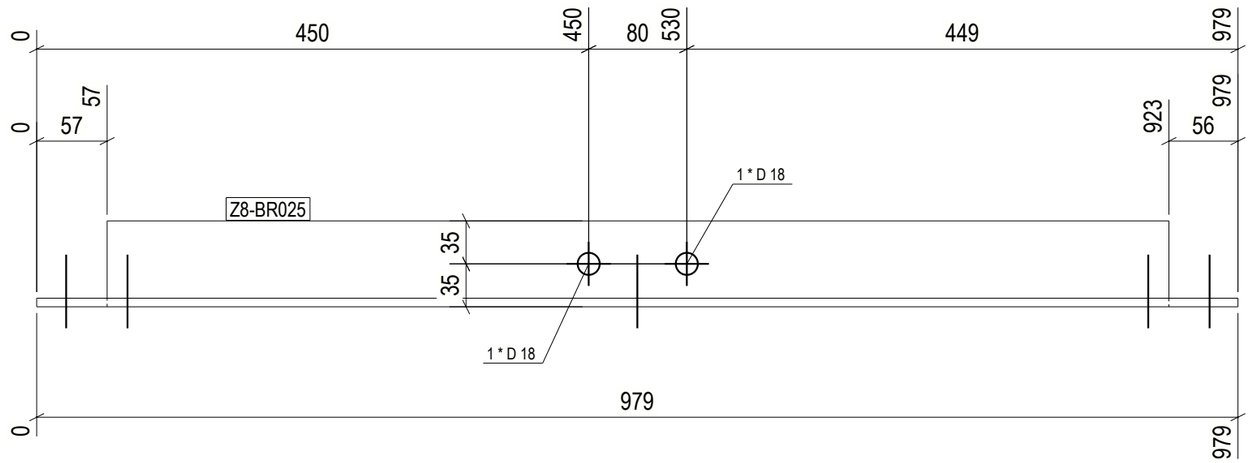

3 REQ'D AS DRAWN MK'D Z8-BR025

6 October Monorail
Engineering Unit
Valid For Construction

GENERAL NOTES:

1. THE DIMENSIONS SHOWN ARE NOMINAL (IN MILLIMETERS), U.N.O.
2. WELD SIZESHALL BE AISC MINIMUM OF 6 mm UNLESS NOTED OTHERWISE.
3. ALL FIELD WELDS SHALL BE INSPECTED PER QUALITY ASSURANCE AND SPECIAL INSPECTIONS.

REFERENCE DRAWINGS

1	93M-BOA-NAT-LOT-04833
2	93M-BOA-NAT-LOT-09170
3	93M-BOA-NAT-LOT-01976
4	93M-BOA-NAT-LOT-20021
5	
6	
7	
8	
9	

6TH OF OCTOBER CITY RAIL TRANSIT MONORAIL

The Authority | Consultant: Hill International | Main Contractor | Structural Designer

KEY PLAN:

SCALE: AS SHOWN | SHOP DRAWING | DATE: 12/05/2023

REV	DATE	DSN	CHK	APP	AMENDMENT DESCRIPTION	STATUS
B	12/05/2023	M.KH	M.KH	DR.M.M	ISSUED FOR INFORMATION	IFI

DRAWING TITLE

6TH OF OCTOBER MONORAIL SERVICE WALKWAYS ZONE (1008)
Z8-BR025

Project Code	Rubric	Initiator	Lot	Ref	Number	Revision
9 3	M 0 4 7 6	A C C	6 0 D E P	D W G	0 8 6 9 8	B

Tekla structures

approval is subject to approval of coordination package between multi-discipline

REVIEWED WITH COMMENT
MONORAILS PROJECT

All holes are 22mm U.N.O Length & Area & Weight per piece						
Z8-BR024	L70X70X7	S235JR	8	979.3	0.27	7.2
Mark	Profile	Grade	QTY	Length	Area	Weight

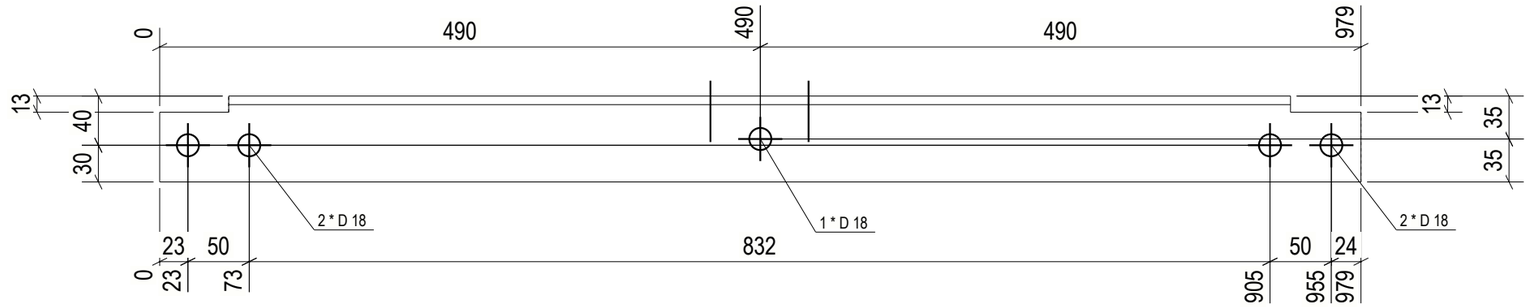

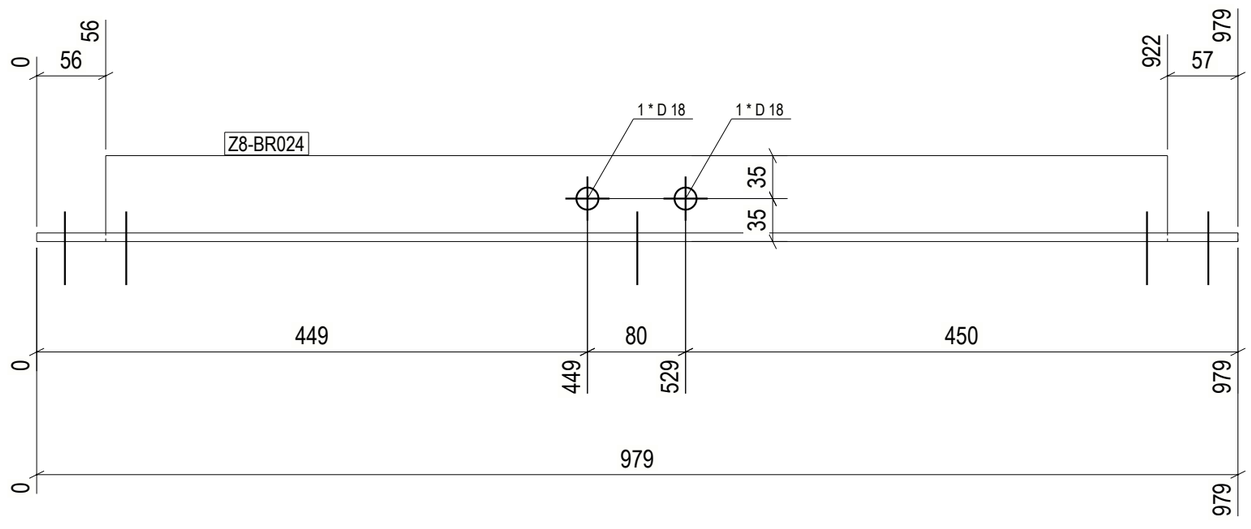

8 REQ'D AS DRAWN MK'D Z8-BR024

6TH OF OCTOBER CITY RAIL TRANSIT MONORAIL

The Authority | Hill International Consultant | Main Contractor | Structural Designer

KEY PLAN:

6 October Monorail
Engineering Unit
Valid For Construction

GENERAL NOTES:

1. THE DIMENSIONS SHOWN ARE NOMINAL (IN MILLIMETERS), U.N.O.
2. WELD SIZESHALL BE AISC MINIMUM OF 6 mm UNLESS NOTED OTHERWISE.
3. ALL FIELD WELDS SHALL BE INSPECTED PER QUALITY ASSURANCE AND SPECIAL INSPECTIONS.

REFERENCE DRAWINGS

1	93M-BOA-NAT-LOT-04833
2	93M-BOA-NAT-LOT-09170
3	93M-BOA-NAT-LOT-01976
4	93M-BOA-NAT-LOT-20021
5	
6	
7	
8	
9	

SCALE	SHOP DRAWING	DATE
AS SHOWN		12/05/2023

REV	DATE	DSN	CHK	APP	AMENDMENT DESCRIPTION	STATUS
B	12/05/2023	M.KH	M.KH	DR.M.M	ISSUED FOR INFORMATION	IFI

DRAWING TITLE

6TH OF OCTOBER MONORAIL SERVICE WALKWAYS ZONE (1008)
Z8-BR024

Project Code	Rubric	Initiator	Lot	Ref	Number	Revision
93	M047	6ACC	60DE	PDWG	0869	B

Tekla structures

approval is subject to approval of coordination package between multi-discipline

REVIEWED WITH COMMENT
MONORAILS PROJECT

All holes are 22mm U.N.O Length & Area & Weight per piece						
Z8-BR023	L70X70X7	S235JR	4	979.3	0.27	7.2
Mark	Profile	Grade	QTY	Length	Area	Weight

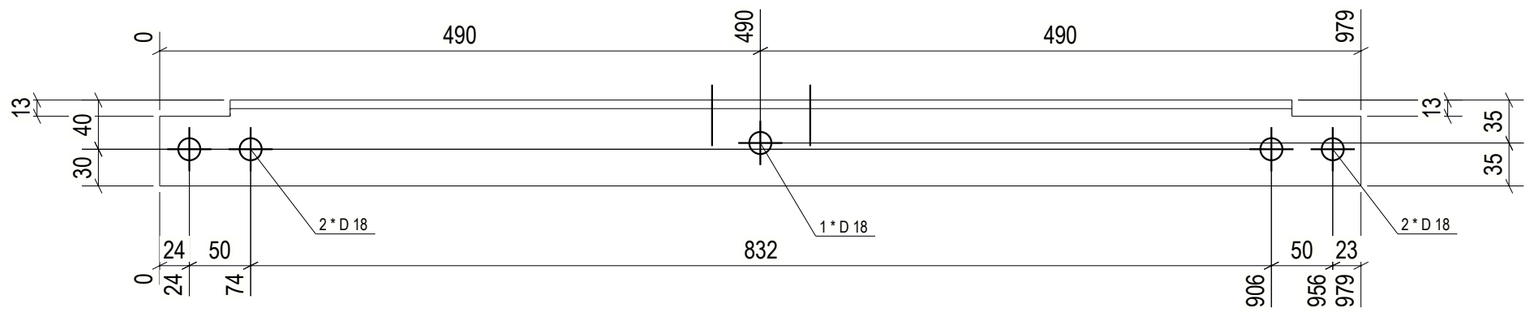

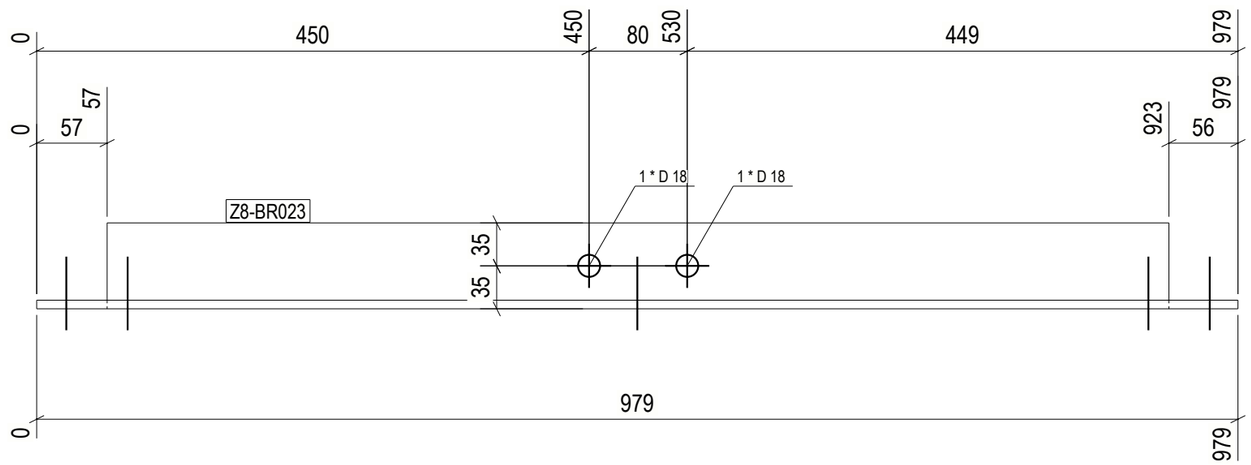

4 REQ'D AS DRAWN MK'D Z8-BR023

6 October Monorail
Engineering Unit
Valid For Construction

GENERAL NOTES:

1. THE DIMENSIONS SHOWN ARE NOMINAL (IN MILLIMETERS), U.N.O.
2. WELD SIZESHALL BE AISC MINIMUM OF 6 mm UNLESS NOTED OTHERWISE.
3. ALL FIELD WELDS SHALL BE INSPECTED PER QUALITY ASSURANCE AND SPECIAL INSPECTIONS.

REFERENCE DRAWINGS

1	93M-BOA-NAT-LOT-04833
2	93M-BOA-NAT-LOT-09170
3	93M-BOA-NAT-LOT-01976
4	93M-BOA-NAT-LOT-20021
5	
6	
7	
8	
9	

6TH OF OCTOBER CITY RAIL TRANSIT MONORAIL

The Authority | Hill International Consultant | Main Contractor | Structural Designer

KEY PLAN:

SCALE	SHOP DRAWING	DATE
AS SHOWN		12/05/2023

REV	DATE	DSN	CHK	APP	AMENDMENT DESCRIPTION	STATUS
B	12/05/2023	M.KH	M.KH	DR.M.M	ISSUED FOR INFORMATION	IFI

DRAWING TITLE

6TH OF OCTOBER MONORAIL
SERVICE WALKWAYS
ZONE (1008)
Z8-BR023

Project Code	Rubric	Initiator	Lot	Ref	Number	Revision
9 3	M 0 4 7 6	A C C	6 0 D E P	D W G	0 8 7 0 0	B

Tekla structures

approval is subject to approval of coordination package between multi-discipline

REVIEWED WITH COMMENT MONORAILS PROJECT

All holes are 22mm U.N.O Length & Area & Weight per piece						
Z8-BR022	L60*6	S235JR	2	1527.6	0.37	8.2
Mark	Profile	Grade	QTY	Length	Area	Weight

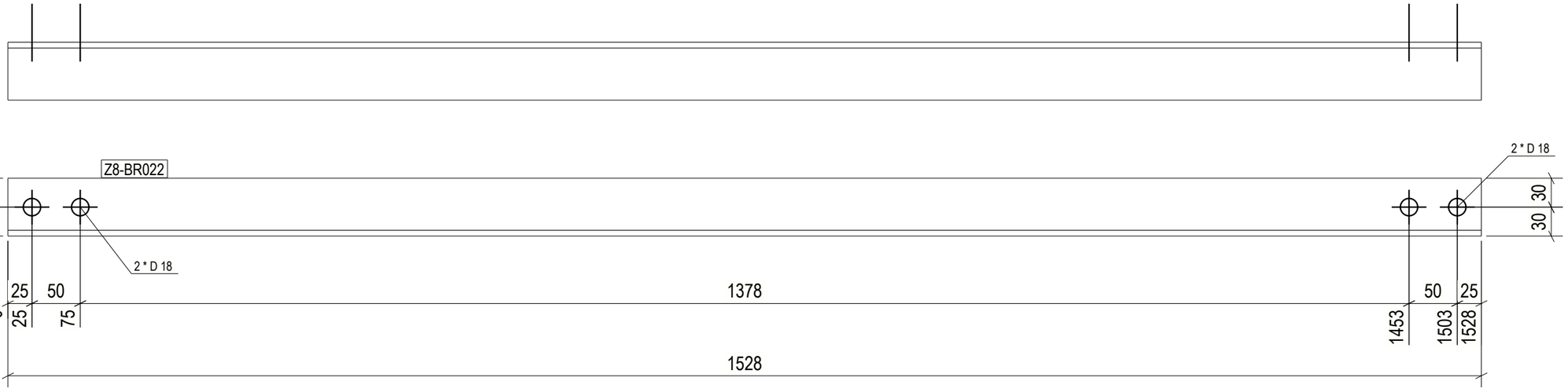

2 REQ'D AS DRAWN MK'D Z8-BR022

6 October Monorail Engineering Unit
Valid For Construction

GENERAL NOTES:

1. THE DIMENSIONS SHOWN ARE NOMINAL (IN MILLIMETERS), U.N.O.
2. WELD SIZESHALL BE AISC MINIMUM OF 6 mm UNLESS NOTED OTHERWISE.
3. ALL FIELD WELDS SHALL BE INSPECTED PER QUALITY ASSURANCE AND SPECIAL INSPECTIONS.

REFERENCE DRAWINGS

1	93M-BOA-NAT-LOT-04833
2	93M-BOA-NAT-LOT-09170
3	93M-BOA-NAT-LOT-01976
4	93M-BOA-NAT-LOT-20021
5	
6	
7	
8	
9	

6TH OF OCTOBER CITY RAIL TRANSIT MONORAIL

The Authority | Hill International Consultant | ORASCOM BOMBARDIER Main Contractor | INNOVA Structural Designer

KEY PLAN:

SCALE	SHOP DRAWING	DATE
AS SHOWN		12/05/2023

REV	DATE	DSG	CHK	APP	AMENDMENTS	STATUS
B	12/05/2023	M.KH	M.KH	DR.M.M	ISSUED FOR INFORMATION	IFI

DRAWING TITLE

6TH OF OCTOBER MONORAIL SERVICE WALKWAYS ZONE (1008)
Z8-BR022

Project Code	Rubric	Initiator	Lot	Ref	Number	Revision
93M	0476	ACC	60DEP	DWG	08701	B

Tekla structures

approval is subject to approval of coordination package between multi-discipline

REVIEWED WITH COMMENT
MONORAILS PROJECT

All holes are 22mm U.N.O Length & Area & Weight per piece						
Z8-BR021	L60*6	S235JR	2	1527.6	0.37	8.2
Mark	Profile	Grade	QTY	Length	Area	Weight

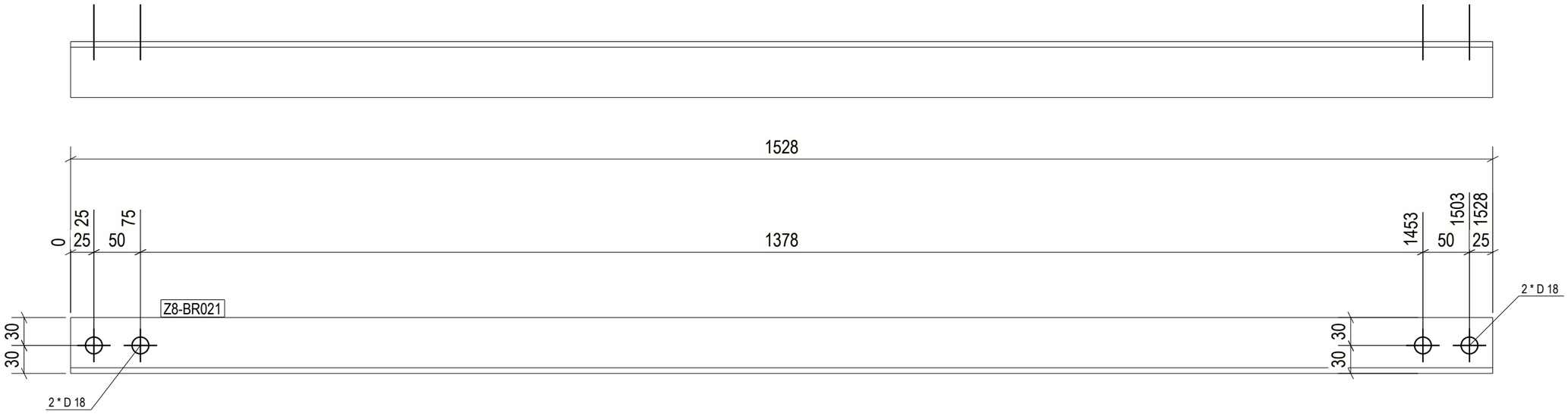

2 REQ'D AS DRAWN MK'D Z8-BR021

GENERAL NOTES:

1. THE DIMENSIONS SHOWN ARE NOMINAL (IN MILLIMETERS), U.N.O.
2. WELD SIZESHALL BE AISC MINIMUM OF 6 mm UNLESS NOTED OTHERWISE.
3. ALL FIELD WELDS SHALL BE INSPECTED PER QUALITY ASSURANCE AND SPECIAL INSPECTIONS.

REFERENCE DRAWINGS

1	93M-BOA-NAT-LOT-04833
2	93M-BOA-NAT-LOT-09170
3	93M-BOA-NAT-LOT-01976
4	93M-BOA-NAT-LOT-20021
5	
6	
7	
8	
9	

6TH OF OCTOBER CITY RAIL TRANSIT MONORAIL

The Authority | Consultant: Hill International | Main Contractor | Structural Designer

KEY PLAN:

6 October Monorail Engineering Unit
Valid For Construction

SCALE	SHOP DRAWING	DATE
AS SHOWN		12/05/2023

REV	DATE	DWG	CHK	APP	AMENDMENT DESCRIPTION	STATUS
B	12/05/2023	M.KH	M.KH	DR.M.M	ISSUED FOR INFORMATION	IFI

DRAWING TITLE

6TH OF OCTOBER MONORAIL
SERVICE WALKWAYS
ZONE (1008)
Z8-BR021

Project Code	Rubric	Initiator	Lot	Ref	Number	Revision
9 3 M	0 4 7 6	A C C	6 0 D E P	D W G	0 8 7 0 2	B

Tekla structures

approval is subject to approval of coordination package between multi-discipline

REVIEWED WITH COMMENT
MONORAILS PROJECT

All holes are 22mm U.N.O Length & Area & Weight per piece						
Z8-BR020	L60*6	S235JR	2	1527.6	0.37	8.2
Mark	Profile	Grade	QTY	Length	Area	Weight

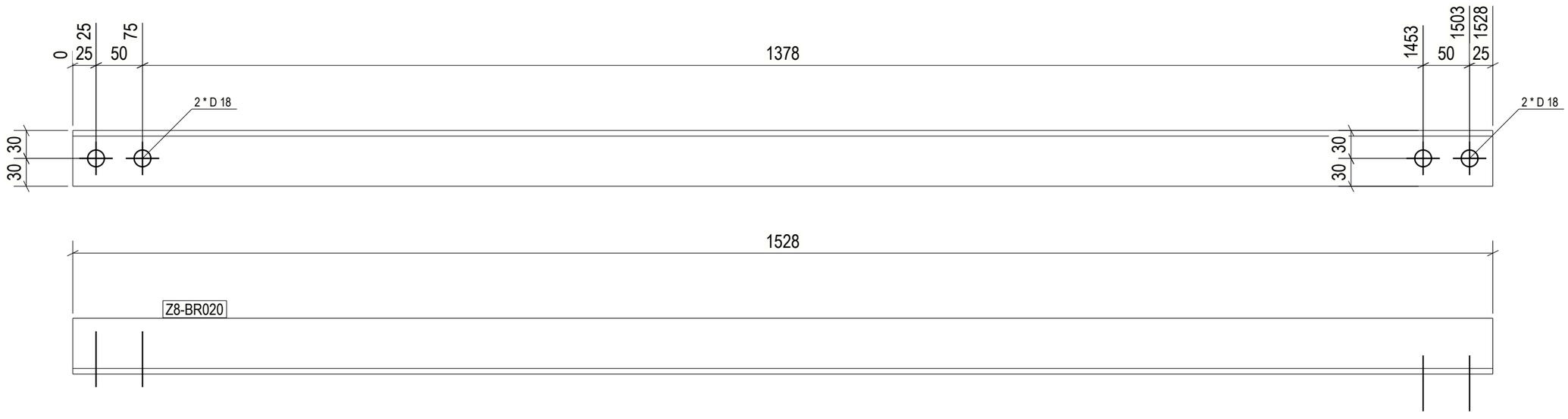

2 REQ'D AS DRAWN MK'D Z8-BR020

GENERAL NOTES:

1. THE DIMENSIONS SHOWN ARE NOMINAL (IN MILLIMETERS), U.N.O.
2. WELD SIZESHALL BE AISC MINIMUM OF 6 mm UNLESS NOTED OTHERWISE.
3. ALL FIELD WELDS SHALL BE INSPECTED PER QUALITY ASSURANCE AND SPECIAL INSPECTIONS.

REFERENCE DRAWINGS

1	93M-BOA-NAT-LOT-04833
2	93M-BOA-NAT-LOT-09170
3	93M-BOA-NAT-LOT-01976
4	93M-BOA-NAT-LOT-20021
5	
6	
7	
8	
9	

6TH OF OCTOBER CITY RAIL TRANSIT MONORAIL

The Authority | Hill International Consultant | Main Contractor | Structural Designer

KEY PLAN:

6 October Monorail Engineering Unit Valid For Construction

SCALE	SHOP DRAWING	DATE
AS SHOWN		12/05/2023

REV	DATE	DRN	CHK	APP	AMENDMENTS	STATUS
B	12/05/2023	M.KH	M.KH	DR.M.M	ISSUED FOR INFORMATION	IFI

DRAWING TITLE

6TH OF OCTOBER MONORAIL SERVICE WALKWAYS ZONE (1008)
Z8-BR020

Project Code	Rubric	Initiator	Lot	Ref	Number	Revision
9 3 M	0 4 7 6	A C C	6 0 D E P	D W G	0 8 7 0 3	B

Tekla structures

approval is subject to approval of coordination package between multi-discipline

REVIEWED WITH COMMENT
MONORAILS PROJECT

All holes are 22mm U.N.O Length & Area & Weight per piece

Mark	Profile	Grade	QTY	Length	Area	Weight
Z8-BR019	L60*6	S235JR	2	1527.6	0.37	8.2

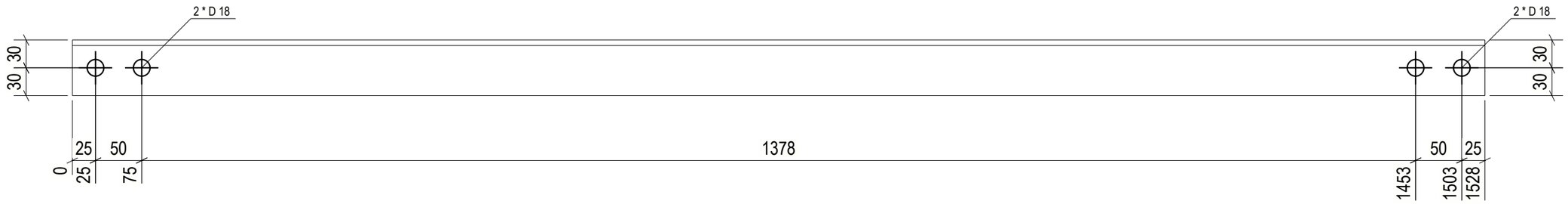

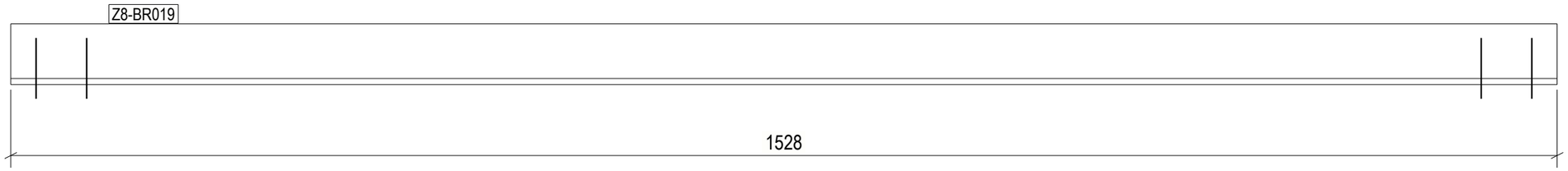

2 REQ'D AS DRAWN MK'D Z8-BR019

6 October Monorail
Engineering Unit
Valid For Construction

GENERAL NOTES:

1. THE DIMENSIONS SHOWN ARE NOMINAL (IN MILLIMETERS), U.N.O.
2. WELD SIZESHALL BE AISC MINIMUM OF 6 mm UNLESS NOTED OTHERWISE.
3. ALL FIELD WELDS SHALL BE INSPECTED PER QUALITY ASSURANCE AND SPECIAL INSPECTIONS.

REFERENCE DRAWINGS

1	93M-BOA-NAT-LOT-04833
2	93M-BOA-NAT-LOT-09170
3	93M-BOA-NAT-LOT-01976
4	93M-BOA-NAT-LOT-20021
5	
6	
7	
8	
9	

6TH OF OCTOBER CITY RAIL TRANSIT MONORAIL

The Authority | Consultant: Hill International | Main Contractor | Structural Designer

KEY PLAN:

SCALE	SHOP DRAWING	DATE
AS SHOWN		12/05/2023

REV	DATE	DSN	CHK	APP	AMENDMENTS DESCRIPTION	STATUS
B	12/05/2023	M.KH	M.KH	DR.M.M	ISSUED FOR INFORMATION	IFI

DRAWING TITLE

6TH OF OCTOBER MONORAIL SERVICE WALKWAYS ZONE (1008)
Z8-BR019

Project Code	Rubric	Initiator	Lot	Ref	Number	Revision
9 3 M	0 4 7 6	A C C	6 0 D E P	D W G	0 8 7 0 4	B

Tekla structures

approval is subject to approval of coordination package between multi-discipline

REVIEWED WITH COMMENT MONORAILS PROJECT

All holes are 22mm U.N.O Length & Area & Weight per piece						
Z8-BR018	L60*6	S235JR	2	1503.7	0.36	8.1
Mark	Profile	Grade	QTY	Length	Area	Weight

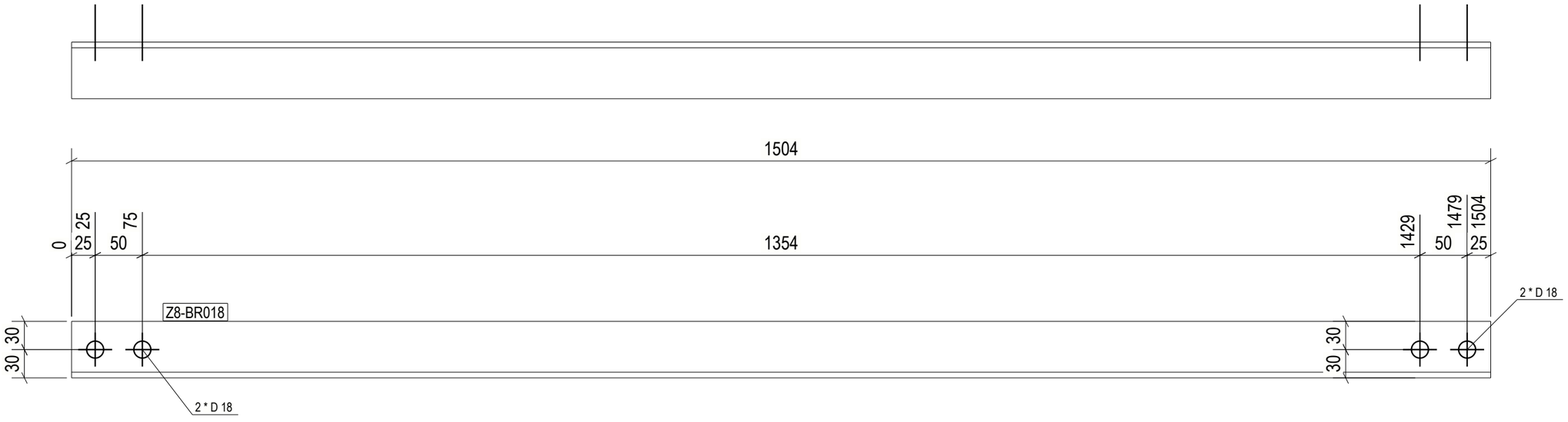

2 REQ'D AS DRAWN MK'D Z8-BR018

6 October Monorail Engineering Unit Valid For Construction

GENERAL NOTES:

1. THE DIMENSIONS SHOWN ARE NOMINAL (IN MILLIMETERS), U.N.O.
2. WELD SIZESHALL BE AISC MINIMUM OF 6 mm UNLESS NOTED OTHERWISE.
3. ALL FIELD WELDS SHALL BE INSPECTED PER QUALITY ASSURANCE AND SPECIAL INSPECTIONS.

REFERENCE DRAWINGS

1	93M-BOA-NAT-LOT-04833
2	93M-BOA-NAT-LOT-09170
3	93M-BOA-NAT-LOT-01976
4	93M-BOA-NAT-LOT-20021
5	
6	
7	
8	
9	

6TH OF OCTOBER CITY RAIL TRANSIT MONORAIL

The Authority | Hill International Consultant | ORASCOM BOMBARDIER Main Contractor | INNOVA Structural Designer

KEY PLAN:

SCALE	SHOP DRAWING	DATE
AS SHOWN		12/05/2023

REV	DATE	DSG	CHK	APP	AMENDMENTS	STATUS
B	12/05/2023	M.KH	M.KH	DR.M.M	ISSUED FOR INFORMATION	IFI

DRAWING TITLE

6TH OF OCTOBER MONORAIL SERVICE WALKWAYS ZONE (1008)

Z8-BR018

Project Code	Rubric	Initiator	Lot	Ref	Number	Revision
93M	0476	ACC	60DEP	DWG	08705	B

Tekla structures

approval is subject to approval of coordination package between multi-discipline

REVIEWED WITH COMMENT
MONORAILS PROJECT

All holes are 22mm U.N.O Length & Area & Weight per piece						
Z8-BR017	L60*6	S235JR	2	1503.6	0.36	8.1
Mark	Profile	Grade	QTY	Length	Area	Weight

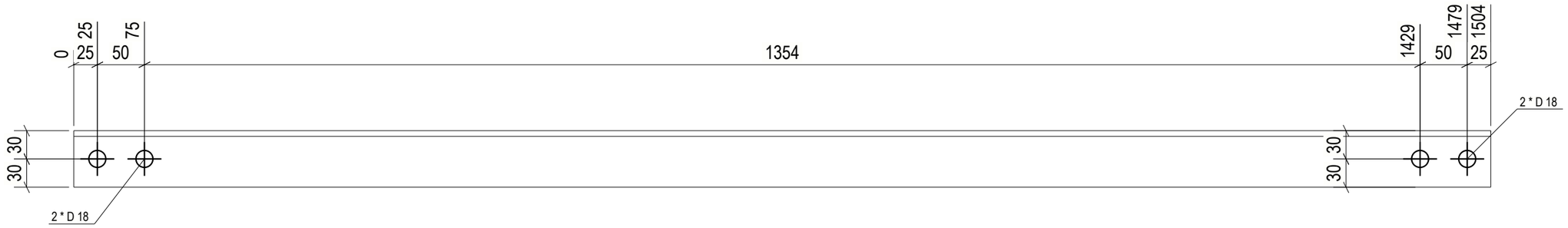

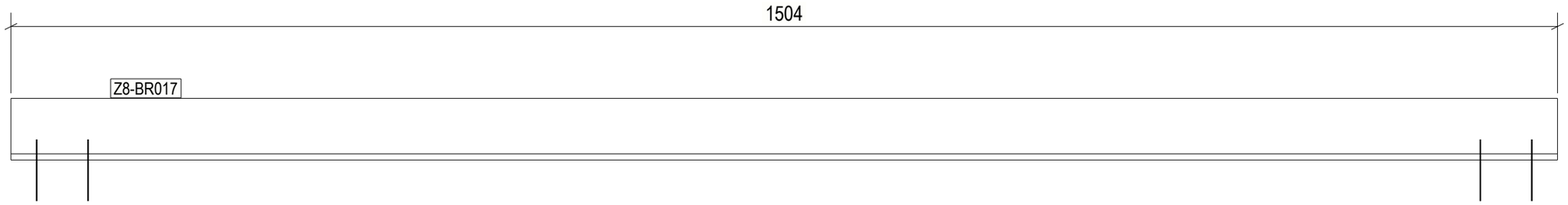

2 REQ'D AS DRAWN MK'D Z8-BR017

6 October Monorail
Engineering Unit
Valid For Construction

GENERAL NOTES:

1. THE DIMENSIONS SHOWN ARE NOMINAL (IN MILLIMETERS), U.N.O.
2. WELD SIZESHALL BE AISC MINIMUM OF 6 mm UNLESS NOTED OTHERWISE.
3. ALL FIELD WELDS SHALL BE INSPECTED PER QUALITY ASSURANCE AND SPECIAL INSPECTIONS.

REFERENCE DRAWINGS

1	93M-BOA-NAT-LOT-04833
2	93M-BOA-NAT-LOT-09170
3	93M-BOA-NAT-LOT-01976
4	93M-BOA-NAT-LOT-20021
5	
6	
7	
8	
9	

6TH OF OCTOBER CITY RAIL TRANSIT MONORAIL

The Authority | Hill International Consultant | Main Contractor | Structural Designer

KEY PLAN:

SCALE: AS SHOWN | SHOP DRAWING | DATE: 12/05/2023

REV	DATE	DRN	CHK	APP	AMENDMENTS DESCRIPTION	STATUS
B	12/05/2023	M.KH	M.KH	DR.M.M	ISSUED FOR INFORMATION	IFI

DRAWING TITLE

6TH OF OCTOBER MONORAIL SERVICE WALKWAYS ZONE (1008)
Z8-BR017

Project Code	Rubric	Initiator	Lot	Ref	Number	Revision
93	M047	6ACC	60DE	P	DWG0876	B

Tekla structures

approval is subject to approval of coordination package between multi-discipline

REVIEWED WITH COMMENT
MONORAILS PROJECT

All holes are 22mm U.N.O Length & Area & Weight per piece						
Z8-BR016	L60*6	S235JR	2	1503.7	0.36	8.1
Mark	Profile	Grade	QTY	Length	Area	Weight

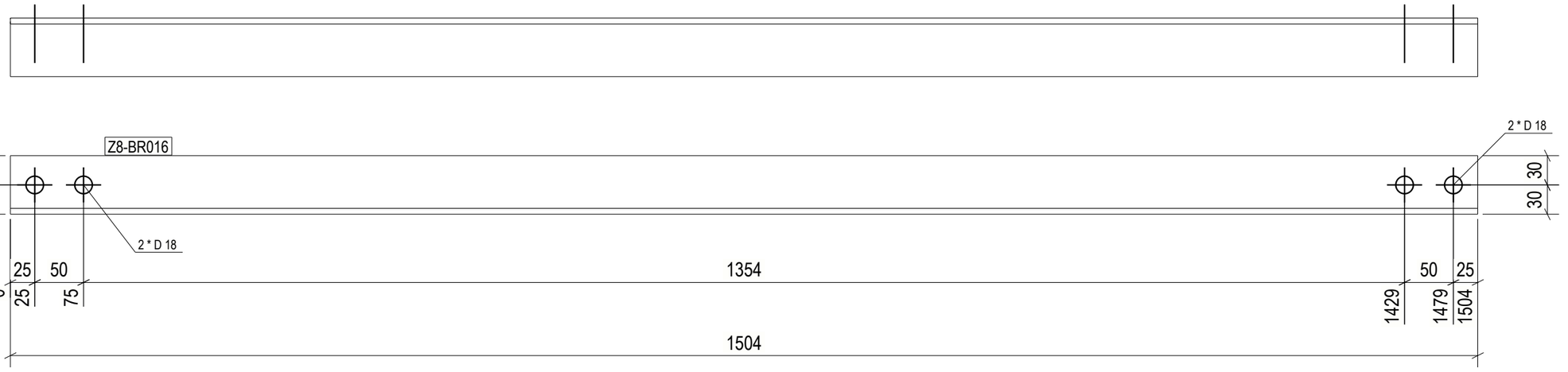

2 REQ'D AS DRAWN MK'D Z8-BR016

6 October Monorail
Engineering Unit
Valid For Construction

GENERAL NOTES:

1. THE DIMENSIONS SHOWN ARE NOMINAL (IN MILLIMETERS), U.N.O.
2. WELD SIZESHALL BE AISC MINIMUM OF 6 mm UNLESS NOTED OTHERWISE.
3. ALL FIELD WELDS SHALL BE INSPECTED PER QUALITY ASSURANCE AND SPECIAL INSPECTIONS.

REFERENCE DRAWINGS

1	93M-BOA-NAT-LOT-04833
2	93M-BOA-NAT-LOT-09170
3	93M-BOA-NAT-LOT-01976
4	93M-BOA-NAT-LOT-20021
5	
6	
7	
8	
9	

6TH OF OCTOBER CITY RAIL TRANSIT MONORAIL

The Authority — Hill International Consultant — Main Contractor — Structural Designer

KEY PLAN:

SCALE	SHOP DRAWING	DATE
AS SHOWN		12/05/2023

REV	DATE	DSN	CHK	APP	AMENDMENTS	STATUS
B	12/05/2023	M.KH	M.KH	DR.M.M	ISSUED FOR INFORMATION	IFI

DRAWING TITLE
6TH OF OCTOBER MONORAIL
SERVICE WALKWAYS
ZONE (1008)
Z8-BR016

Project Code	Rubric	Initiator	Lot	Ref	Number	Revision
9 3 M	0 4 7 6	A C C	6 0 D E P	D W G	0 8 7 0 7	B

Tekla structures

approval is subject to approval of coordination package between multi-discipline

REVIEWED WITH COMMENT
MONORAILS PROJECT

All holes are 22mm U.N.O Length & Area & Weight per piece

Mark	Profile	Grade	QTY	Length	Area	Weight
Z8-BR015	L60*6	S235JR	2	1503.6	0.36	8.1

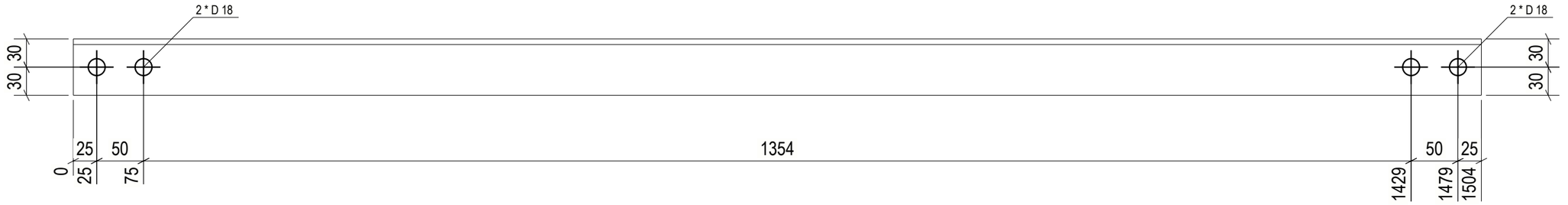

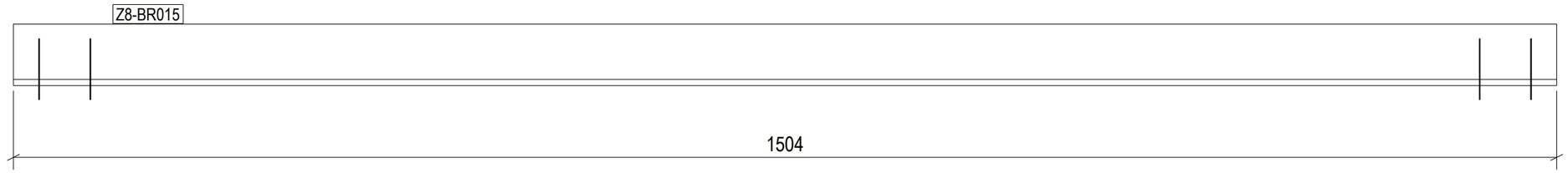

2 REQ'D AS DRAWN MK'D Z8-BR015

6 October Monorail
Engineering Unit
Valid For Construction

GENERAL NOTES:

1. THE DIMENSIONS SHOWN ARE NOMINAL (IN MILLIMETERS), U.N.O.
2. WELD SIZESHALL BE AISC MINIMUM OF 6 mm UNLESS NOTED OTHERWISE.
3. ALL FIELD WELDS SHALL BE INSPECTED PER QUALITY ASSURANCE AND SPECIAL INSPECTIONS.

REFERENCE DRAWINGS

1	93M-BOA-NAT-LOT-04833
2	93M-BOA-NAT-LOT-09170
3	93M-BOA-NAT-LOT-01976
4	93M-BOA-NAT-LOT-20021
5	
6	
7	
8	
9	

6TH OF OCTOBER CITY RAIL TRANSIT MONORAIL

The Authority — Hill International (Consultant) — Main Contractor — Structural Designer

KEY PLAN:

SCALE	SHOP DRAWING	DATE
AS SHOWN		12/05/2023

REV	DATE	DSN	CHK	APP	AMENDMENTS DESCRIPTION	STATUS
B	12/05/2023	M.KH	M.KH	DR.M.M	ISSUED FOR INFORMATION	IFI

DRAWING TITLE

6TH OF OCTOBER MONORAIL SERVICE WALKWAYS ZONE (1008)
Z8-BR015

Project Code	Rubric	Initiator	Lot	Ref	Number	Revision
9 3 M	0 4 7 6	A C C	6 0 D E P	D W G	0 8 7 0 8	B

Tekla structures

approval is subject to approval of coordination package between multi-discipline

REVIEWED WITH COMMENT MONORAILS PROJECT

All holes are 22mm U.N.O Length & Area & Weight per piece						
Z8-BR014	L60*6	S235JR	2	1303.7	0.31	7.0
Mark	Profile	Grade	QTY	Length	Area	Weight

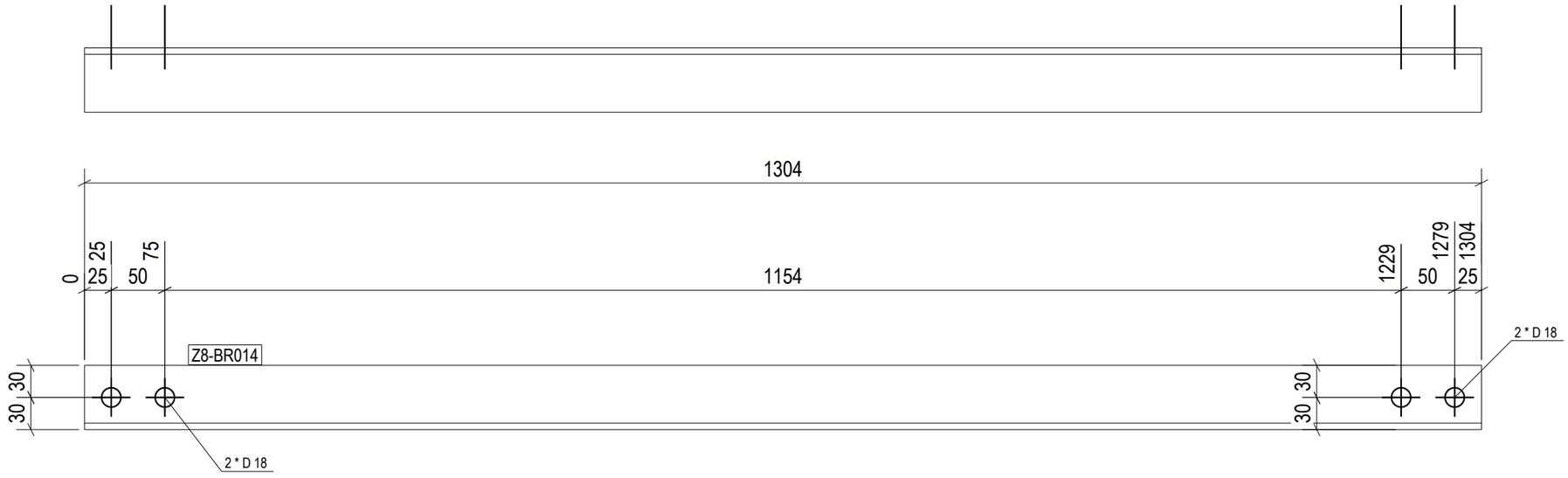

2 REQ'D AS DRAWN MK'D Z8-BR014

6 October Monorail Engineering Unit Valid For Construction

GENERAL NOTES:

1. THE DIMENSIONS SHOWN ARE NOMINAL (IN MILLIMETERS), U.N.O.
2. WELD SIZESHALL BE AISC MINIMUM OF 6 mm UNLESS NOTED OTHERWISE.
3. ALL FIELD WELDS SHALL BE INSPECTED PER QUALITY ASSURANCE AND SPECIAL INSPECTIONS.

REFERENCE DRAWINGS

1	93M-BOA-NAT-LOT-04833
2	93M-BOA-NAT-LOT-09170
3	93M-BOA-NAT-LOT-01976
4	93M-BOA-NAT-LOT-20021
5	
6	
7	
8	
9	

6TH OF OCTOBER CITY RAIL TRANSIT MONORAIL

The Authority | Hill International Consultant | ORASCOM BOMBARDIER Main Contractor | INNOVA Structural Designer

KEY PLAN:

SCALE	SHOP DRAWING	DATE
AS SHOWN		12/05/2023

REV	DATE	DSG	CHK	APP	AMENDMENTS	STATUS
B	12/05/2023	M.KH	M.KH	DR.M.M	ISSUED FOR INFORMATION	IFI

DRAWING TITLE

6TH OF OCTOBER MONORAIL SERVICE WALKWAYS ZONE (1008)

Z8-BR014

Project Code	Rubric	Initiator	Lot	Ref	Number	Revision
93M	0476	ACC	60DEP	DWG	08709	B

Tekla structures

approval is subject to approval of coordination package between multi-discipline

REVIEWED WITH COMMENT MONORAILS PROJECT

All holes are 22mm U.N.O Length & Area & Weight per piece						
Z8-BR013	L60*6	S235JR	2	1303.9	0.31	7.0
Mark	Profile	Grade	QTY	Length	Area	Weight

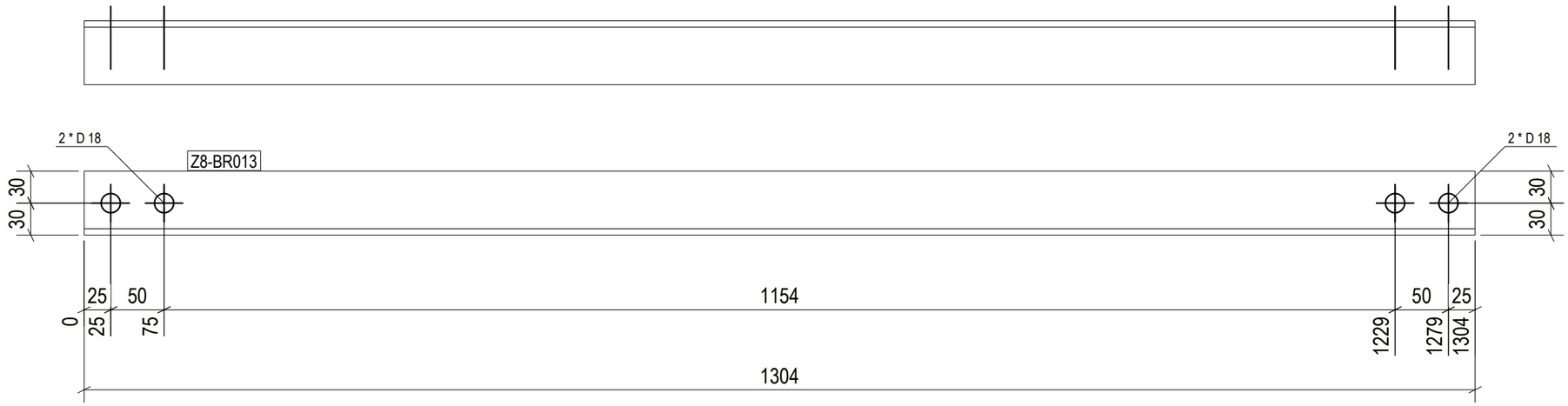

2 REQ'D AS DRAWN MK'D Z8-BR013

6 October Monorail Engineering Unit Valid For Construction

GENERAL NOTES:

1. THE DIMENSIONS SHOWN ARE NOMINAL (IN MILLIMETERS), U.N.O.
2. WELD SIZESHALL BE AISC MINIMUM OF 6 mm UNLESS NOTED OTHERWISE.
3. ALL FIELD WELDS SHALL BE INSPECTED PER QUALITY ASSURANCE AND SPECIAL INSPECTIONS.

REFERENCE DRAWINGS

1	93M-BOA-NAT-LOT-04833
2	93M-BOA-NAT-LOT-09170
3	93M-BOA-NAT-LOT-01976
4	93M-BOA-NAT-LOT-20021
5	
6	
7	
8	
9	

6TH OF OCTOBER CITY RAIL TRANSIT MONORAIL

The Authority | Hill International Consultant | ORASCOM BOMBARDIER Main Contractor | INNOVA Structural Designer

KEY PLAN:

SCALE	SHOP DRAWING	DATE
AS SHOWN		12/05/2023

REV	DATE	DSG	CHK	APP	AMENDMENTS	STATUS
B	12/05/2023	M.KH	M.KH	DR.M.M	ISSUED FOR INFORMATION	IFI

DRAWING TITLE

6TH OF OCTOBER MONORAIL SERVICE WALKWAYS ZONE (1008)

Z8-BR013

Project Code	Rubric	Initiator	Lot	Ref	Number	Revision
93M	0476	ACC	60DEP	DWG	08710	B

Tekla structures

approval is subject to approval of coordination package between multi-discipline

REVIEWED WITH COMMENT
MONORAILS PROJECT

All holes are 22mm U.N.O Length & Area & Weight per piece						
Z8-BR012	L60*6	S235JR	2	1330.6	0.32	7.1
Mark	Profile	Grade	QTY	Length	Area	Weight

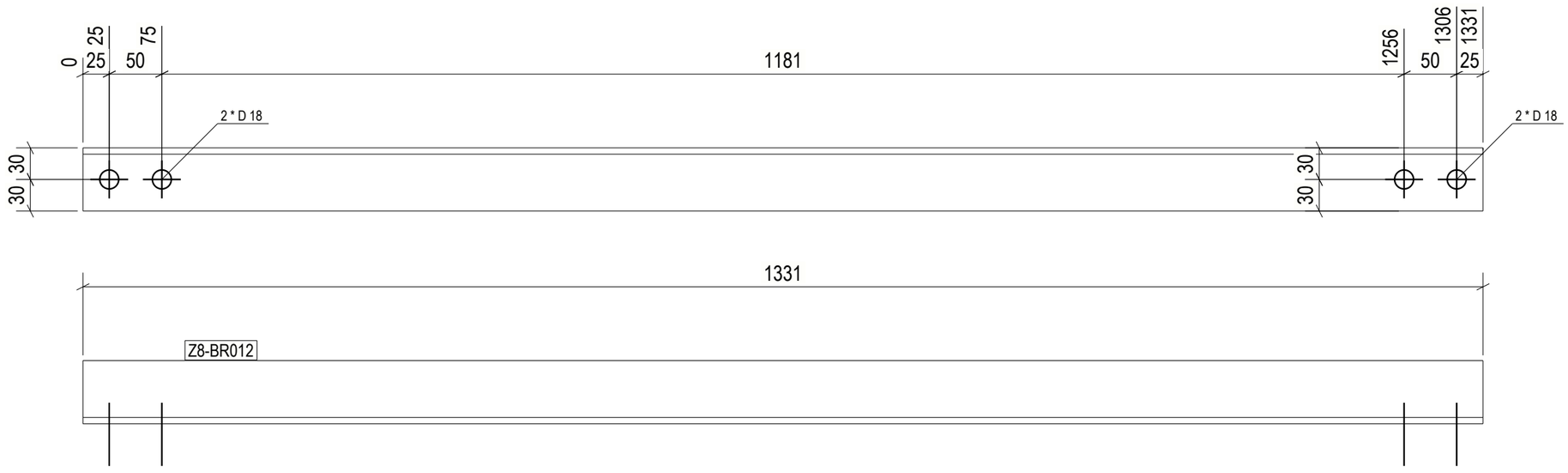

2 REQ'D AS DRAWN MK'D Z8-BR012

GENERAL NOTES:

1. THE DIMENSIONS SHOWN ARE NOMINAL (IN MILLIMETERS), U.N.O.
2. WELD SIZESHALL BE AISC MINIMUM OF 6 mm UNLESS NOTED OTHERWISE.
3. ALL FIELD WELDS SHALL BE INSPECTED PER QUALITY ASSURANCE AND SPECIAL INSPECTIONS.

REFERENCE DRAWINGS

1	93M-BOA-NAT-LOT-04833
2	93M-BOA-NAT-LOT-09170
3	93M-BOA-NAT-LOT-01976
4	93M-BOA-NAT-LOT-20021
5	
6	
7	
8	
9	

6TH OF OCTOBER CITY RAIL TRANSIT MONORAIL

The Authority | Hill International Consultant | Main Contractor | Structural Designer

KEY PLAN:

6 October Monorail
Engineering Unit
Valid For Construction

SCALE	SHOP DRAWING	DATE
AS SHOWN		12/05/2023

REV	DATE	DRN	CHK	APP	AMENDMENTS	STATUS
B	12/05/2023	M.KH	M.KH	DR.M.M	ISSUED FOR INFORMATION	IFI

DRAWING TITLE

6TH OF OCTOBER MONORAIL SERVICE WALKWAYS ZONE (1008)
Z8-BR012

Project Code	Rubric	Initiator	Lot	Ref	Number	Revision
9 3	M 0 4 7 6	A C C	6 0 D E P	D W G	0 8 7 1 1	B

Tekla structures

approval is subject to approval of coordination package between multi-discipline

REVIEWED WITH COMMENT
MONORAILS PROJECT

All holes are 22mm U.N.O Length & Area & Weight per piece						
Z8-BR011	L60*6	S235JR	2	1330.8	0.32	7.1
Mark	Profile	Grade	QTY	Length	Area	Weight

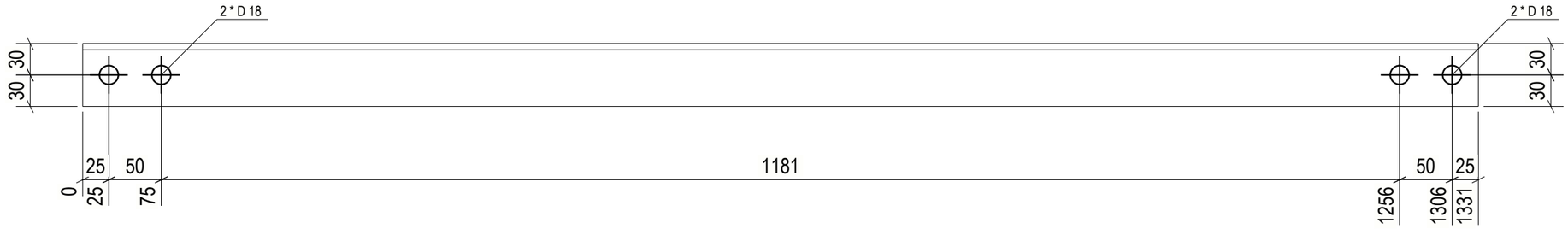

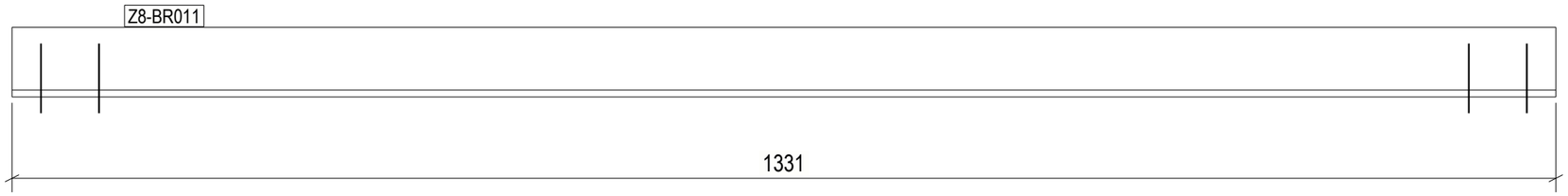

2 REQ'D AS DRAWN MK'D Z8-BR011

GENERAL NOTES:

1. THE DIMENSIONS SHOWN ARE NOMINAL (IN MILLIMETERS), U.N.O.
2. WELD SIZESHALL BE AISC MINIMUM OF 6 mm UNLESS NOTED OTHERWISE.
3. ALL FIELD WELDS SHALL BE INSPECTED PER QUALITY ASSURANCE AND SPECIAL INSPECTIONS.

REFERENCE DRAWINGS

1	93M-BOA-NAT-LOT-04833
2	93M-BOA-NAT-LOT-09170
3	93M-BOA-NAT-LOT-01976
4	93M-BOA-NAT-LOT-20021
5	
6	
7	
8	
9	

6TH OF OCTOBER CITY RAIL TRANSIT MONORAIL

The Authority | Hill International Consultant | Main Contractor | Structural Designer

KEY PLAN:

6 October Monorail Engineering Unit Valid For Construction

SCALE	SHOP DRAWING	DATE
AS SHOWN		12/05/2023

REV	DATE	DSN	CHK	APP	AMENDMENTS DESCRIPTION	STATUS
B	12/05/2023	M.KH	M.KH	DR.M.M	ISSUED FOR INFORMATION	IFI

DRAWING TITLE

6TH OF OCTOBER MONORAIL SERVICE WALKWAYS ZONE (1008)
Z8-BR011

Project Code	Rubric	Initiator	Lot	Ref	Number	Revision
9 3 M	0 4 7 6	A C C	6 0 D E P	D W G	0 8 7 1 2	B

Tekla structures

approval is subject to approval of coordination package between multi-discipline

REVIEWED WITH COMMENT
MONORAILS PROJECT

All holes are 22mm U.N.O Length & Area & Weight per piece

Mark	Profile	Grade	QTY	Length	Area	Weight
Z8-BR010	L80*8	S235JR	1	3488.1	1.12	33.3

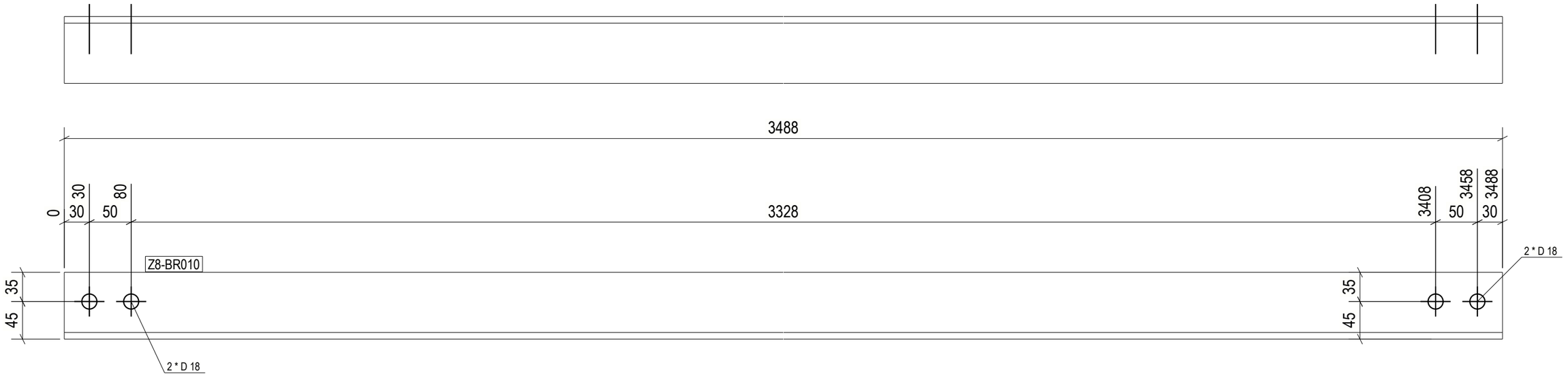

1 REQ'D AS DRAWN MK'D Z8-BR010

GENERAL NOTES:

1. THE DIMENSIONS SHOWN ARE NOMINAL (IN MILLIMETERS), U.N.O.
2. WELD SIZESHALL BE AISC MINIMUM OF 6 mm UNLESS NOTED OTHERWISE.
3. ALL FIELD WELDS SHALL BE INSPECTED PER QUALITY ASSURANCE AND SPECIAL INSPECTIONS.

REFERENCE DRAWINGS

1	93M-BOA-NAT-LOT-04833
2	93M-BOA-NAT-LOT-09170
3	93M-BOA-NAT-LOT-01976
4	93M-BOA-NAT-LOT-20021
5	
6	
7	
8	
9	

6TH OF OCTOBER CITY RAIL TRANSIT MONORAIL

The Authority | Hill International Consultant | Main Contractor | Structural Designer

KEY PLAN:

6 October Monorail Engineering Unit
Valid For Construction

SCALE	SHOP DRAWING	DATE
AS SHOWN		12/05/2023

REV	DATE	DRN	CHK	APP	AMENDMENT	STATUS
B	12/05/2023	M.KH	M.KH	DR.M.M	ISSUED FOR INFORMATION	IFI

DRAWING TITLE

6TH OF OCTOBER MONORAIL
SERVICE WALKWAYS
ZONE (1008)
Z8-BR010

Project Code	Rubric	Initiator	Lot	Ref	Number	Revision
9 3	M 0 4 7 6	A C C	6 0 D E P	D W G	0 8 7 1 3	B

Tekla structures

approval is subject to approval of coordination package between multi-discipline

REVIEWED WITH COMMENT
MONORAILS PROJECT

All holes are 22mm U.N.O Length & Area & Weight per piece

Mark	Profile	Grade	QTY	Length	Area	Weight
Z8-BR009	L80*8	S235JR	3	3487.7	1.12	33.3

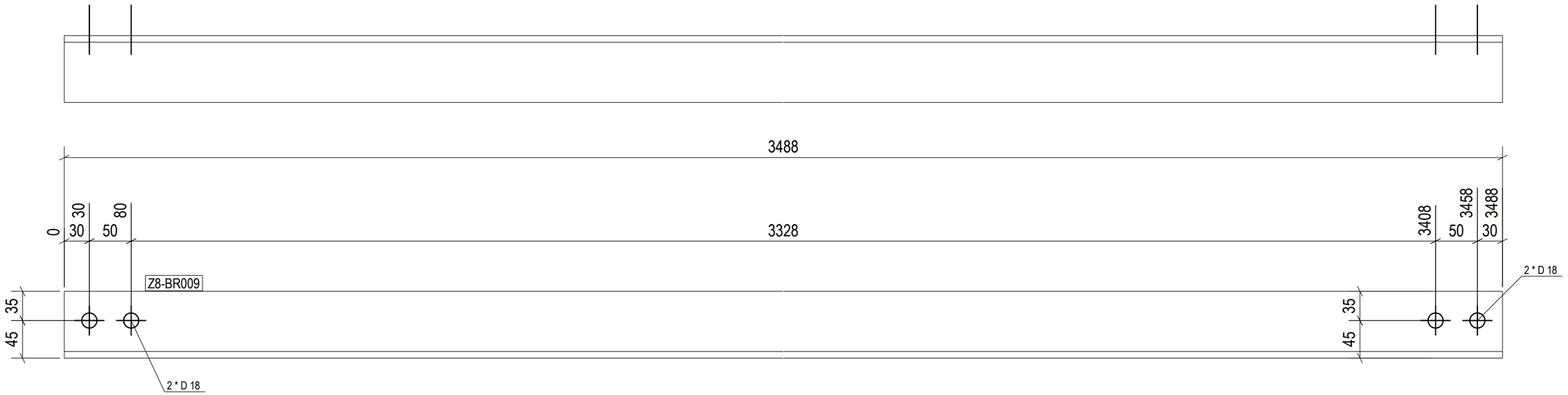

3 REQ'D AS DRAWN MK'D Z8-BR009

GENERAL NOTES:

1. THE DIMENSIONS SHOWN ARE NOMINAL (IN MILLIMETERS), U.N.O.
2. WELD SIZESHALL BE AISC MINIMUM OF 6 mm UNLESS NOTED OTHERWISE.
3. ALL FIELD WELDS SHALL BE INSPECTED PER QUALITY ASSURANCE AND SPECIAL INSPECTIONS.

REFERENCE DRAWINGS

1	93M-BOA-NAT-LOT-04833
2	93M-BOA-NAT-LOT-09170
3	93M-BOA-NAT-LOT-01976
4	93M-BOA-NAT-LOT-20021
5	
6	
7	
8	
9	

6TH OF OCTOBER CITY RAIL TRANSIT MONORAIL

The Authority | Consultant: Hill International | Main Contractor: ORASCOM CONSTRUCTION, BOMBARDIER | Structural Designer: INNOVA

KEY PLAN:

6 October Monorail
Engineering Unit
Valid For Construction

SCALE	SHOP DRAWING	DATE
AS SHOWN		12/05/2023

REV	DATE	DRN	CHK	APP	AMENDMENTS	STATUS
B	12/05/2023	M.KH	M.KH	DR.M.M	ISSUED FOR INFORMATION	IFI

DRAWING TITLE

6TH OF OCTOBER MONORAIL
SERVICE WALKWAYS
ZONE (1008)
Z8-BR009

Project Code	Rubric	Initiator	Lot	Ref	Number	Revision
93	M047	ACC60	DEP	DWG	0871	B

Tekla structures

approval is subject to approval of coordination package between multi-discipline

REVIEWED WITH COMMENT
MONORAILS PROJECT

All holes are 22mm U.N.O Length & Area & Weight per piece						
Z8-BR008	L80*8	S235JR	2	3490.6	1.12	33.3
Mark	Profile	Grade	QTY	Length	Area	Weight

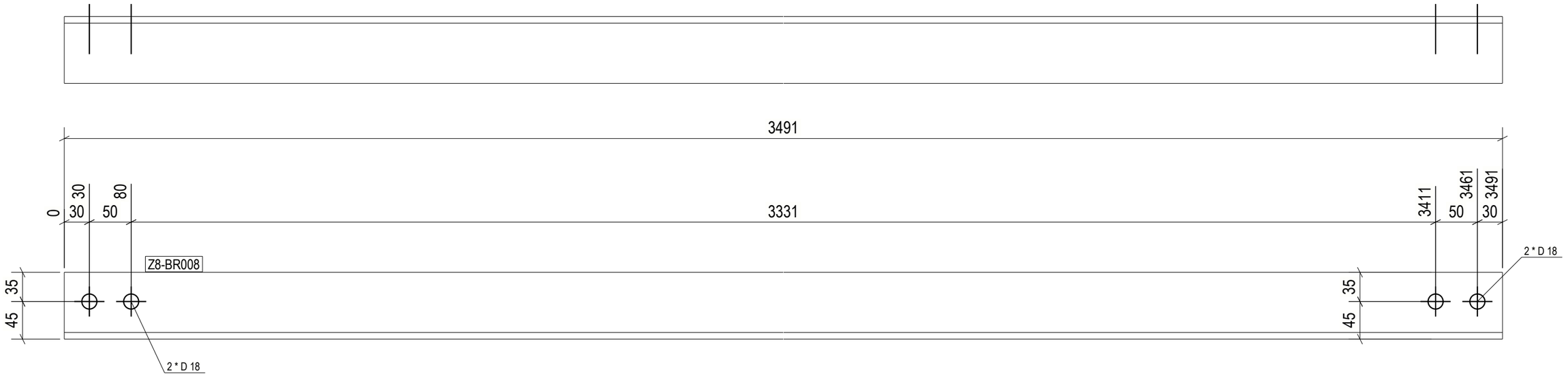

2 REQ'D AS DRAWN MK'D Z8-BR008

GENERAL NOTES:

1. THE DIMENSIONS SHOWN ARE NOMINAL (IN MILLIMETERS), U.N.O.
2. WELD SIZESHALL BE AISC MINIMUM OF 6 mm UNLESS NOTED OTHERWISE.
3. ALL FIELD WELDS SHALL BE INSPECTED PER QUALITY ASSURANCE AND SPECIAL INSPECTIONS.

REFERENCE DRAWINGS

1	93M-BOA-NAT-LOT-04833
2	93M-BOA-NAT-LOT-09170
3	93M-BOA-NAT-LOT-01976
4	93M-BOA-NAT-LOT-20021
5	
6	
7	
8	
9	

6TH OF OCTOBER CITY RAIL TRANSIT MONORAIL

The Authority | Consultant: Hill International | Main Contractor: Orascom Construction / Bombardier | Structural Designer: Innova

KEY PLAN:

6 October Monorail Engineering Unit
Valid For Construction

SCALE	SHOP DRAWING	DATE
AS SHOWN		12/05/2023

REV	DATE	DRN	CHK	APP	AMENDMENTS	STATUS
B	12/05/2023	M.KH	M.KH	DR.M.M	ISSUED FOR INFORMATION	IFI

DRAWING TITLE
6TH OF OCTOBER MONORAIL
SERVICE WALKWAYS
ZONE (1008)
Z8-BR008

Project Code	Rubric	Initiator	Lot	Ref	Number	Revision
93	M04	76	ACC60	DEP	DWG	0871	B

Tekla structures

approval is subject to approval of coordination package between multi-discipline

REVIEWED WITH COMMENT MONORAILS PROJECT

All holes are 22mm U.N.O Length & Area & Weight per piece						
Z8-BR007	L80*8	S235JR	1	3084.2	0.99	29.4
Mark	Profile	Grade	QTY	Length	Area	Weight

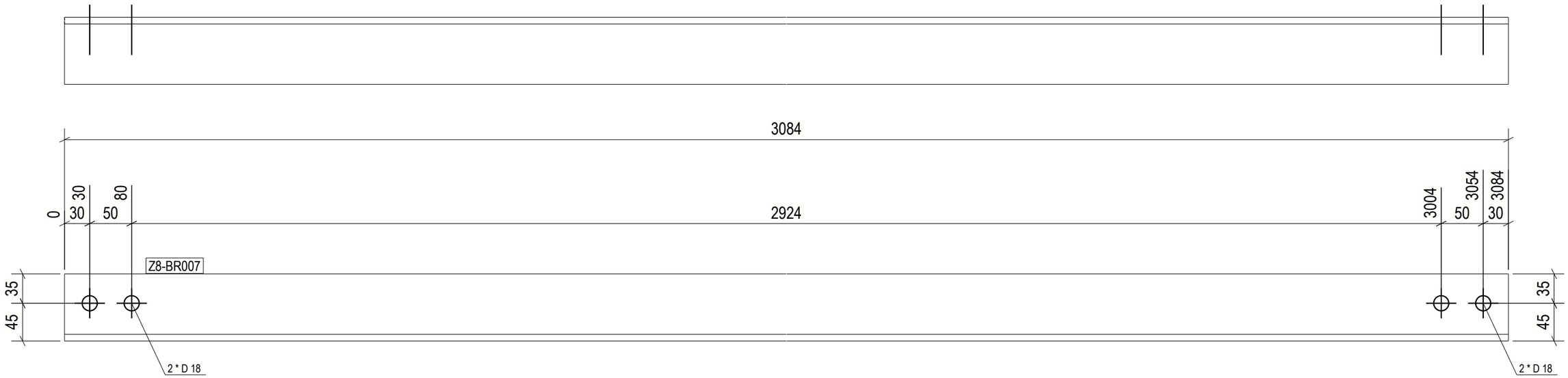

1 REQ'D AS DRAWN MK'D Z8-BR007

6 October Monorail Engineering Unit
Valid For Construction

GENERAL NOTES:

1. THE DIMENSIONS SHOWN ARE NOMINAL (IN MILLIMETERS), U.N.O.
2. WELD SIZESHALL BE AISC MINIMUM OF 6 mm UNLESS NOTED OTHERWISE.
3. ALL FIELD WELDS SHALL BE INSPECTED PER QUALITY ASSURANCE AND SPECIAL INSPECTIONS.

REFERENCE DRAWINGS

1	93M-BOA-NAT-LOT-04833
2	93M-BOA-NAT-LOT-09170
3	93M-BOA-NAT-LOT-01976
4	93M-BOA-NAT-LOT-20021
5	
6	
7	
8	
9	

6TH OF OCTOBER CITY RAIL TRANSIT MONORAIL

The Authority | Hill International Consultant | ORASCOM BOMBARDIER Main Contractor | INNOVA Structural Designer

KEY PLAN:

SCALE	SHOP DRAWING	DATE
AS SHOWN		12/05/2023

REV	DATE	DSN	CHK	APP	AMENDMENTS	STATUS
B	12/05/2023	M.KH	M.KH	DR.M.M	ISSUED FOR INFORMATION	IFI

DRAWING TITLE

6TH OF OCTOBER MONORAIL SERVICE WALKWAYS ZONE (1008)
Z8-BR007

Project Code	Rubric	Initiator	Lot	Ref	Number	Revision
93M	0476	ACC	60DEP	DWG	08716	B

Tekla structures

approval is subject to approval of coordination package between multi-discipline

REVIEWED WITH COMMENT MONORAILS PROJECT

All holes are 22mm U.N.O Length & Area & Weight per piece						
Z8-BR006	L80*8	S235JR	1	3084.6	0.99	29.4
Mark	Profile	Grade	QTY	Length	Area	Weight

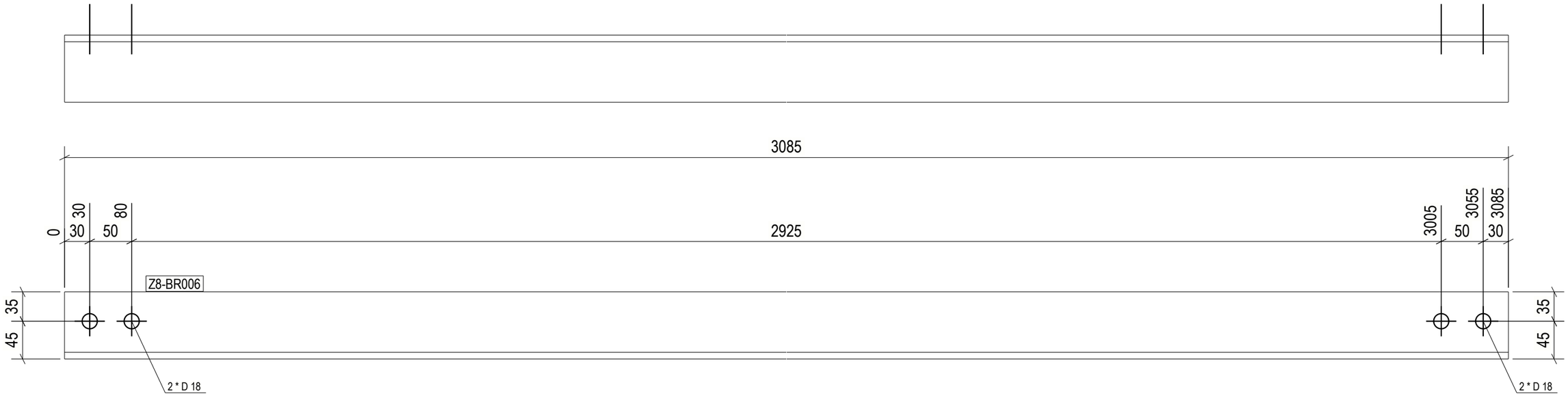

1 REQ'D AS DRAWN MK'D Z8-BR006

6 October Monorail Engineering Unit
Valid For Construction

GENERAL NOTES:

1. THE DIMENSIONS SHOWN ARE NOMINAL (IN MILLIMETERS), U.N.O.
2. WELD SIZESHALL BE AISC MINIMUM OF 6 mm UNLESS NOTED OTHERWISE.
3. ALL FIELD WELDS SHALL BE INSPECTED PER QUALITY ASSURANCE AND SPECIAL INSPECTIONS.

REFERENCE DRAWINGS

1	93M-BOA-NAT-LOT-04833
2	93M-BOA-NAT-LOT-09170
3	93M-BOA-NAT-LOT-01976
4	93M-BOA-NAT-LOT-20021
5	
6	
7	
8	
9	

6TH OF OCTOBER CITY RAIL TRANSIT MONORAIL

The Authority | Hill International Consultant | ORASCOM BOMBARDIER Main Contractor | INNOVA Structural Designer

KEY PLAN:

SCALE	SHOP DRAWING	DATE
AS SHOWN		12/05/2023

REV	DATE	DSN	CHK	APP	AMENDMENTS	STATUS
B	12/05/2023	M.KH	M.KH	DR.M.M	ISSUED FOR INFORMATION	IFI

DRAWING TITLE

6TH OF OCTOBER MONORAIL SERVICE WALKWAYS ZONE (1008)
Z8-BR006

Project Code	Rubric	Initiator	Lot	Ref	Number	Revision
93M	0476	ACC	60DEP	DWG	08717	B

Tekla structures

approval is subject to approval of coordination package between multi-discipline

REVIEWED WITH COMMENT
MONORAILS PROJECT

All holes are 22mm U.N.O Length & Area & Weight per piece

Mark	Profile	Grade	QTY	Length	Area	Weight
Z8-BR005	L80*8	S235JR	1	3389.9	1.09	32.4

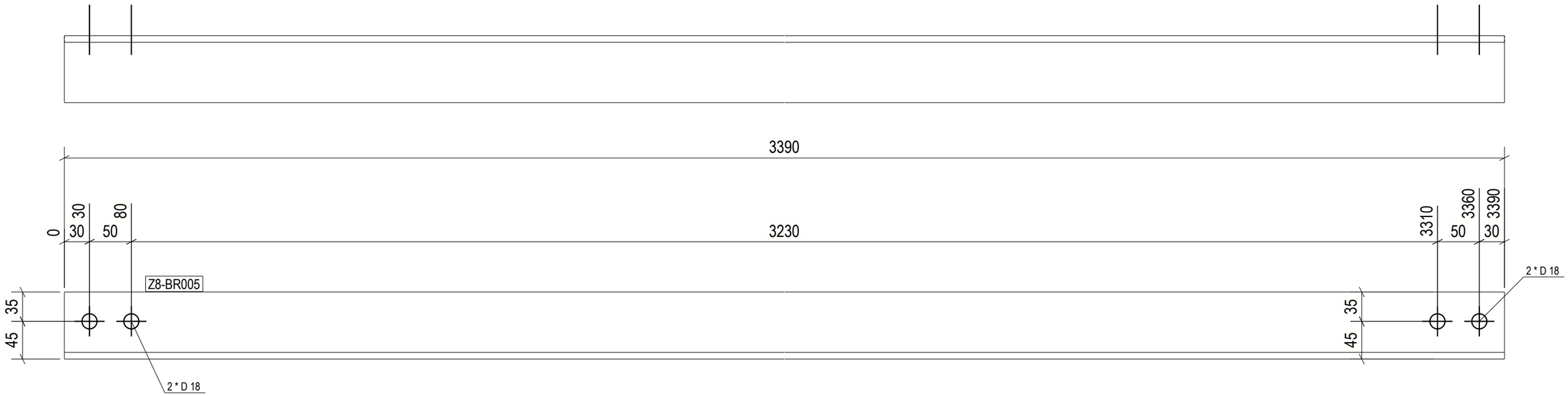

1 REQ'D AS DRAWN MK'D Z8-BR005

GENERAL NOTES:

1. THE DIMENSIONS SHOWN ARE NOMINAL (IN MILLIMETERS), U.N.O.
2. WELD SIZESHALL BE AISC MINIMUM OF 6 mm UNLESS NOTED OTHERWISE.
3. ALL FIELD WELDS SHALL BE INSPECTED PER QUALITY ASSURANCE AND SPECIAL INSPECTIONS.

REFERENCE DRAWINGS

1	93M-BOA-NAT-LOT-04833
2	93M-BOA-NAT-LOT-09170
3	93M-BOA-NAT-LOT-01976
4	93M-BOA-NAT-LOT-20021
5	
6	
7	
8	
9	

6TH OF OCTOBER CITY RAIL TRANSIT MONORAIL

The Authority | Hill International Consultant | Main Contractor | Structural Designer

KEY PLAN:

6 October Monorail Engineering Unit
Valid For Construction

SCALE	SHOP DRAWING	DATE
AS SHOWN		12/05/2023

REV	DATE	DRN	CHK	APP	AMENDMENT DESCRIPTION	STATUS
B	12/05/2023	M.KH	M.KH	DR.M.M	ISSUED FOR INFORMATION	IFI

DRAWING TITLE

6TH OF OCTOBER MONORAIL
SERVICE WALKWAYS
ZONE (1008)
Z8-BR005

Project Code	Rubric	Initiator	Lot	Ref	Number	Revision
93	M047	ACC60	DEP	DWG	0871	B

Tekla structures

approval is subject to approval of coordination package between multi-discipline

REVIEWED WITH COMMENT MONORAILS PROJECT

All holes are 22mm U.N.O Length & Area & Weight per piece						
Z8-BR004	L80*8	S235JR	1	3370.9	1.08	32.2
Mark	Profile	Grade	QTY	Length	Area	Weight

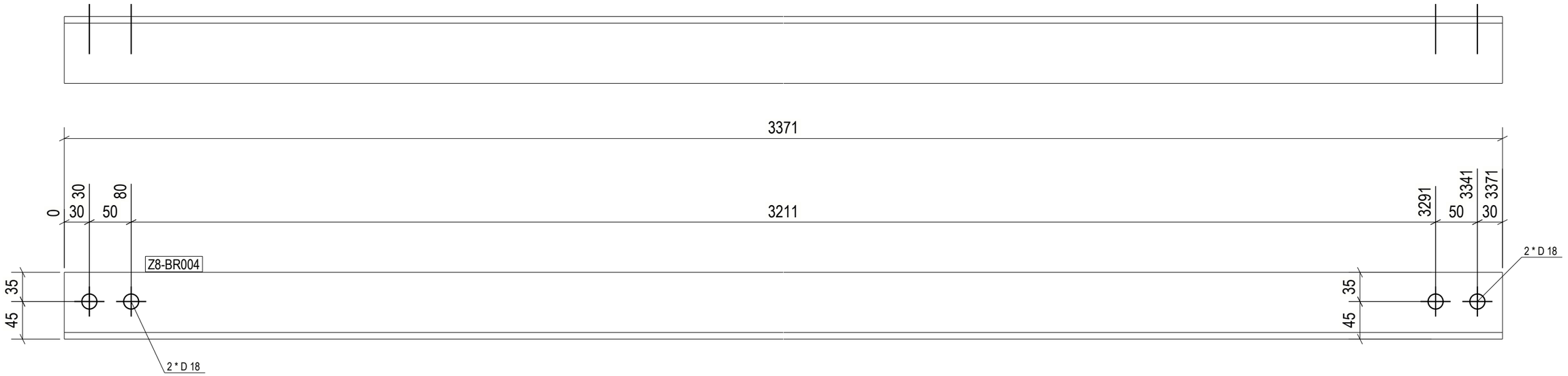

1 REQ'D AS DRAWN MK'D Z8-BR004

6 October Monorail Engineering Unit
Valid For Construction

GENERAL NOTES:

1. THE DIMENSIONS SHOWN ARE NOMINAL (IN MILLIMETERS), U.N.O.
2. WELD SIZESHALL BE AISC MINIMUM OF 6 mm UNLESS NOTED OTHERWISE.
3. ALL FIELD WELDS SHALL BE INSPECTED PER QUALITY ASSURANCE AND SPECIAL INSPECTIONS.

REFERENCE DRAWINGS

1	93M-BOA-NAT-LOT-04833
2	93M-BOA-NAT-LOT-09170
3	93M-BOA-NAT-LOT-01976
4	93M-BOA-NAT-LOT-20021
5	
6	
7	
8	
9	

6TH OF OCTOBER CITY RAIL TRANSIT MONORAIL

The Authority | Hill International Consultant | ORASCOM BOMBARDIER Main Contractor | INNOVA Structural Designer

KEY PLAN:

SCALE	SHOP DRAWING	DATE
AS SHOWN		12/05/2023

REV	DATE	DSN	CHK	APP	AMENDMENTS	STATUS
B	12/05/2023	M.KH	M.KH	DR.M.M	ISSUED FOR INFORMATION	IFI

DRAWING TITLE

6TH OF OCTOBER MONORAIL SERVICE WALKWAYS ZONE (1008)
Z8-BR004

Project Code	Rubric	Initiator	Lot	Ref	Number	Revision
93M	0476	ACC	60DEP	DWG	08719	B

Tekla structures

approval is subject to approval of coordination package between multi-discipline

REVIEWED WITH COMMENT
MONORAILS PROJECT

All holes are 22mm U.N.O Length & Area & Weight per piece						
Z8-BR003	L80*8	S235JR	1	3418.3	1.10	32.6
Mark	Profile	Grade	QTY	Length	Area	Weight

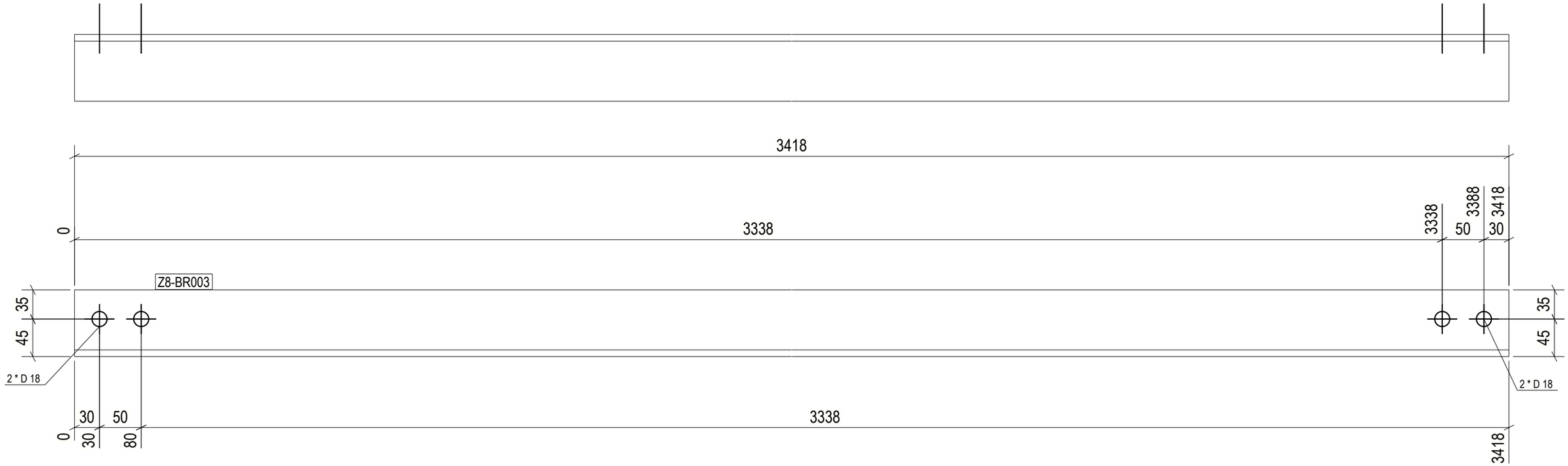

1 REQ'D AS DRAWN MK'D Z8-BR003

GENERAL NOTES:

1. THE DIMENSIONS SHOWN ARE NOMINAL (IN MILLIMETERS), U.N.O.
2. WELD SIZESHALL BE AISC MINIMUM OF 6 mm UNLESS NOTED OTHERWISE.
3. ALL FIELD WELDS SHALL BE INSPECTED PER QUALITY ASSURANCE AND SPECIAL INSPECTIONS.

REFERENCE DRAWINGS

1	93M-BOA-NAT-LOT-04833
2	93M-BOA-NAT-LOT-09170
3	93M-BOA-NAT-LOT-01976
4	93M-BOA-NAT-LOT-20021
5	
6	
7	
8	
9	

6TH OF OCTOBER CITY RAIL TRANSIT MONORAIL

The Authority | Hill International Consultant | Main Contractor | Structural Designer

KEY PLAN:

6 October Monorail Engineering Unit Valid For Construction

SCALE	SHOP DRAWING	DATE
AS SHOWN		12/05/2023

REV	DATE	DSN	CHK	APP	AMENDMENTS DESCRIPTION	STATUS
B	12/05/2023	M.KH	M.KH	DR.M.M	ISSUED FOR INFORMATION	IFI

DRAWING TITLE

6TH OF OCTOBER MONORAIL SERVICE WALKWAYS ZONE (1008)
Z8-BR003

Project Code	Rubric	Initiator	Lot	Ref	Number	Revision
9 3	M 0 4 7 6	A C C	6 0 D E	P D W	G 0 8 7 2 0	B

Tekla structures

approval is subject to approval of coordination package between multi-discipline

REVIEWED WITH COMMENT
MONORAILS PROJECT

All holes are 22mm U.N.O Length & Area & Weight per piece

Mark	Profile	Grade	QTY	Length	Area	Weight
Z8-BR002	L80*8	S235JR	1	3422.2	1.10	32.7

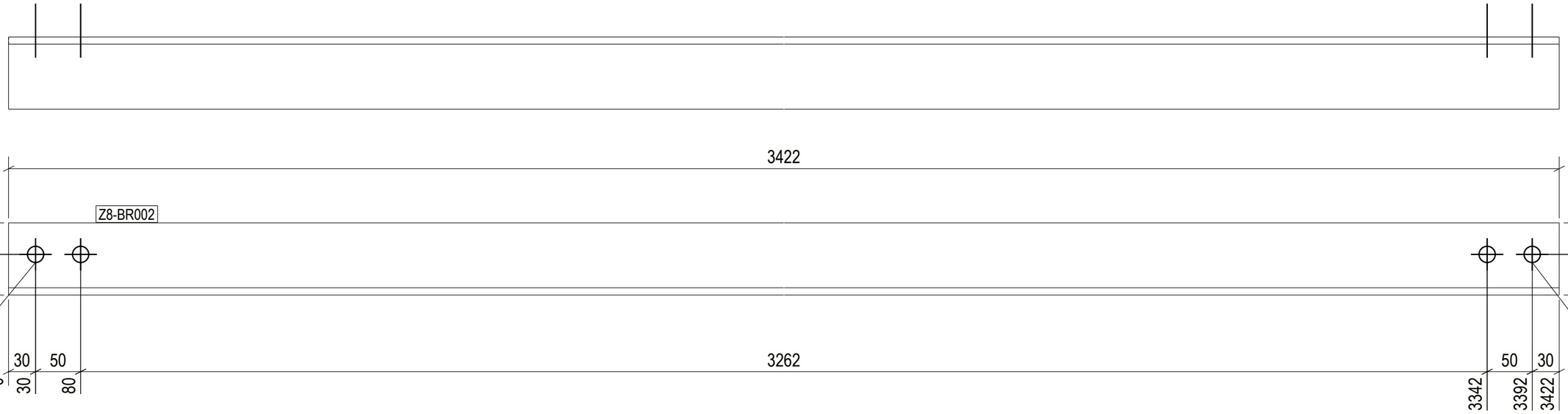

1 REQ'D AS DRAWN MK'D Z8-BR002

GENERAL NOTES:

1. THE DIMENSIONS SHOWN ARE NOMINAL (IN MILLIMETERS), U.N.O.
2. WELD SIZESHALL BE AISC MINIMUM OF 6 mm UNLESS NOTED OTHERWISE.
3. ALL FIELD WELDS SHALL BE INSPECTED PER QUALITY ASSURANCE AND SPECIAL INSPECTIONS.

REFERENCE DRAWINGS

1	93M-BOA-NAT-LOT-04833
2	93M-BOA-NAT-LOT-09170
3	93M-BOA-NAT-LOT-01976
4	93M-BOA-NAT-LOT-20021
5	
6	
7	
8	
9	

6TH OF OCTOBER CITY RAIL TRANSIT MONORAIL

The Authority | Consultant: Hill International | Main Contractor | Structural Designer

KEY PLAN:

6 October Monorail Engineering Unit
Valid For Construction

SCALE	SHOP DRAWING	DATE
AS SHOWN		12/05/2023

REV	DATE	DRN	CHK	APP	AMENDMENT	STATUS
B	12/05/2023	M.KH	M.KH	DR.M.M	ISSUED FOR INFORMATION	IFI

DRAWING TITLE
6TH OF OCTOBER MONORAIL
SERVICE WALKWAYS
ZONE (1008)
Z8-BR002

Project Code	Rubric	Initiator	Lot	Ref	Number	Revision
93	M047	ACC	60DEP	DWG	0872	1 B

Tekla structures

approval is subject to approval of coordination package between multi-discipline

REVIEWED WITH COMMENT
MONORAILS PROJECT

All holes are 22mm U.N.O Length & Area & Weight per piece

Mark	Profile	Grade	QTY	Length	Area	Weight
Z8-BR001	L80*8	S235JR	1	3422.2	1.10	32.7

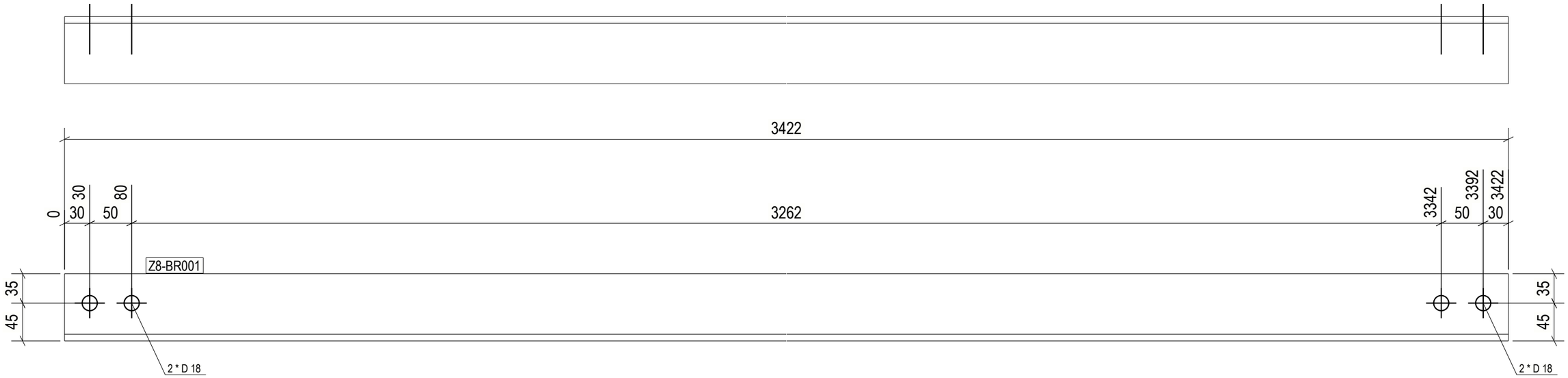

1 REQ'D AS DRAWN MK'D Z8-BR001

GENERAL NOTES:

1. THE DIMENSIONS SHOWN ARE NOMINAL (IN MILLIMETERS), U.N.O.
2. WELD SIZESHALL BE AISC MINIMUM OF 6 mm UNLESS NOTED OTHERWISE.
3. ALL FIELD WELDS SHALL BE INSPECTED PER QUALITY ASSURANCE AND SPECIAL INSPECTIONS.

REFERENCE DRAWINGS

1	93M-BOA-NAT-LOT-04833
2	93M-BOA-NAT-LOT-09170
3	93M-BOA-NAT-LOT-01976
4	93M-BOA-NAT-LOT-20021
5	
6	
7	
8	
9	

6TH OF OCTOBER CITY RAIL TRANSIT MONORAIL

The Authority | Consultant: Hill International | Main Contractor: Orascom Construction / Bombardier | Structural Designer: Innova

KEY PLAN:

6 October Monorail Engineering Unit
Valid For Construction

SCALE	SHOP DRAWING	DATE
AS SHOWN		12/05/2023

REV	DATE	DRN	CHK	APP	AMENDMENTS	STATUS
B	12/05/2023	M.KH	M.KH	DR.M.M	ISSUED FOR INFORMATION	IFI

DRAWING TITLE
6TH OF OCTOBER MONORAIL
SERVICE WALKWAYS
ZONE (1008)
Z8-BR001

Project Code	Rubric	Initiator	Lot	Ref	Number	Revision
93	M047	ACC60	DEP	DWG	0872	B

Tekla structures

approval is subject to approval of coordination package between multi-discipline

REVIEWED WITH COMMENT
MONORAILS PROJECT

All holes are 22mm U.N.O Length & Area & Weight per piece						
Z8-B009	L100*10	S235JR	1	2804.4	1.13	41.8
Mark	Profile	Grade	QTY	Length	Area	Weight

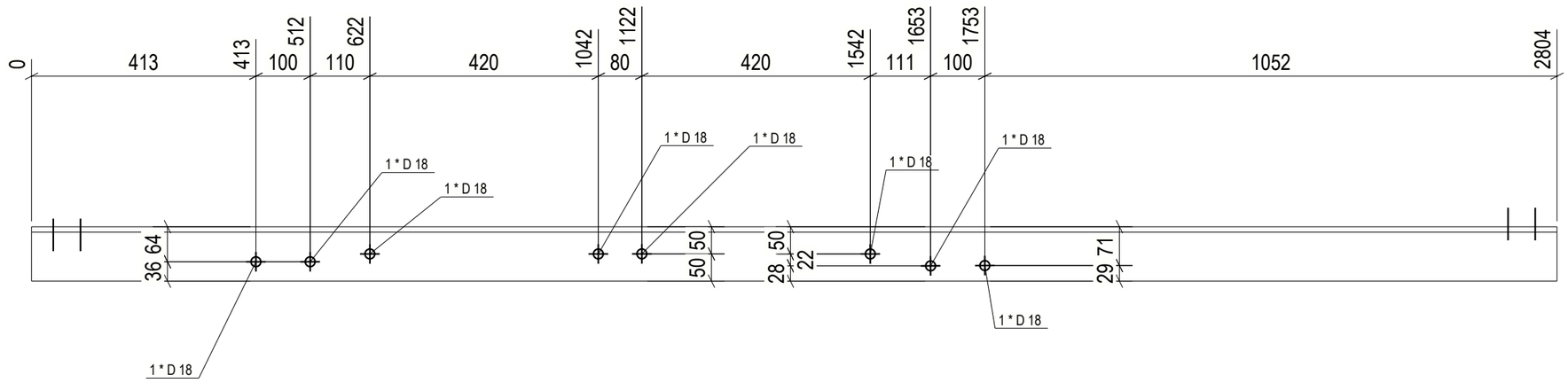

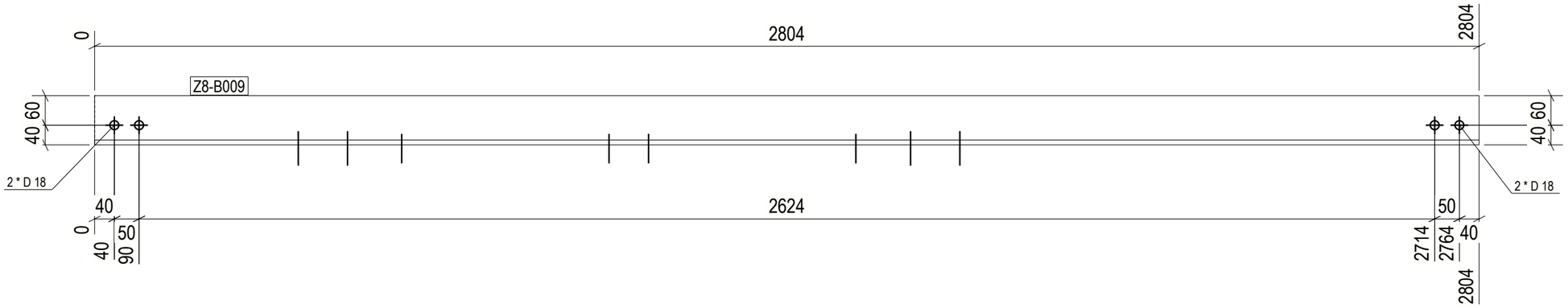

1 REQ'D AS DRAWN MK'D Z8-B009

GENERAL NOTES:

1. THE DIMENSIONS SHOWN ARE NOMINAL (IN MILLIMETERS), U.N.O.
2. WELD SIZESHALL BE AISC MINIMUM OF 6 mm UNLESS NOTED OTHERWISE.
3. ALL FIELD WELDS SHALL BE INSPECTED PER QUALITY ASSURANCE AND SPECIAL INSPECTIONS.

REFERENCE DRAWINGS

1	93M-BOA-NAT-LOT-04833
2	93M-BOA-NAT-LOT-09170
3	93M-BOA-NAT-LOT-01976
4	93M-BOA-NAT-LOT-20021
5	
6	
7	
8	
9	

6TH OF OCTOBER CITY RAIL TRANSIT MONORAIL

The Authority | Consultant: Hill International | Main Contractor: ORASCOM CONSTRUCTION, BOMBARDIER | Structural Designer: INNOVA TRANSPORTATION

KEY PLAN:

6 October Monorail
Engineering Unit
Valid For Construction

SCALE	SHOP DRAWING	DATE
AS SHOWN		12/05/2023

REV	DATE	DSN	CHK	APP	AMENDMENTS DESCRIPTION	STATUS
B	12/05/2023	M.KH	M.KH	DR.M.M	ISSUED FOR INFORMATION	IFI

DRAWING TITLE
6TH OF OCTOBER MONORAIL
SERVICE WALKWAYS
ZONE (1008)
Z8-B009

Project Code	Rubric	Initiator	Lot	Ref	Number	Revision
9 3 M	0 4 7 6	A C C	6 0 D E P	D W G	0 8 7 2 3	B

Tekla structures

approval is subject to approval of coordination package between multi-discipline

REVIEWED WITH COMMENT
MONORAILS PROJECT

All holes are 22mm U.N.O Length & Area & Weight per piece						
Z8-B008	L100*10	S235JR	1	2802.6	1.12	41.8
Mark	Profile	Grade	QTY	Length	Area	Weight

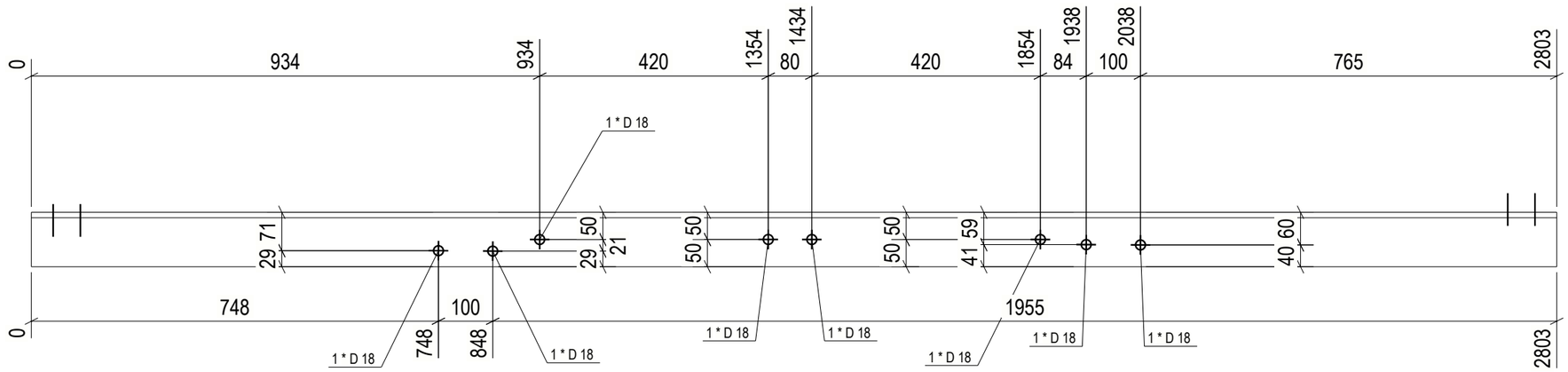

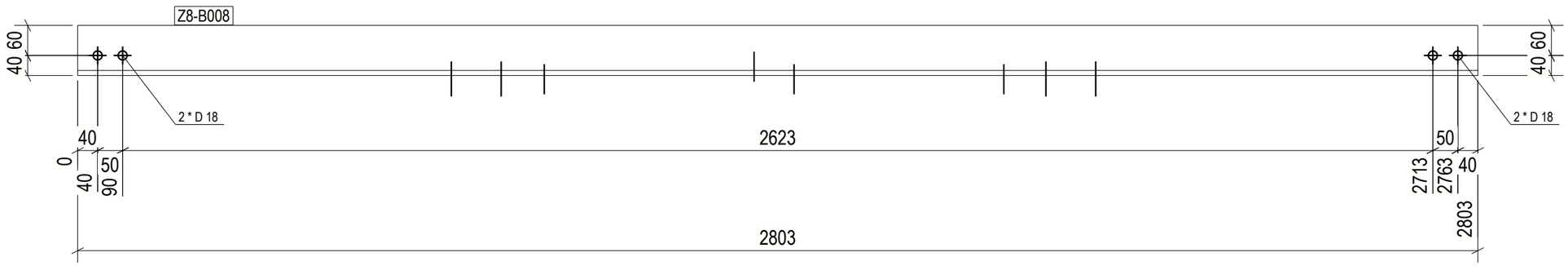

1 REQ'D AS DRAWN MK'D Z8-B008

6 October Monorail
Engineering Unit
Valid For Construction

GENERAL NOTES:

1. THE DIMENSIONS SHOWN ARE NOMINAL (IN MILLIMETERS), U.N.O.
2. WELD SIZESHALL BE AISC MINIMUM OF 6 mm UNLESS NOTED OTHERWISE.
3. ALL FIELD WELDS SHALL BE INSPECTED PER QUALITY ASSURANCE AND SPECIAL INSPECTIONS.

REFERENCE DRAWINGS

1	93M-BOA-NAT-LOT-04833
2	93M-BOA-NAT-LOT-09170
3	93M-BOA-NAT-LOT-01976
4	93M-BOA-NAT-LOT-20021
5	
6	
7	
8	
9	

6TH OF OCTOBER CITY RAIL TRANSIT MONORAIL

The Authority | Consultant: Hill International | Main Contractor | Structural Designer

KEY PLAN:

SCALE	SHOP DRAWING	DATE
AS SHOWN		12/05/2023

REV	DATE	DSN	CHK	APP	AMENDMENTS DESCRIPTION	STATUS
B	12/05/2023	M.KH	M.KH	DR.M.M	ISSUED FOR INFORMATION	IFI

DRAWING TITLE

6TH OF OCTOBER MONORAIL SERVICE WALKWAYS ZONE (1008)
Z8-B008

Project Code	Rubric	Initiator	Lot	Ref	Number	Revision
9 3	M 0 4 7 6	A C C	6 0 D E P	D W G	0 8 7 2 4	B

Tekla structures

approval is subject to approval of coordination package between multi-discipline

REVIEWED WITH COMMENT MONORAILS PROJECT

All holes are 22mm U.N.O Length & Area & Weight per piece						
Z8-B007	L100*10	S235JR	1	2807.9	1.13	41.9
Mark	Profile	Grade	QTY	Length	Area	Weight

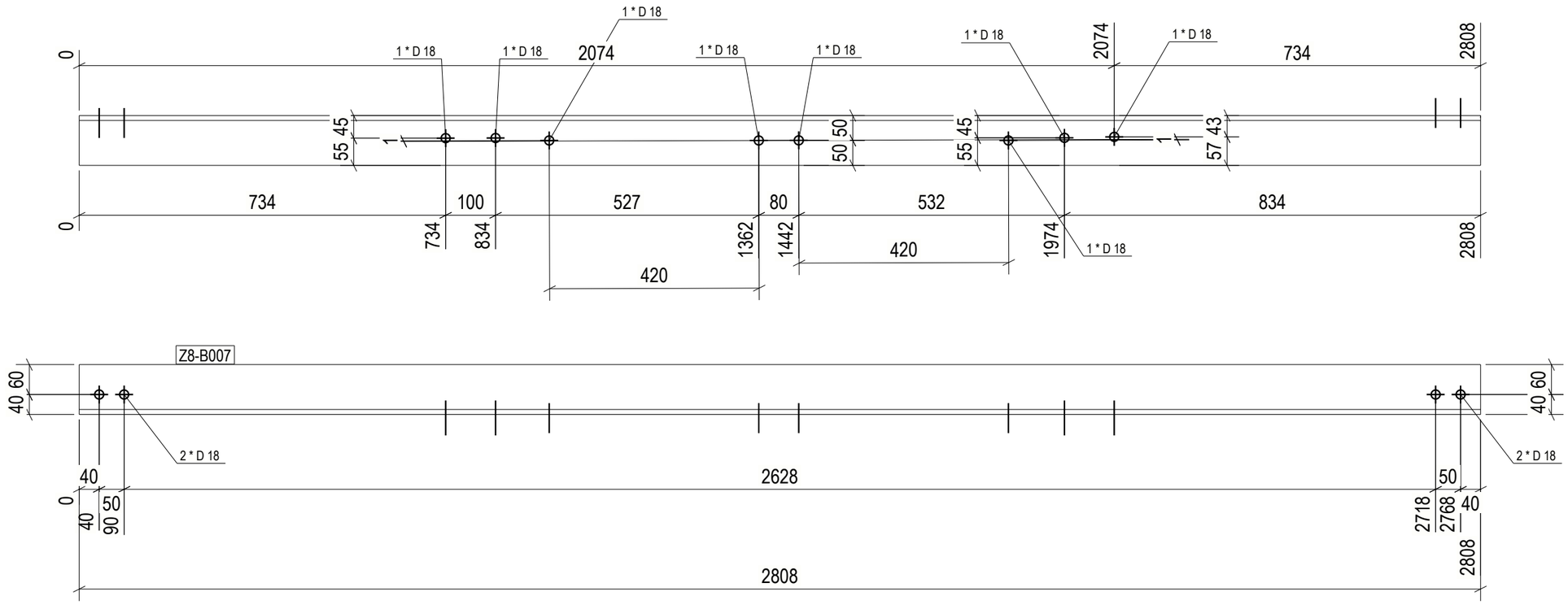

1 REQ'D AS DRAWN MK'D Z8-B007

6 October Monorail Engineering Unit Valid For Construction

GENERAL NOTES:

1. THE DIMENSIONS SHOWN ARE NOMINAL (IN MILLIMETERS), U.N.O.
2. WELD SIZESHALL BE AISC MINIMUM OF 6 mm UNLESS NOTED OTHERWISE.
3. ALL FIELD WELDS SHALL BE INSPECTED PER QUALITY ASSURANCE AND SPECIAL INSPECTIONS.

REFERENCE DRAWINGS

1	93M-BOA-NAT-LOT-04833
2	93M-BOA-NAT-LOT-09170
3	93M-BOA-NAT-LOT-01976
4	93M-BOA-NAT-LOT-20021
5	
6	
7	
8	
9	

6TH OF OCTOBER CITY RAIL TRANSIT MONORAIL

The Authority | Hill International Consultant | ORASCOM BOMBARDIER Main Contractor | INNOVA Structural Designer

KEY PLAN:

SCALE	SHOP DRAWING	DATE
AS SHOWN		12/05/2023

REV	DATE	DSG	CHK	APP	AMENDMENTS	STATUS
B	12/05/2023	M.KH	M.KH	DR.M.M	ISSUED FOR INFORMATION	IFI

DRAWING TITLE

6TH OF OCTOBER MONORAIL SERVICE WALKWAYS ZONE (1008)

Z8-B007

Project Code	Rubric	Initiator	Lot	Ref	Number	Revision
93M	0476	ACC	60DEP	DWG	08725	B

Tekla structures

approval is subject to approval of coordination package between multi-discipline

REVIEWED WITH COMMENT
MONORAILS PROJECT

All holes are 22mm U.N.O Length & Area & Weight per piece						
Z8-B006	IPE270	S355JR	1	3302.1	3.44	119.0
Mark	Profile	Grade	QTY	Length	Area	Weight

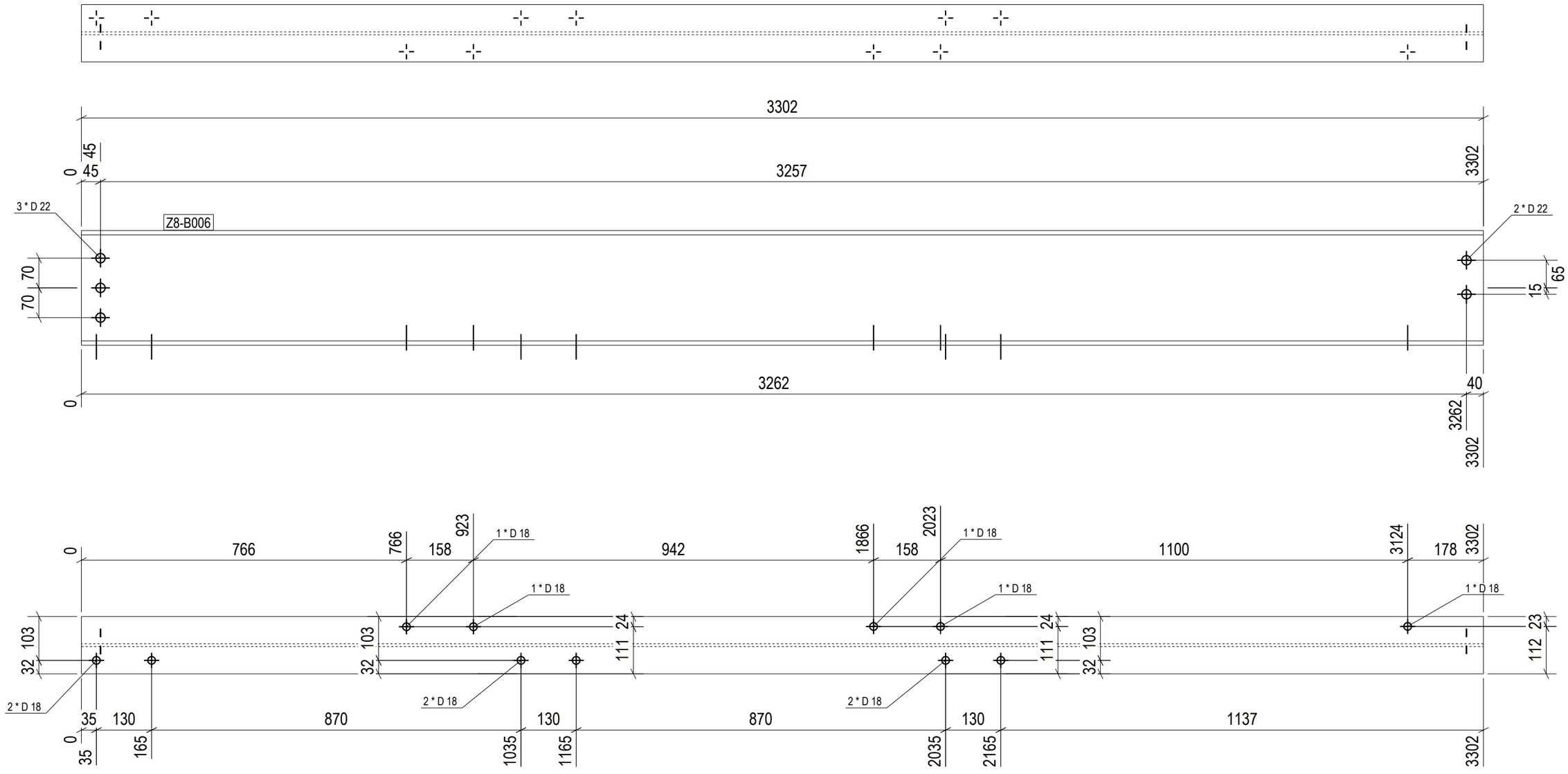

1 REQ'D AS DRAWN MK'D Z8-B006

6 October Monorail
Engineering Unit
Valid For Construction

GENERAL NOTES:

1. THE DIMENSIONS SHOWN ARE NOMINAL (IN MILLIMETERS), U.N.O.
2. WELD SIZESHALL BE AISC MINIMUM OF 6 mm UNLESS NOTED OTHERWISE.
3. ALL FIELD WELDS SHALL BE INSPECTED PER QUALITY ASSURANCE AND SPECIAL INSPECTIONS.

REFERENCE DRAWINGS

1	93M-BOA-NAT-LOT-04833
2	93M-BOA-NAT-LOT-09170
3	93M-BOA-NAT-LOT-01976
4	93M-BOA-NAT-LOT-20021
5	
6	
7	
8	
9	

6TH OF OCTOBER CITY RAIL TRANSIT MONORAIL

The Authority | Hill International Consultant | Main Contractor | Structural Designer

KEY PLAN:

SCALE: AS SHOWN | SHOP DRAWING | DATE: 12/05/2023

REV	DATE	DRN	CHK	APP	AMENDMENTS	STATUS
B	12/05/2023	M.KH	M.KH	DR.M.M	ISSUED FOR INFORMATION	IFI

DRAWING TITLE
6TH OF OCTOBER MONORAIL
SERVICE WALKWAYS
ZONE (1008)
Z8-B006

Project Code	Rubric	Initiator	Lot	Ref	Number	Revision
9 3	M 0 4 7 6	A C C	6 0 D E P	D W G	0 8 7 2 6	B

Tekla structures

approval is subject to approval of coordination package between multi-discipline

REVIEWED WITH COMMENT
MONORAILS PROJECT

All holes are 22mm U.N.O Length & Area & Weight per piece

Mark	Profile	Grade	QTY	Length	Area	Weight
Z8-B005	IPE270	S355JR	1	3256.7	3.39	117.3

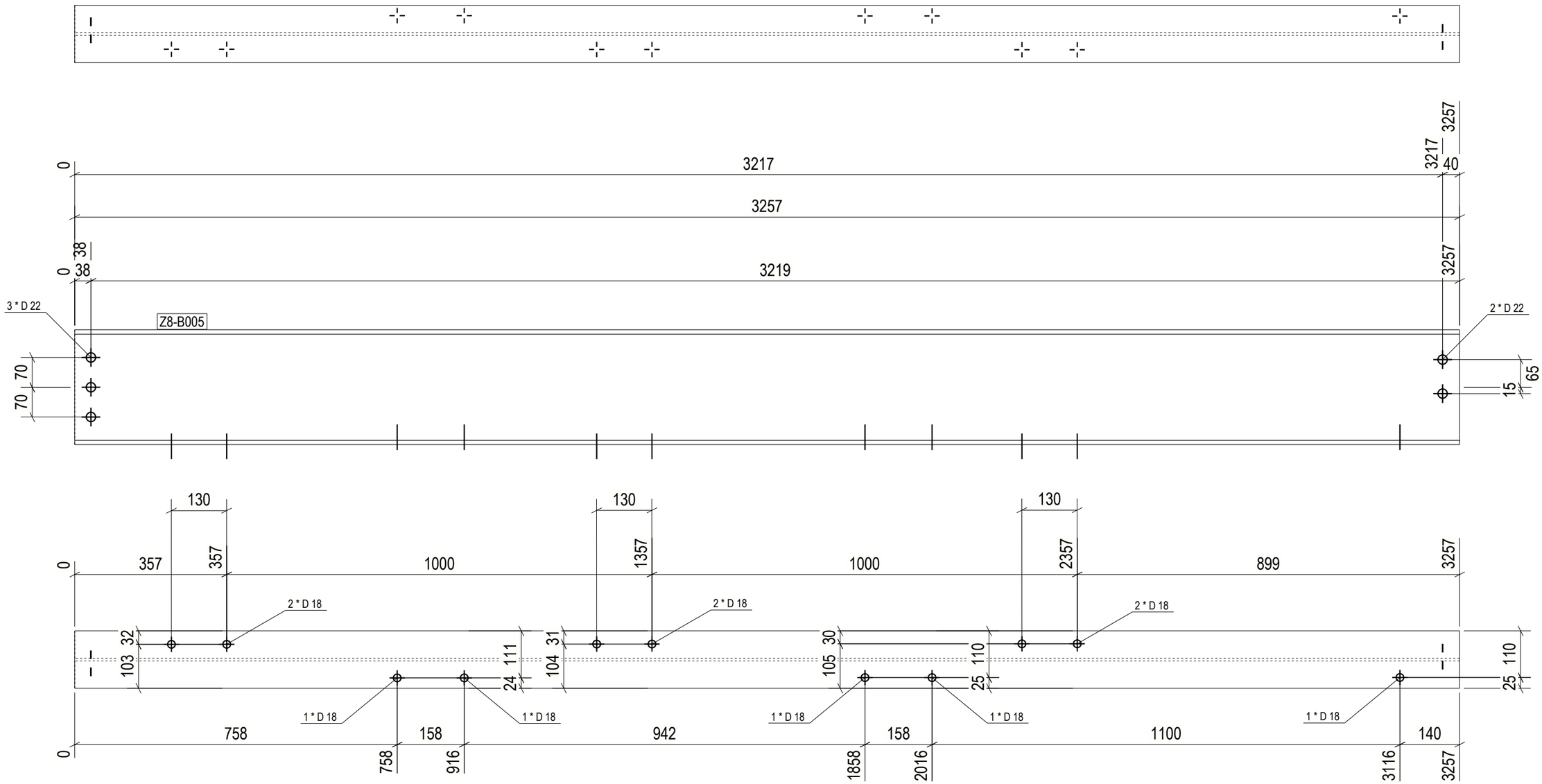

1 REQ'D AS DRAWN MK'D Z8-B005

6 October Monorail Engineering Unit Valid For Construction

GENERAL NOTES:

1. THE DIMENSIONS SHOWN ARE NOMINAL (IN MILLIMETERS), U.N.O.
2. WELD SIZESHALL BE AISC MINIMUM OF 6 mm UNLESS NOTED OTHERWISE.
3. ALL FIELD WELDS SHALL BE INSPECTED PER QUALITY ASSURANCE AND SPECIAL INSPECTIONS.

REFERENCE DRAWINGS

1	93M-BOA-NAT-LOT-04833
2	93M-BOA-NAT-LOT-09170
3	93M-BOA-NAT-LOT-01976
4	93M-BOA-NAT-LOT-20021
5	
6	
7	
8	
9	

6TH OF OCTOBER CITY RAIL TRANSIT MONORAIL

The Authority | Consultant: Hill International | Main Contractor: ORASCOM CONSTRUCTION / BOMBARDIER | Structural Designer: INNOVA TRANSPORTATION

KEY PLAN:

SCALE	SHOP DRAWING	DATE
AS SHOWN		12/05/2023

REV	DATE	DSN	CHK	APP	AMENDMENTS	STATUS
B	12/05/2023	M.KH	M.KH	DR.M.M	ISSUED FOR INFORMATION	IFI

DRAWING TITLE

6TH OF OCTOBER MONORAIL SERVICE WALKWAYS ZONE (1008)
Z8-B005

Project Code	Rubric	Initiator	Lot	Ref	Number	Revision
9 3	M 0 4 7 6	A C C	6 0 D E P	D W G	0 8 7 2 7	B

Tekla structures

approval is subject to approval of coordination package between multi-discipline

REVIEWED WITH COMMENT
MONORAILS PROJECT

All holes are 22mm U.N.O Length & Area & Weight per piece

Mark	Profile	Grade	QTY	Length	Area	Weight
Z8-B004	IPE270	S355JR	1	5593.2	5.82	201.5

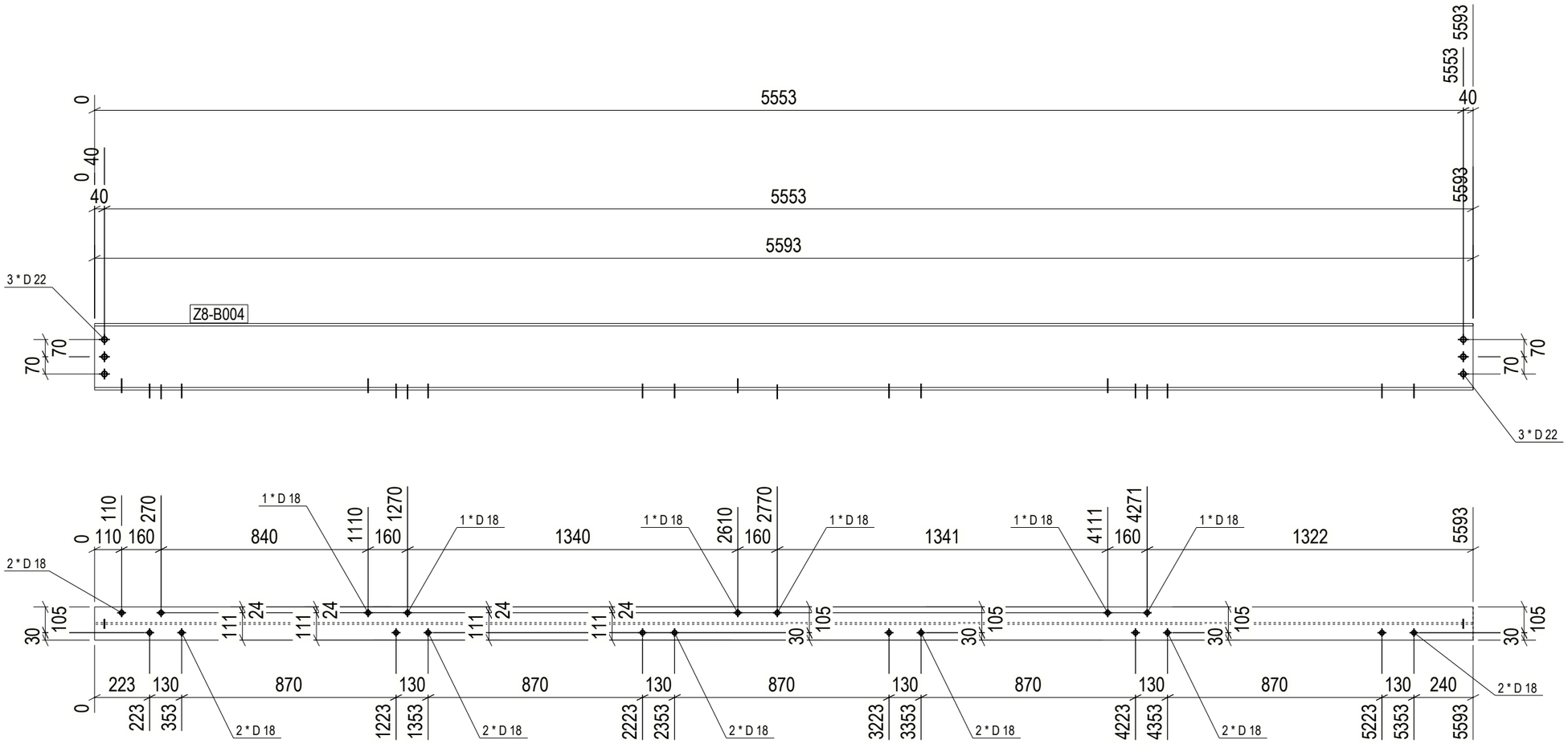

1 REQ'D AS DRAWN MK'D Z8-B004

6 October Monorail
Engineering Unit
Valid For Construction

GENERAL NOTES:

1. THE DIMENSIONS SHOWN ARE NOMINAL (IN MILLIMETERS), U.N.O.
2. WELD SIZESHALL BE AISC MINIMUM OF 6 mm UNLESS NOTED OTHERWISE.
3. ALL FIELD WELDS SHALL BE INSPECTED PER QUALITY ASSURANCE AND SPECIAL INSPECTIONS.

REFERENCE DRAWINGS

1	93M-BOA-NAT-LOT-04833
2	93M-BOA-NAT-LOT-09170
3	93M-BOA-NAT-LOT-01976
4	93M-BOA-NAT-LOT-20021
5	
6	
7	
8	
9	

6TH OF OCTOBER CITY RAIL TRANSIT MONORAIL

The Authority | Consultant: Hill International | Main Contractor: ORASCOM CONSTRUCTION / BOMBARDIER | Structural Designer: INNOVA TRANSPORTATION

KEY PLAN:

SCALE	SHOP DRAWING	DATE
AS SHOWN		12/05/2023

REV	DATE	DSN	CHK	APP	AMENDMENT DESCRIPTION	STATUS
B	12/05/2023	M.KH	M.KH	DR.M.M	ISSUED FOR INFORMATION	IFI

DRAWING TITLE
6TH OF OCTOBER MONORAIL
SERVICE WALKWAYS
ZONE (1008)
Z8-B004

Project Code	Rubric	Initiator	Lot	Ref	Number	Revision
9 3	M 0 4 7 6	A C C	6 0 D E P	D W G	0 8 7 2 8	B

Tekla structures

approval is subject to approval of coordination package between multi-discipline

REVIEWED WITH COMMENT
MONORAILS PROJECT

All holes are 22mm U.N.O Length & Area & Weight per piece

Mark	Profile	Grade	QTY	Length	Area	Weight
Z8-B003	IPE270	S355JR	1	5603.1	5.83	201.9

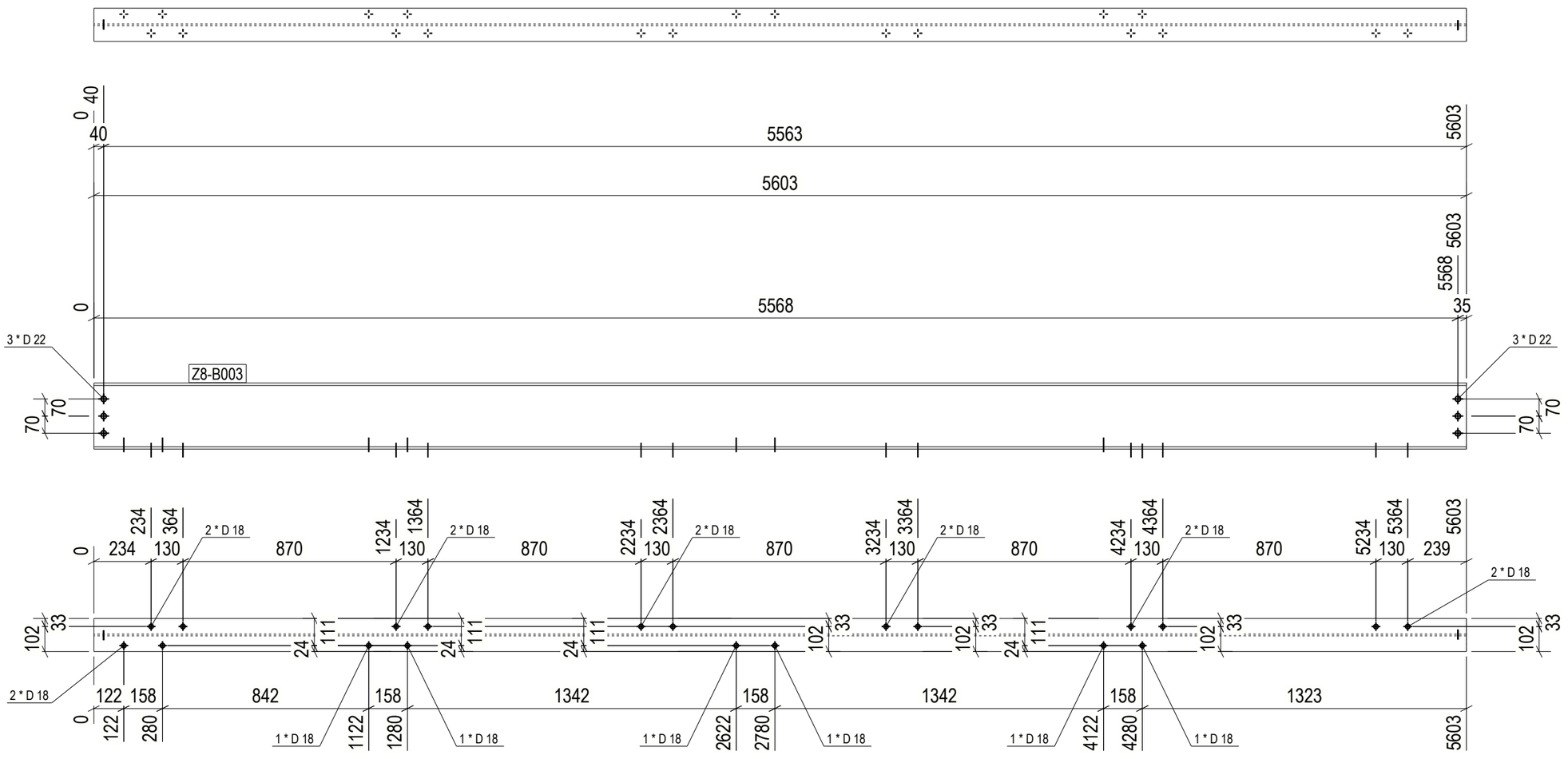

1 REQ'D AS DRAWN MK'D Z8-B003

6 October Monorail
Engineering Unit
Valid For Construction

GENERAL NOTES:

1. THE DIMENSIONS SHOWN ARE NOMINAL (IN MILLIMETERS), U.N.O.
2. WELD SIZESHALL BE AISC MINIMUM OF 6 mm UNLESS NOTED OTHERWISE.
3. ALL FIELD WELDS SHALL BE INSPECTED PER QUALITY ASSURANCE AND SPECIAL INSPECTIONS.

REFERENCE DRAWINGS

1	93M-BOA-NAT-LOT-04833
2	93M-BOA-NAT-LOT-09170
3	93M-BOA-NAT-LOT-01976
4	93M-BOA-NAT-LOT-20021
5	
6	
7	
8	
9	

6TH OF OCTOBER CITY RAIL TRANSIT MONORAIL

The Authority | Consultant: Hill International | Main Contractor: ORASCOM CONSTRUCTION, BOMBARDIER | Structural Designer: INNOVA TRANSPORTATION

KEY PLAN:

SCALE	SHOP DRAWING	DATE
AS SHOWN		12/05/2023

REV	DATE	DWG	CHK	APP	AMENDMENTS	STATUS
B	12/05/2023	M.KH	M.KH	DR.M.M	ISSUED FOR INFORMATION	IFI

DRAWING TITLE

6TH OF OCTOBER MONORAIL
SERVICE WALKWAYS
ZONE (1008)
Z8-B003

Project Code	Rubric	Initiator	Lot	Ref	Number	Revision
9 3 M 0 4 7 6	A C C 6 0 D E P	D W G	0 8 7 2 9	B

Tekla structures

approval is subject to approval of coordination package between multi-discipline

REVIEWED WITH COMMENT
MONORAILS PROJECT

All holes are 22mm U.N.O Length & Area & Weight per piece

Mark	Profile	Grade	QTY	Length	Area	Weight
Z8-B002	IPE270	S355JR	1	5600.3	5.83	201.8

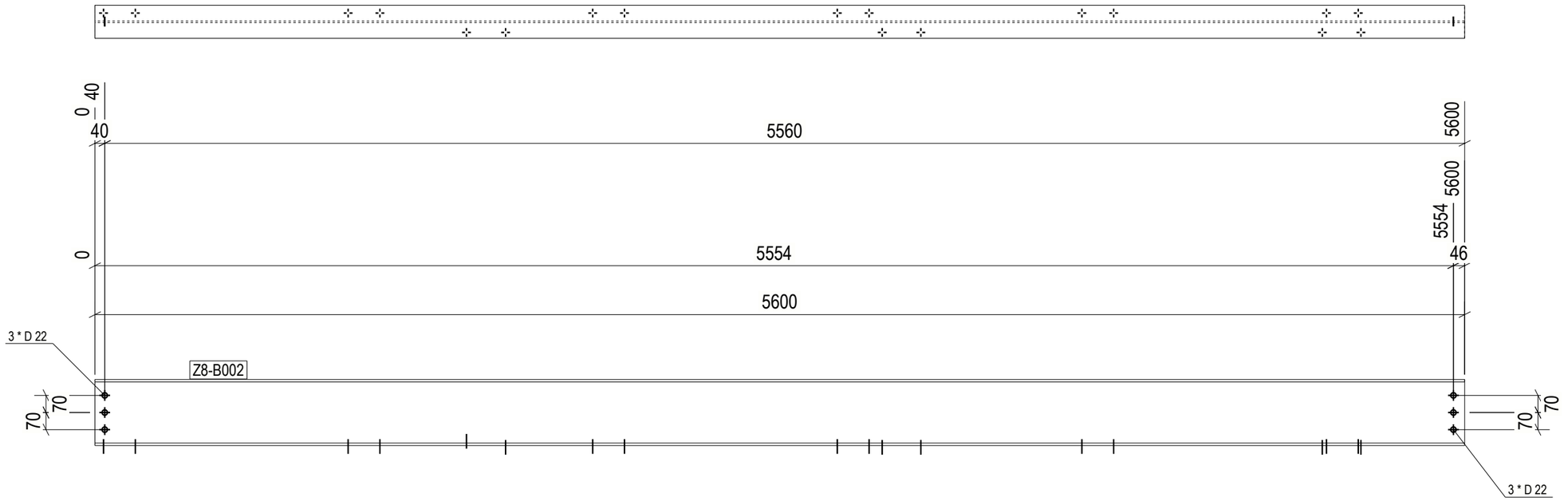

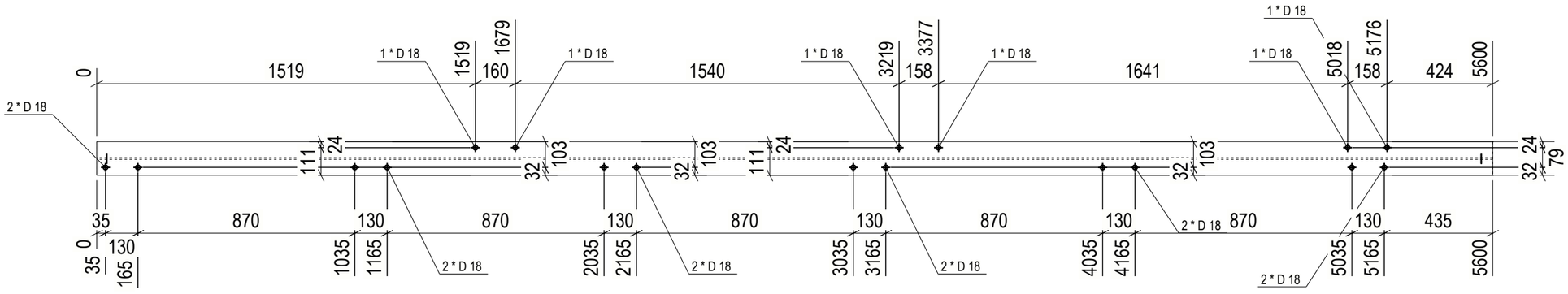

1 REQ'D AS DRAWN MK'D Z8-B002

GENERAL NOTES:

1. THE DIMENSIONS SHOWN ARE NOMINAL (IN MILLIMETERS), U.N.O.
2. WELD SIZESHALL BE AISC MINIMUM OF 6 mm UNLESS NOTED OTHERWISE.
3. ALL FIELD WELDS SHALL BE INSPECTED PER QUALITY ASSURANCE AND SPECIAL INSPECTIONS.

REFERENCE DRAWINGS

1	93M-BOA-NAT-LOT-04833
2	93M-BOA-NAT-LOT-09170
3	93M-BOA-NAT-LOT-01976
4	93M-BOA-NAT-LOT-20021
5	
6	
7	
8	
9	

6TH OF OCTOBER CITY RAIL TRANSIT MONORAIL

The Authority | Hill International Consultant | Main Contractor | Structural Designer

KEY PLAN:

6 October Monorail Engineering Unit
Valid For Construction

REV	DATE	DSN	CHK	APP	AMENDMENTS DESCRIPTION	STATUS
B	12/05/2023	M.KH	M.KH	DR.M.M	ISSUED FOR INFORMATION	IFI
A	12/05/2023	M.KH	M.KH	DR.M.M	ISSUED FOR INFORMATION	IFI

SCALE: AS SHOWN | SHOP DRAWING | DATE: 12/05/2023

DRAWING TITLE
6TH OF OCTOBER MONORAIL
SERVICE WALKWAYS
ZONE (1008)
Z8-B002

Project Code	Rubric	Initiator	Lot	Ref	Number	Revision
9 3	M 0 4 7 6	A C C	6 0 D E P	D W G	0 8 7 3 0	B

Tekla structures

approval is subject to approval of coordination package between multi-discipline

REVIEWED WITH COMMENT
MONORAILS PROJECT

All holes are 22mm U.N.O Length & Area & Weight per piece

Mark	Profile	Grade	QTY	Length	Area	Weight
Z8-B001	IPE270	S355JR	1	5600.3	5.83	201.8

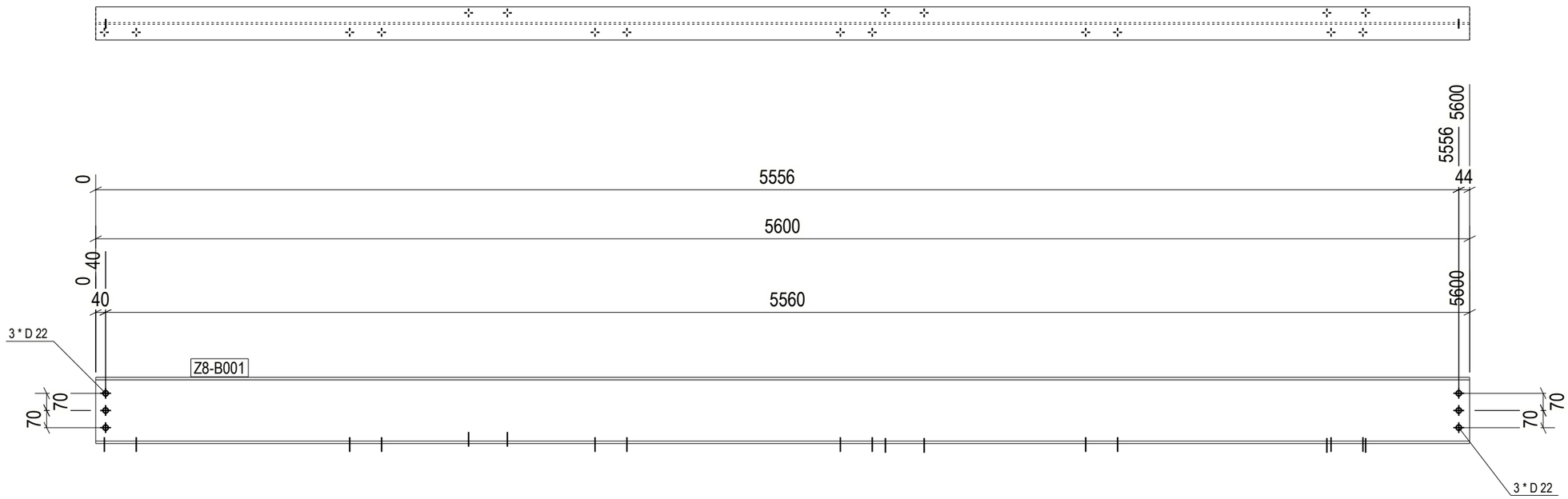

1 REQ'D AS DRAWN MK'D Z8-B001

6 October Monorail
Engineering Unit
Valid For Construction

GENERAL NOTES:

1. THE DIMENSIONS SHOWN ARE NOMINAL (IN MILLIMETERS), U.N.O.
2. WELD SIZESHALL BE AISC MINIMUM OF 6 mm UNLESS NOTED OTHERWISE.
3. ALL FIELD WELDS SHALL BE INSPECTED PER QUALITY ASSURANCE AND SPECIAL INSPECTIONS.

REFERENCE DRAWINGS

1	93M-BOA-NAT-LOT-04833
2	93M-BOA-NAT-LOT-09170
3	93M-BOA-NAT-LOT-01976
4	93M-BOA-NAT-LOT-20021
5	
6	
7	
8	
9	

6TH OF OCTOBER CITY RAIL TRANSIT MONORAIL

The Authority | Consultant: Hill International | Main Contractor: ORASCOM CONSTRUCTION, BOMBARDIER | Structural Designer: INNOVA TRANSPORTATION

KEY PLAN:

SCALE: AS SHOWN | SHOP DRAWING | DATE: 12/05/2023

REV	DATE	DSN	CHK	APP	AMENDMENT DESCRIPTION	STATUS
B	12/05/2023	M.KH	M.KH	DR.M.M	ISSUED FOR INFORMATION	IFI

DRAWING TITLE

6TH OF OCTOBER MONORAIL
SERVICE WALKWAYS
ZONE (1008)
Z8-B001

Project Code	Rubric	Initiator	Lot	Ref	Number	Revision
9 3 M	0 4 7 6	A C C	6 0 D E P	D W G	0 8 7 3 1	B

Tekla structures

approval is subject to approval of coordination package between multi-discipline

REVIEWED WITH COMMENT
MONORAILS PROJECT

All holes are 22mm U.N.O Length & Area & Weight per piece

Mark	Profile	Grade	QTY	Length	Area	Weight
W843	PL8*208	S355-JR	1	215.7	0.07	1.9

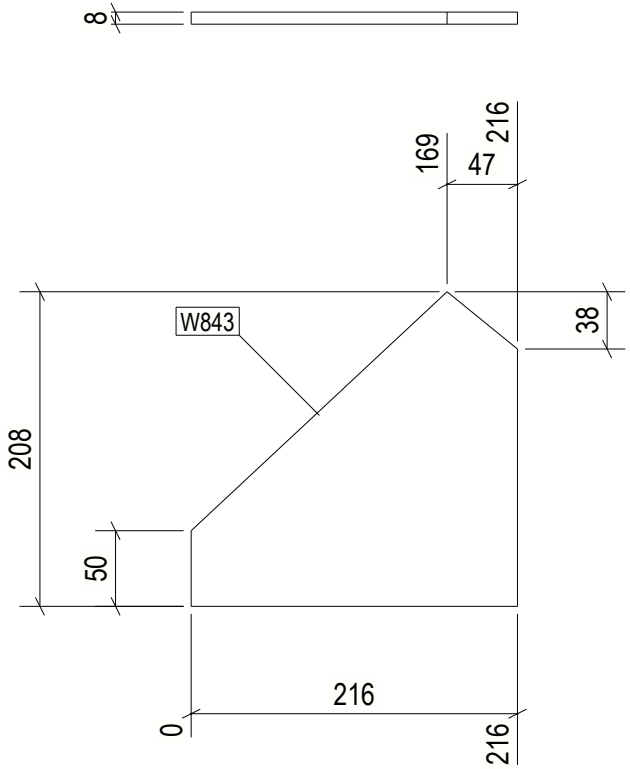

1 REQ'D AS DRAWN MK'D W843

6 October Monorail
Engineering Unit
Valid For Construction

Tekla structures

GENERAL NOTES:

1. THE DIMENSIONS SHOWN ARE NOMINAL (IN MILLIMETERS), U.N.O.
2. WELD SIZESHALL BE AISC MINIMUM OF 6 mm UNLESS NOTED OTHERWISE.
3. ALL FIELD WELDS SHALL BE INSPECTED PER QUALITY ASSURANCE AND SPECIAL INSPECTIONS.

REFERENCE DRAWINGS

1	93M-BOA-NAT-LOT-04833
2	93M-BOA-NAT-LOT-09170
3	93M-BOA-NAT-LOT-01976
4	93M-BOA-NAT-LOT-20021
5	
6	
7	
8	
9	

6TH OF OCTOBER CITY RAIL TRANSIT MONORAIL

The Authority | Hill International Consultant | Main Contractor | Structural Designer

KEY PLAN:

REV.	DATE	DSG	CHK	APP	AMENDMENTS	STATUS
B	12/05/2023	M.KH	M.KH	DR.M.M	ISSUED FOR INFORMATION	IFI
A	11/20/2022	M.KH	M.KH	DR.M.M	ISSUED FOR INFORMATION	IFI

SCALE: AS SHOWN | SHOPDRAWING | DATE: 12/05/2023

DRAWING TITLE
6TH OF OCTOBER MONORAIL
SERVICE WALKWAYS
ZONE (1008)
W843

Project Code	Rubric	Initiator	Lot	Ref	Number	Revision
9 3 M	0 4 7 6	A C C	6 0 D E P	D W G	0 8 7 3 2	B

approval is subject to approval of coordination package between multi-discipline

REVIEWED WITH COMMENT
MONORAILS PROJECT

All holes are 22mm U.N.O Length & Area & Weight per piece

Mark	Profile	Grade	QTY	Length	Area	Weight
W842	PL8*183.9	S355-JR	1	208.0	0.06	1.8

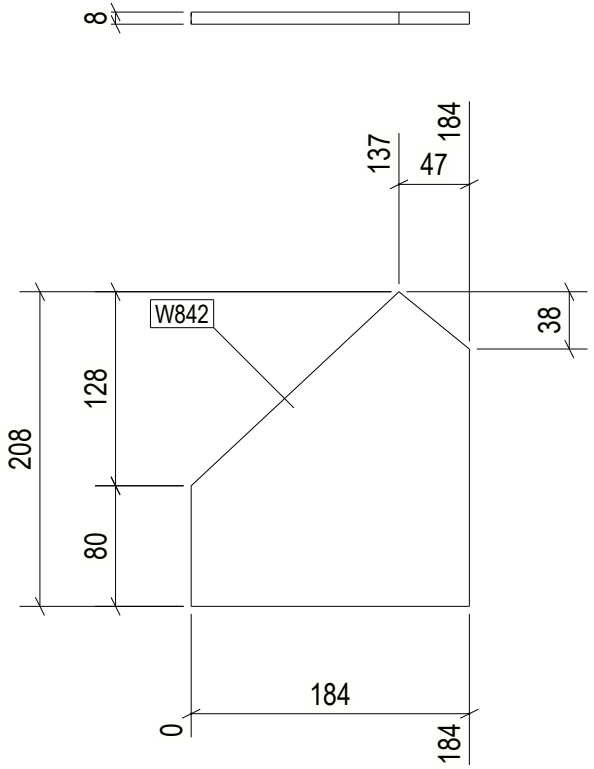

1 REQ'D AS DRAWN MK'D W842

6 October Monorail
Engineering Unit
Valid For Construction

GENERAL NOTES:

1. THE DIMENSIONS SHOWN ARE NOMINAL (IN MILLIMETERS), U.N.O.
2. WELD SIZESHALL BE AISC MINIMUM OF 6 mm UNLESS NOTED OTHERWISE.
3. ALL FIELD WELDS SHALL BE INSPECTED PER QUALITY ASSURANCE AND SPECIAL INSPECTIONS.

REFERENCE DRAWINGS

1	93M-BOA-NAT-LOT-04833
2	93M-BOA-NAT-LOT-09170
3	93M-BOA-NAT-LOT-01976
4	93M-BOA-NAT-LOT-20021
5	
6	
7	
8	
9	

6TH OF OCTOBER CITY RAIL TRANSIT MONORAIL

The Authority | Hill International Consultant | Main Contractor | Structural Designer

KEY PLAN:

REV.	DATE	DSG	CHK	APP	AMENDMENTS	STATUS
B	12/05/2023	M.KH	M.KH	DR.M.M	ISSUED FOR INFORMATION	IFI
A	11/20/2022	M.KH	M.KH	DR.M.M	ISSUED FOR INFORMATION	IFI

SCALE AS SHOWN | SHOPDRAWING | DATE 12/05/2023

DRAWING TITLE
6TH OF OCTOBER MONORAIL
SERVICE WALKWAYS
ZONE (1008)
W842

Project Code	Rubric	Initiator	Lot	Ref	Number	Revision
9 3 M	0 4 7 6	A C C	6 0 D E P	D W G	0 8 7 3	B

Tekla structures

approval is subject to approval of coordination package between multi-discipline

REVIEWED WITH COMMENT MONORAILS PROJECT

All holes are 22mm U.N.O Length & Area & Weight per piece

Mark	Profile	Grade	QTY	Length	Area	Weight
W841	L60*6	S235JR	1	685.9	0.17	3.7

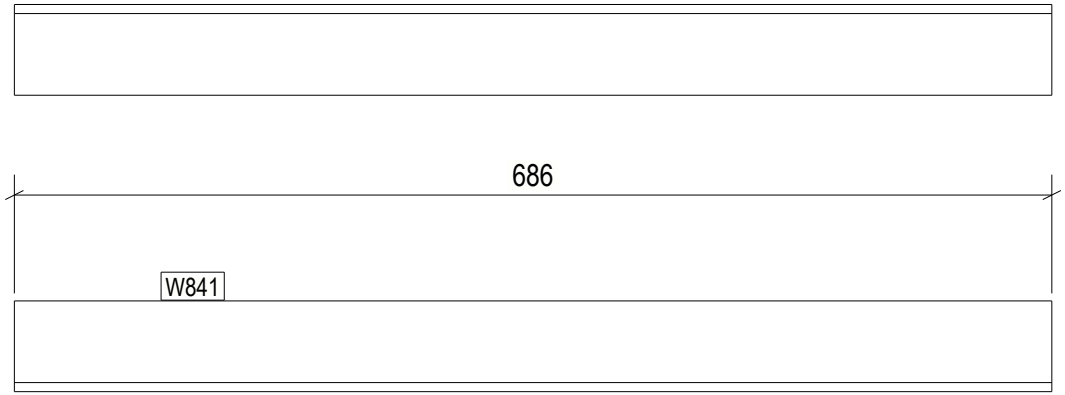

1 REQ'D AS DRAWN MK'D W841

6 October Monorail Engineering Unit Valid For Construction

GENERAL NOTES:

1. THE DIMENSIONS SHOWN ARE NOMINAL (IN MILLIMETERS), U.N.O.
2. WELD SIZESHALL BE AISC MINIMUM OF 6 mm UNLESS NOTED OTHERWISE.
3. ALL FIELD WELDS SHALL BE INSPECTED PER QUALITY ASSURANCE AND SPECIAL INSPECTIONS.

REFERENCE DRAWINGS

1	93M-BOA-NAT-LOT-04833
2	93M-BOA-NAT-LOT-09170
3	93M-BOA-NAT-LOT-01976
4	93M-BOA-NAT-LOT-20021
5	
6	
7	
8	
9	

6TH OF OCTOBER CITY RAIL TRANSIT MONORAIL

The Authority | Hill International Consultant | Main Contractor | Structural Designer

KEY PLAN:

SCALE: AS SHOWN | SHOPDRAWING | DATE: 12/09/2023

REV	DATE	DSG	CHK	APP	AMENDMENTS	STATUS
B	12/05/2023	M.KH	M.KH	DR.BIM	ISSUED FOR INFORMATION	IFI
A	11/20/2022	M.KH	M.KH	DR.BIM	ISSUED FOR INFORMATION	IFI

DRAWING TITLE

6TH OF OCTOBER MONORAIL SERVICE WALKWAYS ZONE (1008) W841

Project Code	Rubric	Initiator	Lot	Ref	Number	Revision
9 3 M	0 4 7 6	A C C	6 0 D E	P D W	G 0 8 7 3 4	B

Tekla structures

approval is subject to approval of coordination package between multi-discipline

REVIEWED WITH COMMENT
MONORAILS PROJECT

All holes are 22mm U.N.O Length & Area & Weight per piece

Mark	Profile	Grade	QTY	Length	Area	Weight
W838	PL3*45	S355-JR	1	45.0	0.00	0.0

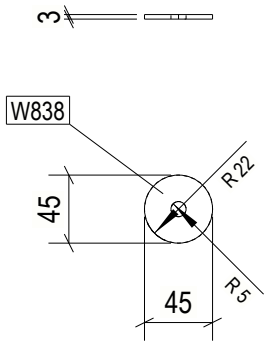

1 REQ'D AS DRAWN MK'D W838

6 October Monorail
Engineering Unit
Valid For Construction

Tekla structures

GENERAL NOTES:

1. THE DIMENSIONS SHOWN ARE NOMINAL (IN MILLIMETERS), U.N.O.
2. WELD SIZESHALL BE AISC MINIMUM OF 6 mm UNLESS NOTED OTHERWISE.
3. ALL FIELD WELDS SHALL BE INSPECTED PER QUALITY ASSURANCE AND SPECIAL INSPECTIONS.

REFERENCE DRAWINGS

1	93M-BOA-NAT-LOT-04833
2	93M-BOA-NAT-LOT-09170
3	93M-BOA-NAT-LOT-01976
4	93M-BOA-NAT-LOT-20021
5	
6	
7	
8	
9	

6TH OF OCTOBER CITY RAIL TRANSIT MONORAIL

The Authority | Hill International Consultant | Main Contractor | Structural Designer

KEY PLAN:

SCALE: AS SHOWN | SHOPDRAWING | DATE: 12/09/2023

REV	DATE	DSG	CHK	APP	AMENDMENTS	STATUS
B	12/05/2023	M.KH	M.KH	DR.BM	ISSUED FOR INFORMATION	IFI
A	11/20/2022	M.KH	M.KH	DR.BM	ISSUED FOR INFORMATION	IFI

DRAWING TITLE

6TH OF OCTOBER MONORAIL
SERVICE WALKWAYS
ZONE (1008)
W838

Project Code	Rubric	Initiator	Lot	Ref	Number	Revision
9 3 M	0 4 7 6	A C C	6 0 D E P	D W G	0 8 7 3 5	B

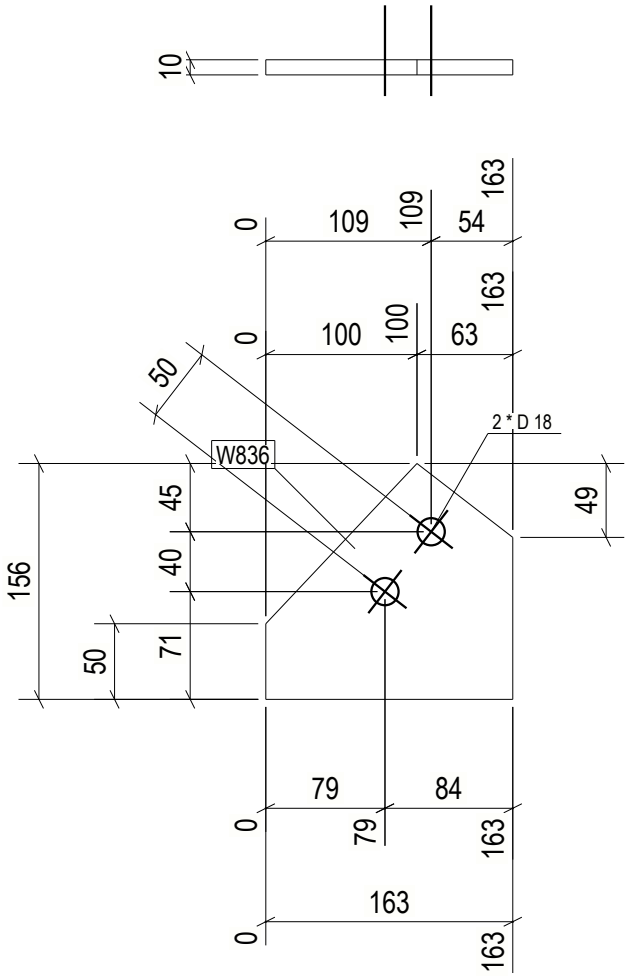

All holes are 22mm U.N.O Length & Area & Weight per piece

Mark	Profile	Grade	QTY	Length	Area	Weight
W836	PL10*156	S355JR	4	163.3	0.04	1.5

approval is subject to approval of coordination package between multi-discipline

REVIEWED WITH COMMENT MONORAILS PROJECT

4 REQ'D AS DRAWN MK'D W836

6 October Monorail Engineering Unit Valid For Construction

GENERAL NOTES:

1. THE DIMENSIONS SHOWN ARE NOMINAL (IN MILLIMETERS), U.N.O.
2. WELD SIZESHALL BE AISC MINIMUM OF 6 mm UNLESS NOTED OTHERWISE.
3. ALL FIELD WELDS SHALL BE INSPECTED PER QUALITY ASSURANCE AND SPECIAL INSPECTIONS.

REFERENCE DRAWINGS

1	93M-BOA-NAT-LOT-04833
2	93M-BOA-NAT-LOT-09170
3	93M-BOA-NAT-LOT-01976
4	93M-BOA-NAT-LOT-20021
5	
6	
7	
8	
9	

6TH OF OCTOBER CITY RAIL TRANSIT MONORAIL

The Authority | Hill International Consultant | Main Contractor | Structural Designer

KEY PLAN:

REV.	DATE	DSG	CHK	APP	AMENDMENTS	STATUS
B	12/05/2023	M.KH	M.KH	DR.M.M	ISSUED FOR INFORMATION	IFI
A	11/20/2022	M.KH	M.KH	DR.M.M	ISSUED FOR INFORMATION	IFI

SCALE AS SHOWN | SHOPDRAWING | DATE 12/05/2023

DRAWING TITLE
6TH OF OCTOBER MONORAIL
SERVICE WALKWAYS
ZONE (1008)
W836

Project Code	Rubric	Initiator	Lot	Ref	Number	Revision
93M	047	ACC	60	EP	DWG	0873	B

Tekla structures

All holes are 22mm U.N.O Length & Area & Weight per piece						
W835	PL10*151.5	S355JR	2	203.1	0.05	1.7
Mark	Profile	Grade	QTY	Length	Area	Weight

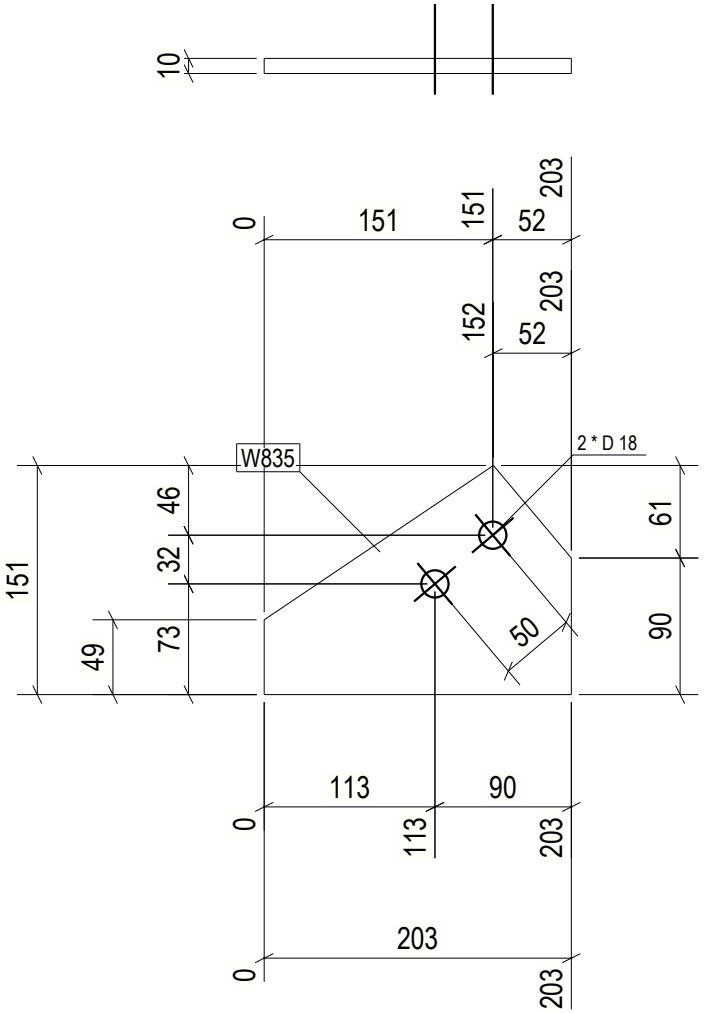

approval is subject to approval of coordination package between multi-discipline

REVIEWED WITH COMMENT MONORAILS PROJECT

2 REQ'D AS DRAWN MK'D W835

6 October Monorail Engineering Unit Valid For Construction

GENERAL NOTES:

1. THE DIMENSIONS SHOWN ARE NOMINAL (IN MILLIMETERS), U.N.O.
2. WELD SIZESHALL BE AISC MINIMUM OF 6 mm UNLESS NOTED OTHERWISE.
3. ALL FIELD WELDS SHALL BE INSPECTED PER QUALITY ASSURANCE AND SPECIAL INSPECTIONS.

REFERENCE DRAWINGS

1	93M-BOA-NAT-LOT-04833
2	93M-BOA-NAT-LOT-09170
3	93M-BOA-NAT-LOT-01976
4	93M-BOA-NAT-LOT-20021
5	
6	
7	
8	
9	

6TH OF OCTOBER CITY RAIL TRANSIT MONORAIL

The Authority | Hill International Consultant | Main Contractor | Structural Designer

KEY PLAN:

REV	DATE	DSG	CHK	APP	AMENDMENTS	STATUS
B	12/05/2023	M.KH	M.KH	DR.M.M	ISSUED FOR INFORMATION	IFI
A	11/20/2022	M.KH	M.KH	DR.M.M	ISSUED FOR INFORMATION	IFI

SCALE AS SHOWN | SHOPDRAWING | DATE 12/05/2023

DRAWING TITLE
6TH OF OCTOBER MONORAIL
SERVICE WALKWAYS
ZONE (1008)
W835

Project Code	Rubric	Initiator	Lot	Ref	Number	Revision
93M	047	6AC	60DEP	DWG	0873	B

Tekla structures

All holes are 22mm U.N.O Length & Area & Weight per piece						
W834	PL10*155.2	S355JR	2	219.5	0.05	1.9
Mark	Profile	Grade	QTY	Length	Area	Weight

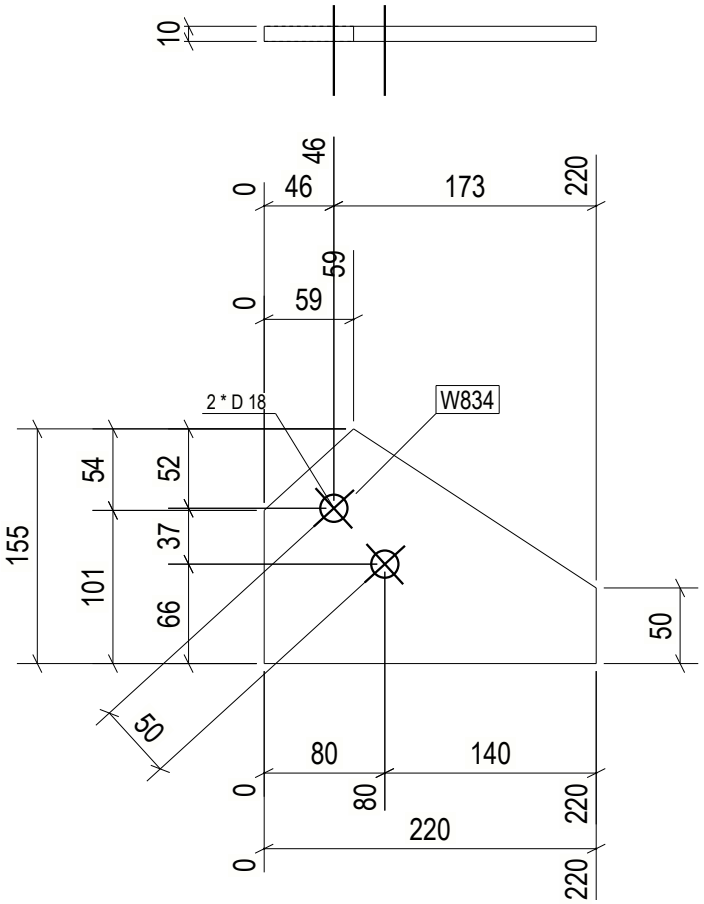

approval is subject to approval of coordination package between multi-discipline

REVIEWED WITH COMMENT MONORAILS PROJECT

2 REQ'D AS DRAWN MK'D W834

6 October Monorail Engineering Unit Valid For Construction

GENERAL NOTES:

1. THE DIMENSIONS SHOWN ARE NOMINAL (IN MILLIMETERS), U.N.O.
2. WELD SIZESHALL BE AISC MINIMUM OF 6 mm UNLESS NOTED OTHERWISE.
3. ALL FIELD WELDS SHALL BE INSPECTED PER QUALITY ASSURANCE AND SPECIAL INSPECTIONS.

REFERENCE DRAWINGS

1	93M-BOA-NAT-LOT-04833
2	93M-BOA-NAT-LOT-09170
3	93M-BOA-NAT-LOT-01976
4	93M-BOA-NAT-LOT-20021
5	
6	
7	
8	
9	

6TH OF OCTOBER CITY RAIL TRANSIT MONORAIL

The Authority | Hill International Consultant | Main Contractor | Structural Designer

KEY PLAN:

SCALE: AS SHOWN | SHOPDRAWING | DATE: 12/09/2023

REV	DATE	DSG	CHK	APP	AMENDMENTS	STATUS
B	12/05/2023	M.KH	M.KH	DR.M.M	ISSUED FOR INFORMATION	IFI
A	11/20/2022	M.KH	M.KH	DR.M.M	ISSUED FOR INFORMATION	IFI

DRAWING TITLE

6TH OF OCTOBER MONORAIL SERVICE WALKWAYS ZONE (1008) W834

Project Code	Rubric	Initiator	Lot	Ref	Number	Revision
9 3 M	0 4 7 6	A C C	6 0 D	E P	D W G	0 8 7 3 8	B

Tekla structures

All holes are 22mm U.N.O Length & Area & Weight per piece

Mark	Profile	Grade	QTY	Length	Area	Weight
W833	PL10*155.9	S355JR	1	172.9	0.04	1.5

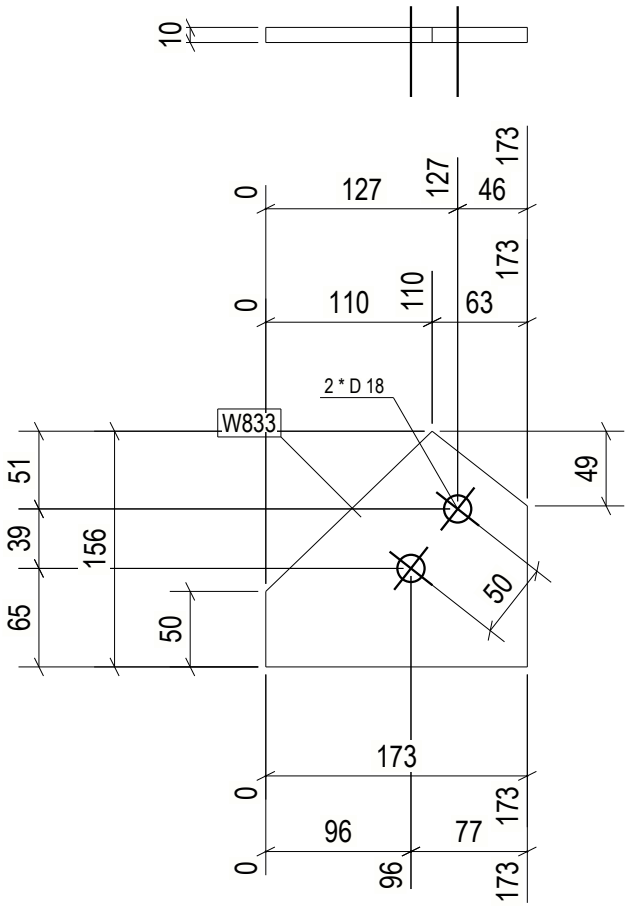

approval is subject to approval of coordination package between multi-discipline

REVIEWED WITH COMMENT
MONORAILS PROJECT

1 REQ'D AS DRAWN MK'D W833

6 October Monorail
Engineering Unit
Valid For Construction

GENERAL NOTES:

1. THE DIMENSIONS SHOWN ARE NOMINAL (IN MILLIMETERS), U.N.O.
2. WELD SIZESHALL BE AISC MINIMUM OF 6 mm UNLESS NOTED OTHERWISE.
3. ALL FIELD WELDS SHALL BE INSPECTED PER QUALITY ASSURANCE AND SPECIAL INSPECTIONS.

REFERENCE DRAWINGS

1	93M-BOA-NAT-LOT-04833
2	93M-BOA-NAT-LOT-09170
3	93M-BOA-NAT-LOT-01976
4	93M-BOA-NAT-LOT-20021
5	
6	
7	
8	
9	

6TH OF OCTOBER CITY RAIL TRANSIT MONORAIL

The Authority | Hill International Consultant | Main Contractor | Structural Designer

KEY PLAN:

SCALE: AS SHOWN | SHOPDRAWING | DATE: 12/09/2023

REV	DATE	DSG	CHK	APP	AMENDMENTS	STATUS
B	12/05/2023	M.KH	M.KH	DR.BUM	ISSUED FOR INFORMATION	IFI
A	11/20/2022	M.KH	M.KH	DR.BUM	ISSUED FOR INFORMATION	IFI

DRAWING TITLE

6TH OF OCTOBER MONORAIL
SERVICE WALKWAYS
ZONE (1008)
W833

Project Code	Rubric	Initiator	Lot	Ref	Number	Revision
93M	047	ACC	60	EP	DWG	0873	B

Tekla structures

All holes are 22mm U.N.O Length & Area & Weight per piece

Mark	Profile	Grade	QTY	Length	Area	Weight
W830	PL10*156	S355JR	1	196.5	0.05	1.7

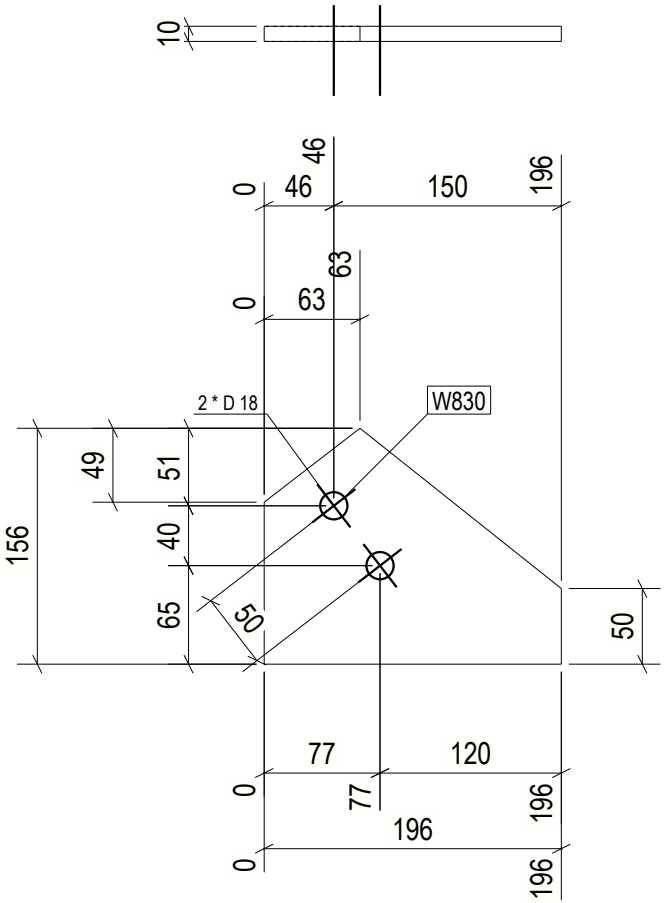

approval is subject to approval of coordination package between multi-discipline

REVIEWED WITH COMMENT MONORAILS PROJECT

1 REQ'D AS DRAWN MK'D W830

6 October Monorail Engineering Unit Valid For Construction

GENERAL NOTES:

1. THE DIMENSIONS SHOWN ARE NOMINAL (IN MILLIMETERS), U.N.O.
2. WELD SIZESHALL BE AISC MINIMUM OF 6 mm UNLESS NOTED OTHERWISE.
3. ALL FIELD WELDS SHALL BE INSPECTED PER QUALITY ASSURANCE AND SPECIAL INSPECTIONS.

REFERENCE DRAWINGS

1	93M-BOA-NAT-LOT-04833
2	93M-BOA-NAT-LOT-09170
3	93M-BOA-NAT-LOT-01976
4	93M-BOA-NAT-LOT-20021
5	
6	
7	
8	
9	

6TH OF OCTOBER CITY RAIL TRANSIT MONORAIL

The Authority | Hill International Consultant | Main Contractor | Structural Designer

KEY PLAN:

REV.	DATE	DSG	CHK	APP	AMENDMENTS	STATUS
B	12/05/2023	M.KH	M.KH	DR.M.M	ISSUED FOR INFORMATION	IFI
A	11/20/2022	M.KH	M.KH	DR.M.M	ISSUED FOR INFORMATION	IFI

SCALE: AS SHOWN | SHOPDRAWING | DATE: 12/05/2023

DRAWING TITLE

6TH OF OCTOBER MONORAIL
SERVICE WALKWAYS
ZONE (1008)
W830

Project Code	Rubric	Initiator	Lot	Ref	Number	Revision
93M0476	ACC60	DEP	DWG	0874	0	B

Tekla structures

All holes are 22mm U.N.O Length & Area & Weight per piece						
W829	PL10*156	S355JR	1	193.7	0.05	1.7
Mark	Profile	Grade	QTY	Length	Area	Weight

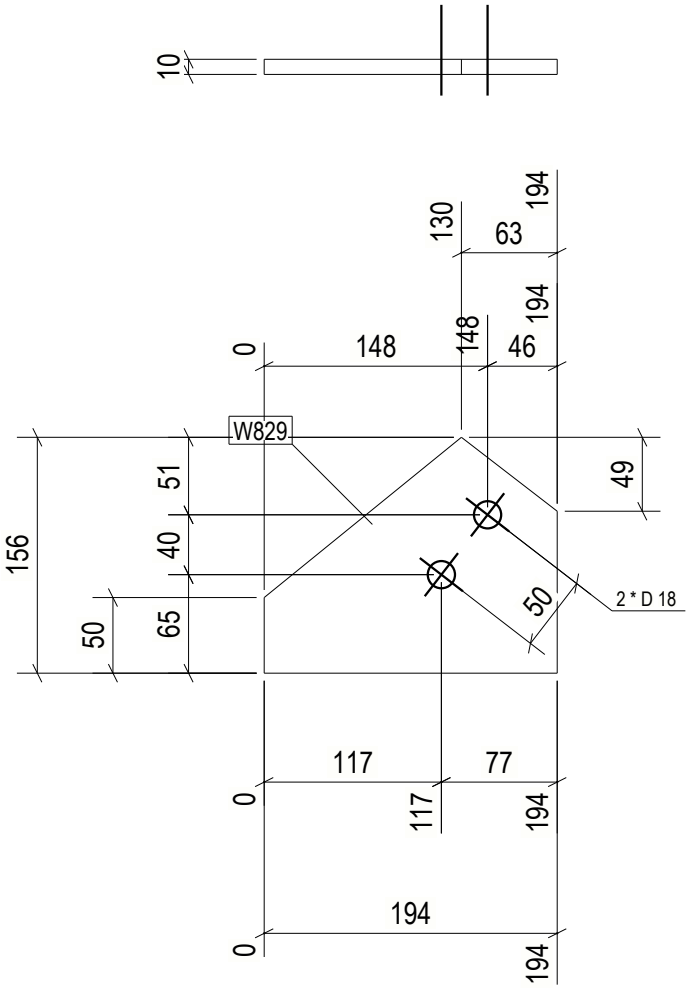

approval is subject to approval of coordination package between multi-discipline

REVIEWED WITH COMMENT MONORAILS PROJECT

1 REQ'D AS DRAWN MK'D W829

6 October Monorail Engineering Unit Valid For Construction

GENERAL NOTES:

1. THE DIMENSIONS SHOWN ARE NOMINAL (IN MILLIMETERS), U.N.O.
2. WELD SIZESHALL BE AISC MINIMUM OF 6 mm UNLESS NOTED OTHERWISE.
3. ALL FIELD WELDS SHALL BE INSPECTED PER QUALITY ASSURANCE AND SPECIAL INSPECTIONS.

REFERENCE DRAWINGS

1	93M-BOA-NAT-LOT-04833
2	93M-BOA-NAT-LOT-09170
3	93M-BOA-NAT-LOT-01976
4	93M-BOA-NAT-LOT-20021
5	
6	
7	
8	
9	

6TH OF OCTOBER CITY RAIL TRANSIT MONORAIL

The Authority | Hill International Consultant | Main Contractor | Structural Designer

KEY PLAN:

REV.	DATE	DSG	CHK	APP	AMENDMENTS	STATUS
B	12/05/2023	M.KH	M.KH	DR.M.M	ISSUED FOR INFORMATION	IFI
A	11/20/2022	M.KH	M.KH	DR.M.M	ISSUED FOR INFORMATION	IFI

SCALE AS SHOWN | SHOPDRAWING | DATE 12/05/2023

DRAWING TITLE
6TH OF OCTOBER MONORAIL
SERVICE WALKWAYS
ZONE (1008)
W829

Project Code	Rubric	Initiator	Lot	Ref	Number	Revision
93M	047	ACC	60	DEP	DWG	0874	1	B

Tekla structures

All holes are 22mm U.N.O Length & Area & Weight per piece						
W827	PL10*156	S355JR	2	195.0	0.05	1.7
Mark	Profile	Grade	QTY	Length	Area	Weight

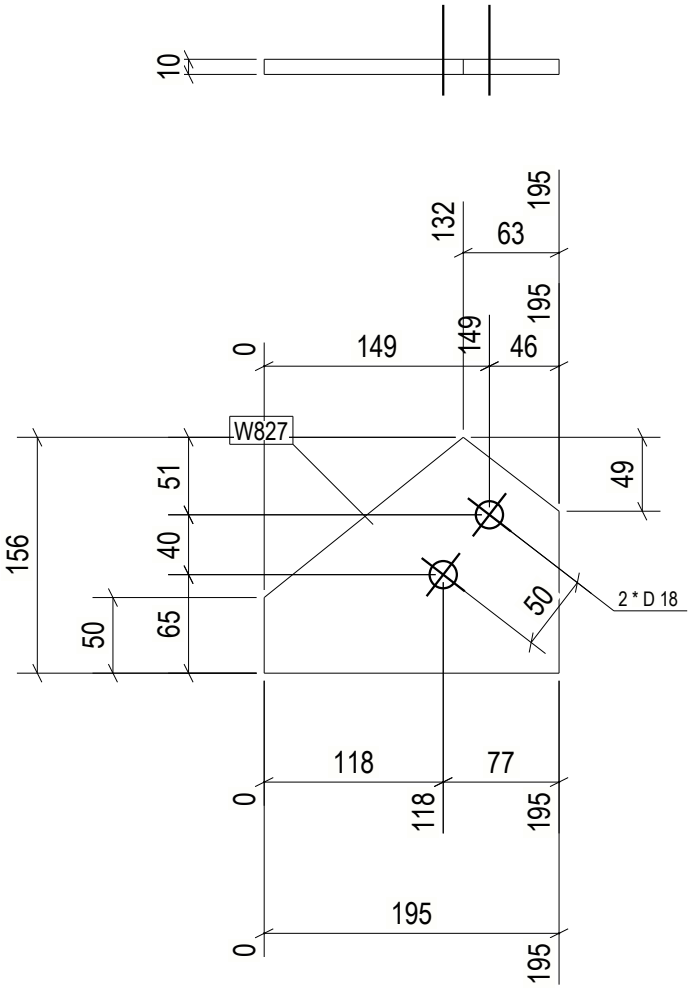

approval is subject to approval of coordination package between multi-discipline

REVIEWED WITH COMMENT MONORAILS PROJECT

2 REQ'D AS DRAWN MK'D W827

6 October Monorail Engineering Unit Valid For Construction

GENERAL NOTES:

1. THE DIMENSIONS SHOWN ARE NOMINAL (IN MILLIMETERS), U.N.O.
2. WELD SIZESHALL BE AISC MINIMUM OF 6 mm UNLESS NOTED OTHERWISE.
3. ALL FIELD WELDS SHALL BE INSPECTED PER QUALITY ASSURANCE AND SPECIAL INSPECTIONS.

REFERENCE DRAWINGS

1	93M-BOA-NAT-LOT-04833
2	93M-BOA-NAT-LOT-09170
3	93M-BOA-NAT-LOT-01976
4	93M-BOA-NAT-LOT-20021
5	
6	
7	
8	
9	

6TH OF OCTOBER CITY RAIL TRANSIT MONORAIL

The Authority | Hill International Consultant | Main Contractor | Structural Designer

KEY PLAN:

SCALE: AS SHOWN | SHOPDRAWING | DATE: 12/09/2023

REV.	DATE	DSG	CHK	APP	AMENDMENTS	STATUS
B	12/05/2023	M.KH	M.KH	DR.M.M	ISSUED FOR INFORMATION	IFI
A	11/20/2022	M.KH	M.KH	DR.M.M	ISSUED FOR INFORMATION	IFI

DRAWING TITLE

6TH OF OCTOBER MONORAIL
SERVICE WALKWAYS
ZONE (1008)
W827

Project Code	Rubric	Initiator	Lot	Ref	Number	Revision
93M	047	ACC	60	DEP	DWG	0874	2	B

Tekla structures

All holes are 22mm U.N.O Length & Area & Weight per piece

Mark	Profile	Grade	QTY	Length	Area	Weight
W824	PL10*151.6	S355JR	1	264.6	0.06	2.2

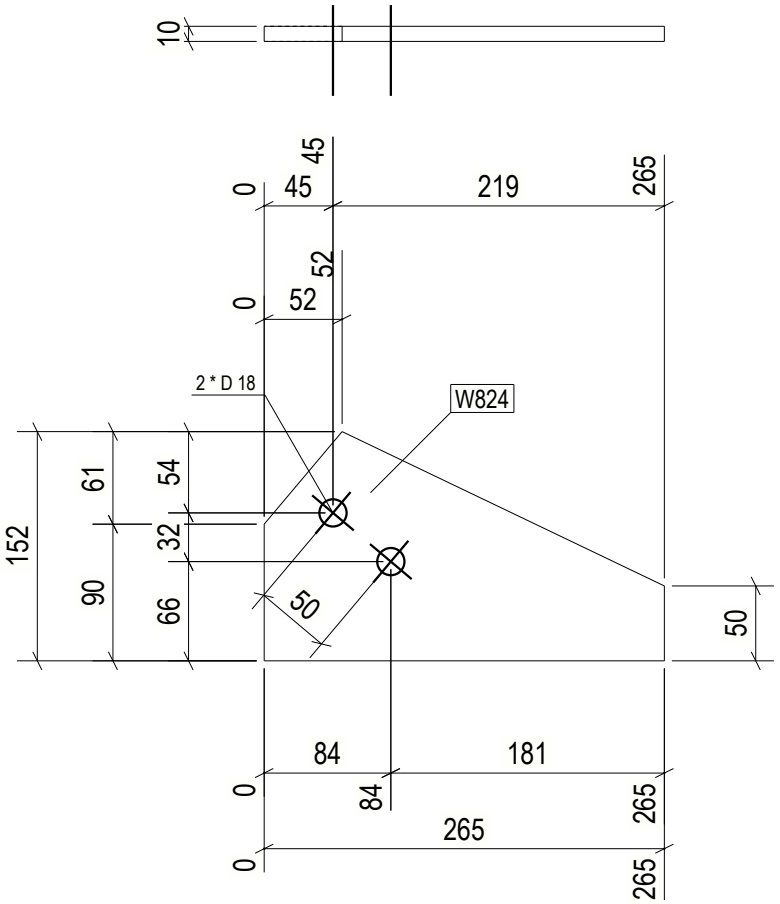

approval is subject to approval of coordination package between multi-discipline

REVIEWED WITH COMMENT
MONORAILS PROJECT

1 REQ'D AS DRAWN MK'D W824

6 October Monorail
Engineering Unit
Valid For Construction

GENERAL NOTES:

1. THE DIMENSIONS SHOWN ARE NOMINAL (IN MILLIMETERS), U.N.O.
2. WELD SIZESHALL BE AISC MINIMUM OF 6 mm UNLESS NOTED OTHERWISE.
3. ALL FIELD WELDS SHALL BE INSPECTED PER QUALITY ASSURANCE AND SPECIAL INSPECTIONS.

REFERENCE DRAWINGS

1	93M-BOA-NAT-LOT-04833
2	93M-BOA-NAT-LOT-09170
3	93M-BOA-NAT-LOT-01976
4	93M-BOA-NAT-LOT-20021
5	
6	
7	
8	
9	

6TH OF OCTOBER CITY RAIL TRANSIT MONORAIL

The Authority | Hill International Consultant | Main Contractor | Structural Designer

KEY PLAN:

REV	DATE	DSG	CHK	APP	AMENDMENTS	STATUS
B	12/05/2023	M.KH	M.KH	DR.M.M	ISSUED FOR INFORMATION	IFI
A	11/20/2022	M.KH	M.KH	DR.M.M	ISSUED FOR INFORMATION	IFI

SCALE: AS SHOWN | SHOPDRAWING | DATE: 12/05/2023

DRAWING TITLE
6TH OF OCTOBER MONORAIL
SERVICE WALKWAYS
ZONE (1008)
W824

Project Code	Rubric	Initiator	Lot	Ref	Number	Revision
93M	047	6ACC	60DE	PDWG	0743	B

Tekla structures

approval is subject to approval of coordination package between multi-discipline

REVIEWED WITH COMMENT
MONORAILS PROJECT

All holes are 22mm U.N.O Length & Area & Weight per piece

Mark	Profile	Grade	QTY	Length	Area	Weight
W823	PL10*151.6	S355JR	1	266.4	0.06	2.2

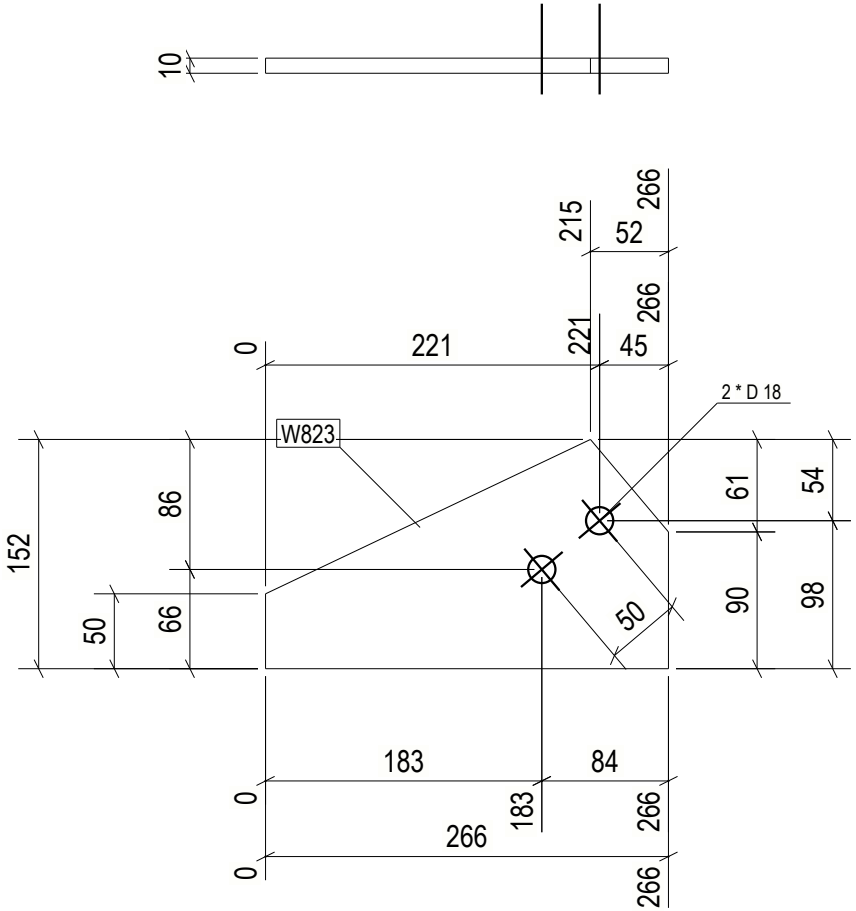

1 REQ'D AS DRAWN MK'D W823

6 October Monorail
Engineering Unit
Valid For Construction

GENERAL NOTES:

1. THE DIMENSIONS SHOWN ARE NOMINAL (IN MILLIMETERS), U.N.O.
2. WELD SIZESHALL BE AISC MINIMUM OF 6 mm UNLESS NOTED OTHERWISE.
3. ALL FIELD WELDS SHALL BE INSPECTED PER QUALITY ASSURANCE AND SPECIAL INSPECTIONS.

REFERENCE DRAWINGS

1	93M-BOA-NAT-LOT-04833
2	93M-BOA-NAT-LOT-09170
3	93M-BOA-NAT-LOT-01976
4	93M-BOA-NAT-LOT-20021
5	
6	
7	
8	
9	

6TH OF OCTOBER CITY RAIL TRANSIT MONORAIL

The Authority | Hill International Consultant | Main Contractor | Structural Designer

KEY PLAN:

REV	DATE	DSG	CHK	APP	AMENDMENTS	STATUS
B	12/05/2023	M.KH	M.KH	DR.BM	ISSUED FOR INFORMATION	IFI
A	11/20/2022	M.KH	M.KH	DR.BM	ISSUED FOR INFORMATION	IFI

SCALE: AS SHOWN | SHOPDRAWING | DATE: 12/05/2023

DRAWING TITLE
6TH OF OCTOBER MONORAIL
SERVICE WALKWAYS
ZONE (1008)
W823

Project Code	Rubric	Initiator	Lot	Ref	Number	Revision
9 3 M	0 4 7 6	A C C	6 0 D E P	D W G	0 8 7 4 4	B

Tekla structures

approval is subject to approval of coordination package between multi-discipline

REVIEWED WITH COMMENT
MONORAILS PROJECT

All holes are 22mm U.N.O Length & Area & Weight per piece

Mark	Profile	Grade	QTY	Length	Area	Weight
W820	PL8*169.1	S355-JR	1	243.7	0.07	2.1

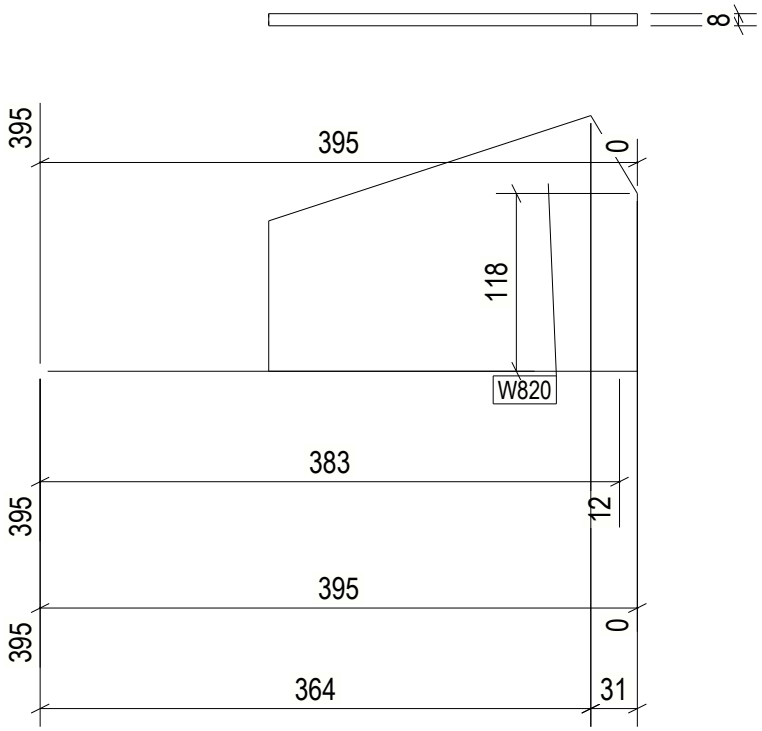

1 REQ'D AS DRAWN MK'D W820

6 October Monorail
Engineering Unit
Valid For Construction

GENERAL NOTES:

1. THE DIMENSIONS SHOWN ARE NOMINAL (IN MILLIMETERS), U.N.O.
2. WELD SIZESHALL BE AISC MINIMUM OF 6 mm UNLESS NOTED OTHERWISE.
3. ALL FIELD WELDS SHALL BE INSPECTED PER QUALITY ASSURANCE AND SPECIAL INSPECTIONS.

REFERENCE DRAWINGS

1	93M-BOA-NAT-LOT-04833
2	93M-BOA-NAT-LOT-09170
3	93M-BOA-NAT-LOT-01976
4	93M-BOA-NAT-LOT-20021
5	
6	
7	
8	
9	

6TH OF OCTOBER CITY RAIL TRANSIT MONORAIL

The Authority | Hill International Consultant | Main Contractor | Structural Designer

KEY PLAN:

REV.	DATE	DSG	CHK	APP	AMENDMENTS	STATUS
B	12/05/2023	M.KH	M.KH	DR.M.M	ISSUED FOR INFORMATION	IFI
A	11/20/2022	M.KH	M.KH	DR.M.M	ISSUED FOR INFORMATION	IFI

SCALE: AS SHOWN | SHOPDRAWING | DATE: 12/05/2023

DRAWING TITLE
6TH OF OCTOBER MONORAIL
SERVICE WALKWAYS
ZONE (1008)
W820

Project Code	Rubric	Initiator	Lot	Ref	Number	Revision
9 3 M	0 4 7 6	A C C	6 0 D	E P	D W G	0 8 7 4 5	B

Tekla structures

All holes are 22mm U.N.O Length & Area & Weight per piece

Mark	Profile	Grade	QTY	Length	Area	Weight
W819	ROD12	S355JR	11	879.3	0.03	0.7

approval is subject to approval of coordination package between multi-discipline

REVIEWED WITH COMMENT
MONORAILS PROJECT

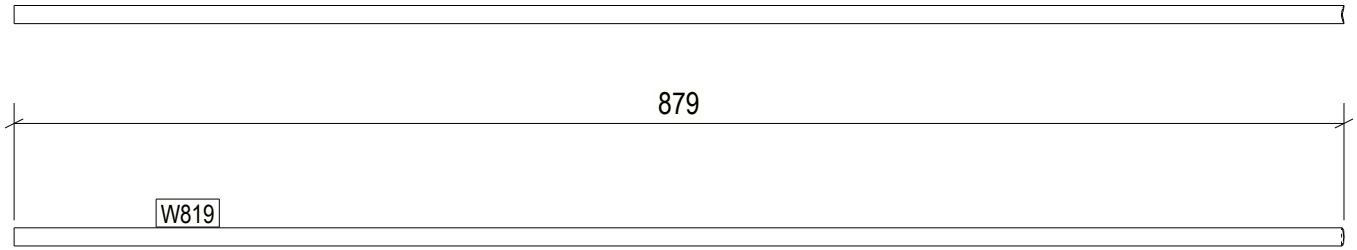

11 REQ'D AS DRAWN MK'D W819

6 October Monorail
Engineering Unit
Valid For Construction

GENERAL NOTES:

1. THE DIMENSIONS SHOWN ARE NOMINAL (IN MILLIMETERS), U.N.O.
2. WELD SIZESHALL BE AISC MINIMUM OF 6 mm UNLESS NOTED OTHERWISE.
3. ALL FIELD WELDS SHALL BE INSPECTED PER QUALITY ASSURANCE AND SPECIAL INSPECTIONS.

REFERENCE DRAWINGS

1	93M-BOA-NAT-LOT-04833
2	93M-BOA-NAT-LOT-09170
3	93M-BOA-NAT-LOT-01976
4	93M-BOA-NAT-LOT-20021
5	
6	
7	
8	
9	

6TH OF OCTOBER CITY RAIL TRANSIT MONORAIL

The Authority | Hill International Consultant | Main Contractor | Structural Designer

KEY PLAN:

REV.	DATE	DSG	CHK	APP	AMENDMENTS	STATUS
B	12/05/2023	M.KH	M.KH	DR.M.M	ISSUED FOR INFORMATION	IFI
A	11/20/2022	M.KH	M.KH	DR.M.M	ISSUED FOR INFORMATION	IFI

SCALE: AS SHOWN | SHOPDRAWING | DATE: 12/05/2023

DRAWING TITLE
6TH OF OCTOBER MONORAIL
SERVICE WALKWAYS
ZONE (1008)
W819

Project Code	Rubric	Initiator	Lot	Ref	Number	Revision
9 3 M	0 4 7 6	A C C	6 0 D E	P D W	G 0 8 7 4 6	B

Tekla structures

All holes are 22mm U.N.O Length & Area & Weight per piece						
W818	PL8*50	S355JR	1	70.0	0.01	0.2
Mark	Profile	Grade	QTY	Length	Area	Weight

approval is subject to approval of coordination package between multi-discipline

REVIEWED WITH COMMENT MONORAILS PROJECT

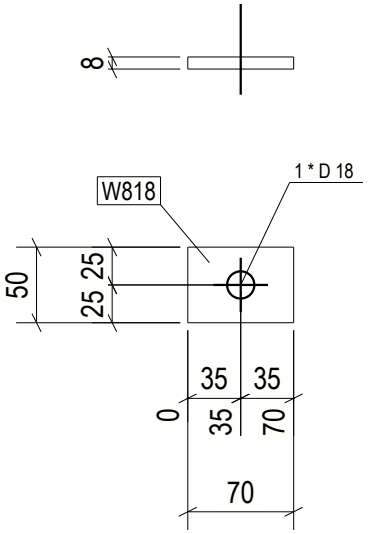

1 REQ'D AS DRAWN MK'D W818

6 October Monorail Engineering Unit
Valid For Construction

GENERAL NOTES:

1. THE DIMENSIONS SHOWN ARE NOMINAL (IN MILLIMETERS), U.N.O.
2. WELD SIZESHALL BE AISC MINIMUM OF 6 mm UNLESS NOTED OTHERWISE.
3. ALL FIELD WELDS SHALL BE INSPECTED PER QUALITY ASSURANCE AND SPECIAL INSPECTIONS.

REFERENCE DRAWINGS

1	93M-BOA-NAT-LOT-04833
2	93M-BOA-NAT-LOT-09170
3	93M-BOA-NAT-LOT-01976
4	93M-BOA-NAT-LOT-20021
5	
6	
7	
8	
9	

6TH OF OCTOBER CITY RAIL TRANSIT MONORAIL

The Authority — Hill International Consultant — Main Contractor — Structural Designer

KEY PLAN:

SCALE	SHOPDRAWING	DATE
AS SHOWN		12/05/2023

REV	DATE	DSG	CHK	APP	AMENDMENTS	STATUS
B	12/05/2023	M.KH	M.KH	DR.M.M	ISSUED FOR INFORMATION	IFI
A	11/20/2022	M.KH	M.KH	DR.M.M	ISSUED FOR INFORMATION	IFI

DRAWING TITLE

6TH OF OCTOBER MONORAIL SERVICE WALKWAYS ZONE (1008) W818

Project Code	Rubric	Initiator	Lot	Ref	Number	Revision
93M	0476	ACC	60DEP	DWG	08747	B

Tekla structures

All holes are 22mm U.N.O Length & Area & Weight per piece						
W816	PL10*155.9	S355JR	6	176.2	0.05	1.6
Mark	Profile	Grade	QTY	Length	Area	Weight

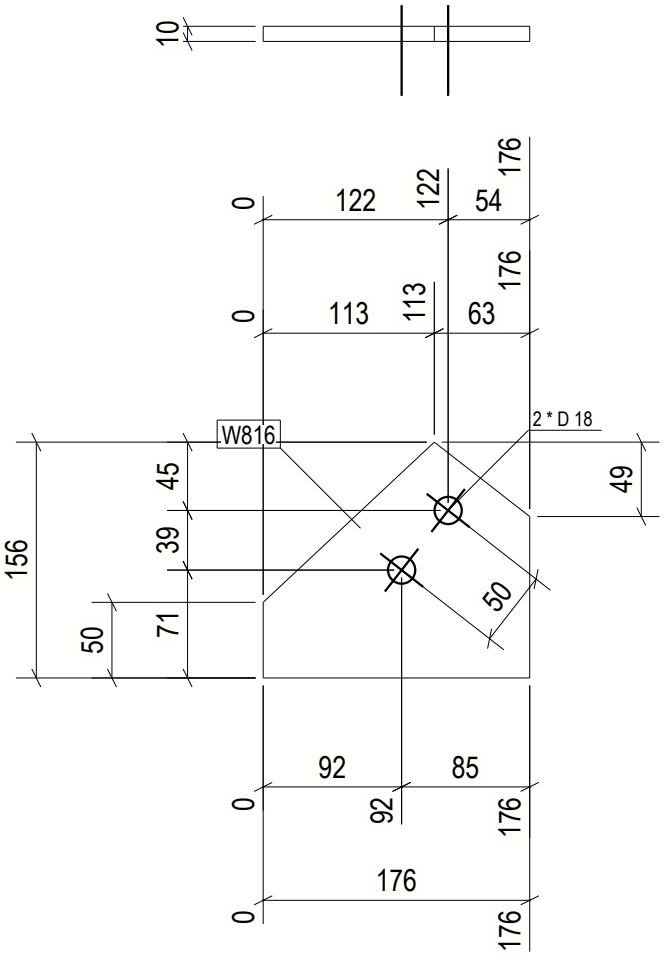

approval is subject to approval of coordination package between multi-discipline

REVIEWED WITH COMMENT MONORAILS PROJECT

6 REQ'D AS DRAWN MK'D W816

6 October Monorail Engineering Unit Valid For Construction

GENERAL NOTES:

1. THE DIMENSIONS SHOWN ARE NOMINAL (IN MILLIMETERS), U.N.O.
2. WELD SIZESHALL BE AISC MINIMUM OF 6 mm UNLESS NOTED OTHERWISE.
3. ALL FIELD WELDS SHALL BE INSPECTED PER QUALITY ASSURANCE AND SPECIAL INSPECTIONS.

REFERENCE DRAWINGS

1	93M-BOA-NAT-LOT-04833
2	93M-BOA-NAT-LOT-09170
3	93M-BOA-NAT-LOT-01976
4	93M-BOA-NAT-LOT-20021
5	
6	
7	
8	
9	

6TH OF OCTOBER CITY RAIL TRANSIT MONORAIL

The Authority — Hill International Consultant — Main Contractor — Structural Designer

KEY PLAN:

SCALE: AS SHOWN | SHOPDRAWING | DATE: 12/09/2023

REV	DATE	DSG	CHK	APP	AMENDMENTS	STATUS
B	12/05/2023	M.KH	M.KH	DR.IBM	ISSUED FOR INFORMATION	IFI
A	11/20/2022	M.KH	M.KH	DR.IBM	ISSUED FOR INFORMATION	IFI

DRAWING TITLE

6TH OF OCTOBER MONORAIL
SERVICE WALKWAYS
ZONE (1008)
W816

Project Code	Rubric	Initiator	Lot	Ref	Number	Revision
9 3 M	0 4 7 6	A C	C 6 0 D	E P	D W G	0 8 7 4 8	B

Tekla structures

approval is subject to approval of coordination package between multi-discipline

REVIEWED WITH COMMENT
MONORAILS PROJECT

All holes are 22mm U.N.O Length & Area & Weight per piece

Mark	Profile	Grade	QTY	Length	Area	Weight
W808	PL16*100	S355JR	1	160.0	0.04	2.0

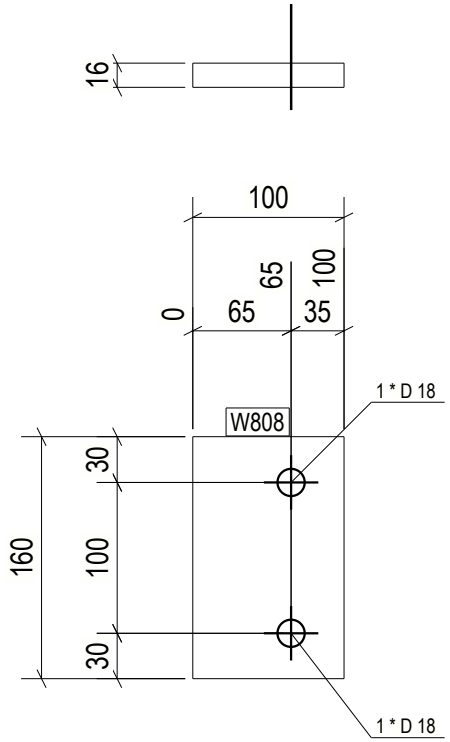

1 REQ'D AS DRAWN MK'D W808

6 October Monorail
Engineering Unit
Valid For Construction

GENERAL NOTES:

1. THE DIMENSIONS SHOWN ARE NOMINAL (IN MILLIMETERS), U.N.O.
2. WELD SIZESHALL BE AISC MINIMUM OF 6 mm UNLESS NOTED OTHERWISE.
3. ALL FIELD WELDS SHALL BE INSPECTED PER QUALITY ASSURANCE AND SPECIAL INSPECTIONS.

REFERENCE DRAWINGS

1	93M-BOA-NAT-LOT-04833
2	93M-BOA-NAT-LOT-09170
3	93M-BOA-NAT-LOT-01976
4	93M-BOA-NAT-LOT-20021
5	
6	
7	
8	
9	

6TH OF OCTOBER CITY RAIL TRANSIT MONORAIL

The Authority | Hill International Consultant | Main Contractor | Structural Designer

KEY PLAN:

REV.	DATE	DSG	CHK	APP	AMENDMENTS	STATUS
B	12/05/2023	M.KH	M.KH	DR.BM	ISSUED FOR INFORMATION	IFI
A	11/20/2022	M.KH	M.KH	DR.BM	ISSUED FOR INFORMATION	IFI

SCALE AS SHOWN | SHOPDRAWING | DATE 12/05/2023

DRAWING TITLE
6TH OF OCTOBER MONORAIL
SERVICE WALKWAYS
ZONE (1008)
W808

Project Code	Rubric	Initiator	Lot	Ref	Number	Revision
9 3 M	0 4 7 6	A C C	6 0 D	E P	D W G	0 8 7 4 9	B

Tekla structures

approval is subject to approval of coordination package between multi-discipline

REVIEWED WITH COMMENT
MONORAILS PROJECT

All holes are 22mm U.N.O Length & Area & Weight per piece

Mark	Profile	Grade	QTY	Length	Area	Weight
W796	PL16*100	S355JR	1	160.0	0.04	2.0

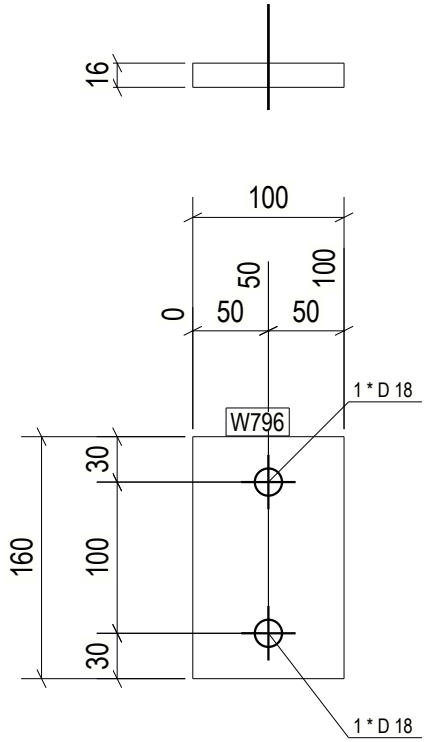

1 REQ'D AS DRAWN MK'D W796

6 October Monorail
Engineering Unit
Valid For Construction

GENERAL NOTES:

1. THE DIMENSIONS SHOWN ARE NOMINAL (IN MILLIMETERS), U.N.O.
2. WELD SIZESHALL BE AISC MINIMUM OF 6 mm UNLESS NOTED OTHERWISE.
3. ALL FIELD WELDS SHALL BE INSPECTED PER QUALITY ASSURANCE AND SPECIAL INSPECTIONS.

REFERENCE DRAWINGS

1	93M-BOA-NAT-LOT-04833
2	93M-BOA-NAT-LOT-09170
3	93M-BOA-NAT-LOT-01976
4	93M-BOA-NAT-LOT-20021
5	
6	
7	
8	
9	

6TH OF OCTOBER CITY RAIL TRANSIT MONORAIL

The Authority | Hill International Consultant | Main Contractor | Structural Designer

KEY PLAN:

SCALE	SHOPDRAWING	DATE
AS SHOWN		12/09/2023

REV	DATE	DSG	CHK	APP	AMENDMENTS	STATUS
B	12/05/2023	M.KH	M.KH	DR.BM	ISSUED FOR INFORMATION	IFI
A	11/20/2022	M.KH	M.KH	DR.BM	ISSUED FOR INFORMATION	IFI

DRAWING TITLE

6TH OF OCTOBER MONORAIL
SERVICE WALKWAYS
ZONE (1008)
W796

Project Code	Rubric	Initiator	Lot	Ref	Number	Revision
93M	047	6ACC	60DE	PDWG	0875	B

Tekla structures

approval is subject to approval of coordination package between multi-discipline

REVIEWED WITH COMMENT
MONORAILS PROJECT

All holes are 22mm U.N.O Length & Area & Weight per piece

Mark	Profile	Grade	QTY	Length	Area	Weight
W795	PL16*100	S355JR	1	160.0	0.04	2.0

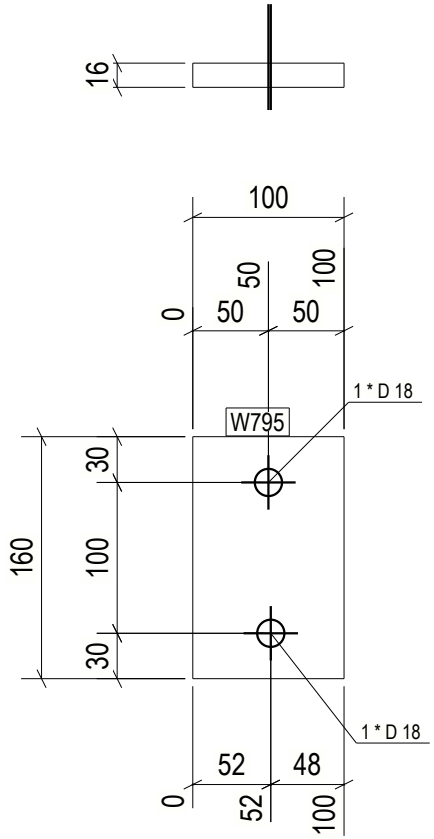

1 REQ'D AS DRAWN MK'D W795

6 October Monorail
Engineering Unit
Valid For Construction

GENERAL NOTES:

1. THE DIMENSIONS SHOWN ARE NOMINAL (IN MILLIMETERS), U.N.O.
2. WELD SIZESHALL BE AISC MINIMUM OF 6 mm UNLESS NOTED OTHERWISE.
3. ALL FIELD WELDS SHALL BE INSPECTED PER QUALITY ASSURANCE AND SPECIAL INSPECTIONS.

REFERENCE DRAWINGS

1	93M-BOA-NAT-LOT-04833
2	93M-BOA-NAT-LOT-09170
3	93M-BOA-NAT-LOT-01976
4	93M-BOA-NAT-LOT-20021
5	
6	
7	
8	
9	

6TH OF OCTOBER CITY RAIL TRANSIT MONORAIL

The Authority | Hill International Consultant | Main Contractor | Structural Designer

KEY PLAN:

REV.	DATE	DSG	CHK	APP	AMENDMENTS	STATUS
B	12/05/2023	M.KH	M.KH	DR.BM	ISSUED FOR INFORMATION	IFI
A	11/20/2022	M.KH	M.KH	DR.BM	ISSUED FOR INFORMATION	IFI

SCALE: AS SHOWN | SHOPDRAWING | DATE: 12/05/2023

DRAWING TITLE
6TH OF OCTOBER MONORAIL
SERVICE WALKWAYS
ZONE (1008)
W795

Project Code	Rubric	Initiator	Lot	Ref	Number	Revision
9 3 M	0 4 7 6	A C C	6 0 D	E P	D W G	0 8 7 5 1	B

Tekla structures

approval is subject to approval of coordination package between multi-discipline

REVIEWED WITH COMMENT
MONORAILS PROJECT

All holes are 22mm U.N.O Length & Area & Weight per piece

Mark	Profile	Grade	QTY	Length	Area	Weight
W793	PL10*80	S355JR	8	150.0	0.03	0.9

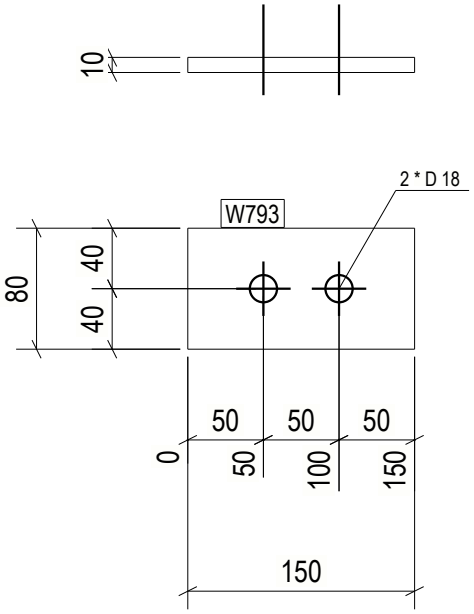

8 REQ'D AS DRAWN MK'D W793

6 October Monorail
Engineering Unit
Valid For Construction

GENERAL NOTES:

1. THE DIMENSIONS SHOWN ARE NOMINAL (IN MILLIMETERS), U.N.O.
2. WELD SIZESHALL BE AISC MINIMUM OF 6 mm UNLESS NOTED OTHERWISE.
3. ALL FIELD WELDS SHALL BE INSPECTED PER QUALITY ASSURANCE AND SPECIAL INSPECTIONS.

REFERENCE DRAWINGS

1	93M-BOA-NAT-LOT-04833
2	93M-BOA-NAT-LOT-09170
3	93M-BOA-NAT-LOT-01976
4	93M-BOA-NAT-LOT-20021
5	
6	
7	
8	
9	

6TH OF OCTOBER CITY RAIL TRANSIT MONORAIL

The Authority | Hill International Consultant | Main Contractor | Structural Designer

KEY PLAN:

REV.	DATE	DSG	CHK	APP	AMENDMENTS	STATUS
B	12/05/2023	M.KH	M.KH	DR.M.M	ISSUED FOR INFORMATION	IFI
A	11/20/2022	M.KH	M.KH	DR.M.M	ISSUED FOR INFORMATION	IFI

SCALE: AS SHOWN | SHOPDRAWING | DATE: 12/05/2023

DRAWING TITLE
6TH OF OCTOBER MONORAIL
SERVICE WALKWAYS
ZONE (1008)
W793

Project Code	Rubric	Initiator	Lot	Ref	Number	Revision
9 3 M	0 4 7 6	A C C	6 0 D	E P	D W G	0 8 7 5 2	B

Tekla structures

approval is subject to approval of coordination package between multi-discipline

REVIEWED WITH COMMENT
MONORAILS PROJECT

All holes are 22mm U.N.O Length & Area & Weight per piece

Mark	Profile	Grade	QTY	Length	Area	Weight
W784	PL8*50	S355JR	1	70.0	0.01	0.2

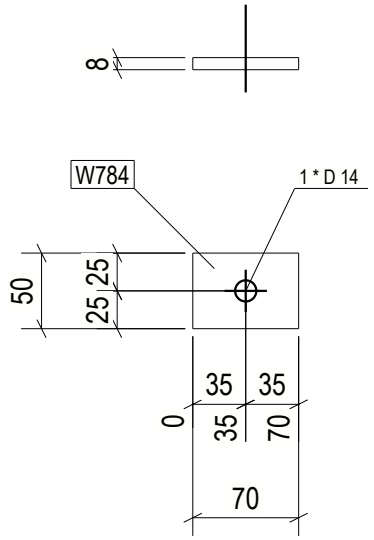

1 REQ'D AS DRAWN MK'D W784

6 October Monorail
Engineering Unit
Valid For Construction

GENERAL NOTES:

1. THE DIMENSIONS SHOWN ARE NOMINAL (IN MILLIMETERS), U.N.O.
2. WELD SIZESHALL BE AISC MINIMUM OF 6 mm UNLESS NOTED OTHERWISE.
3. ALL FIELD WELDS SHALL BE INSPECTED PER QUALITY ASSURANCE AND SPECIAL INSPECTIONS.

REFERENCE DRAWINGS

1	93M-BOA-NAT-LOT-04833
2	93M-BOA-NAT-LOT-09170
3	93M-BOA-NAT-LOT-01976
4	93M-BOA-NAT-LOT-20021
5	
6	
7	
8	
9	

6TH OF OCTOBER CITY RAIL TRANSIT MONORAIL

The Authority | Hill International Consultant | Main Contractor | Structural Designer

KEY PLAN:

REV.	DATE	DSG	CHK	APP	AMENDMENTS	STATUS
B	12/05/2023	M.KH	M.KH	DR.M.M	ISSUED FOR INFORMATION	IFI
A	11/20/2022	M.KH	M.KH	DR.M.M	ISSUED FOR INFORMATION	IFI

SCALE: AS SHOWN | SHOPDRAWING | DATE: 12/05/2023

DRAWING TITLE
6TH OF OCTOBER MONORAIL
SERVICE WALKWAYS
ZONE (1008)
W784

Project Code	Rubric	Initiator	Lot	Ref	Number	Revision
9 3 M 0 4 7 6	A C C	6 0 D E P	D W G	0 8 7 5 3		B

Tekla structures

approval is subject to approval of coordination package between multi-discipline

REVIEWED WITH COMMENT
MONORAILS PROJECT

All holes are 22mm U.N.O Length & Area & Weight per piece

Mark	Profile	Grade	QTY	Length	Area	Weight
W776	PL12*65	S355JR	1	190.0	0.03	1.2

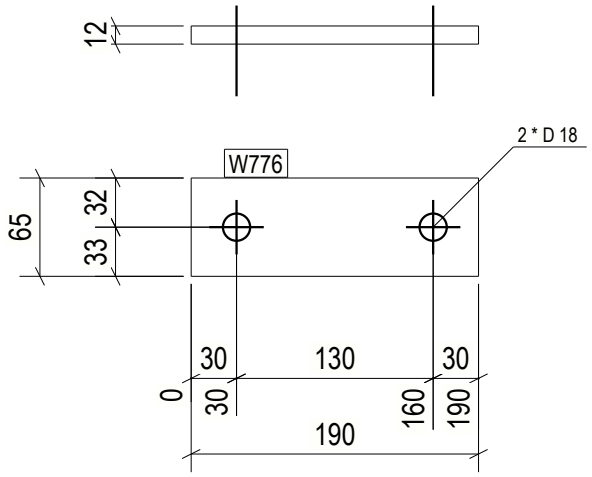

1 REQ'D AS DRAWN MK'D W776

6 October Monorail
Engineering Unit
Valid For Construction

GENERAL NOTES:

1. THE DIMENSIONS SHOWN ARE NOMINAL (IN MILLIMETERS), U.N.O.
2. WELD SIZESHALL BE AISC MINIMUM OF 6 mm UNLESS NOTED OTHERWISE.
3. ALL FIELD WELDS SHALL BE INSPECTED PER QUALITY ASSURANCE AND SPECIAL INSPECTIONS.

REFERENCE DRAWINGS

1	93M-BOA-NAT-LOT-04833
2	93M-BOA-NAT-LOT-09170
3	93M-BOA-NAT-LOT-01976
4	93M-BOA-NAT-LOT-20021
5	
6	
7	
8	
9	

6TH OF OCTOBER CITY RAIL TRANSIT MONORAIL

The Authority | Hill International Consultant | Main Contractor | Structural Designer

KEY PLAN:

REV.	DATE	DSG	CHK	APP	AMENDMENTS	STATUS
B	12/05/2023	M.KH	M.KH	DR.M.M	ISSUED FOR INFORMATION	IFI
A	11/20/2022	M.KH	M.KH	DR.M.M	ISSUED FOR INFORMATION	IFI

SCALE: AS SHOWN | SHOPDRAWING | DATE: 12/05/2023

DRAWING TITLE
6TH OF OCTOBER MONORAIL
SERVICE WALKWAYS
ZONE (1008)
W776

Project Code	Rubric	Initiator	Lot	Ref	Number	Revision
9 3 M	0 4 7 6	A C C	6 0 D E P	D W G	0 8 7 5 4	B

Tekla structures

approval is subject to approval of coordination package between multi-discipline

REVIEWED WITH COMMENT
MONORAILS PROJECT

All holes are 22mm U.N.O Length & Area & Weight per piece

Mark	Profile	Grade	QTY	Length	Area	Weight
W775	PL12*65	S355JR	1	190.0	0.03	1.2

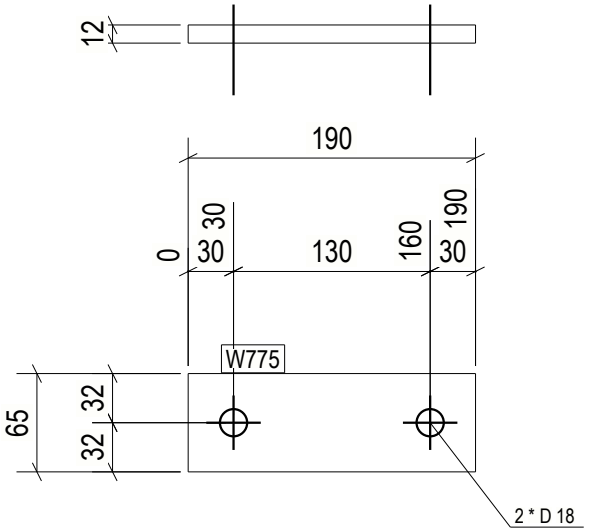

1 REQ'D AS DRAWN MK'D W775

6 October Monorail
Engineering Unit
Valid For Construction

GENERAL NOTES:

1. THE DIMENSIONS SHOWN ARE NOMINAL (IN MILLIMETERS), U.N.O.
2. WELD SIZESHALL BE AISC MINIMUM OF 6 mm UNLESS NOTED OTHERWISE.
3. ALL FIELD WELDS SHALL BE INSPECTED PER QUALITY ASSURANCE AND SPECIAL INSPECTIONS.

REFERENCE DRAWINGS

1	93M-BOA-NAT-LOT-04833
2	93M-BOA-NAT-LOT-09170
3	93M-BOA-NAT-LOT-01976
4	93M-BOA-NAT-LOT-20021
5	
6	
7	
8	
9	

6TH OF OCTOBER CITY RAIL TRANSIT MONORAIL

The Authority | Hill International Consultant | Main Contractor | Structural Designer

KEY PLAN:

SCALE: AS SHOWN | SHOPDRAWING | DATE: 12/09/2023

REV	DATE	DSG	CHK	APP	AMENDMENTS	STATUS
B	12/05/2023	M.KH	M.KH	DR.M.M	ISSUED FOR INFORMATION	IFI
A	11/20/2022	M.KH	M.KH	DR.M.M	ISSUED FOR INFORMATION	IFI

DRAWING TITLE

6TH OF OCTOBER MONORAIL
SERVICE WALKWAYS
ZONE (1008)
W775

Project Code	Rubric	Initiator	Lot	Ref	Number	Revision
93M	047	ACC	60DEP	DWG	08755	B

Tekla structures

approval is subject to approval of coordination package between multi-discipline

REVIEWED WITH COMMENT
MONORAILS PROJECT

All holes are 22mm U.N.O Length & Area & Weight per piece

Mark	Profile	Grade	QTY	Length	Area	Weight
W774	CHS48.3*4.0	S235JR	1	317.1	0.05	1.4

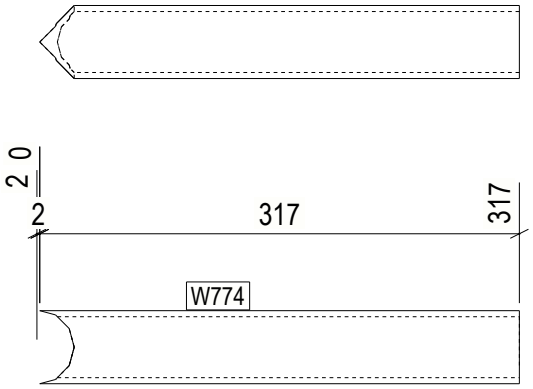

1 REQ'D AS DRAWN MK'D W774

6 October Monorail
Engineering Unit
Valid For Construction

GENERAL NOTES:

1. THE DIMENSIONS SHOWN ARE NOMINAL (IN MILLIMETERS), U.N.O.
2. WELD SIZESHALL BE AISC MINIMUM OF 6 mm UNLESS NOTED OTHERWISE.
3. ALL FIELD WELDS SHALL BE INSPECTED PER QUALITY ASSURANCE AND SPECIAL INSPECTIONS.

REFERENCE DRAWINGS

1	93M-BOA-NAT-LOT-04833
2	93M-BOA-NAT-LOT-09170
3	93M-BOA-NAT-LOT-01976
4	93M-BOA-NAT-LOT-20021
5	
6	
7	
8	
9	

6TH OF OCTOBER CITY RAIL TRANSIT MONORAIL

The Authority | Hill International Consultant | Main Contractor | Structural Designer

KEY PLAN:

SCALE: AS SHOWN | SHOPDRAWING | DATE: 12/09/2023

REV.	DATE	DSG	CHK	APP	AMENDMENTS	STATUS
B	12/05/2023	M.KH	M.KH	DR.M.M	ISSUED FOR INFORMATION	IFI
A	11/20/2022	M.KH	M.KH	DR.M.M	ISSUED FOR INFORMATION	IFI

DRAWING TITLE

6TH OF OCTOBER MONORAIL
SERVICE WALKWAYS
ZONE (1008)
W774

Project Code	Rubric	Initiator	Lot	Ref	Number	Revision
93M	047	ACC	60	DEP	DWG	08756	B

Tekla structures

approval is subject to approval of coordination package between multi-discipline

REVIEWED WITH COMMENT
MONORAILS PROJECT

All holes are 22mm U.N.O Length & Area & Weight per piece

Mark	Profile	Grade	QTY	Length	Area	Weight
W772	CHS48.3*4.0	S235JR	1	427.5	0.06	1.9

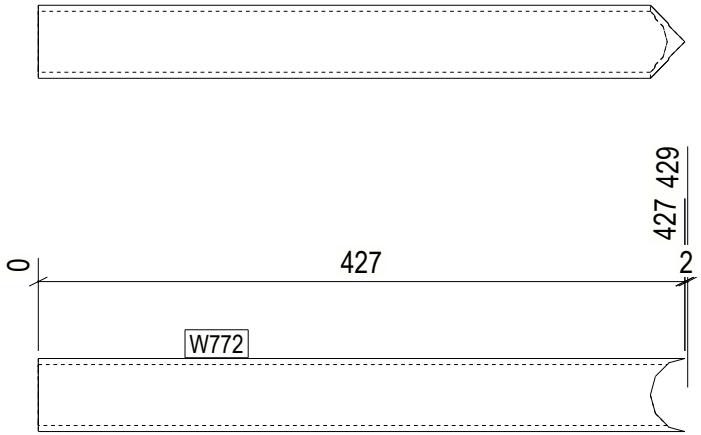

1 REQ'D AS DRAWN MK'D W772

6 October Monorail
Engineering Unit
Valid For Construction

GENERAL NOTES:

1. THE DIMENSIONS SHOWN ARE NOMINAL (IN MILLIMETERS), U.N.O.
2. WELD SIZESHALL BE AISC MINIMUM OF 6 mm UNLESS NOTED OTHERWISE.
3. ALL FIELD WELDS SHALL BE INSPECTED PER QUALITY ASSURANCE AND SPECIAL INSPECTIONS.

REFERENCE DRAWINGS

1	93M-BOA-NAT-LOT-04833
2	93M-BOA-NAT-LOT-09170
3	93M-BOA-NAT-LOT-01976
4	93M-BOA-NAT-LOT-20021
5	
6	
7	
8	
9	

6TH OF OCTOBER CITY RAIL TRANSIT MONORAIL

The Authority — Hill International Consultant — Main Contractor — Structural Designer

KEY PLAN:

REV	DATE	DSG	CHK	APP	AMENDMENTS	STATUS
B	12/05/2023	M.KH	M.KH	DR.M.M	ISSUED FOR INFORMATION	IFI
A	11/20/2022	M.KH	M.KH	DR.M.M	ISSUED FOR INFORMATION	IFI

SCALE AS SHOWN | SHOPDRAWING | DATE 12/05/2023

DRAWING TITLE
6TH OF OCTOBER MONORAIL
SERVICE WALKWAYS
ZONE (1008)
W772

Project Code	Rubric	Initiator	Lot	Ref	Number	Revision
9 3 M	0 4 7 6	A C C	6 0 D E P	D W G	0 8 7 5 7	B

Tekla structures

approval is subject to approval of coordination package between multi-discipline

REVIEWED WITH COMMENT
MONORAILS PROJECT

All holes are 22mm U.N.O Length & Area & Weight per piece

Mark	Profile	Grade	QTY	Length	Area	Weight
W770	CHS48.3*4.0	S235JR	1	565.8	0.08	2.5

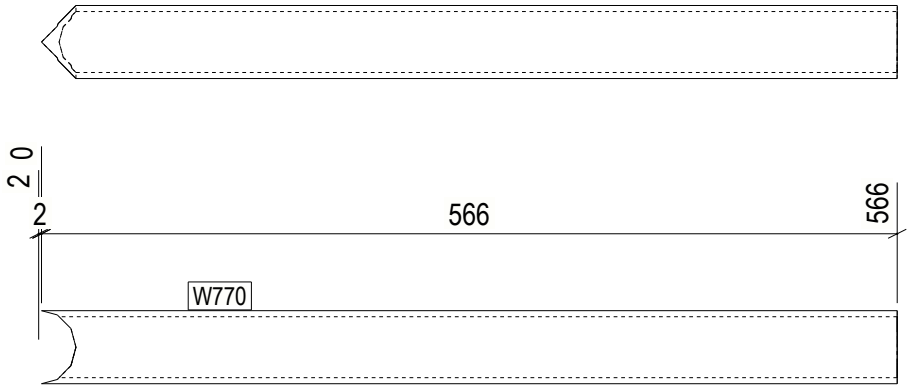

1 REQ'D AS DRAWN MK'D W770

6 October Monorail
Engineering Unit
Valid For Construction

Tekla structures

GENERAL NOTES:

1. THE DIMENSIONS SHOWN ARE NOMINAL (IN MILLIMETERS), U.N.O.
2. WELD SIZESHALL BE AISC MINIMUM OF 6 mm UNLESS NOTED OTHERWISE.
3. ALL FIELD WELDS SHALL BE INSPECTED PER QUALITY ASSURANCE AND SPECIAL INSPECTIONS.

REFERENCE DRAWINGS

1	93M-BOA-NAT-LOT-04833
2	93M-BOA-NAT-LOT-09170
3	93M-BOA-NAT-LOT-01976
4	93M-BOA-NAT-LOT-20021
5	
6	
7	
8	
9	

6TH OF OCTOBER CITY RAIL TRANSIT MONORAIL

The Authority | Hill International Consultant | Main Contractor | Structural Designer

KEY PLAN:

SCALE: AS SHOWN | SHOPDRAWING | DATE: 12/09/2023

REV.	DATE	DSG	CHK	APP	AMENDMENTS	STATUS
B	12/05/2023	M.KH	M.KH	DR.BM	ISSUED FOR INFORMATION	IFI
A	11/20/2022	M.KH	M.KH	DR.BM	ISSUED FOR INFORMATION	IFI

DRAWING TITLE

6TH OF OCTOBER MONORAIL
SERVICE WALKWAYS
ZONE (1008)
W770

Project Code	Rubric	Initiator	Lot	Ref	Number	Revision
9 3 M	0 4 7 6	A C C	6 0 D E P	D W G	0 8 7 5 8	B

approval is subject to approval of coordination package between multi-discipline

REVIEWED WITH COMMENT
MONORAILS PROJECT

All holes are 22mm U.N.O Length & Area & Weight per piece

Mark	Profile	Grade	QTY	Length	Area	Weight
W769	CHS48.3*4.0	S355-JR	1	87.1	0.01	0.4

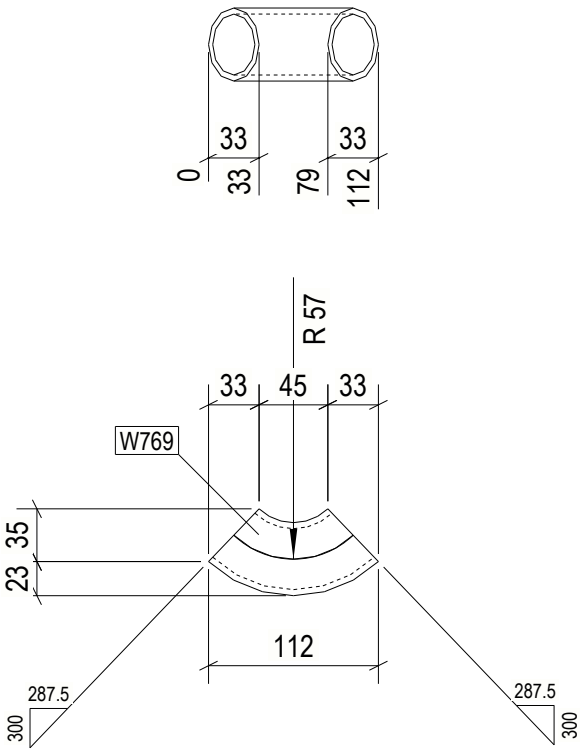

1 REQ'D AS DRAWN MK'D W769

6 October Monorail
Engineering Unit
Valid For Construction

GENERAL NOTES:

1. THE DIMENSIONS SHOWN ARE NOMINAL (IN MILLIMETERS), U.N.O.
2. WELD SIZESHALL BE AISC MINIMUM OF 6 mm UNLESS NOTED OTHERWISE.
3. ALL FIELD WELDS SHALL BE INSPECTED PER QUALITY ASSURANCE AND SPECIAL INSPECTIONS.

REFERENCE DRAWINGS

1	93M-BOA-NAT-LOT-04833
2	93M-BOA-NAT-LOT-09170
3	93M-BOA-NAT-LOT-01976
4	93M-BOA-NAT-LOT-20021
5	
6	
7	
8	
9	

6TH OF OCTOBER CITY RAIL TRANSIT MONORAIL

The Authority — Hill International Consultant — Main Contractor — Structural Designer

KEY PLAN:

SCALE: AS SHOWN | SHOPDRAWING | DATE: 12/09/2023

REV	DATE	DSG	CHK	APP	AMENDMENTS	STATUS
B	12/05/2023	M.KH	M.KH	DR.M.M	ISSUED FOR INFORMATION	IFI
A	11/20/2022	M.KH	M.KH	DR.M.M	ISSUED FOR INFORMATION	IFI

DRAWING TITLE

6TH OF OCTOBER MONORAIL
SERVICE WALKWAYS
ZONE (1008)
W769

Project Code	Rubric	Initiator	Lot	Ref	Number	Revision
93M	047	ACC	60DEP	DWG	0875	B

Tekla structures

approval is subject to approval of coordination package between multi-discipline

REVIEWED WITH COMMENT
MONORAILS PROJECT

All holes are 22mm U.N.O Length & Area & Weight per piece

Mark	Profile	Grade	QTY	Length	Area	Weight
W768	CHS48.3*4.0	S235JR	2	87.1	0.01	0.4

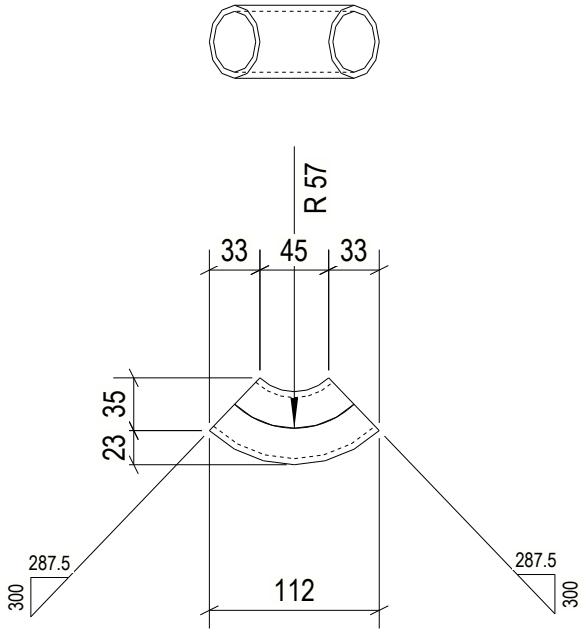

2 REQ'D AS DRAWN MK'D W768

6 October Monorail
Engineering Unit
Valid For Construction

GENERAL NOTES:

1. THE DIMENSIONS SHOWN ARE NOMINAL (IN MILLIMETERS), U.N.O.
2. WELD SIZESHALL BE AISC MINIMUM OF 6 mm UNLESS NOTED OTHERWISE.
3. ALL FIELD WELDS SHALL BE INSPECTED PER QUALITY ASSURANCE AND SPECIAL INSPECTIONS.

REFERENCE DRAWINGS

1	93M-BOA-NAT-LOT-04833
2	93M-BOA-NAT-LOT-09170
3	93M-BOA-NAT-LOT-01976
4	93M-BOA-NAT-LOT-20021
5	
6	
7	
8	
9	

6TH OF OCTOBER CITY RAIL TRANSIT MONORAIL

The Authority | Hill International Consultant | Main Contractor | Structural Designer

KEY PLAN:

REV.	DATE	DSG	CHK	APP	AMENDMENTS	STATUS
B	12/05/2023	M.KH	M.KH	DR.M.M	ISSUED FOR INFORMATION	IFI
A	11/20/2022	M.KH	M.KH	DR.M.M	ISSUED FOR INFORMATION	IFI

SCALE: AS SHOWN | SHOPDRAWING | DATE: 12/05/2023

DRAWING TITLE
6TH OF OCTOBER MONORAIL
SERVICE WALKWAYS
ZONE (1008)
W768

Project Code	Rubric	Initiator	Lot	Ref	Number	Revision
9 3 M	0 4 7 6	A C C	6 0 D	E P	D W G	0 8 7 6 0	B

Tekla structures

approval is subject to approval of coordination package between multi-discipline

REVIEWED WITH COMMENT
MONORAILS PROJECT

All holes are 22mm U.N.O Length & Area & Weight per piece

Mark	Profile	Grade	QTY	Length	Area	Weight
W766	PL12*65	S355JR	1	190.0	0.03	1.2

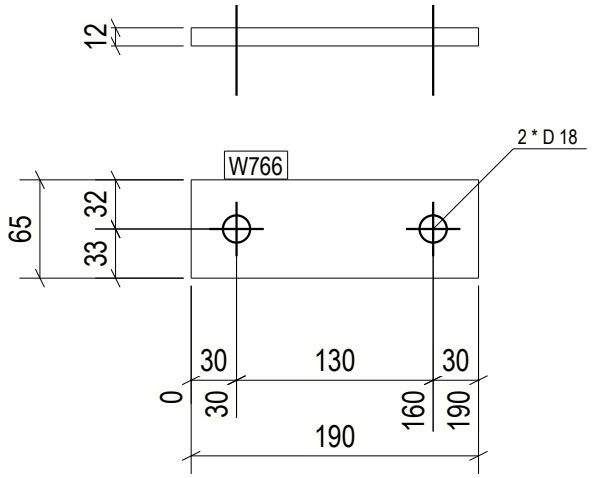

1 REQ'D AS DRAWN MK'D W766

6 October Monorail
Engineering Unit
Valid For Construction

GENERAL NOTES:

1. THE DIMENSIONS SHOWN ARE NOMINAL (IN MILLIMETERS), U.N.O.
2. WELD SIZESHALL BE AISC MINIMUM OF 6 mm UNLESS NOTED OTHERWISE.
3. ALL FIELD WELDS SHALL BE INSPECTED PER QUALITY ASSURANCE AND SPECIAL INSPECTIONS.

REFERENCE DRAWINGS

1	93M-BOA-NAT-LOT-04833
2	93M-BOA-NAT-LOT-09170
3	93M-BOA-NAT-LOT-01976
4	93M-BOA-NAT-LOT-20021
5	
6	
7	
8	
9	

6TH OF OCTOBER CITY RAIL TRANSIT MONORAIL

The Authority | Hill International Consultant | Main Contractor | Structural Designer

KEY PLAN:

REV.	DATE	DSG	CHK	APP	AMENDMENTS	STATUS
B	12/05/2023	M.KH	M.KH	DR.M.M	ISSUED FOR INFORMATION	IFI
A	11/20/2022	M.KH	M.KH	DR.M.M	ISSUED FOR INFORMATION	IFI

SCALE: AS SHOWN | SHOPDRAWING | DATE: 12/05/2023

DRAWING TITLE
6TH OF OCTOBER MONORAIL
SERVICE WALKWAYS
ZONE (1008)
W766

Project Code	Rubric	Initiator	Lot	Ref	Number	Revision
9 3 M	0 4 7 6	A C C	6 0 D	E P	D W G	0 8 7 6 1	B

Tekla structures

approval is subject to approval of coordination package between multi-discipline

REVIEWED WITH COMMENT
MONORAILS PROJECT

All holes are 22mm U.N.O Length & Area & Weight per piece

Mark	Profile	Grade	QTY	Length	Area	Weight
W765	PL12*65	S355JR	1	190.0	0.03	1.2

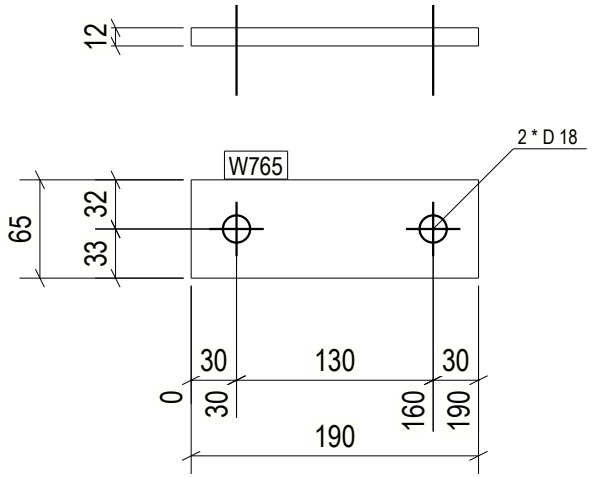

1 REQ'D AS DRAWN MK'D W765

6 October Monorail
Engineering Unit
Valid For Construction

GENERAL NOTES:

1. THE DIMENSIONS SHOWN ARE NOMINAL (IN MILLIMETERS), U.N.O.
2. WELD SIZESHALL BE AISC MINIMUM OF 6 mm UNLESS NOTED OTHERWISE.
3. ALL FIELD WELDS SHALL BE INSPECTED PER QUALITY ASSURANCE AND SPECIAL INSPECTIONS.

REFERENCE DRAWINGS

1	93M-BOA-NAT-LOT-04833
2	93M-BOA-NAT-LOT-09170
3	93M-BOA-NAT-LOT-01976
4	93M-BOA-NAT-LOT-20021
5	
6	
7	
8	
9	

6TH OF OCTOBER CITY RAIL TRANSIT MONORAIL

The Authority | Hill International Consultant | Main Contractor | Structural Designer

KEY PLAN:

REV.	DATE	DSG	CHK	APP	AMENDMENTS	STATUS
B	12/05/2023	M.KH	M.KH	DR.M.M	ISSUED FOR INFORMATION	IFI
A	11/20/2022	M.KH	M.KH	DR.M.M	ISSUED FOR INFORMATION	IFI

SCALE AS SHOWN | SHOPDRAWING | DATE 12/05/2023

DRAWING TITLE
6TH OF OCTOBER MONORAIL
SERVICE WALKWAYS
ZONE (1008)
W765

Project Code	Rubric	Initiator	Lot	Ref	Number	Revision
9 3 M	0 4 7 6	A C C	6 0 D	E P	D W G	0 8 7 6 2	B

Tekla structures

approval is subject to approval of coordination package between multi-discipline

REVIEWED WITH COMMENT
MONORAILS PROJECT

All holes are 22mm U.N.O Length & Area & Weight per piece

Mark	Profile	Grade	QTY	Length	Area	Weight
W764	CHS48.3*4.0	S235JR	1	208.8	0.03	0.9

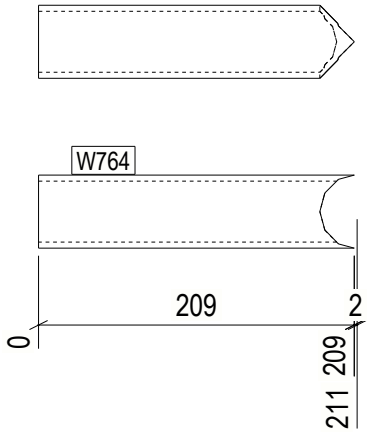

1 REQ'D AS DRAWN MK'D W764

6 October Monorail
Engineering Unit
Valid For Construction

GENERAL NOTES:

1. THE DIMENSIONS SHOWN ARE NOMINAL (IN MILLIMETERS), U.N.O.
2. WELD SIZESHALL BE AISC MINIMUM OF 6 mm UNLESS NOTED OTHERWISE.
3. ALL FIELD WELDS SHALL BE INSPECTED PER QUALITY ASSURANCE AND SPECIAL INSPECTIONS.

REFERENCE DRAWINGS

1	93M-BOA-NAT-LOT-04833
2	93M-BOA-NAT-LOT-09170
3	93M-BOA-NAT-LOT-01976
4	93M-BOA-NAT-LOT-20021
5	
6	
7	
8	
9	

6TH OF OCTOBER CITY RAIL TRANSIT MONORAIL

The Authority | Hill International Consultant | Main Contractor | Structural Designer

KEY PLAN:

REV	DATE	DSG	CHK	APP	AMENDMENTS	STATUS
B	12/05/2023	M.KH	M.KH	DR.M.M	ISSUED FOR INFORMATION	IFI
A	11/20/2022	M.KH	M.KH	DR.M.M	ISSUED FOR INFORMATION	IFI

SCALE AS SHOWN | SHOPDRAWING | DATE 12/05/2023

DRAWING TITLE
6TH OF OCTOBER MONORAIL
SERVICE WALKWAYS
ZONE (1008)
W764

Project Code	Rubric	Initiator	Lot	Ref	Number	Revision
9 3	M 0 4	7 6	A C C	6 0	D E P	D W G	0 8 7 6 3	B

Tekla structures

approval is subject to approval of coordination package between multi-discipline

REVIEWED WITH COMMENT
MONORAILS PROJECT

All holes are 22mm U.N.O Length & Area & Weight per piece

Mark	Profile	Grade	QTY	Length	Area	Weight
W763	CHS48.3*4.0	S235JR	1	1204.4	0.18	5.3

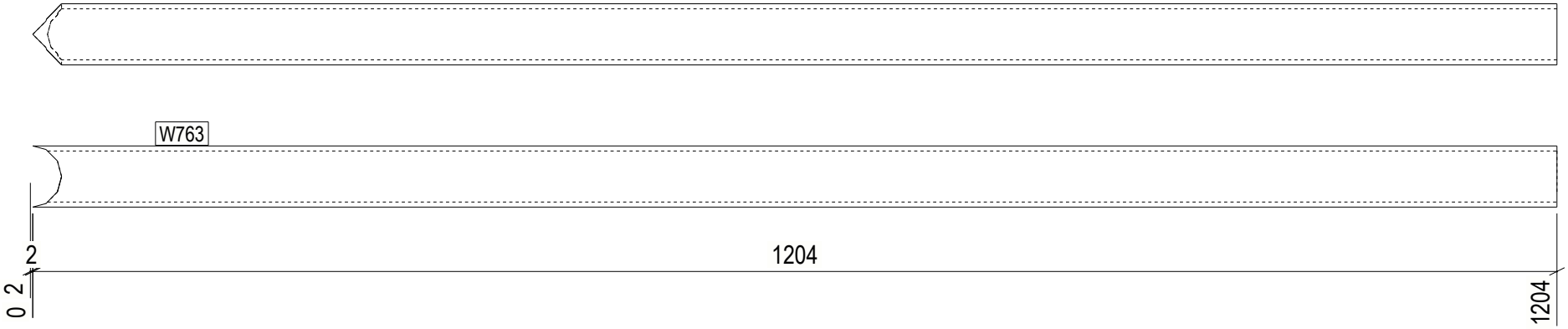

1 REQ'D AS DRAWN MK'D W763

6 October Monorail
Engineering Unit
Valid For Construction

GENERAL NOTES:

1. THE DIMENSIONS SHOWN ARE NOMINAL (IN MILLIMETERS), U.N.O.
2. WELD SIZESHALL BE AISC MINIMUM OF 6 mm UNLESS NOTED OTHERWISE.
3. ALL FIELD WELDS SHALL BE INSPECTED PER QUALITY ASSURANCE AND SPECIAL INSPECTIONS.

REFERENCE DRAWINGS

1	93M-BOA-NAT-LOT-04833
2	93M-BOA-NAT-LOT-09170
3	93M-BOA-NAT-LOT-01976
4	93M-BOA-NAT-LOT-20021
5	
6	
7	
8	
9	

6TH OF OCTOBER CITY RAIL TRANSIT MONORAIL

The Authority — Hill International Consultant — Main Contractor — Structural Designer

KEY PLAN:

REV.	DATE	DSG	CHK	APP	AMENDMENTS	STATUS
B	12/05/2023	M.KH	M.KH	DR.M.M	ISSUED FOR INFORMATION	IFI
A	11/20/2022	M.KH	M.KH	DR.M.M	ISSUED FOR INFORMATION	IFI

SCALE: AS SHOWN | SHOPDRAWING | DATE: 12/05/2023

DRAWING TITLE
6TH OF OCTOBER MONORAIL
SERVICE WALKWAYS
ZONE (1008)
W763

Project Code	Rubric	Initiator	Lot	Ref	Number	Revision
9 3 M	0 4 7 6	A C C	6 0 D E	P D W	G 0 8 7 6 4	B

Tekla structures

approval is subject to approval of coordination package between multi-discipline

REVIEWED WITH COMMENT
MONORAILS PROJECT

All holes are 22mm U.N.O Length & Area & Weight per piece

Mark	Profile	Grade	QTY	Length	Area	Weight
W761	PL12*65	S355JR	2	190.0	0.03	1.2

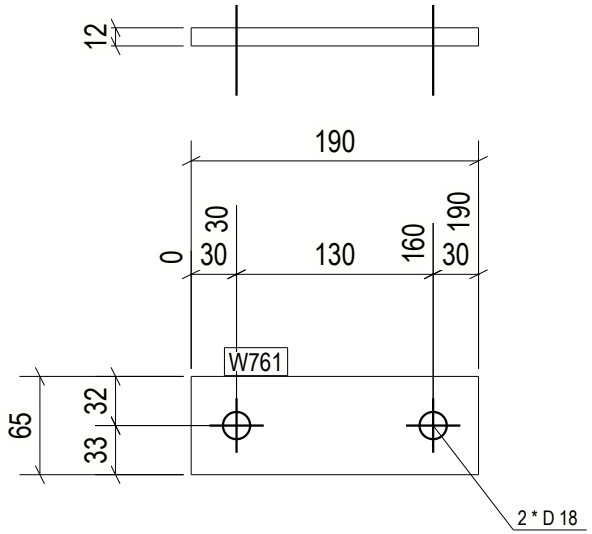

2 REQ'D AS DRAWN MK'D W761

6 October Monorail
Engineering Unit
Valid For Construction

GENERAL NOTES:

1. THE DIMENSIONS SHOWN ARE NOMINAL (IN MILLIMETERS), U.N.O.
2. WELD SIZESHALL BE AISC MINIMUM OF 6 mm UNLESS NOTED OTHERWISE.
3. ALL FIELD WELDS SHALL BE INSPECTED PER QUALITY ASSURANCE AND SPECIAL INSPECTIONS.

REFERENCE DRAWINGS

1	93M-BOA-NAT-LOT-04833
2	93M-BOA-NAT-LOT-09170
3	93M-BOA-NAT-LOT-01976
4	93M-BOA-NAT-LOT-20021
5	
6	
7	
8	
9	

6TH OF OCTOBER CITY RAIL TRANSIT MONORAIL

The Authority — Hill International Consultant — Main Contractor — Structural Designer

KEY PLAN:

SCALE	SHOPDRAWING	DATE
AS SHOWN		12/09/2023

REV	DATE	DSG	CHK	APP	AMENDMENTS	STATUS
B	12/05/2023	M.KH	M.KH	DR.BUM	ISSUED FOR INFORMATION	IFI
A	11/20/2022	M.KH	M.KH	DR.BUM	ISSUED FOR INFORMATION	IFI

DRAWING TITLE

6TH OF OCTOBER MONORAIL
SERVICE WALKWAYS
ZONE (1008)
W761

Project Code	Rubric	Initiator	Lot	Ref	Number	Revision
93M	476	ACC	60DEP	DWG	0876	5 B

Tekla structures

approval is subject to approval of coordination package between multi-discipline

REVIEWED WITH COMMENT
MONORAILS PROJECT

All holes are 22mm U.N.O Length & Area & Weight per piece

Mark	Profile	Grade	QTY	Length	Area	Weight
W760	PL12*65	S355JR	2	190.0	0.03	1.2

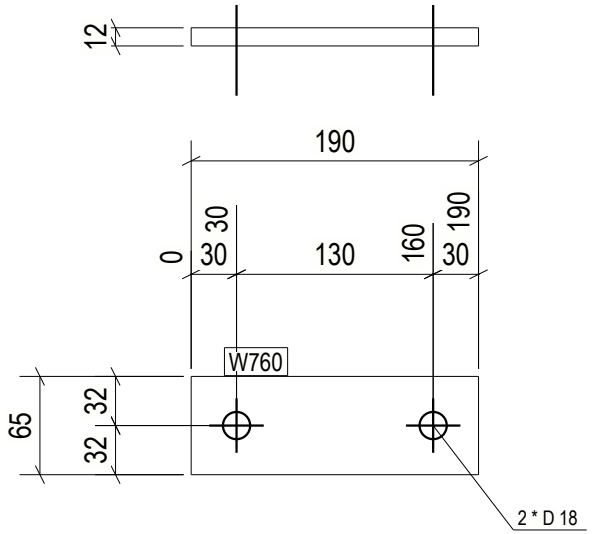

2 REQ'D AS DRAWN MK'D W760

6 October Monorail
Engineering Unit
Valid For Construction

GENERAL NOTES:

1. THE DIMENSIONS SHOWN ARE NOMINAL (IN MILLIMETERS), U.N.O.
2. WELD SIZESHALL BE AISC MINIMUM OF 6 mm UNLESS NOTED OTHERWISE.
3. ALL FIELD WELDS SHALL BE INSPECTED PER QUALITY ASSURANCE AND SPECIAL INSPECTIONS.

REFERENCE DRAWINGS

1	93M-BOA-NAT-LOT-04833
2	93M-BOA-NAT-LOT-09170
3	93M-BOA-NAT-LOT-01976
4	93M-BOA-NAT-LOT-20021
5	
6	
7	
8	
9	

6TH OF OCTOBER CITY RAIL TRANSIT MONORAIL

The Authority | Hill International Consultant | Main Contractor | Structural Designer

KEY PLAN:

REV.	DATE	DSG	CHK	APP	AMENDMENTS	STATUS
B	12/05/2023	M.KH	M.KH	DR.BUM	ISSUED FOR INFORMATION	IFI
A	11/20/2022	M.KH	M.KH	DR.BUM	ISSUED FOR INFORMATION	IFI

SCALE AS SHOWN | SHOPDRAWING | DATE 12/05/2023

DRAWING TITLE
6TH OF OCTOBER MONORAIL
SERVICE WALKWAYS
ZONE (1008)
W760

Project Code	Rubric	Initiator	Lot	Ref	Number	Revision
93M	047	ACC	60DEP	DWG	0876	B

Tekla structures

approval is subject to approval of coordination package between multi-discipline

REVIEWED WITH COMMENT
MONORAILS PROJECT

All holes are 22mm U.N.O Length & Area & Weight per piece

Mark	Profile	Grade	QTY	Length	Area	Weight
W759	CHS48.3*4.0	S235JR	1	1119.0	0.17	4.9

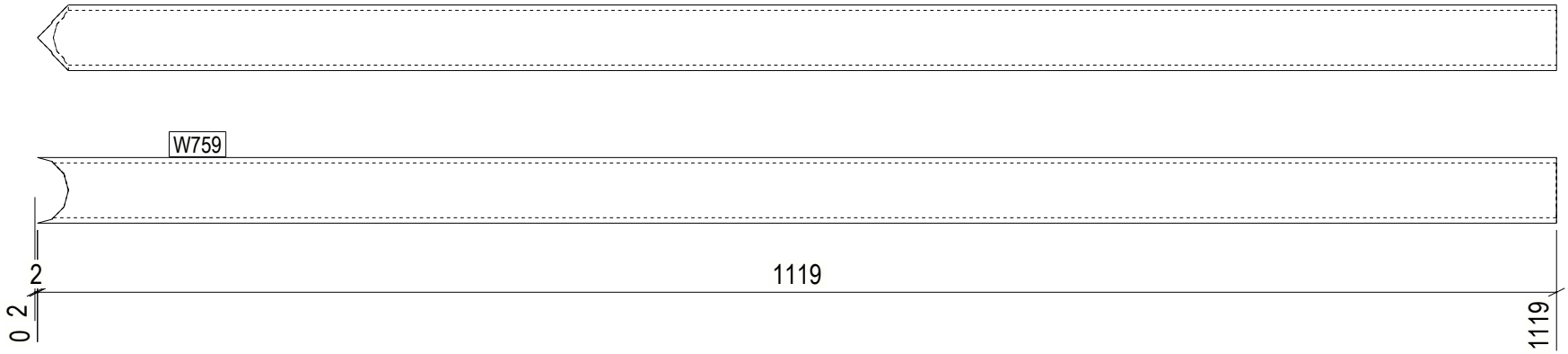

1 REQ'D AS DRAWN MK'D W759

6 October Monorail
Engineering Unit
Valid For Construction

GENERAL NOTES:

1. THE DIMENSIONS SHOWN ARE NOMINAL (IN MILLIMETERS), U.N.O.
2. WELD SIZESHALL BE AISC MINIMUM OF 6 mm UNLESS NOTED OTHERWISE.
3. ALL FIELD WELDS SHALL BE INSPECTED PER QUALITY ASSURANCE AND SPECIAL INSPECTIONS.

REFERENCE DRAWINGS

1	93M-BOA-NAT-LOT-04833
2	93M-BOA-NAT-LOT-09170
3	93M-BOA-NAT-LOT-01976
4	93M-BOA-NAT-LOT-20021
5	
6	
7	
8	
9	

6TH OF OCTOBER CITY RAIL TRANSIT MONORAIL

The Authority — Hill International Consultant — Main Contractor — Structural Designer

KEY PLAN:

REV.	DATE	DSG	CHK	APP	AMENDMENTS	STATUS
B	12/05/2023	M.KH	M.KH	DR.M.M	ISSUED FOR INFORMATION	IFI
A	11/20/2022	M.KH	M.KH	DR.M.M	ISSUED FOR INFORMATION	IFI

SCALE: AS SHOWN | SHOPDRAWING | DATE: 12/05/2023

DRAWING TITLE
6TH OF OCTOBER MONORAIL
SERVICE WALKWAYS
ZONE (1008)
W759

Project Code	Rubric	Initiator	Lot	Ref	Number	Revision
9 3 M	0 4 7 6	A C C	6 0 D E P	D W G	0 8 7 6 7	B

Tekla structures

approval is subject to approval of coordination package between multi-discipline

REVIEWED WITH COMMENT
MONORAILS PROJECT

All holes are 22mm U.N.O Length & Area & Weight per piece

Mark	Profile	Grade	QTY	Length	Area	Weight
W758	CHS48.3*4.0	S235JR	1	327.5	0.05	1.4

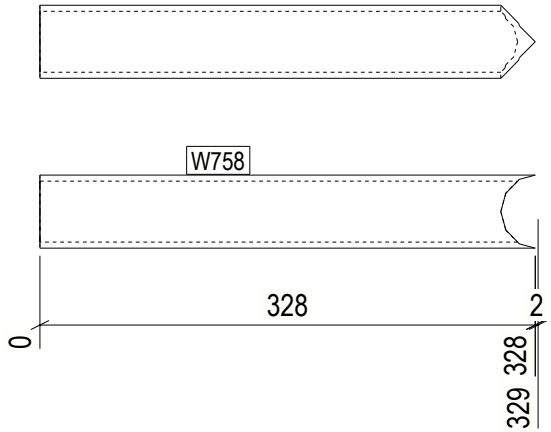

1 REQ'D AS DRAWN MK'D W758

6 October Monorail
Engineering Unit
Valid For Construction

GENERAL NOTES:

1. THE DIMENSIONS SHOWN ARE NOMINAL (IN MILLIMETERS), U.N.O.
2. WELD SIZESHALL BE AISC MINIMUM OF 6 mm UNLESS NOTED OTHERWISE.
3. ALL FIELD WELDS SHALL BE INSPECTED PER QUALITY ASSURANCE AND SPECIAL INSPECTIONS.

REFERENCE DRAWINGS

1	93M-BOA-NAT-LOT-04833
2	93M-BOA-NAT-LOT-09170
3	93M-BOA-NAT-LOT-01976
4	93M-BOA-NAT-LOT-20021
5	
6	
7	
8	
9	

6TH OF OCTOBER CITY RAIL TRANSIT MONORAIL

The Authority | Hill International Consultant | Main Contractor | Structural Designer

KEY PLAN:

SCALE	SHOPDRAWING	DATE
AS SHOWN		12/09/2023

REV	DATE	DSG	CHK	APP	AMENDMENTS	STATUS
B	12/05/2023	M.KH	M.KH	DR.BIM	ISSUED FOR INFORMATION	IFI
A	11/20/2022	M.KH	M.KH	DR.BIM	ISSUED FOR INFORMATION	IFI

DRAWING TITLE

6TH OF OCTOBER MONORAIL
SERVICE WALKWAYS
ZONE (1008)
W758

Project Code	Rubric	Initiator	Lot	Ref	Number	Revision
93M	047	ACC	60	DEP	DWG	0876	B

Tekla structures

approval is subject to approval of coordination package between multi-discipline

REVIEWED WITH COMMENT
MONORAILS PROJECT

All holes are 22mm U.N.O Length & Area & Weight per piece

Mark	Profile	Grade	QTY	Length	Area	Weight
W756	PL10*160	S355JR	1	247.1	0.09	3.1

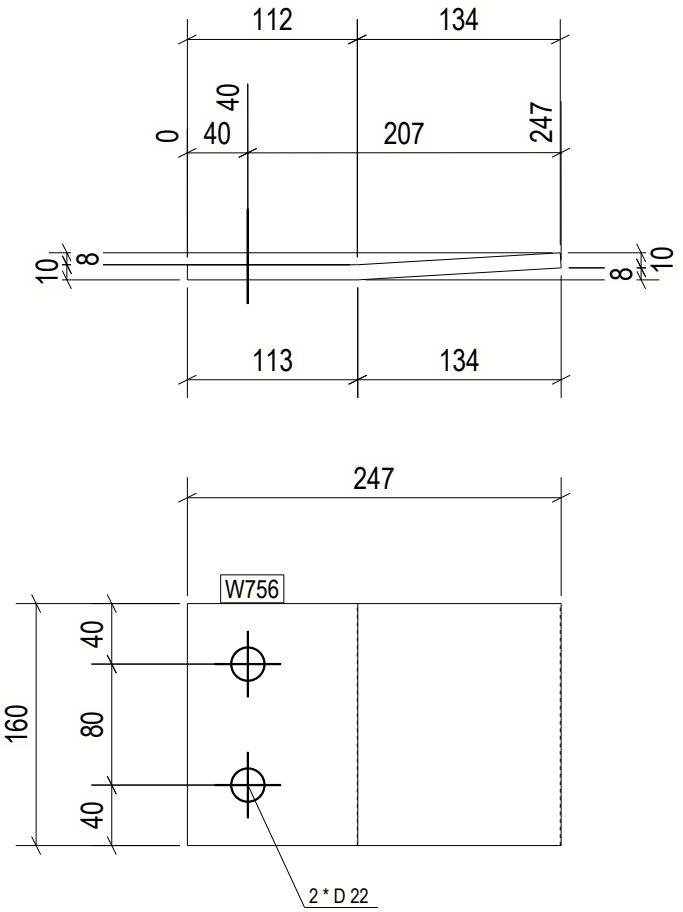

1 REQ'D AS DRAWN MK'D W756

6 October Monorail
Engineering Unit
Valid For Construction

GENERAL NOTES:

1. THE DIMENSIONS SHOWN ARE NOMINAL (IN MILLIMETERS), U.N.O.
2. WELD SIZESHALL BE AISC MINIMUM OF 6 mm UNLESS NOTED OTHERWISE.
3. ALL FIELD WELDS SHALL BE INSPECTED PER QUALITY ASSURANCE AND SPECIAL INSPECTIONS.

REFERENCE DRAWINGS

1	93M-BOA-NAT-LOT-04833
2	93M-BOA-NAT-LOT-09170
3	93M-BOA-NAT-LOT-01976
4	93M-BOA-NAT-LOT-20021
5	
6	
7	
8	
9	

6TH OF OCTOBER CITY RAIL TRANSIT MONORAIL

The Authority | Hill International Consultant | Main Contractor | Structural Designer

KEY PLAN:

SCALE: AS SHOWN | SHOPDRAWING | DATE: 12/09/2023

REV.	DATE	DSG	CHK	APP	AMENDMENTS	STATUS
B	12/05/2023	M.KH	M.KH	DR.M.M	ISSUED FOR INFORMATION	IFI
A	11/20/2022	M.KH	M.KH	DR.M.M	ISSUED FOR INFORMATION	IFI

DRAWING TITLE
6TH OF OCTOBER MONORAIL
SERVICE WALKWAYS
ZONE (1008)
W756

Project Code	Rubric	Initiator	Lot	Ref	Number	Revision
93M047	6ACC60	DEP	DWG	0876	9	B

Tekla structures

approval is subject to approval of coordination package between multi-discipline

REVIEWED WITH COMMENT
MONORAILS PROJECT

All holes are 22mm U.N.O Length & Area & Weight per piece

Mark	Profile	Grade	QTY	Length	Area	Weight
W755	PL10*239.9	S355JR	1	305.8	0.13	4.5

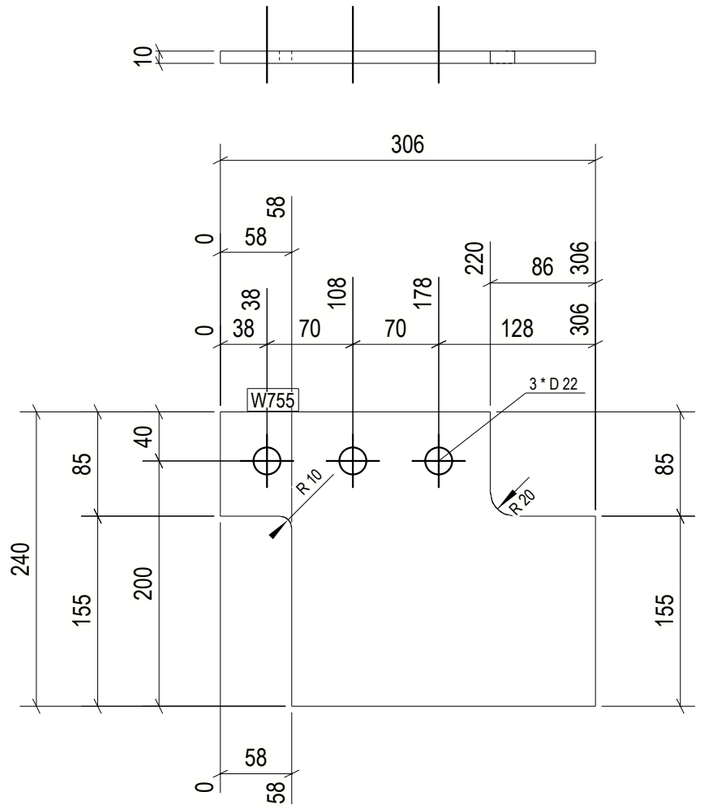

1 REQ'D AS DRAWN MK'D W755

GENERAL NOTES:

1. THE DIMENSIONS SHOWN ARE NOMINAL (IN MILLIMETERS), U.N.O.
2. WELD SIZESHALL BE AISC MINIMUM OF 6 mm UNLESS NOTED OTHERWISE.
3. ALL FIELD WELDS SHALL BE INSPECTED PER QUALITY ASSURANCE AND SPECIAL INSPECTIONS.

REFERENCE DRAWINGS

1	93M-BOA-NAT-LOT-04833
2	93M-BOA-NAT-LOT-09170
3	93M-BOA-NAT-LOT-01976
4	93M-BOA-NAT-LOT-20021
5	
6	
7	
8	
9	

6TH OF OCTOBER CITY RAIL TRANSIT MONORAIL

The Authority | Consultant: Hill International | Main Contractor: ORASCOM CONSTRUCTION, BOMBARDIER | Structural Designer: INNOVA TRANSPORTATION

KEY PLAN:

6 October Monorail
Engineering Unit
Valid For Construction

REV	DATE	DWN	CHK	APP	ISSUED FOR INFORMATION / AMENDMENTS	STATUS
B	12/05/2023	M.KH	M.KH	DR.M.M	ISSUED FOR INFORMATION	IFI

SCALE: AS SHOWN | SHOP DRAWING | DATE: 12/05/2023

DRAWING TITLE
6TH OF OCTOBER MONORAIL
SERVICE WALKWAYS
ZONE (1008)
W755

Project Code	Rubric	Initiator	Lot	Ref	Number	Revision
9 3 M	0 4 7 6	A C C	6 0 D E P	D W G	0 8 7 0	B

Tekla structures

approval is subject to approval of coordination package between multi-discipline

REVIEWED WITH COMMENT
MONORAILS PROJECT

All holes are 22mm U.N.O Length & Area & Weight per piece

Mark	Profile	Grade	QTY	Length	Area	Weight
W754	PL10*160	S355JR	1	243.0	0.09	3.1

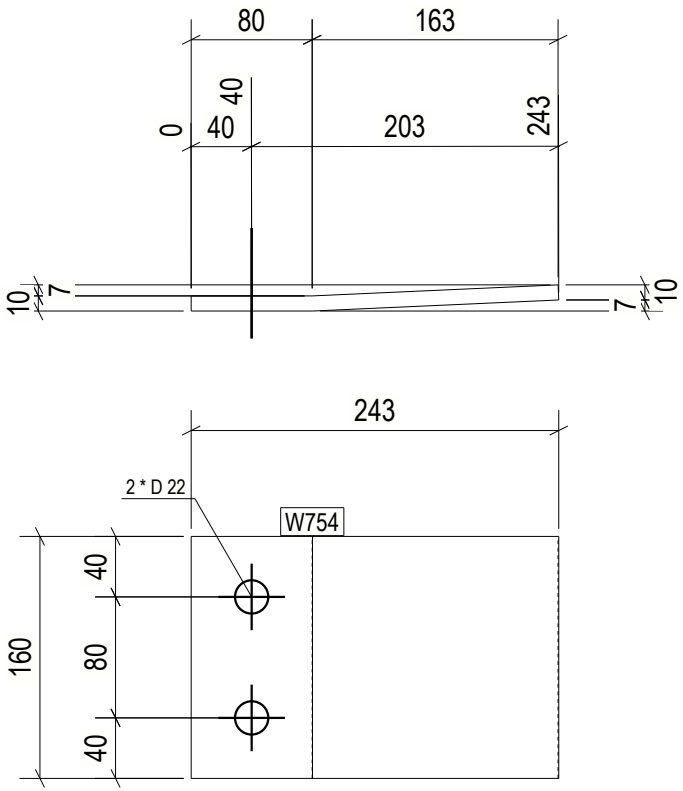

1 REQ'D AS DRAWN MK'D W754

6 October Monorail
Engineering Unit
Valid For Construction

GENERAL NOTES:

1. THE DIMENSIONS SHOWN ARE NOMINAL (IN MILLIMETERS), U.N.O.
2. WELD SIZESHALL BE AISC MINIMUM OF 6 mm UNLESS NOTED OTHERWISE.
3. ALL FIELD WELDS SHALL BE INSPECTED PER QUALITY ASSURANCE AND SPECIAL INSPECTIONS.

REFERENCE DRAWINGS

1	93M-BOA-NAT-LOT-04833
2	93M-BOA-NAT-LOT-09170
3	93M-BOA-NAT-LOT-01976
4	93M-BOA-NAT-LOT-20021
5	
6	
7	
8	
9	

6TH OF OCTOBER CITY RAIL TRANSIT MONORAIL

The Authority — Hill International Consultant — Main Contractor — Structural Designer

KEY PLAN:

REV	DATE	DSG	CHK	APP	AMENDMENTS	STATUS
B	12/05/2023	M.KH	M.KH	DR.M.M	ISSUED FOR INFORMATION	IFI
A	11/20/2022	M.KH	M.KH	DR.M.M	ISSUED FOR INFORMATION	IFI

SCALE AS SHOWN | SHOPDRAWING | DATE 12/05/2023

DRAWING TITLE
6TH OF OCTOBER MONORAIL
SERVICE WALKWAYS
ZONE (1008)
W754

Project Code	Rubric	Initiator	Lot	Ref	Number	Revision
9 3 M	0 4 7 6	A C C	6 0 D E P	D W G	0 8 7 7 1	B

Tekla structures

approval is subject to approval of coordination package between multi-discipline

REVIEWED WITH COMMENT
MONORAILS PROJECT

All holes are 22mm U.N.O Length & Area & Weight per piece						
W751	PL8*161.9	S355JR	1	307.6	0.06	1.7
Mark	Profile	Grade	QTY	Length	Area	Weight

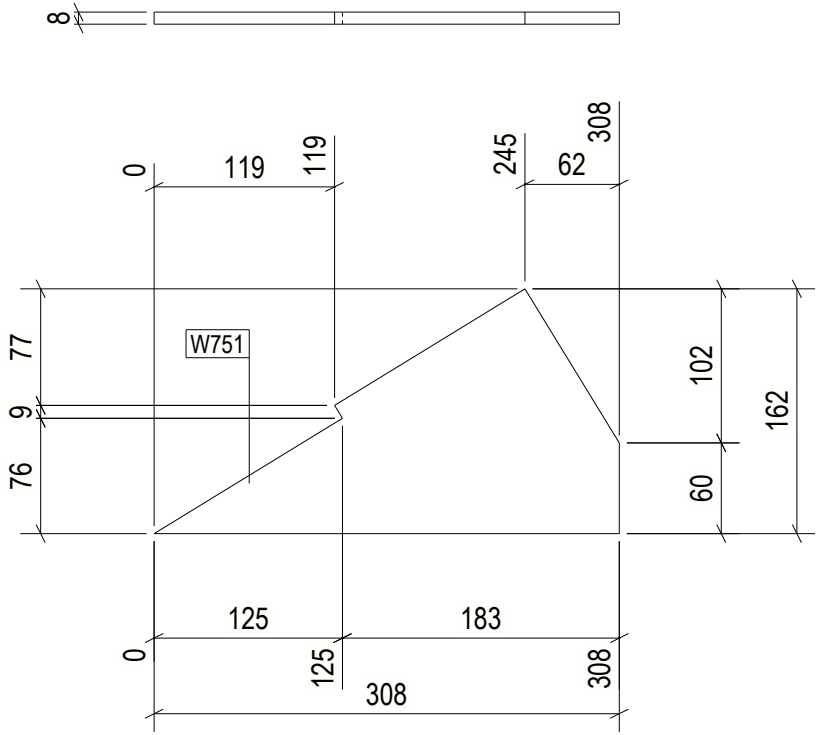

1 REQ'D AS DRAWN MK'D W751

6 October Monorail
Engineering Unit
Valid For Construction

GENERAL NOTES:

1. THE DIMENSIONS SHOWN ARE NOMINAL (IN MILLIMETERS), U.N.O.
2. WELD SIZESHALL BE AISC MINIMUM OF 6 mm UNLESS NOTED OTHERWISE.
3. ALL FIELD WELDS SHALL BE INSPECTED PER QUALITY ASSURANCE AND SPECIAL INSPECTIONS.

REFERENCE DRAWINGS

1	93M-BOA-NAT-LOT-04833
2	93M-BOA-NAT-LOT-09170
3	93M-BOA-NAT-LOT-01976
4	93M-BOA-NAT-LOT-20021
5	
6	
7	
8	
9	

6TH OF OCTOBER CITY RAIL TRANSIT MONORAIL

The Authority | Hill International Consultant | Main Contractor | Structural Designer

KEY PLAN:

REV.	DATE	DSG	CHK	APP	AMENDMENTS	STATUS
B	12/05/2023	M.KH	M.KH	DR.M.M	ISSUED FOR INFORMATION	IFI
A	11/20/2022	M.KH	M.KH	DR.M.M	ISSUED FOR INFORMATION	IFI

SCALE: AS SHOWN | SHOPDRAWING | DATE: 12/05/2023

DRAWING TITLE
6TH OF OCTOBER MONORAIL
SERVICE WALKWAYS
ZONE (1008)
W751

Project Code	Rubric	Initiator	Lot	Ref	Number	Revision
9 3 M	0 4 7 6	A C C	6 0 D E P	D W G	0 8 7 7 2	B

Tekla structures

approval is subject to approval of coordination package between multi-discipline

REVIEWED WITH COMMENT
MONORAILS PROJECT

All holes are 22mm U.N.O Length & Area & Weight per piece

Mark	Profile	Grade	QTY	Length	Area	Weight
W750	PL8*250	S355JR	1	559.2	0.24	7.2

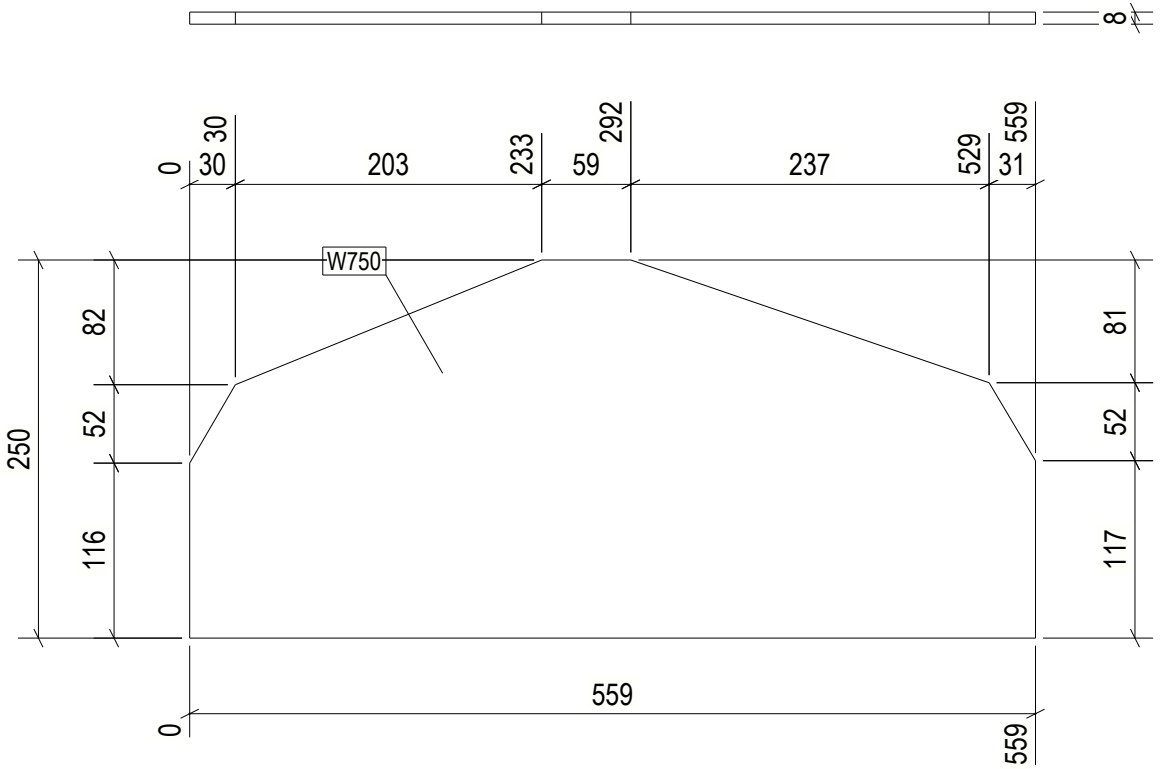

1 REQ'D AS DRAWN MK'D W750

6 October Monorail
Engineering Unit
Valid For Construction

GENERAL NOTES:

1. THE DIMENSIONS SHOWN ARE NOMINAL (IN MILLIMETERS), U.N.O.
2. WELD SIZESHALL BE AISC MINIMUM OF 6 mm UNLESS NOTED OTHERWISE.
3. ALL FIELD WELDS SHALL BE INSPECTED PER QUALITY ASSURANCE AND SPECIAL INSPECTIONS.

REFERENCE DRAWINGS

1	93M-BOA-NAT-LOT-04833
2	93M-BOA-NAT-LOT-09170
3	93M-BOA-NAT-LOT-01976
4	93M-BOA-NAT-LOT-20021
5	
6	
7	
8	
9	

6TH OF OCTOBER CITY RAIL TRANSIT MONORAIL

The Authority | Hill International Consultant | Main Contractor | Structural Designer

KEY PLAN:

SCALE: AS SHOWN | SHOPDRAWING | DATE: 12/09/2023

REV.	DATE	DSG	CHK	APP	AMENDMENTS	STATUS
B	12/05/2023	M.KH	M.KH	DR.BIM	ISSUED FOR INFORMATION	IFI
A	11/20/2022	M.KH	M.KH	DR.BIM	ISSUED FOR INFORMATION	IFI

DRAWING TITLE

6TH OF OCTOBER MONORAIL
SERVICE WALKWAYS
ZONE (1008)
W750

Project Code	Rubric	Initiator	Lot	Ref	Number	Revision
93M	047	6ACC	60DE	PDWG	0873	B

Tekla structures

approval is subject to approval of coordination package between multi-discipline

REVIEWED WITH COMMENT
MONORAILS PROJECT

All holes are 22mm U.N.O Length & Area & Weight per piece						
W749	PL8*286.9	S355-JR	1	487.7	0.25	7.4
Mark	Profile	Grade	QTY	Length	Area	Weight

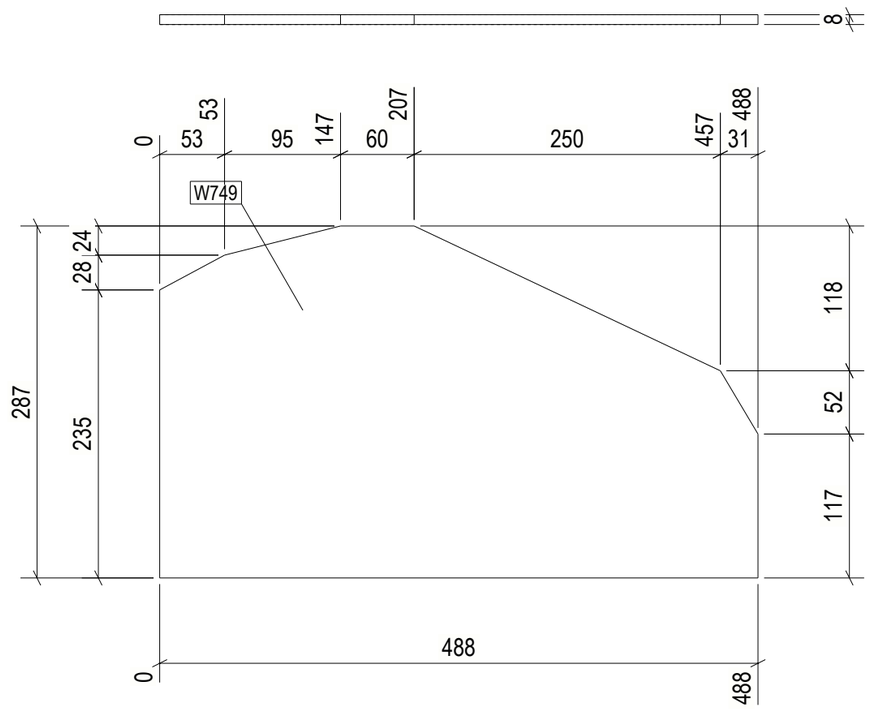

1 REQ'D AS DRAWN MK'D W749

GENERAL NOTES:

1. THE DIMENSIONS SHOWN ARE NOMINAL (IN MILLIMETERS), U.N.O.
2. WELD SIZESHALL BE AISC MINIMUM OF 6 mm UNLESS NOTED OTHERWISE.
3. ALL FIELD WELDS SHALL BE INSPECTED PER QUALITY ASSURANCE AND SPECIAL INSPECTIONS.

REFERENCE DRAWINGS

1	93M-BOA-NAT-LOT-04833
2	93M-BOA-NAT-LOT-09170
3	93M-BOA-NAT-LOT-01976
4	93M-BOA-NAT-LOT-20021
5	
6	
7	
8	
9	

6TH OF OCTOBER CITY RAIL TRANSIT MONORAIL

The Authority — Hill International Consultant — Main Contractor — Structural Designer

KEY PLAN:

6 October Monorail Engineering Unit Valid For Construction

SCALE: AS SHOWN | SHOP DRAWING | DATE: 12/05/2023

REV	DATE	DSN	CHK	APP	AMENDMENTS DESCRIPTION	STATUS
B	12/05/2023	M.KH	M.KH	DR.M.M	ISSUED FOR INFORMATION	IFI
A	17/4/22					

DRAWING TITLE

6TH OF OCTOBER MONORAIL
SERVICE WALKWAYS
ZONE (1008)
W749

Project Code	Rubric	Initiator	Lot	Ref	Number	Revision
9 3 M	0 4 7 6	A C C	6 0 D E	P D W G	0 8 7 7 4	B

Tekla structures

All holes are 22mm U.N.O Length & Area & Weight per piece						
W748	PL8*220.8	S355JR	1	617.4	0.25	7.5
Mark	Profile	Grade	QTY	Length	Area	Weight

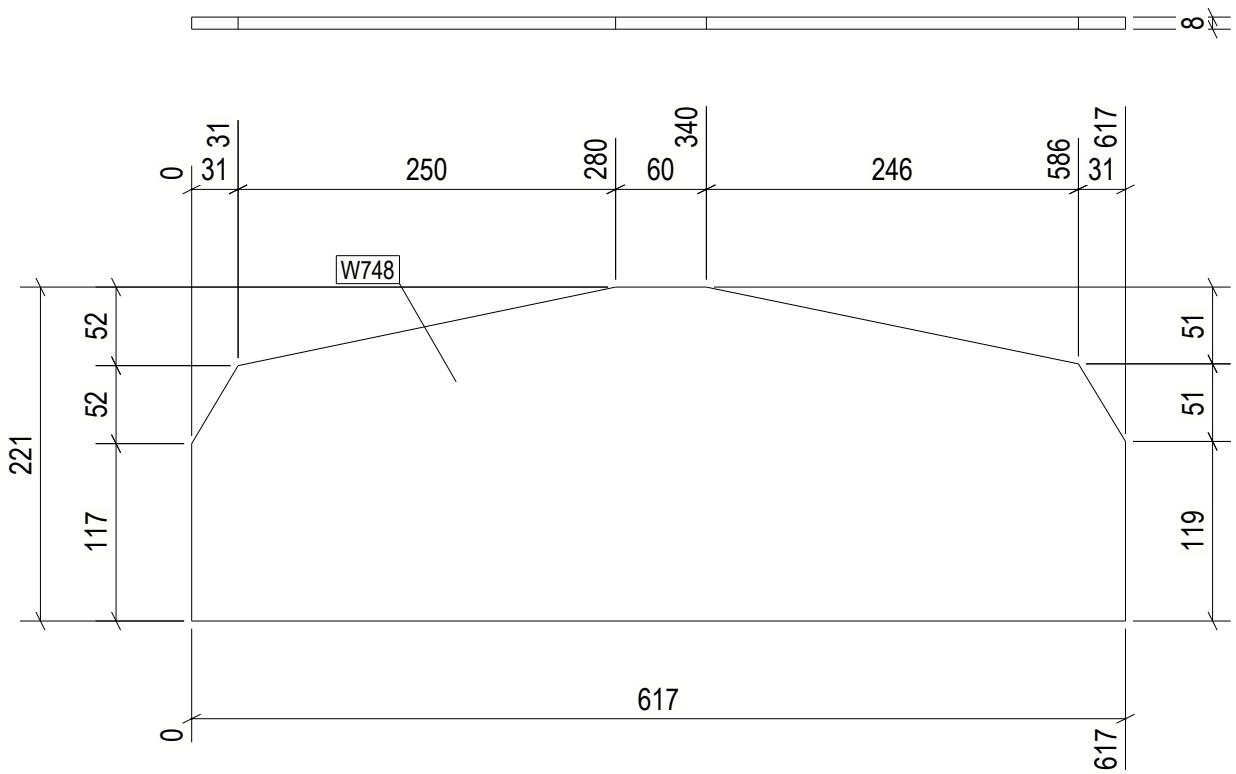

1 REQ'D AS DRAWN MK'D W748

Tekla structures

GENERAL NOTES:

1. THE DIMENSIONS SHOWN ARE NOMINAL (IN MILLIMETERS), U.N.O.
2. WELD SIZESHALL BE AISC MINIMUM OF 6 mm UNLESS NOTED OTHERWISE.
3. ALL FIELD WELDS SHALL BE INSPECTED PER QUALITY ASSURANCE AND SPECIAL INSPECTIONS.

REFERENCE DRAWINGS

1	93M-BOA-NAT-LOT-04833
2	93M-BOA-NAT-LOT-09170
3	93M-BOA-NAT-LOT-01976
4	93M-BOA-NAT-LOT-20021
5	
6	
7	
8	
9	

6TH OF OCTOBER CITY RAIL TRANSIT MONORAIL

The Authority — Hill International Consultant — Main Contractor — Structural Designer

KEY PLAN:

6 October Monorail Engineering Unit Valid For Construction

REV.	DATE	DSG	CHK	APP	AMENDMENTS	STATUS
B	12/05/2023	M.KH	M.KH	DR.M.M	ISSUED FOR INFORMATION	IFI
A	11/20/2022	M.KH	M.KH	DR.M.M	ISSUED FOR INFORMATION	IFI

SCALE: AS SHOWN | SHOPDRAWING | DATE: 12/05/2023

DRAWING TITLE

6TH OF OCTOBER MONORAIL SERVICE WALKWAYS ZONE (1008) W748

Project Code	Rubric	Initiator	Lot	Ref	Number	Revision
9 3 M	0 4 7 6	A C C	6 0 D E P	D W G	0 8 7 7 5	B

approval is subject to approval of coordination package between multi-discipline

REVIEWED WITH COMMENT
MONORAILS PROJECT

All holes are 22mm U.N.O Length & Area & Weight per piece

Mark	Profile	Grade	QTY	Length	Area	Weight
W747	PL8*160.9	S355JR	1	329.7	0.06	1.8

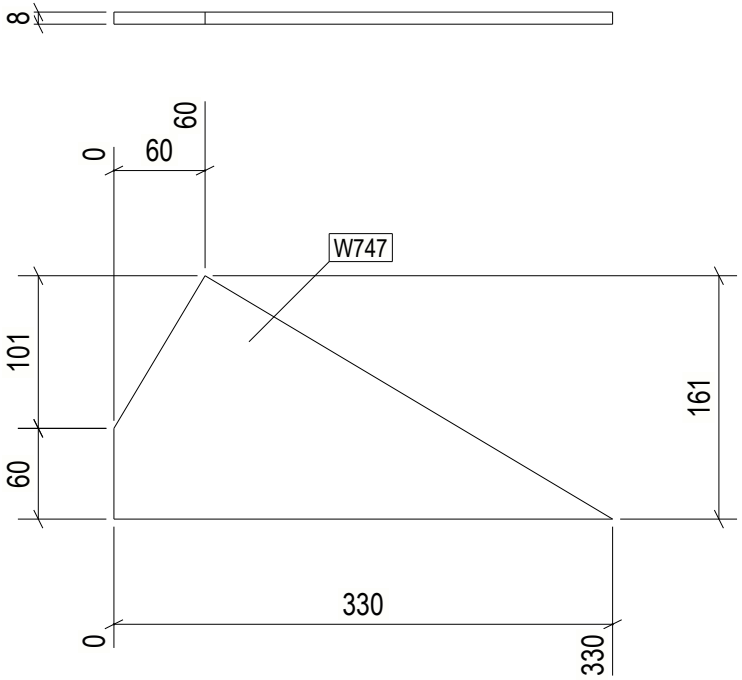

1 REQ'D AS DRAWN MK'D W747

6 October Monorail
Engineering Unit
Valid For Construction

GENERAL NOTES:

1. THE DIMENSIONS SHOWN ARE NOMINAL (IN MILLIMETERS), U.N.O.
2. WELD SIZESHALL BE AISC MINIMUM OF 6 mm UNLESS NOTED OTHERWISE.
3. ALL FIELD WELDS SHALL BE INSPECTED PER QUALITY ASSURANCE AND SPECIAL INSPECTIONS.

REFERENCE DRAWINGS

1	93M-BOA-NAT-LOT-04833
2	93M-BOA-NAT-LOT-09170
3	93M-BOA-NAT-LOT-01976
4	93M-BOA-NAT-LOT-20021
5	
6	
7	
8	
9	

6TH OF OCTOBER CITY RAIL TRANSIT MONORAIL

The Authority | Hill International Consultant | Main Contractor | Structural Designer

KEY PLAN:

SCALE: AS SHOWN | SHOPDRAWING | DATE: 12/09/2023

REV.	DATE	DSG	CHK	APP	AMENDMENTS	STATUS
B	12/05/2023	M.KH	M.KH	DR.M.M	ISSUED FOR INFORMATION	IFI
A	11/20/2022	M.KH	M.KH	DR.M.M	ISSUED FOR INFORMATION	IFI

DRAWING TITLE

6TH OF OCTOBER MONORAIL
SERVICE WALKWAYS
ZONE (1008)
W747

Project Code	Rubric	Initiator	Lot	Ref	Number	Revision
93M047	ACC60	DEP	DWG	0877		B

Tekla structures

approval is subject to approval of coordination package between multi-discipline

REVIEWED WITH COMMENT
MONORAILS PROJECT

All holes are 22mm U.N.O Length & Area & Weight per piece

Mark	Profile	Grade	QTY	Length	Area	Weight
W746	PL8*170.3	S355JR	1	310.7	0.07	1.9

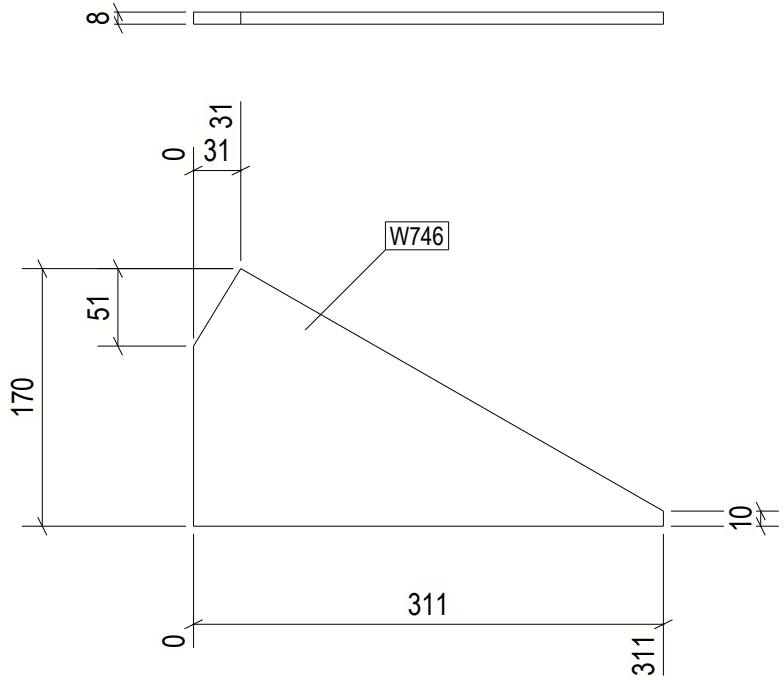

1 REQ'D AS DRAWN MK'D W746

6 October Monorail
Engineering Unit
Valid For Construction

GENERAL NOTES:

1. THE DIMENSIONS SHOWN ARE NOMINAL (IN MILLIMETERS), U.N.O.
2. WELD SIZESHALL BE AISC MINIMUM OF 6 mm UNLESS NOTED OTHERWISE.
3. ALL FIELD WELDS SHALL BE INSPECTED PER QUALITY ASSURANCE AND SPECIAL INSPECTIONS.

REFERENCE DRAWINGS

1	93M-BOA-NAT-LOT-04833
2	93M-BOA-NAT-LOT-09170
3	93M-BOA-NAT-LOT-01976
4	93M-BOA-NAT-LOT-20021
5	
6	
7	
8	
9	

6TH OF OCTOBER CITY RAIL TRANSIT MONORAIL

The Authority | Hill International Consultant | Main Contractor | Structural Designer

KEY PLAN:

SCALE: AS SHOWN | SHOPDRAWING | DATE: 12/09/2023

REV.	DATE	DSG	CHK	APP	AMENDMENTS	STATUS
B	12/05/2023	M.KH	M.KH	DR.BUM	ISSUED FOR INFORMATION	IFI
A	11/20/2022	M.KH	M.KH	DR.BUM	ISSUED FOR INFORMATION	IFI

DRAWING TITLE

6TH OF OCTOBER MONORAIL
SERVICE WALKWAYS
ZONE (1008)
W746

Project Code	Rubric	Initiator	Lot	Ref	Number	Revision
93M	047	6ACC	60DE	PDWG	0877	B

Tekla structures

approval is subject to approval of coordination package between multi-discipline

REVIEWED WITH COMMENT
MONORAILS PROJECT

All holes are 22mm U.N.O Length & Area & Weight per piece

Mark	Profile	Grade	QTY	Length	Area	Weight
W745	CHS48.3*4.0	S235JR	4	75.4	0.01	0.3

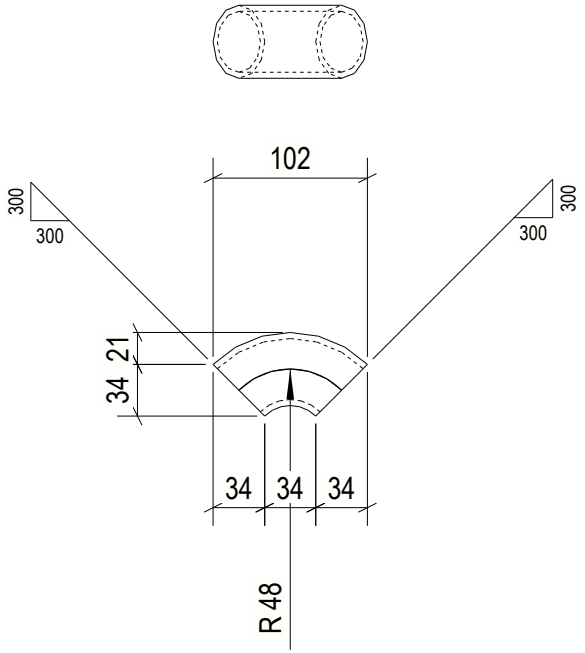

4 REQ'D AS DRAWN MK'D W745

6 October Monorail
Engineering Unit
Valid For Construction

GENERAL NOTES:

1. THE DIMENSIONS SHOWN ARE NOMINAL (IN MILLIMETERS), U.N.O.
2. WELD SIZESHALL BE AISC MINIMUM OF 6 mm UNLESS NOTED OTHERWISE.
3. ALL FIELD WELDS SHALL BE INSPECTED PER QUALITY ASSURANCE AND SPECIAL INSPECTIONS.

REFERENCE DRAWINGS

1	93M-BOA-NAT-LOT-04833
2	93M-BOA-NAT-LOT-09170
3	93M-BOA-NAT-LOT-01976
4	93M-BOA-NAT-LOT-20021
5	
6	
7	
8	
9	

6TH OF OCTOBER CITY RAIL TRANSIT MONORAIL

The Authority — Hill International Consultant — Main Contractor — Structural Designer

KEY PLAN:

SCALE	SHOPDRAWING	DATE
AS SHOWN		12/09/2023

REV	DATE	DSG	CHK	APP	AMENDMENTS	STATUS
B	12/05/2023	M.KH	M.KH	DR.BM	ISSUED FOR INFORMATION	IFI
A	11/20/2022	M.KH	M.KH	DR.BM	ISSUED FOR INFORMATION	IFI

DRAWING TITLE

6TH OF OCTOBER MONORAIL
SERVICE WALKWAYS
ZONE (1008)
W745

Project Code	Rubric	Initiator	Lot	Ref	Number	Revision
9 3 M	0 4 7 6	A C C	6 0 D	E P	D W G	0 8 7 7 8	B

Tekla structures

approval is subject to approval of coordination package between multi-discipline

REVIEWED WITH COMMENT
MONORAILS PROJECT

All holes are 22mm U.N.O Length & Area & Weight per piece

Mark	Profile	Grade	QTY	Length	Area	Weight
W744	CHS48.3*4.0	S235JR	1	53.4	0.01	0.2

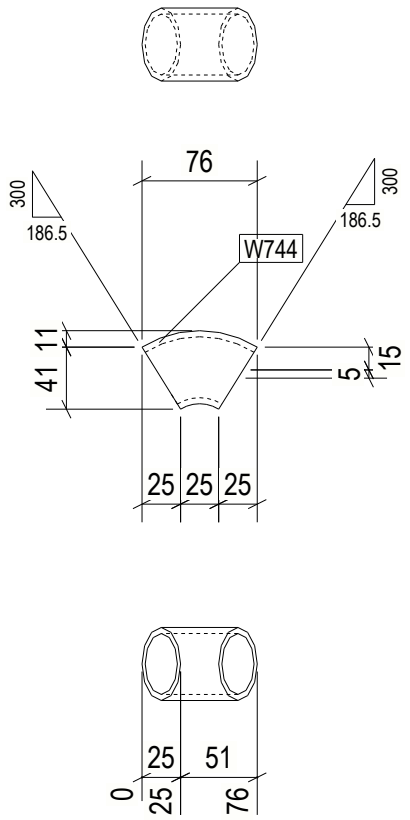

1 REQ'D AS DRAWN MK'D W744

GENERAL NOTES:

1. THE DIMENSIONS SHOWN ARE NOMINAL (IN MILLIMETERS), U.N.O.
2. WELD SIZESHALL BE AISC MINIMUM OF 6 mm UNLESS NOTED OTHERWISE.
3. ALL FIELD WELDS SHALL BE INSPECTED PER QUALITY ASSURANCE AND SPECIAL INSPECTIONS.

REFERENCE DRAWINGS

1	93M-BOA-NAT-LOT-04833
2	93M-BOA-NAT-LOT-09170
3	93M-BOA-NAT-LOT-01976
4	93M-BOA-NAT-LOT-20021
5	
6	
7	
8	
9	

6TH OF OCTOBER CITY RAIL TRANSIT MONORAIL

The Authority — Hill International Consultant — Main Contractor — Structural Designer

KEY PLAN:

6 October Monorail Engineering Unit Valid For Construction

SCALE AS SHOWN | SHOPDRAWING | DATE 12/09/2023

REV	DATE	DSG	CHK	APP	AMENDMENTS	STATUS
B	12/05/2023	M.KH	M.KH	DR.M.M	ISSUED FOR INFORMATION	IFI
A	11/20/2022	M.KH	M.KH	DR.M.M	ISSUED FOR INFORMATION	IFI

DRAWING TITLE
6TH OF OCTOBER MONORAIL
SERVICE WALKWAYS
ZONE (1008)
W744

Project Code	Rubric	Initiator	Lot	Ref	Number	Revision
93M	047	6ACC	60DEP	DWG	0877	B

Tekla structures

approval is subject to approval of coordination package between multi-discipline

REVIEWED WITH COMMENT
MONORAILS PROJECT

All holes are 22mm U.N.O Length & Area & Weight per piece

Mark	Profile	Grade	QTY	Length	Area	Weight
W743	PL12*65	S355JR	3	190.0	0.03	1.2

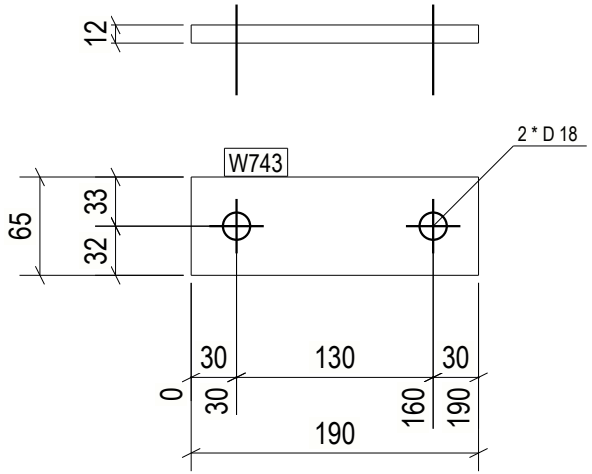

3 REQ'D AS DRAWN MK'D W743

6 October Monorail
Engineering Unit
Valid For Construction

GENERAL NOTES:

1. THE DIMENSIONS SHOWN ARE NOMINAL (IN MILLIMETERS), U.N.O.
2. WELD SIZESHALL BE AISC MINIMUM OF 6 mm UNLESS NOTED OTHERWISE.
3. ALL FIELD WELDS SHALL BE INSPECTED PER QUALITY ASSURANCE AND SPECIAL INSPECTIONS.

REFERENCE DRAWINGS

1	93M-BOA-NAT-LOT-04833
2	93M-BOA-NAT-LOT-09170
3	93M-BOA-NAT-LOT-01976
4	93M-BOA-NAT-LOT-20021
5	
6	
7	
8	
9	

6TH OF OCTOBER CITY RAIL TRANSIT MONORAIL

The Authority | Hill International Consultant | Main Contractor | Structural Designer

KEY PLAN:

REV.	DATE	DSG	CHK	APP	AMENDMENTS	STATUS
B	12/05/2023	M.KH	M.KH	DR.M.M	ISSUED FOR INFORMATION	IFI
A	11/20/2022	M.KH	M.KH	DR.M.M	ISSUED FOR INFORMATION	IFI

SCALE: AS SHOWN | SHOPDRAWING | DATE: 12/05/2023

DRAWING TITLE
6TH OF OCTOBER MONORAIL
SERVICE WALKWAYS
ZONE (1008)
W743

Project Code	Rubric	Initiator	Lot	Ref	Number	Revision
9 3 M	0 4 7 6	A C C	6 0	D E P	D W G	0 8 7 8 0	B

Tekla structures

approval is subject to approval of coordination package between multi-discipline

REVIEWED WITH COMMENT
MONORAILS PROJECT

All holes are 22mm U.N.O Length & Area & Weight per piece

Mark	Profile	Grade	QTY	Length	Area	Weight
W742	PL12*65	S355JR	6	190.0	0.03	1.2

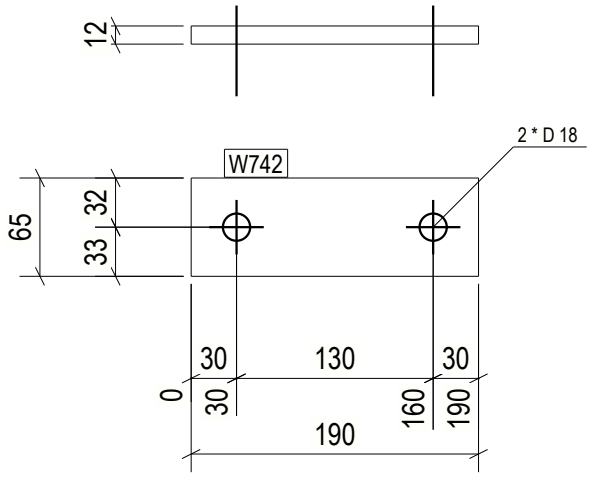

6 REQ'D AS DRAWN MK'D W742

6 October Monorail
Engineering Unit
Valid For Construction

GENERAL NOTES:

1. THE DIMENSIONS SHOWN ARE NOMINAL (IN MILLIMETERS), U.N.O.
2. WELD SIZESHALL BE AISC MINIMUM OF 6 mm UNLESS NOTED OTHERWISE.
3. ALL FIELD WELDS SHALL BE INSPECTED PER QUALITY ASSURANCE AND SPECIAL INSPECTIONS.

REFERENCE DRAWINGS

1	93M-BOA-NAT-LOT-04833
2	93M-BOA-NAT-LOT-09170
3	93M-BOA-NAT-LOT-01976
4	93M-BOA-NAT-LOT-20021
5	
6	
7	
8	
9	

6TH OF OCTOBER CITY RAIL TRANSIT MONORAIL

The Authority | Hill International Consultant | Main Contractor | Structural Designer

KEY PLAN:

REV.	DATE	DSG	CHK	APP	AMENDMENTS	STATUS
B	12/05/2023	M.KH	M.KH	DR.M.M	ISSUED FOR INFORMATION	IFI
A	11/20/2022	M.KH	M.KH	DR.M.M	ISSUED FOR INFORMATION	IFI

SCALE: AS SHOWN | SHOPDRAWING | DATE: 12/05/2023

DRAWING TITLE
6TH OF OCTOBER MONORAIL
SERVICE WALKWAYS
ZONE (1008)
W742

Project Code	Rubric	Initiator	Lot	Ref	Number	Revision
93M	047	ACC	60DEP	DWG	0878	B

Tekla structures

approval is subject to approval of coordination package between multi-discipline

REVIEWED WITH COMMENT MONORAILS PROJECT

All holes are 22mm U.N.O Length & Area & Weight per piece						
W741	PL8*286.9	S355-JR	2	467.3	0.23	7.0
Mark	Profile	Grade	QTY	Length	Area	Weight

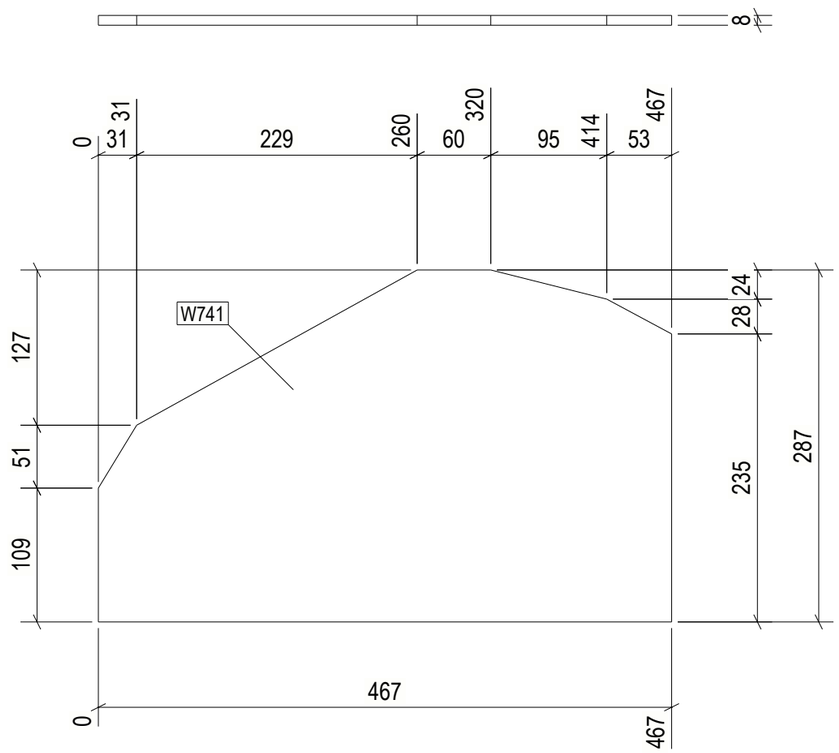

2 REQ'D AS DRAWN MK'D W741

6 October Monorail Engineering Unit
Valid For Construction

GENERAL NOTES:

1. THE DIMENSIONS SHOWN ARE NOMINAL (IN MILLIMETERS), U.N.O.
2. WELD SIZESHALL BE AISC MINIMUM OF 6 mm UNLESS NOTED OTHERWISE.
3. ALL FIELD WELDS SHALL BE INSPECTED PER QUALITY ASSURANCE AND SPECIAL INSPECTIONS.

REFERENCE DRAWINGS

1	93M-BOA-NAT-LOT-04833
2	93M-BOA-NAT-LOT-09170
3	93M-BOA-NAT-LOT-01976
4	93M-BOA-NAT-LOT-20021
5	
6	
7	
8	
9	

6TH OF OCTOBER CITY RAIL TRANSIT MONORAIL

The Authority | Hill International Consultant | Main Contractor | Structural Designer

KEY PLAN:

SCALE	SHOP DRAWING	DATE
AS SHOWN		12/05/2023

REV	DATE	DSG	CHK	APP	AMENDMENTS	STATUS
B	12/05/2023	M.KH	M.KH	DR.M.M	ISSUED FOR INFORMATION	IFI

DRAWING TITLE

6TH OF OCTOBER MONORAIL SERVICE WALKWAYS ZONE (1008) W741

Project Code	Rubric	Initiator	Lot	Ref	Number	Revision
93M	0476	ACC	60DEP	DWG	08782	B

Tekla structures

approval is subject to approval of coordination package between multi-discipline

REVIEWED WITH COMMENT
MONORAILS PROJECT

All holes are 22mm U.N.O Length & Area & Weight per piece

Mark	Profile	Grade	QTY	Length	Area	Weight
W740	PL8*221.1	S355JR	1	615.8	0.25	7.5

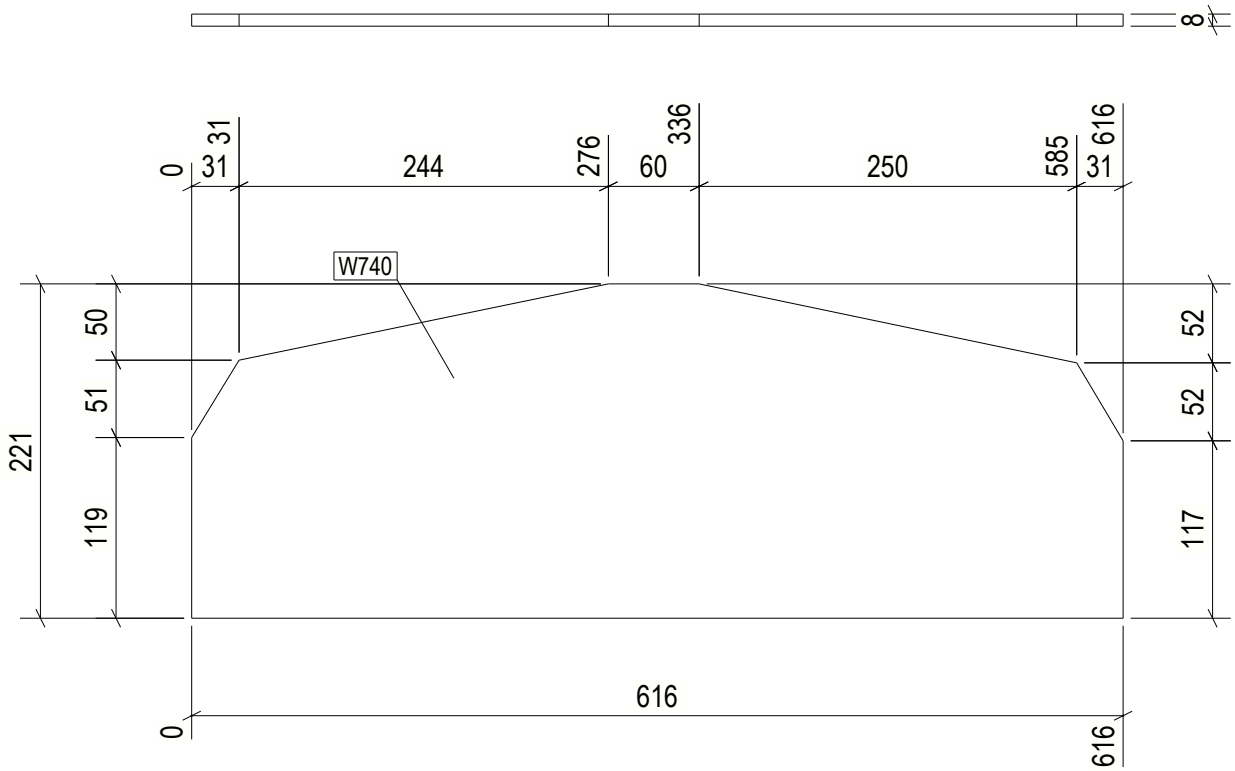

1 REQ'D AS DRAWN MK'D W740

6 October Monorail
Engineering Unit
Valid For Construction

GENERAL NOTES:

1. THE DIMENSIONS SHOWN ARE NOMINAL (IN MILLIMETERS), U.N.O.
2. WELD SIZESHALL BE AISC MINIMUM OF 6 mm UNLESS NOTED OTHERWISE.
3. ALL FIELD WELDS SHALL BE INSPECTED PER QUALITY ASSURANCE AND SPECIAL INSPECTIONS.

REFERENCE DRAWINGS

1	93M-BOA-NAT-LOT-04833
2	93M-BOA-NAT-LOT-09170
3	93M-BOA-NAT-LOT-01976
4	93M-BOA-NAT-LOT-20021
5	
6	
7	
8	
9	

6TH OF OCTOBER CITY RAIL TRANSIT MONORAIL

The Authority — Hill International Consultant — Main Contractor — Structural Designer

KEY PLAN:

REV.	DATE	DSG	CHK	APP	AMENDMENTS	STATUS
B	12/05/2023	M.KH	M.KH	DR.BIM	ISSUED FOR INFORMATION	IFI
A	11/20/2022	M.KH	M.KH	DR.BIM	ISSUED FOR INFORMATION	IFI

SCALE: AS SHOWN | SHOPDRAWING | DATE: 12/05/2023

DRAWING TITLE
6TH OF OCTOBER MONORAIL
SERVICE WALKWAYS
ZONE (1008)
W740

Project Code	Rubric	Initiator	Lot	Ref	Number	Revision
9 3 M	0 4 7 6	A C C	6 0 D	E P	D W G	0 8 7 8 3	B

Tekla structures

approval is subject to approval of coordination package between multi-discipline

REVIEWED WITH COMMENT MONORAILS PROJECT

All holes are 22mm U.N.O Length & Area & Weight per piece						
W739	PL8*286.9	S355-JR	1	491.3	0.25	7.4
Mark	Profile	Grade	QTY	Length	Area	Weight

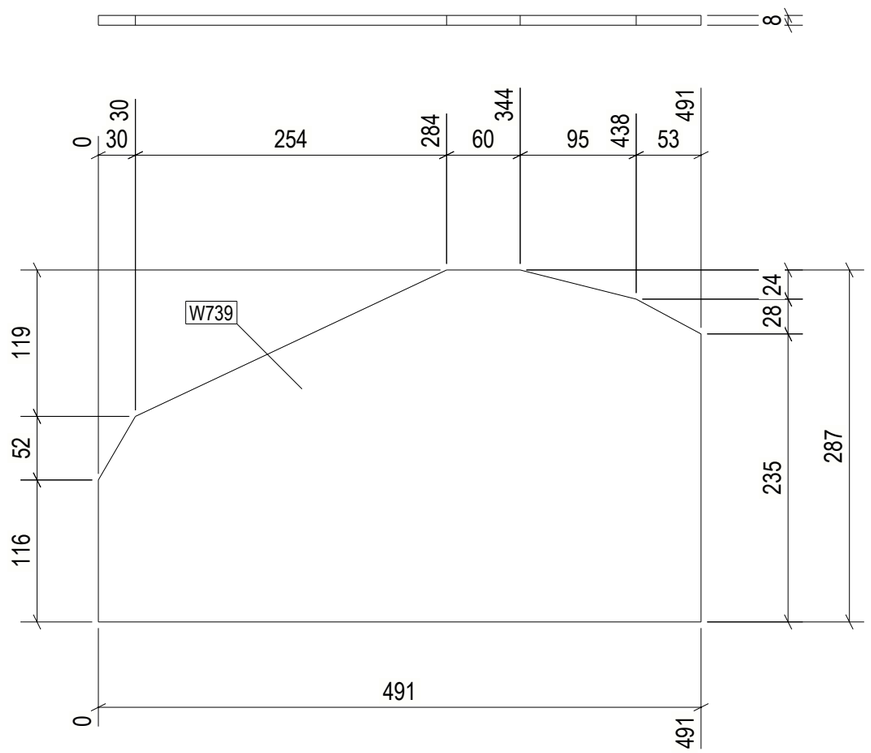

1 REQ'D AS DRAWN MK'D W739

6 October Monorail Engineering Unit
Valid For Construction

GENERAL NOTES:

1. THE DIMENSIONS SHOWN ARE NOMINAL (IN MILLIMETERS), U.N.O.
2. WELD SIZESHALL BE AISC MINIMUM OF 6 mm UNLESS NOTED OTHERWISE.
3. ALL FIELD WELDS SHALL BE INSPECTED PER QUALITY ASSURANCE AND SPECIAL INSPECTIONS.

REFERENCE DRAWINGS

1	93M-BOA-NAT-LOT-04833
2	93M-BOA-NAT-LOT-09170
3	93M-BOA-NAT-LOT-01976
4	93M-BOA-NAT-LOT-20021
5	
6	
7	
8	
9	

6TH OF OCTOBER CITY RAIL TRANSIT MONORAIL

The Authority | Hill International Consultant | ORASCOM BOMBARDIER Main Contractor | INNOVA Structural Designer

KEY PLAN:

SCALE	SHOP DRAWING	DATE
AS SHOWN		12/05/2023

REV	DATE	DSN	CHK	APP	AMENDMENTS	STATUS
B	12/05/2023	M.KH	M.KH	DR.M.M	ISSUED FOR INFORMATION	IFI

DRAWING TITLE

6TH OF OCTOBER MONORAIL SERVICE WALKWAYS ZONE (1008) W739

Project Code	Rubric	Initiator	Lot	Ref	Number	Revision
93M	0476	ACC	60DEP	DWG	08784	B

Tekla structures

approval is subject to approval of coordination package between multi-discipline

REVIEWED WITH COMMENT
MONORAILS PROJECT

All holes are 22mm U.N.O Length & Area & Weight per piece

Mark	Profile	Grade	QTY	Length	Area	Weight
W738	PL8*132.4	S355JR	1	297.8	0.05	1.4

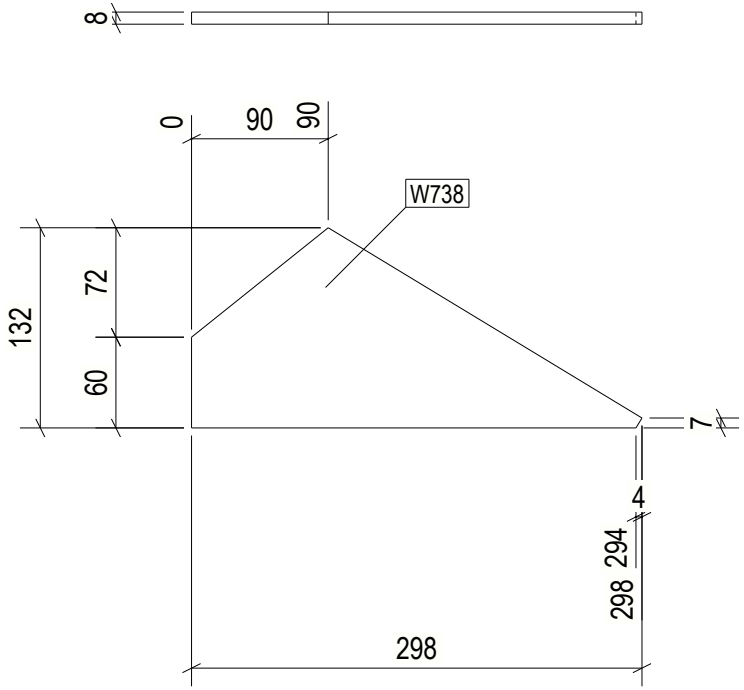

1 REQ'D AS DRAWN MK'D W738

6 October Monorail
Engineering Unit
Valid For Construction

GENERAL NOTES:

1. THE DIMENSIONS SHOWN ARE NOMINAL (IN MILLIMETERS), U.N.O.
2. WELD SIZESHALL BE AISC MINIMUM OF 6 mm UNLESS NOTED OTHERWISE.
3. ALL FIELD WELDS SHALL BE INSPECTED PER QUALITY ASSURANCE AND SPECIAL INSPECTIONS.

REFERENCE DRAWINGS

1	93M-BOA-NAT-LOT-04833
2	93M-BOA-NAT-LOT-09170
3	93M-BOA-NAT-LOT-01976
4	93M-BOA-NAT-LOT-20021
5	
6	
7	
8	
9	

6TH OF OCTOBER CITY RAIL TRANSIT MONORAIL

The Authority | Hill International Consultant | Main Contractor | Structural Designer

KEY PLAN:

REV.	DATE	DSG	CHK	APP	AMENDMENTS	STATUS
B	12/05/2023	M.KH	M.KH	DR.BM	ISSUED FOR INFORMATION	IFI
A	11/20/2022	M.KH	M.KH	DR.BM	ISSUED FOR INFORMATION	IFI

SCALE: AS SHOWN | SHOPDRAWING | DATE: 12/05/2023

DRAWING TITLE
6TH OF OCTOBER MONORAIL
SERVICE WALKWAYS
ZONE (1008)
W738

Project Code	Rubric	Initiator	Lot	Ref	Number	Revision
93M047	ACC60	DEP	DWG	0878	5	B

Tekla structures

approval is subject to approval of coordination package between multi-discipline

REVIEWED WITH COMMENT
MONORAILS PROJECT

All holes are 22mm U.N.O Length & Area & Weight per piece

Mark	Profile	Grade	QTY	Length	Area	Weight
W737	PL8*228.2	S355JR	1	594.0	0.24	7.3

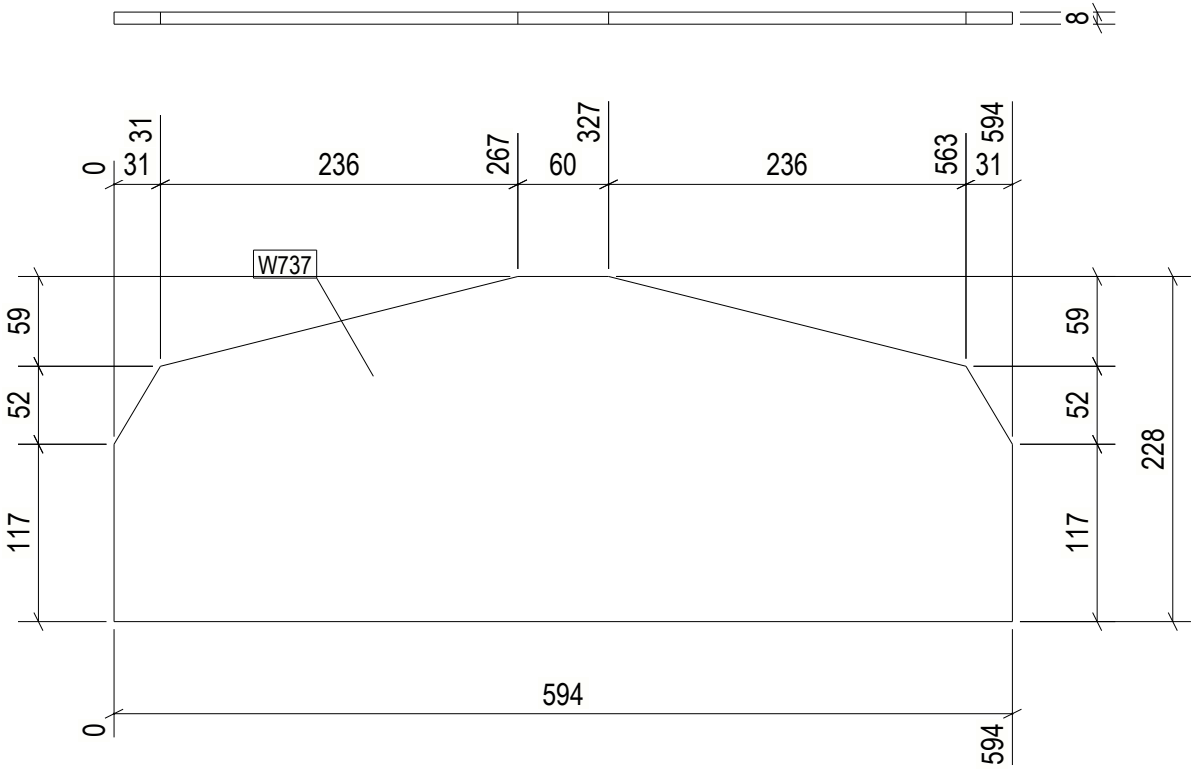

1 REQ'D AS DRAWN MK'D W737

6 October Monorail
Engineering Unit
Valid For Construction

GENERAL NOTES:

1. THE DIMENSIONS SHOWN ARE NOMINAL (IN MILLIMETERS), U.N.O.
2. WELD SIZESHALL BE AISC MINIMUM OF 6 mm UNLESS NOTED OTHERWISE.
3. ALL FIELD WELDS SHALL BE INSPECTED PER QUALITY ASSURANCE AND SPECIAL INSPECTIONS.

REFERENCE DRAWINGS

1	93M-BOA-NAT-LOT-04833
2	93M-BOA-NAT-LOT-09170
3	93M-BOA-NAT-LOT-01976
4	93M-BOA-NAT-LOT-20021
5	
6	
7	
8	
9	

6TH OF OCTOBER CITY RAIL TRANSIT MONORAIL

The Authority | Hill International Consultant | Main Contractor | Structural Designer

KEY PLAN:

SCALE: AS SHOWN | SHOPDRAWING | DATE: 12/09/2023

REV	DATE	DSG	CHK	APP	AMENDMENTS	STATUS
B	12/05/2023	M.KH	M.KH	DR.M.M	ISSUED FOR INFORMATION	IFI
A	11/20/2022	M.KH	M.KH	DR.M.M	ISSUED FOR INFORMATION	IFI

DRAWING TITLE

6TH OF OCTOBER MONORAIL
SERVICE WALKWAYS
ZONE (1008)
W737

Project Code	Rubric	Initiator	Lot	Ref	Number	Revision
93M	047	ACC	60	DEP	DWG	0878	B

Tekla structures

approval is subject to approval of coordination package between multi-discipline

REVIEWED WITH COMMENT
MONORAILS PROJECT

All holes are 22mm U.N.O Length & Area & Weight per piece

Mark	Profile	Grade	QTY	Length	Area	Weight
W736	PL8*169.2	S355JR	6	238.1	0.06	1.6

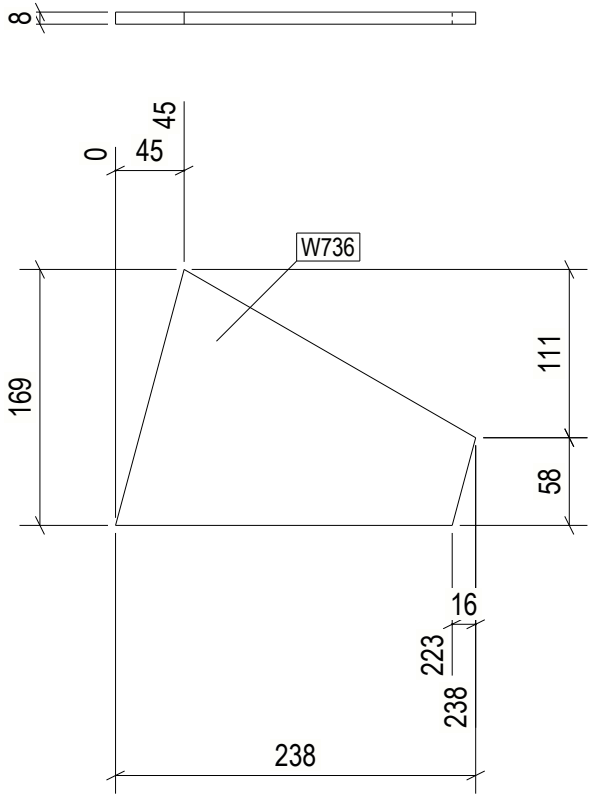

6 REQ'D AS DRAWN MK'D W736

6 October Monorail
Engineering Unit
Valid For Construction

GENERAL NOTES:

1. THE DIMENSIONS SHOWN ARE NOMINAL (IN MILLIMETERS), U.N.O.
2. WELD SIZESHALL BE AISC MINIMUM OF 6 mm UNLESS NOTED OTHERWISE.
3. ALL FIELD WELDS SHALL BE INSPECTED PER QUALITY ASSURANCE AND SPECIAL INSPECTIONS.

REFERENCE DRAWINGS

1	93M-BOA-NAT-LOT-04833
2	93M-BOA-NAT-LOT-09170
3	93M-BOA-NAT-LOT-01976
4	93M-BOA-NAT-LOT-20021
5	
6	
7	
8	
9	

6TH OF OCTOBER CITY RAIL TRANSIT MONORAIL

The Authority — Hill International Consultant — Main Contractor — Structural Designer

KEY PLAN:

REV.	DATE	DSG	CHK	APP	AMENDMENTS	STATUS
B	12/05/2023	M.KH	M.KH	DR.M.M	ISSUED FOR INFORMATION	IFI
A	11/20/2022	M.KH	M.KH	DR.M.M	ISSUED FOR INFORMATION	IFI

SCALE: AS SHOWN | SHOPDRAWING | DATE: 12/05/2023

DRAWING TITLE
6TH OF OCTOBER MONORAIL
SERVICE WALKWAYS
ZONE (1008)
W736

Project Code	Rubric	Initiator	Lot	Ref	Number	Revision
9 3 M	0 4 7 6	A C C	6 0 D E P	D W G	0 8 7 8 7	B

Tekla structures

approval is subject to approval of coordination package between multi-discipline

REVIEWED WITH COMMENT
MONORAILS PROJECT

All holes are 22mm U.N.O Length & Area & Weight per piece

Mark	Profile	Grade	QTY	Length	Area	Weight
W735	PL8*126.3	S355JR	8	167.9	0.03	1.0

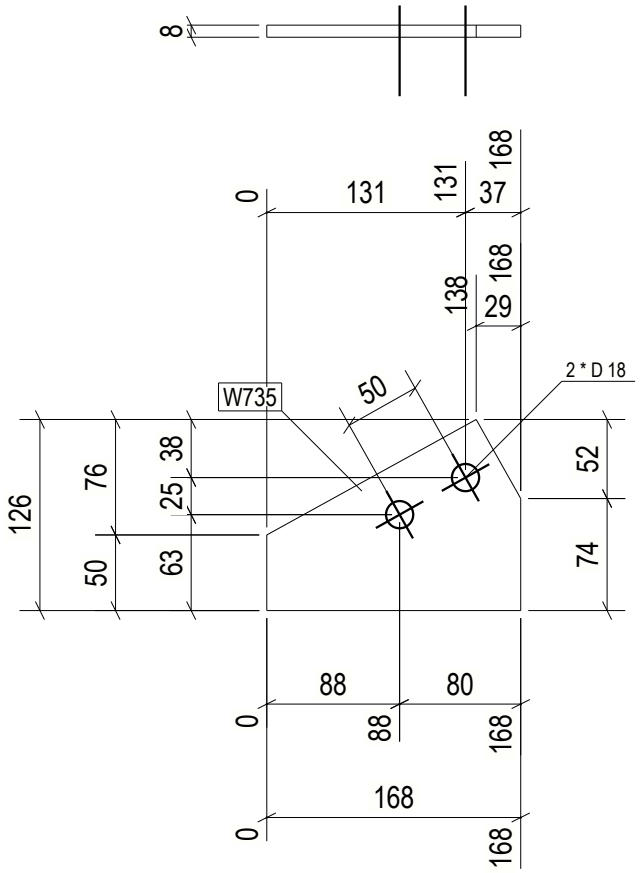

8 REQ'D AS DRAWN MK'D W735

6 October Monorail
Engineering Unit
Valid For Construction

Tekla structures

GENERAL NOTES:

1. THE DIMENSIONS SHOWN ARE NOMINAL (IN MILLIMETERS), U.N.O.
2. WELD SIZESHALL BE AISC MINIMUM OF 6 mm UNLESS NOTED OTHERWISE.
3. ALL FIELD WELDS SHALL BE INSPECTED PER QUALITY ASSURANCE AND SPECIAL INSPECTIONS.

REFERENCE DRAWINGS

1	93M-BOA-NAT-LOT-04833
2	93M-BOA-NAT-LOT-09170
3	93M-BOA-NAT-LOT-01976
4	93M-BOA-NAT-LOT-20021
5	
6	
7	
8	
9	

6TH OF OCTOBER CITY RAIL TRANSIT MONORAIL

The Authority | Hill International Consultant | Main Contractor | Structural Designer

KEY PLAN:

SCALE: AS SHOWN | SHOPDRAWING | DATE: 12/09/2023

REV.	DATE	DSG	CHK	APP	AMENDMENTS	STATUS
B	12/05/2023	M.KH	M.KH	DR.BM	ISSUED FOR INFORMATION	IFI
A	11/20/2022	M.KH	M.KH	DR.BM	ISSUED FOR INFORMATION	IFI

DRAWING TITLE

6TH OF OCTOBER MONORAIL
SERVICE WALKWAYS
ZONE (1008)
W735

Project Code	Rubric	Initiator	Lot	Ref	Number	Revision
93M	047	ACC	60	DEP	DWG	0878	B

approval is subject to approval of coordination package between multi-discipline

REVIEWED WITH COMMENT MONORAILS PROJECT

All holes are 22mm U.N.O Length & Area & Weight per piece

Mark	Profile	Grade	QTY	Length	Area	Weight
W734	PL8*252.9	S355JR	2	482.9	0.21	6.1

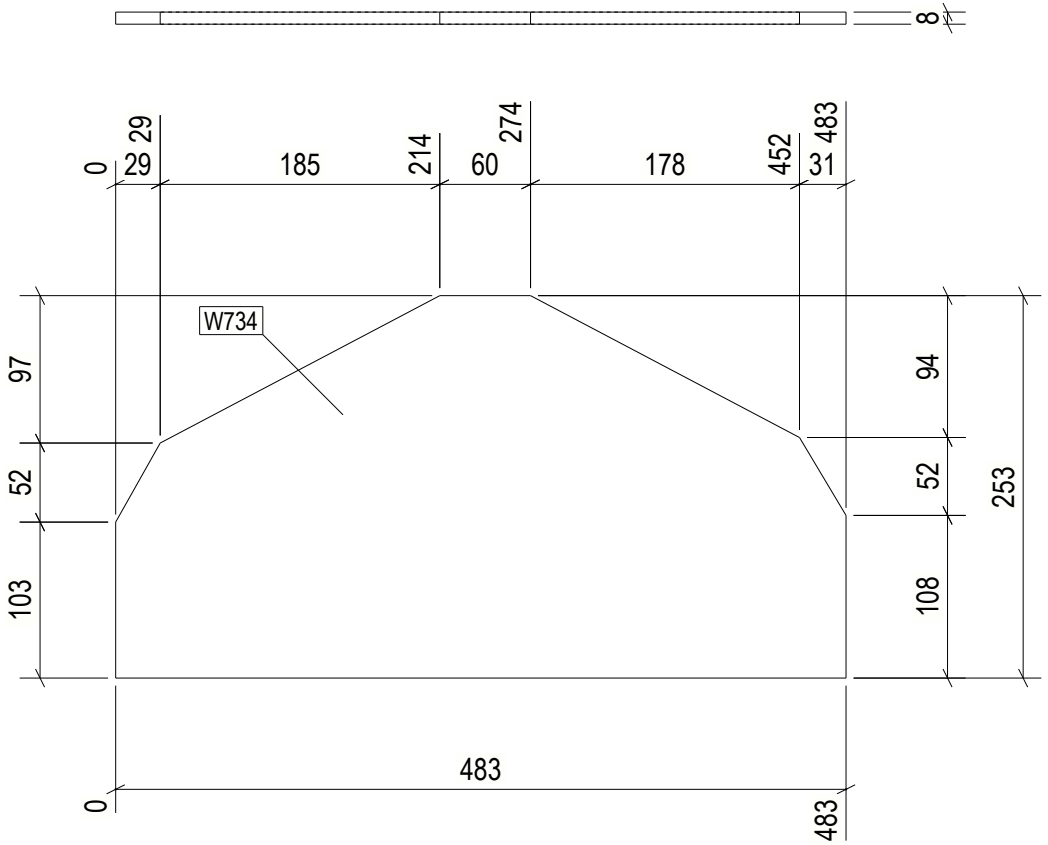

2 REQ'D AS DRAWN MK'D W734

6 October Monorail
Engineering Unit
Valid For Construction

GENERAL NOTES:

1. THE DIMENSIONS SHOWN ARE NOMINAL (IN MILLIMETERS), U.N.O.
2. WELD SIZESHALL BE AISC MINIMUM OF 6 mm UNLESS NOTED OTHERWISE.
3. ALL FIELD WELDS SHALL BE INSPECTED PER QUALITY ASSURANCE AND SPECIAL INSPECTIONS.

REFERENCE DRAWINGS

1	93M-BOA-NAT-LOT-04833
2	93M-BOA-NAT-LOT-09170
3	93M-BOA-NAT-LOT-01976
4	93M-BOA-NAT-LOT-20021
5	
6	
7	
8	
9	

6TH OF OCTOBER CITY RAIL TRANSIT MONORAIL

The Authority | Hill International Consultant | Main Contractor | Structural Designer

KEY PLAN:

REV.	DATE	DSG	CHK	APP	AMENDMENTS	STATUS
B	12/05/2023	M.KH	M.KH	DR.BUM	ISSUED FOR INFORMATION	IFI
A	11/20/2022	M.KH	M.KH	DR.BUM	ISSUED FOR INFORMATION	IFI

SCALE AS SHOWN | SHOPDRAWING | DATE 12/05/2023

DRAWING TITLE
6TH OF OCTOBER MONORAIL
SERVICE WALKWAYS
ZONE (1008)
W734

Project Code	Rubric	Initiator	Lot	Ref	Number	Revision
9 3 M	0 4 7 6	A C C	6 0 D	E P	D W G	0 8 7 8 9	B

Tekla structures

approval is subject to approval of coordination package between multi-discipline

REVIEWED WITH COMMENT
MONORAILS PROJECT

All holes are 22mm U.N.O Length & Area & Weight per piece

Mark	Profile	Grade	QTY	Length	Area	Weight
W733	PL8*169.1	S355JR	1	292.6	0.07	2.1

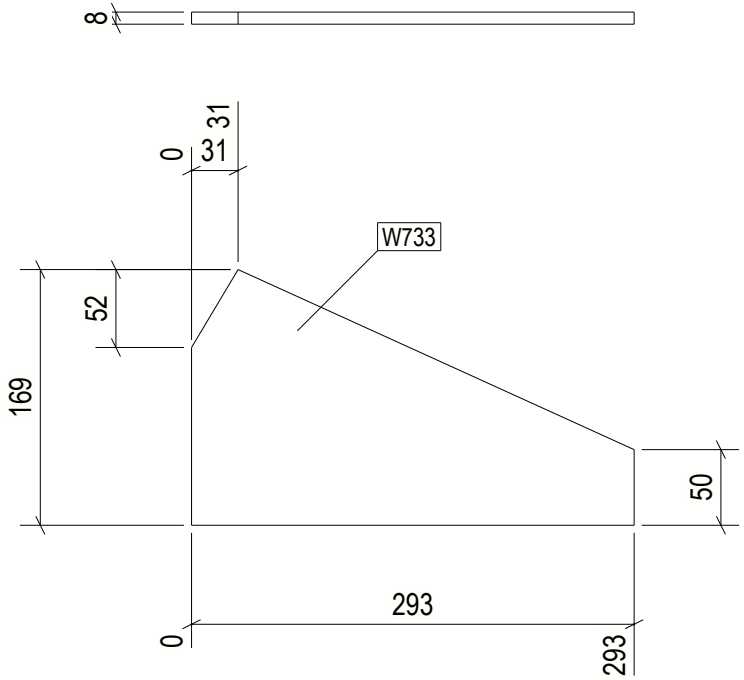

1 REQ'D AS DRAWN MK'D W733

6 October Monorail
Engineering Unit
Valid For Construction

GENERAL NOTES:

1. THE DIMENSIONS SHOWN ARE NOMINAL (IN MILLIMETERS), U.N.O.
2. WELD SIZESHALL BE AISC MINIMUM OF 6 mm UNLESS NOTED OTHERWISE.
3. ALL FIELD WELDS SHALL BE INSPECTED PER QUALITY ASSURANCE AND SPECIAL INSPECTIONS.

REFERENCE DRAWINGS

1	93M-BOA-NAT-LOT-04833
2	93M-BOA-NAT-LOT-09170
3	93M-BOA-NAT-LOT-01976
4	93M-BOA-NAT-LOT-20021
5	
6	
7	
8	
9	

6TH OF OCTOBER CITY RAIL TRANSIT MONORAIL

The Authority | Hill International Consultant | Main Contractor | Structural Designer

KEY PLAN:

REV.	DATE	DSG	CHK	APP	AMENDMENTS	STATUS
B	12/05/2023	M.KH	M.KH	DR.BM	ISSUED FOR INFORMATION	IFI
A	11/20/2022	M.KH	M.KH	DR.BM	ISSUED FOR INFORMATION	IFI

SCALE: AS SHOWN | SHOPDRAWING | DATE: 12/05/2023

DRAWING TITLE
6TH OF OCTOBER MONORAIL
SERVICE WALKWAYS
ZONE (1008)
W733

Project Code	Rubric	Initiator	Lot	Ref	Number	Revision
9 3 M 0 4 7 6	A C C	6 0 D E P	D W G	0 8 7 9 0		B

Tekla structures

approval is subject to approval of coordination package between multi-discipline

REVIEWED WITH COMMENT
MONORAILS PROJECT

All holes are 22mm U.N.O Length & Area & Weight per piece

Mark	Profile	Grade	QTY	Length	Area	Weight
W732	PL8*164.1	S355JR	4	227.8	0.05	1.5

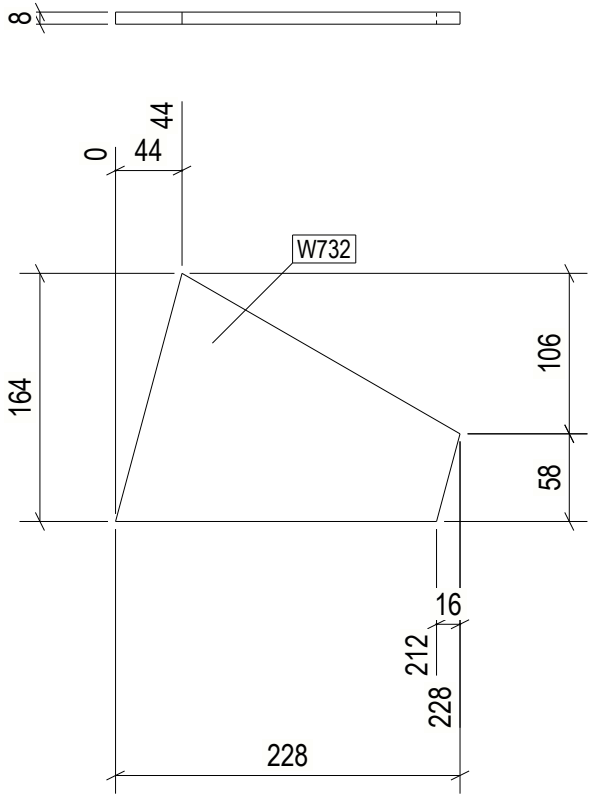

4 REQ'D AS DRAWN MK'D W732

6 October Monorail
Engineering Unit
Valid For Construction

GENERAL NOTES:

1. THE DIMENSIONS SHOWN ARE NOMINAL (IN MILLIMETERS), U.N.O.
2. WELD SIZESHALL BE AISC MINIMUM OF 6 mm UNLESS NOTED OTHERWISE.
3. ALL FIELD WELDS SHALL BE INSPECTED PER QUALITY ASSURANCE AND SPECIAL INSPECTIONS.

REFERENCE DRAWINGS

1	93M-BOA-NAT-LOT-04833
2	93M-BOA-NAT-LOT-09170
3	93M-BOA-NAT-LOT-01976
4	93M-BOA-NAT-LOT-20021
5	
6	
7	
8	
9	

6TH OF OCTOBER CITY RAIL TRANSIT MONORAIL

The Authority | Hill International Consultant | Main Contractor | Structural Designer

KEY PLAN:

REV.	DATE	DSG	CHK	APP	AMENDMENTS	STATUS
B	12/05/2023	M.KH	M.KH	DR.BM	ISSUED FOR INFORMATION	IFI
A	11/20/2022	M.KH	M.KH	DR.BM	ISSUED FOR INFORMATION	IFI

SCALE: AS SHOWN | SHOPDRAWING | DATE: 12/05/2023

DRAWING TITLE
6TH OF OCTOBER MONORAIL
SERVICE WALKWAYS
ZONE (1008)
W732

Project Code	Rubric	Initiator	Lot	Ref	Number	Revision
9 3 M	0 4 7 6	A C C	6 0 D E P	D W G	0 8 7 9 1	B

Tekla structures

approval is subject to approval of coordination package between multi-discipline

REVIEWED WITH COMMENT
MONORAILS PROJECT

All holes are 22mm U.N.O Length & Area & Weight per piece						
W731	PL8*316.1	S355-JR	2	423.7	0.23	6.9
Mark	Profile	Grade	QTY	Length	Area	Weight

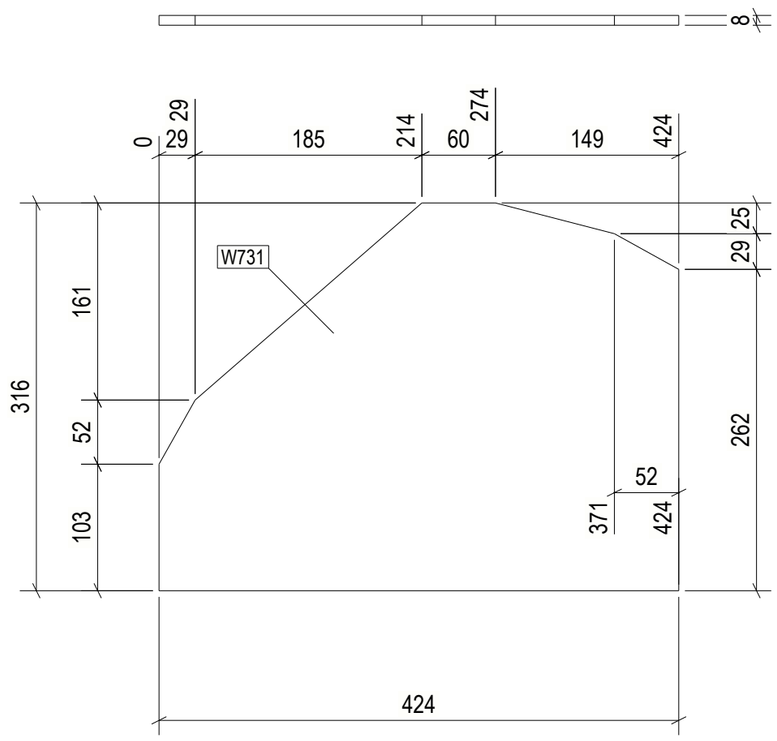

2 REQ'D AS DRAWN MK'D W731

GENERAL NOTES:

1. THE DIMENSIONS SHOWN ARE NOMINAL (IN MILLIMETERS), U.N.O.
2. WELD SIZESHALL BE AISC MINIMUM OF 6 mm UNLESS NOTED OTHERWISE.
3. ALL FIELD WELDS SHALL BE INSPECTED PER QUALITY ASSURANCE AND SPECIAL INSPECTIONS.

REFERENCE DRAWINGS

1	93M-BOA-NAT-LOT-04833
2	93M-BOA-NAT-LOT-09170
3	93M-BOA-NAT-LOT-01976
4	93M-BOA-NAT-LOT-20021
5	
6	
7	
8	
9	

6TH OF OCTOBER CITY RAIL TRANSIT MONORAIL

The Authority | Consultant: Hill International | Main Contractor | Structural Designer

KEY PLAN:

6 October Monorail Engineering Unit Valid For Construction

SCALE	SHOP DRAWING	DATE
AS SHOWN		12/05/2023

REV	DATE	DWN	CHK	APP	AMENDMENT DESCRIPTION	STATUS
B	12/05/2023	M.KH	M.KH	DR.M.M	ISSUED FOR INFORMATION	IFI

DRAWING TITLE

6TH OF OCTOBER MONORAIL SERVICE WALKWAYS ZONE (1008) W731

Project Code	Rubric	Initiator	Lot	Ref	Number	Revision
9 3	M 0 4 7 6	A C C	6 0 D E P	D W G	0 8 7 9 2	B

Tekla structures

approval is subject to approval of coordination package between multi-discipline

REVIEWED WITH COMMENT
MONORAILS PROJECT

All holes are 22mm U.N.O Length & Area & Weight per piece

Mark	Profile	Grade	QTY	Length	Area	Weight
W730	PL8*120.2	S355JR	4	185.2	0.04	1.0

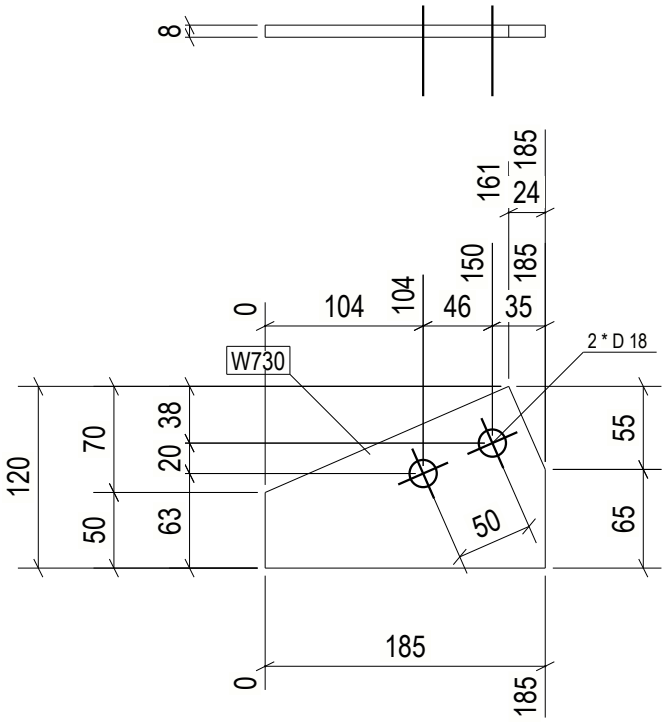

4 REQ'D AS DRAWN MK'D W730

6 October Monorail
Engineering Unit
Valid For Construction

GENERAL NOTES:

1. THE DIMENSIONS SHOWN ARE NOMINAL (IN MILLIMETERS), U.N.O.
2. WELD SIZESHALL BE AISC MINIMUM OF 6 mm UNLESS NOTED OTHERWISE.
3. ALL FIELD WELDS SHALL BE INSPECTED PER QUALITY ASSURANCE AND SPECIAL INSPECTIONS.

REFERENCE DRAWINGS

1	93M-BOA-NAT-LOT-04833
2	93M-BOA-NAT-LOT-09170
3	93M-BOA-NAT-LOT-01976
4	93M-BOA-NAT-LOT-20021
5	
6	
7	
8	
9	

6TH OF OCTOBER CITY RAIL TRANSIT MONORAIL

The Authority | Hill International Consultant | Main Contractor | Structural Designer

KEY PLAN:

SCALE: AS SHOWN | SHOPDRAWING | DATE: 12/09/2023

REV.	DATE	DSG	CHK	APP	AMENDMENTS	STATUS
B	12/05/2023	M.KH	M.KH	DR.M.M	ISSUED FOR INFORMATION	IFI
A	11/20/2022	M.KH	M.KH	DR.M.M	ISSUED FOR INFORMATION	IFI

DRAWING TITLE

6TH OF OCTOBER MONORAIL
SERVICE WALKWAYS
ZONE (1008)
W730

Project Code	Rubric	Initiator	Lot	Ref	Number	Revision
9 3 M	0 4 7 6	A C C	6 0 D	E P	D W G	0 8 7 9 3	B

Tekla structures

approval is subject to approval of coordination package between multi-discipline

REVIEWED WITH COMMENT
MONORAILS PROJECT

All holes are 22mm U.N.O Length & Area & Weight per piece

Mark	Profile	Grade	QTY	Length	Area	Weight
W729	PL8*120.8	S355JR	4	183.4	0.04	1.0

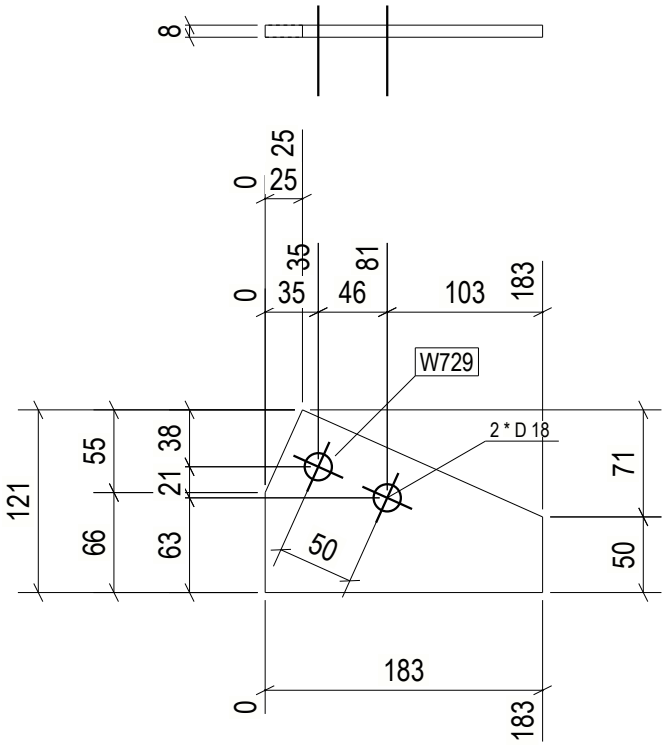

4 REQ'D AS DRAWN MK'D W729

6 October Monorail
Engineering Unit
Valid For Construction

GENERAL NOTES:

1. THE DIMENSIONS SHOWN ARE NOMINAL (IN MILLIMETERS), U.N.O.
2. WELD SIZESHALL BE AISC MINIMUM OF 6 mm UNLESS NOTED OTHERWISE.
3. ALL FIELD WELDS SHALL BE INSPECTED PER QUALITY ASSURANCE AND SPECIAL INSPECTIONS.

REFERENCE DRAWINGS

1	93M-BOA-NAT-LOT-04833
2	93M-BOA-NAT-LOT-09170
3	93M-BOA-NAT-LOT-01976
4	93M-BOA-NAT-LOT-20021
5	
6	
7	
8	
9	

6TH OF OCTOBER CITY RAIL TRANSIT MONORAIL

The Authority | Hill International Consultant | Main Contractor | Structural Designer

KEY PLAN:

SCALE	SHOPDRAWING	DATE
AS SHOWN		12/09/2023

REV	DATE	DSG	CHK	APP	AMENDMENTS	STATUS
B	12/05/2023	M.KH	M.KH	DR.M.M	ISSUED FOR INFORMATION	IFI
A	11/20/2022	M.KH	M.KH	DR.M.M	ISSUED FOR INFORMATION	IFI

DRAWING TITLE

6TH OF OCTOBER MONORAIL
SERVICE WALKWAYS
ZONE (1008)
W729

Project Code	Rubric	Initiator	Lot	Ref	Number	Revision
9 3 M	0 4 7 6	A C C	6 0 D E P	D W G	0 8 7 9 4	B

Tekla structures

approval is subject to approval of coordination package between multi-discipline

REVIEWED WITH COMMENT
MONORAILS PROJECT

All holes are 22mm U.N.O Length & Area & Weight per piece

Mark	Profile	Grade	QTY	Length	Area	Weight
W728	PL8*125.8	S355JR	8	169.4	0.03	1.0

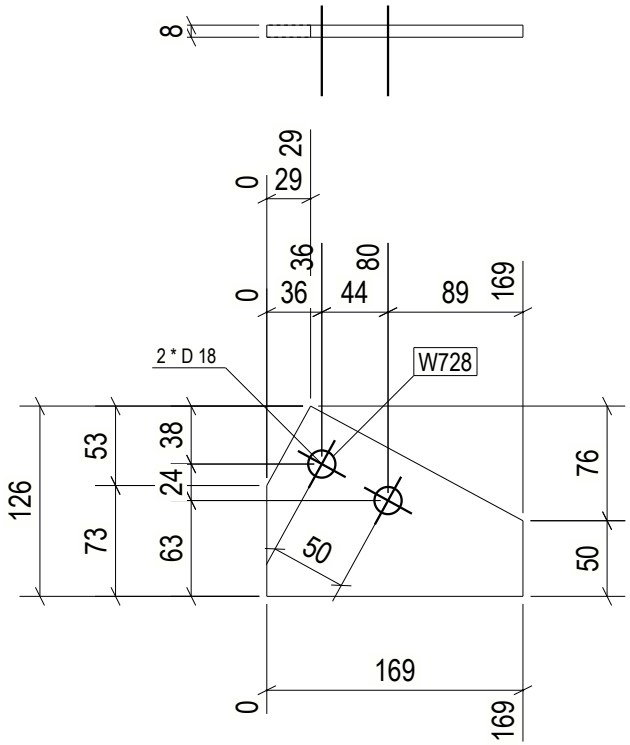

8 REQ'D AS DRAWN MK'D W728

6 October Monorail
Engineering Unit
Valid For Construction

GENERAL NOTES:

1. THE DIMENSIONS SHOWN ARE NOMINAL (IN MILLIMETERS), U.N.O.
2. WELD SIZESHALL BE AISC MINIMUM OF 6 mm UNLESS NOTED OTHERWISE.
3. ALL FIELD WELDS SHALL BE INSPECTED PER QUALITY ASSURANCE AND SPECIAL INSPECTIONS.

REFERENCE DRAWINGS

1	93M-BOA-NAT-LOT-04833
2	93M-BOA-NAT-LOT-09170
3	93M-BOA-NAT-LOT-01976
4	93M-BOA-NAT-LOT-20021
5	
6	
7	
8	
9	

6TH OF OCTOBER CITY RAIL TRANSIT MONORAIL

The Authority — Hill International Consultant — Main Contractor — Structural Designer

KEY PLAN:

SCALE: AS SHOWN | SHOPDRAWING | DATE: 12/09/2023

REV	DATE	DSG	CHK	APP	AMENDMENTS	STATUS
B	12/05/2023	M.KH	M.KH	DR.M.M	ISSUED FOR INFORMATION	IFI
A	11/20/2022	M.KH	M.KH	DR.M.M	ISSUED FOR INFORMATION	IFI

DRAWING TITLE

6TH OF OCTOBER MONORAIL
SERVICE WALKWAYS
ZONE (1008)
W728

Project Code	Rubric	Initiator	Lot	Ref	Number	Revision
9 3 M	0 4 7 6	A C C	6 0 D	E P	D W G	0 8 7 9 5	B

Tekla structures

approval is subject to approval of coordination package between multi-discipline

REVIEWED WITH COMMENT
MONORAILS PROJECT

All holes are 22mm U.N.O Length & Area & Weight per piece

Mark	Profile	Grade	QTY	Length	Area	Weight
W727	PL8*161.7	S355JR	1	282.9	0.06	1.7

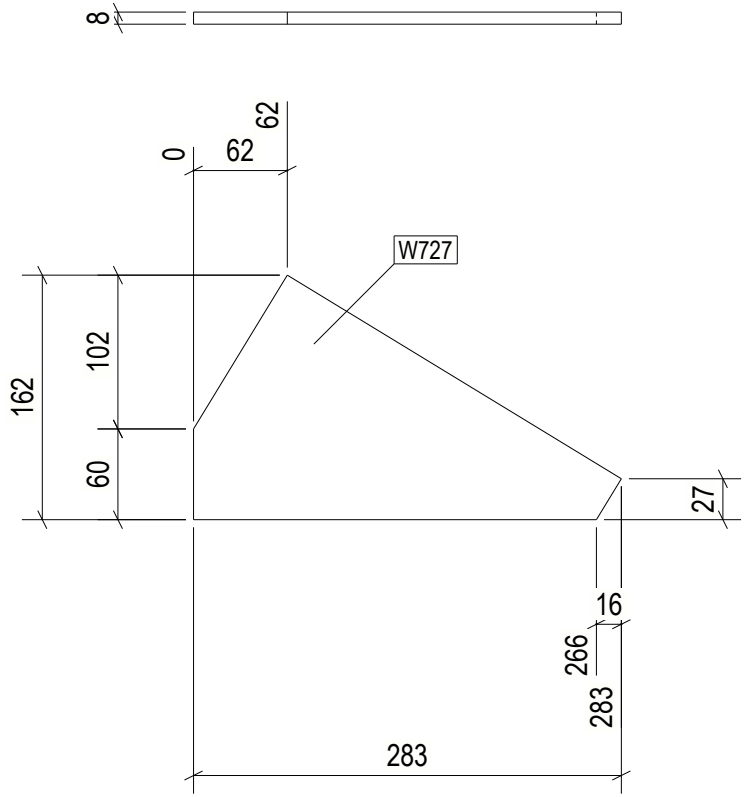

1 REQ'D AS DRAWN MK'D W727

6 October Monorail
Engineering Unit
Valid For Construction

GENERAL NOTES:

1. THE DIMENSIONS SHOWN ARE NOMINAL (IN MILLIMETERS), U.N.O.
2. WELD SIZESHALL BE AISC MINIMUM OF 6 mm UNLESS NOTED OTHERWISE.
3. ALL FIELD WELDS SHALL BE INSPECTED PER QUALITY ASSURANCE AND SPECIAL INSPECTIONS.

REFERENCE DRAWINGS

1	93M-BOA-NAT-LOT-04833
2	93M-BOA-NAT-LOT-09170
3	93M-BOA-NAT-LOT-01976
4	93M-BOA-NAT-LOT-20021
5	
6	
7	
8	
9	

6TH OF OCTOBER CITY RAIL TRANSIT MONORAIL

The Authority | Hill International Consultant | Main Contractor | Structural Designer

KEY PLAN:

SCALE: AS SHOWN | SHOPDRAWING | DATE: 12/09/2023

DRAWING TITLE
6TH OF OCTOBER MONORAIL
SERVICE WALKWAYS
ZONE (1008)
W727

REV.	DATE	DSG	CHK	APP	AMENDMENTS	STATUS
B	12/05/2023	M.KH	M.KH	DR.M.M	ISSUED FOR INFORMATION	IFI
A	11/20/2022	M.KH	M.KH	DR.M.M	ISSUED FOR INFORMATION	IFI

Project Code	Rubric	Initiator	Lot	Ref	Number	Revision
9 3 M	0 4 7 6	A C C	6 0 D E P	D W G	0 8 7 9 6	B

Tekla structures

approval is subject to approval of coordination package between multi-discipline

REVIEWED WITH COMMENT
MONORAILS PROJECT

All holes are 22mm U.N.O Length & Area & Weight per piece

Mark	Profile	Grade	QTY	Length	Area	Weight
W726	PL25*300	S355JR	12	300.0	0.21	17.7

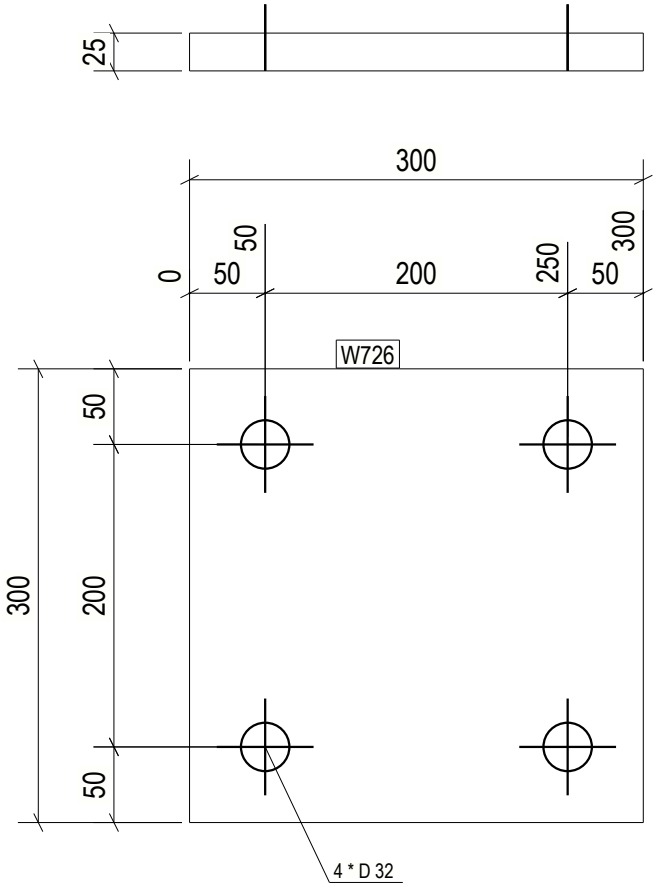

12 REQ'D AS DRAWN MK'D W726

6 October Monorail
Engineering Unit
Valid For Construction

GENERAL NOTES:

1. THE DIMENSIONS SHOWN ARE NOMINAL (IN MILLIMETERS), U.N.O.
2. WELD SIZESHALL BE AISC MINIMUM OF 6 mm UNLESS NOTED OTHERWISE.
3. ALL FIELD WELDS SHALL BE INSPECTED PER QUALITY ASSURANCE AND SPECIAL INSPECTIONS.

REFERENCE DRAWINGS

1	93M-BOA-NAT-LOT-04833
2	93M-BOA-NAT-LOT-09170
3	93M-BOA-NAT-LOT-01976
4	93M-BOA-NAT-LOT-20021
5	
6	
7	
8	
9	

6TH OF OCTOBER CITY RAIL TRANSIT MONORAIL

The Authority | Hill International Consultant | Main Contractor | Structural Designer

KEY PLAN:

REV.	DATE	DSG	CHK	APP	AMENDMENTS	STATUS
B	12/05/2023	M.KH	M.KH	DR.BIM	ISSUED FOR INFORMATION	IFI
A	11/20/2022	M.KH	M.KH	DR.BIM	ISSUED FOR INFORMATION	IFI

SCALE: AS SHOWN | SHOPDRAWING | DATE: 12/05/2023

DRAWING TITLE
6TH OF OCTOBER MONORAIL
SERVICE WALKWAYS
ZONE (1008)
W726

Project Code	Rubric	Initiator	Lot	Ref	Number	Revision
9 3 M 0 4 7 6	A C C 6 0	D E P	D W G	0 8 7 9 7		B

Tekla structures

approval is subject to approval of coordination package between multi-discipline

REVIEWED WITH COMMENT
MONORAILS PROJECT

All holes are 22mm U.N.O Length & Area & Weight per piece

Mark	Profile	Grade	QTY	Length	Area	Weight
W725	CHS48.3*4.0	S235JR	4	22.0	0.00	0.1

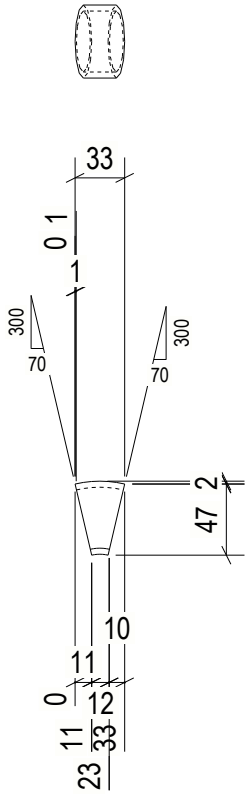

4 REQ'D AS DRAWN MK'D W725

6 October Monorail
Engineering Unit
Valid For Construction

GENERAL NOTES:

1. THE DIMENSIONS SHOWN ARE NOMINAL (IN MILLIMETERS), U.N.O.
2. WELD SIZESHALL BE AISC MINIMUM OF 6 mm UNLESS NOTED OTHERWISE.
3. ALL FIELD WELDS SHALL BE INSPECTED PER QUALITY ASSURANCE AND SPECIAL INSPECTIONS.

REFERENCE DRAWINGS

1	93M-BOA-NAT-LOT-04833
2	93M-BOA-NAT-LOT-09170
3	93M-BOA-NAT-LOT-01976
4	93M-BOA-NAT-LOT-20021
5	
6	
7	
8	
9	

6TH OF OCTOBER CITY RAIL TRANSIT MONORAIL

The Authority | Hill International Consultant | Main Contractor | Structural Designer

KEY PLAN:

REV	DATE	DSG	CHK	APP	AMENDMENTS	STATUS
B	12/05/2023	M.KH	M.KH	DR.M.M	ISSUED FOR INFORMATION	IFI
A	11/20/2022	M.KH	M.KH	DR.M.M	ISSUED FOR INFORMATION	IFI

SCALE: AS SHOWN | SHOPDRAWING | DATE: 12/05/2023

DRAWING TITLE
6TH OF OCTOBER MONORAIL
SERVICE WALKWAYS
ZONE (1008)
W725

Project Code	Rubric	Initiator	Lot	Ref	Number	Revision
9 3 M	0 4 7 6	A C C	6 0 D	E P	D W G	0 8 7 9 8	B

Tekla structures

approval is subject to approval of coordination package between multi-discipline

REVIEWED WITH COMMENT
MONORAILS PROJECT

All holes are 22mm U.N.O Length & Area & Weight per piece

Mark	Profile	Grade	QTY	Length	Area	Weight
W724	CHS48.3*4.0	S235JR	1	44.5	0.01	0.2

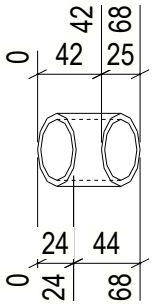

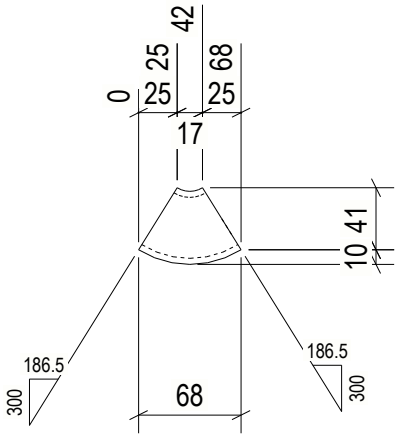

1 REQ'D AS DRAWN MK'D W724

6 October Monorail
Engineering Unit
Valid For Construction

GENERAL NOTES:

1. THE DIMENSIONS SHOWN ARE NOMINAL (IN MILLIMETERS), U.N.O.
2. WELD SIZESHALL BE AISC MINIMUM OF 6 mm UNLESS NOTED OTHERWISE.
3. ALL FIELD WELDS SHALL BE INSPECTED PER QUALITY ASSURANCE AND SPECIAL INSPECTIONS.

REFERENCE DRAWINGS

1	93M-BOA-NAT-LOT-04833
2	93M-BOA-NAT-LOT-09170
3	93M-BOA-NAT-LOT-01976
4	93M-BOA-NAT-LOT-20021
5	
6	
7	
8	
9	

6TH OF OCTOBER CITY RAIL TRANSIT MONORAIL

The Authority | Hill International Consultant | Main Contractor | Structural Designer

KEY PLAN:

SCALE: AS SHOWN | SHOPDRAWING | DATE: 12/09/2023

REV.	DATE	DSG	CHK	APP	AMENDMENTS	STATUS
B	12/05/2023	M.KH	M.KH	DR.M.M	ISSUED FOR INFORMATION	IFI
A	11/20/2022	M.KH	M.KH	DR.M.M	ISSUED FOR INFORMATION	IFI

DRAWING TITLE
6TH OF OCTOBER MONORAIL
SERVICE WALKWAYS
ZONE (1008)
W724

Project Code	Rubric	Initiator	Lot	Ref	Number	Revision
9 3 M	0 4 7 6	A C C	6 0 D	E P	D W G	0 8 7 9 9	B

Tekla structures

approval is subject to approval of coordination package between multi-discipline

REVIEWED WITH COMMENT MONORAILS PROJECT

All holes are 22mm U.N.O Length & Area & Weight per piece						
W723	L70*7	S235JR	1	64.0	0.02	0.5
Mark	Profile	Grade	QTY	Length	Area	Weight

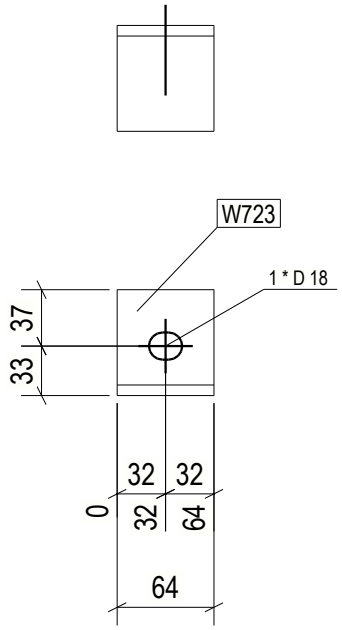

1 REQ'D AS DRAWN MK'D W723

6 October Monorail Engineering Unit
Valid For Construction

GENERAL NOTES:

1. THE DIMENSIONS SHOWN ARE NOMINAL (IN MILLIMETERS), U.N.O.
2. WELD SIZESHALL BE AISC MINIMUM OF 6 mm UNLESS NOTED OTHERWISE.
3. ALL FIELD WELDS SHALL BE INSPECTED PER QUALITY ASSURANCE AND SPECIAL INSPECTIONS.

REFERENCE DRAWINGS

1	93M-BOA-NAT-LOT-04833
2	93M-BOA-NAT-LOT-09170
3	93M-BOA-NAT-LOT-01976
4	93M-BOA-NAT-LOT-20021
5	
6	
7	
8	
9	

6TH OF OCTOBER CITY RAIL TRANSIT MONORAIL

The Authority | Hill International Consultant | Main Contractor | Structural Designer

KEY PLAN:

SCALE	SHOPDRAWING	DATE
AS SHOWN		12/05/2023

REV	DATE	DSG	CHK	APP	AMENDMENTS	STATUS
B	12/05/2023	M.KH	M.KH	DR.M.M	ISSUED FOR INFORMATION	IFI
A	11/20/2022	M.KH	M.KH	DR.M.M	ISSUED FOR INFORMATION	IFI

DRAWING TITLE

6TH OF OCTOBER MONORAIL SERVICE WALKWAYS ZONE (1008)
W723

Project Code	Rubric	Initiator	Lot	Ref	Number	Revision
93M	0476	ACC	60DEP	DWG	08800	B

Tekla structures

approval is subject to approval of coordination package between multi-discipline

REVIEWED WITH COMMENT MONORAILS PROJECT

All holes are 22mm U.N.O Length & Area & Weight per piece						
W722	L70*7	S235JR	1	64.0	0.02	0.5
Mark	Profile	Grade	QTY	Length	Area	Weight

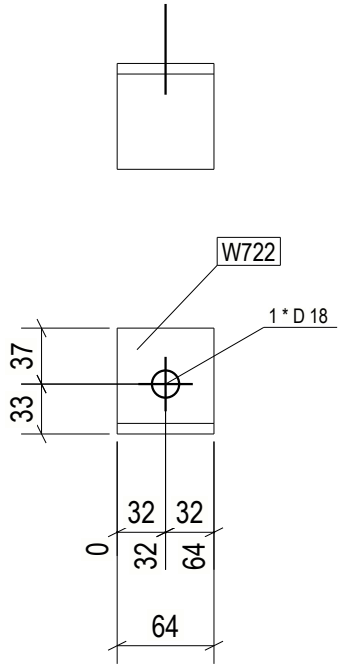

1 REQ'D AS DRAWN MK'D W722

6 October Monorail Engineering Unit
Valid For Construction

GENERAL NOTES:

1. THE DIMENSIONS SHOWN ARE NOMINAL (IN MILLIMETERS), U.N.O.
2. WELD SIZESHALL BE AISC MINIMUM OF 6 mm UNLESS NOTED OTHERWISE.
3. ALL FIELD WELDS SHALL BE INSPECTED PER QUALITY ASSURANCE AND SPECIAL INSPECTIONS.

REFERENCE DRAWINGS

1	93M-BOA-NAT-LOT-04833
2	93M-BOA-NAT-LOT-09170
3	93M-BOA-NAT-LOT-01976
4	93M-BOA-NAT-LOT-20021
5	
6	
7	
8	
9	

6TH OF OCTOBER CITY RAIL TRANSIT MONORAIL

The Authority | Hill International Consultant | Main Contractor | Structural Designer

KEY PLAN:

SCALE	SHOPDRAWING	DATE
AS SHOWN		12/05/2023

REV	DATE	DSG	CHK	APP	AMENDMENTS	STATUS
B	12/05/2023	M.KH	M.KH	DR.M.M	ISSUED FOR INFORMATION	IFI
A	11/20/2022	M.KH	M.KH	DR.M.M	ISSUED FOR INFORMATION	IFI

DRAWING TITLE

6TH OF OCTOBER MONORAIL SERVICE WALKWAYS ZONE (1008) W722

Project Code	Rubric	Initiator	Lot	Ref	Number	Revision
93M	0476	ACC	60DEP	DWG	0801	B

Tekla structures

approval is subject to approval of coordination package between multi-discipline

REVIEWED WITH COMMENT
MONORAILS PROJECT

All holes are 22mm U.N.O Length & Area & Weight per piece

Mark	Profile	Grade	QTY	Length	Area	Weight
W721	PL10*72.9	S355JR	2	84.5	0.01	0.3

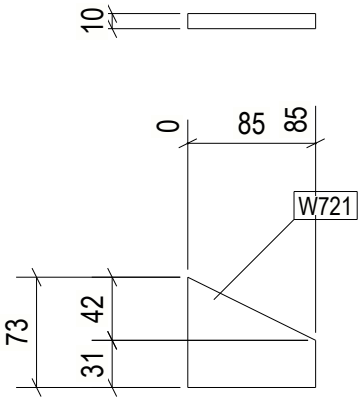

2 REQ'D AS DRAWN MK'D W721

6 October Monorail
Engineering Unit
Valid For Construction

GENERAL NOTES:

1. THE DIMENSIONS SHOWN ARE NOMINAL (IN MILLIMETERS), U.N.O.
2. WELD SIZESHALL BE AISC MINIMUM OF 6 mm UNLESS NOTED OTHERWISE.
3. ALL FIELD WELDS SHALL BE INSPECTED PER QUALITY ASSURANCE AND SPECIAL INSPECTIONS.

REFERENCE DRAWINGS

1	93M-BOA-NAT-LOT-04833
2	93M-BOA-NAT-LOT-09170
3	93M-BOA-NAT-LOT-01976
4	93M-BOA-NAT-LOT-20021
5	
6	
7	
8	
9	

6TH OF OCTOBER CITY RAIL TRANSIT MONORAIL

The Authority | Hill International Consultant | Main Contractor | Structural Designer

KEY PLAN:

REV.	DATE	DSG	CHK	APP	AMENDMENTS	STATUS
B	12/05/2023	M.KH	M.KH	DR.M.M	ISSUED FOR INFORMATION	IFI
A	11/20/2022	M.KH	M.KH	DR.M.M	ISSUED FOR INFORMATION	IFI

SCALE: AS SHOWN | SHOPDRAWING | DATE: 12/05/2023

DRAWING TITLE
6TH OF OCTOBER MONORAIL
SERVICE WALKWAYS
ZONE (1008)
W721

Project Code	Rubric	Initiator	Lot	Ref	Number	Revision
9 3 M	0 4 7 6	A C C	6 0 D	E P	D W G	0 8 8 0 2	B

Tekla structures

approval is subject to approval of coordination package between multi-discipline

REVIEWED WITH COMMENT
MONORAILS PROJECT

All holes are 22mm U.N.O Length & Area & Weight per piece

Mark	Profile	Grade	QTY	Length	Area	Weight
W720	PL10*73.2	S355JR	2	86.0	0.01	0.4

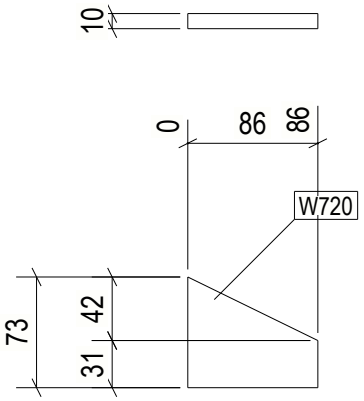

2 REQ'D AS DRAWN MK'D W720

6 October Monorail
Engineering Unit
Valid For Construction

GENERAL NOTES:

1. THE DIMENSIONS SHOWN ARE NOMINAL (IN MILLIMETERS), U.N.O.
2. WELD SIZESHALL BE AISC MINIMUM OF 6 mm UNLESS NOTED OTHERWISE.
3. ALL FIELD WELDS SHALL BE INSPECTED PER QUALITY ASSURANCE AND SPECIAL INSPECTIONS.

REFERENCE DRAWINGS

1	93M-BOA-NAT-LOT-04833
2	93M-BOA-NAT-LOT-09170
3	93M-BOA-NAT-LOT-01976
4	93M-BOA-NAT-LOT-20021
5	
6	
7	
8	
9	

6TH OF OCTOBER CITY RAIL TRANSIT MONORAIL

The Authority | Hill International Consultant | Main Contractor | Structural Designer

KEY PLAN:

REV.	DATE	DSG	CHK	APP	AMENDMENTS	STATUS
B	12/05/2023	M.KH	M.KH	DR.M.M	ISSUED FOR INFORMATION	IFI
A	11/20/2022	M.KH	M.KH	DR.M.M	ISSUED FOR INFORMATION	IFI

SCALE AS SHOWN | SHOPDRAWING | DATE 12/05/2023

DRAWING TITLE
6TH OF OCTOBER MONORAIL
SERVICE WALKWAYS
ZONE (1008)
W720

Project Code	Rubric	Initiator	Lot	Ref	Number	Revision
9 3 M	0 4 7 6	A C C	6 0 D	E P	D W G	0 8 8 0 3	B

Tekla structures

approval is subject to approval of coordination package between multi-discipline

REVIEWED WITH COMMENT
MONORAILS PROJECT

All holes are 22mm U.N.O Length & Area & Weight per piece

Mark	Profile	Grade	QTY	Length	Area	Weight
W719	CHS48.3*4.0	S235JR	1	97.6	0.01	0.4

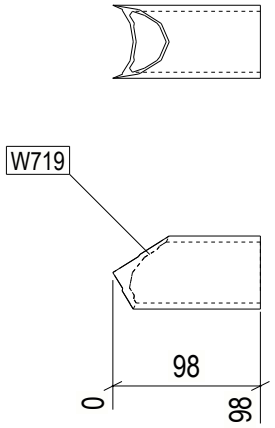

1 REQ'D AS DRAWN MK'D W719

6 October Monorail
Engineering Unit
Valid For Construction

GENERAL NOTES:

1. THE DIMENSIONS SHOWN ARE NOMINAL (IN MILLIMETERS), U.N.O.
2. WELD SIZESHALL BE AISC MINIMUM OF 6 mm UNLESS NOTED OTHERWISE.
3. ALL FIELD WELDS SHALL BE INSPECTED PER QUALITY ASSURANCE AND SPECIAL INSPECTIONS.

REFERENCE DRAWINGS

1	93M-BOA-NAT-LOT-04833
2	93M-BOA-NAT-LOT-09170
3	93M-BOA-NAT-LOT-01976
4	93M-BOA-NAT-LOT-20021
5	
6	
7	
8	
9	

6TH OF OCTOBER CITY RAIL TRANSIT MONORAIL

The Authority | Hill International Consultant | Main Contractor | Structural Designer

KEY PLAN:

REV.	DATE	DSG	CHK	APP	AMENDMENTS	STATUS
B	12/05/2023	M.KH	M.KH	DR.M.M	ISSUED FOR INFORMATION	IFI
A	11/20/2022	M.KH	M.KH	DR.M.M	ISSUED FOR INFORMATION	IFI

SCALE: AS SHOWN | SHOPDRAWING | DATE: 12/05/2023

DRAWING TITLE
6TH OF OCTOBER MONORAIL
SERVICE WALKWAYS
ZONE (1008)
W719

Project Code	Rubric	Initiator	Lot	Ref	Number	Revision
9 3 M	0 4 7 6	A C C	6 0 D E P	D W G	0 8 8 0 4	B

Tekla structures

approval is subject to approval of coordination package between multi-discipline

REVIEWED WITH COMMENT MONORAILS PROJECT

All holes are 22mm U.N.O Length & Area & Weight per piece						
W718	PL8*100	S355JR	1	165.0	0.04	1.0
Mark	Profile	Grade	QTY	Length	Area	Weight

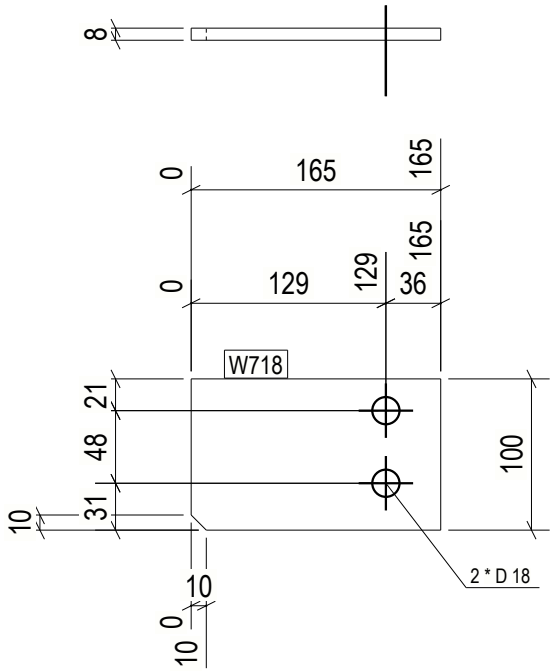

1 REQ'D AS DRAWN MK'D W718

6 October Monorail Engineering Unit
Valid For Construction

GENERAL NOTES:

1. THE DIMENSIONS SHOWN ARE NOMINAL (IN MILLIMETERS), U.N.O.
2. WELD SIZESHALL BE AISC MINIMUM OF 6 mm UNLESS NOTED OTHERWISE.
3. ALL FIELD WELDS SHALL BE INSPECTED PER QUALITY ASSURANCE AND SPECIAL INSPECTIONS.

REFERENCE DRAWINGS

1	93M-BOA-NAT-LOT-04833
2	93M-BOA-NAT-LOT-09170
3	93M-BOA-NAT-LOT-01976
4	93M-BOA-NAT-LOT-20021
5	
6	
7	
8	
9	

6TH OF OCTOBER CITY RAIL TRANSIT MONORAIL

The Authority | Hill International Consultant | ORASCOM BOMBARDIER Main Contractor | INNOVA Structural Designer

KEY PLAN:

SCALE	SHOPDRAWING	DATE
AS SHOWN		12/05/2023

REV	DATE	DSG	CHK	APP	AMENDMENTS	STATUS
B	12/05/2023	M.KH	M.KH	DR.M.M	ISSUED FOR INFORMATION	IFI
A	11/20/2022	M.KH	M.KH	DR.M.M	ISSUED FOR INFORMATION	IFI

DRAWING TITLE

6TH OF OCTOBER MONORAIL SERVICE WALKWAYS ZONE (1008) W718

Project Code	Rubric	Initiator	Lot	Ref	Number	Revision
93M	0476	ACC	60DEP	DWG	0805	B

Tekla structures

approval is subject to approval of coordination package between multi-discipline

REVIEWED WITH COMMENT MONORAILS PROJECT

All holes are 22mm U.N.O Length & Area & Weight per piece						
W717	L100*10	S235JR	1	840.0	0.34	12.5
Mark	Profile	Grade	QTY	Length	Area	Weight

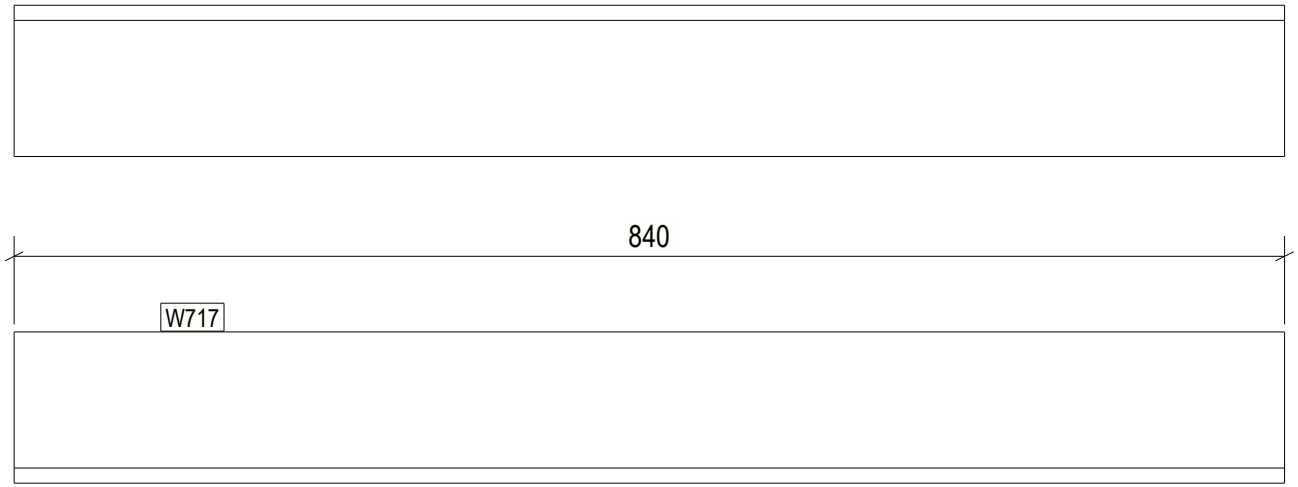

1 REQ'D AS DRAWN MK'D W717

6 October Monorail Engineering Unit
Valid For Construction

GENERAL NOTES:

1. THE DIMENSIONS SHOWN ARE NOMINAL (IN MILLIMETERS), U.N.O.
2. WELD SIZESHALL BE AISC MINIMUM OF 6 mm UNLESS NOTED OTHERWISE.
3. ALL FIELD WELDS SHALL BE INSPECTED PER QUALITY ASSURANCE AND SPECIAL INSPECTIONS.

REFERENCE DRAWINGS

1	93M-BOA-NAT-LOT-04833
2	93M-BOA-NAT-LOT-09170
3	93M-BOA-NAT-LOT-01976
4	93M-BOA-NAT-LOT-20021
5	
6	
7	
8	
9	

6TH OF OCTOBER CITY RAIL TRANSIT MONORAIL

The Authority — Hill International Consultant — Main Contractor — Structural Designer

KEY PLAN:

SCALE	SHOPDRAWING	DATE
AS SHOWN		12/05/2023

REV	DATE	DSG	CHK	APP	AMENDMENTS	STATUS
B	12/05/2023	M.KH	M.KH	DR.M.M	ISSUED FOR INFORMATION	IFI
A	11/20/2022	M.KH	M.KH	DR.M.M	ISSUED FOR INFORMATION	IFI

DRAWING TITLE

6TH OF OCTOBER MONORAIL SERVICE WALKWAYS ZONE (1008)
W717

Project Code	Rubric	Initiator	Lot	Ref	Number	Revision
93M	0476	ACC	60DEP	DWG	08806	B

Tekla structures

approval is subject to approval of coordination package between multi-discipline

REVIEWED WITH COMMENT MONORAILS PROJECT

All holes are 22mm U.N.O Length & Area & Weight per piece						
W716	PL10*25	S355JR	3	73.5	0.01	0.1
Mark	Profile	Grade	QTY	Length	Area	Weight

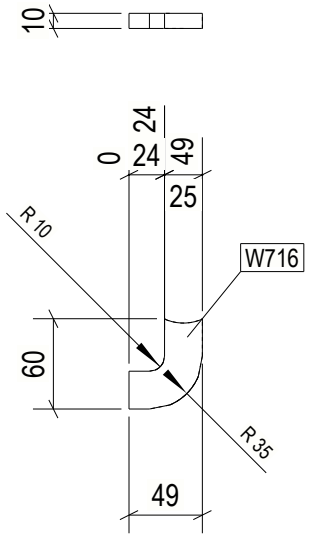

3 REQ'D AS DRAWN MK'D W716

6 October Monorail Engineering Unit Valid For Construction

GENERAL NOTES:

1. THE DIMENSIONS SHOWN ARE NOMINAL (IN MILLIMETERS), U.N.O.
2. WELD SIZESHALL BE AISC MINIMUM OF 6 mm UNLESS NOTED OTHERWISE.
3. ALL FIELD WELDS SHALL BE INSPECTED PER QUALITY ASSURANCE AND SPECIAL INSPECTIONS.

REFERENCE DRAWINGS

1	93M-BOA-NAT-LOT-04833
2	93M-BOA-NAT-LOT-09170
3	93M-BOA-NAT-LOT-01976
4	93M-BOA-NAT-LOT-20021
5	
6	
7	
8	
9	

6TH OF OCTOBER CITY RAIL TRANSIT MONORAIL

The Authority — Hill International Consultant — Main Contractor — Structural Designer

KEY PLAN:

SCALE	SHOPDRAWING	DATE
AS SHOWN		12/05/2023

REV	DATE	DSG	CHK	APP	AMENDMENTS	STATUS
B	12/05/2023	M.KH	M.KH	DR.M.M	ISSUED FOR INFORMATION	IFI
A	11/20/2022	M.KH	M.KH	DR.M.M	ISSUED FOR INFORMATION	IFI

DRAWING TITLE

6TH OF OCTOBER MONORAIL SERVICE WALKWAYS ZONE (1008) W716

Project Code	Rubric	Initiator	Lot	Ref	Number	Revision
93M	0476	ACC	60DEP	DWG	08807	B

Tekla structures

approval is subject to approval of coordination package between multi-discipline

REVIEWED WITH COMMENT
MONORAILS PROJECT

All holes are 22mm U.N.O Length & Area & Weight per piece

Mark	Profile	Grade	QTY	Length	Area	Weight
W715	CHS48.3*4.0	S235JR	1	35.4	0.01	0.2

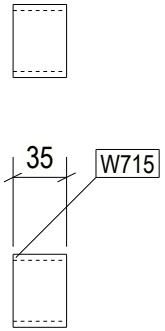

1 REQ'D AS DRAWN MK'D W715

6 October Monorail
Engineering Unit
Valid For Construction

GENERAL NOTES:

1. THE DIMENSIONS SHOWN ARE NOMINAL (IN MILLIMETERS), U.N.O.
2. WELD SIZESHALL BE AISC MINIMUM OF 6 mm UNLESS NOTED OTHERWISE.
3. ALL FIELD WELDS SHALL BE INSPECTED PER QUALITY ASSURANCE AND SPECIAL INSPECTIONS.

REFERENCE DRAWINGS

1	93M-BOA-NAT-LOT-04833
2	93M-BOA-NAT-LOT-09170
3	93M-BOA-NAT-LOT-01976
4	93M-BOA-NAT-LOT-20021
5	
6	
7	
8	
9	

6TH OF OCTOBER CITY RAIL TRANSIT MONORAIL

The Authority | Hill International Consultant | Main Contractor | Structural Designer

KEY PLAN:

REV.	DATE	DSG	CHK	APP	AMENDMENTS	STATUS
B	12/05/2023	M.KH	M.KH	DR.M.M	ISSUED FOR INFORMATION	IFI
A	11/20/2022	M.KH	M.KH	DR.M.M	ISSUED FOR INFORMATION	IFI

SCALE: AS SHOWN | SHOPDRAWING | DATE: 12/05/2023

DRAWING TITLE
6TH OF OCTOBER MONORAIL
SERVICE WALKWAYS
ZONE (1008)
W715

Project Code	Rubric	Initiator	Lot	Ref	Number	Revision
9 3 M	0 4 7 6	A C C	6 0 D	E P	D W G	0 8 8 0 8	B

Tekla structures

approval is subject to approval of coordination package between multi-discipline

REVIEWED WITH COMMENT
MONORAILS PROJECT

All holes are 22mm U.N.O Length & Area & Weight per piece

Mark	Profile	Grade	QTY	Length	Area	Weight
W714	CHS48.3*4.0	S235JR	1	69.9	0.01	0.3

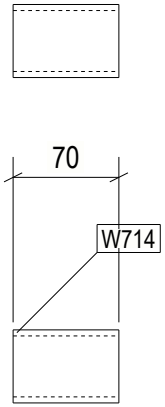

1 REQ'D AS DRAWN MK'D W714

6 October Monorail
Engineering Unit
Valid For Construction

GENERAL NOTES:

1. THE DIMENSIONS SHOWN ARE NOMINAL (IN MILLIMETERS), U.N.O.
2. WELD SIZESHALL BE AISC MINIMUM OF 6 mm UNLESS NOTED OTHERWISE.
3. ALL FIELD WELDS SHALL BE INSPECTED PER QUALITY ASSURANCE AND SPECIAL INSPECTIONS.

REFERENCE DRAWINGS

1	93M-BOA-NAT-LOT-04833
2	93M-BOA-NAT-LOT-09170
3	93M-BOA-NAT-LOT-01976
4	93M-BOA-NAT-LOT-20021
5	
6	
7	
8	
9	

6TH OF OCTOBER CITY RAIL TRANSIT MONORAIL

The Authority — Hill International Consultant — Main Contractor — Structural Designer

KEY PLAN:

REV.	DATE	DSG	CHK	APP	AMENDMENTS	STATUS
B	12/05/2023	M.KH	M.KH	DR.M.M	ISSUED FOR INFORMATION	IFI
A	11/20/2022	M.KH	M.KH	DR.M.M	ISSUED FOR INFORMATION	IFI

SCALE: AS SHOWN | SHOPDRAWING | DATE: 12/05/2023

DRAWING TITLE
6TH OF OCTOBER MONORAIL
SERVICE WALKWAYS
ZONE (1008)
W714

Project Code	Rubric	Initiator	Lot	Ref	Number	Revision
93M	047	ACC	60DEP	DWG	0880	B

Tekla structures

approval is subject to approval of coordination package between multi-discipline

REVIEWED WITH COMMENT MONORAILS PROJECT

All holes are 22mm U.N.O Length & Area & Weight per piece						
W713	CHS48.3*4.0	S235JR	1	106.0	0.02	0.5
Mark	Profile	Grade	QTY	Length	Area	Weight

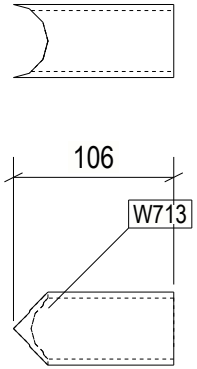

1 REQ'D AS DRAWN MK'D W713

6 October Monorail Engineering Unit
Valid For Construction

GENERAL NOTES:

1. THE DIMENSIONS SHOWN ARE NOMINAL (IN MILLIMETERS), U.N.O.
2. WELD SIZESHALL BE AISC MINIMUM OF 6 mm UNLESS NOTED OTHERWISE.
3. ALL FIELD WELDS SHALL BE INSPECTED PER QUALITY ASSURANCE AND SPECIAL INSPECTIONS.

REFERENCE DRAWINGS

1	93M-BOA-NAT-LOT-04833
2	93M-BOA-NAT-LOT-09170
3	93M-BOA-NAT-LOT-01976
4	93M-BOA-NAT-LOT-20021
5	
6	
7	
8	
9	

6TH OF OCTOBER CITY RAIL TRANSIT MONORAIL

The Authority | Hill International Consultant | ORASCOM BOMBARDIER Main Contractor | INNOVA Structural Designer

KEY PLAN:

SCALE	SHOPDRAWING	DATE
AS SHOWN		12/05/2023

REV	DATE	DSG	CHK	APP	AMENDMENTS	STATUS
B	12/05/2023	M.KH	M.KH	DR.M.M	ISSUED FOR INFORMATION	IFI
A	11/20/2022	M.KH	M.KH	DR.M.M	ISSUED FOR INFORMATION	IFI

DRAWING TITLE

6TH OF OCTOBER MONORAIL SERVICE WALKWAYS ZONE (1008) W713

Project Code	Rubric	Initiator	Lot	Ref	Number	Revision
93M	0476	ACC	60DEP	DWG	0810	B

Tekla structures

approval is subject to approval of coordination package between multi-discipline

REVIEWED WITH COMMENT
MONORAILS PROJECT

All holes are 22mm U.N.O Length & Area & Weight per piece

Mark	Profile	Grade	QTY	Length	Area	Weight
W712	CHS48.3*4.0	S235JR	1	1186.5	0.18	5.2

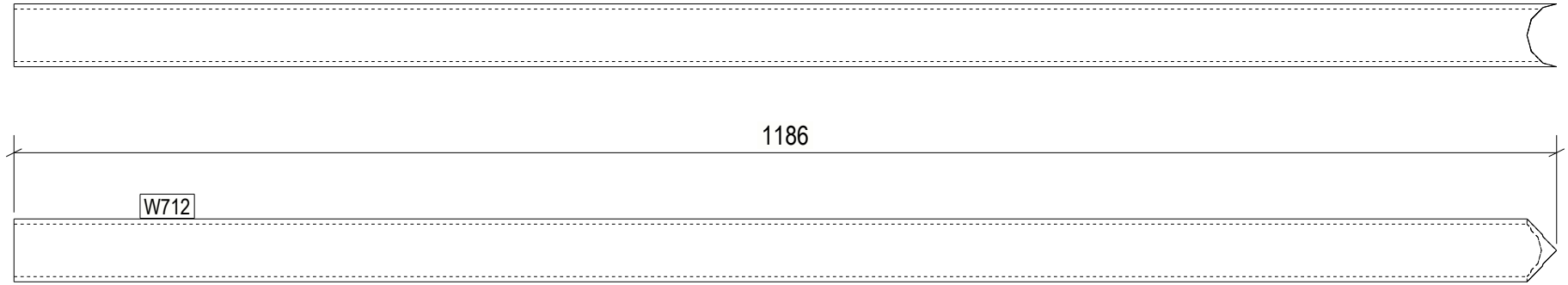

1 REQ'D AS DRAWN MK'D W712

6 October Monorail
Engineering Unit
Valid For Construction

GENERAL NOTES:

1. THE DIMENSIONS SHOWN ARE NOMINAL (IN MILLIMETERS), U.N.O.
2. WELD SIZESHALL BE AISC MINIMUM OF 6 mm UNLESS NOTED OTHERWISE.
3. ALL FIELD WELDS SHALL BE INSPECTED PER QUALITY ASSURANCE AND SPECIAL INSPECTIONS.

REFERENCE DRAWINGS

1	93M-BOA-NAT-LOT-04833
2	93M-BOA-NAT-LOT-09170
3	93M-BOA-NAT-LOT-01976
4	93M-BOA-NAT-LOT-20021
5	
6	
7	
8	
9	

6TH OF OCTOBER CITY RAIL TRANSIT MONORAIL

The Authority — Hill International Consultant — Main Contractor — Structural Designer

KEY PLAN:

REV.	DATE	DSG	CHK	APP	AMENDMENTS	STATUS
B	12/05/2023	M.KH	M.KH	DR.BM	ISSUED FOR INFORMATION	IFI
A	11/20/2022	M.KH	M.KH	DR.BM	ISSUED FOR INFORMATION	IFI

SCALE: AS SHOWN | SHOPDRAWING | DATE: 12/05/2023

DRAWING TITLE
6TH OF OCTOBER MONORAIL
SERVICE WALKWAYS
ZONE (1008)
W712

Project Code	Rubric	Initiator	Lot	Ref	Number	Revision
9 3 M	0 4 7 6	A C C	6 0 D	E P	D W G	0 8 8 1 1	B

Tekla structures

approval is subject to approval of coordination package between multi-discipline

REVIEWED WITH COMMENT
MONORAILS PROJECT

All holes are 22mm U.N.O Length & Area & Weight per piece

Mark	Profile	Grade	QTY	Length	Area	Weight
W711	CHS48.3*4.0	S235JR	1	108.1	0.02	0.5

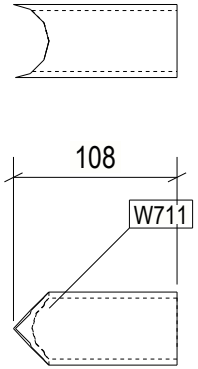

1 REQ'D AS DRAWN MK'D W711

6 October Monorail
Engineering Unit
Valid For Construction

GENERAL NOTES:

1. THE DIMENSIONS SHOWN ARE NOMINAL (IN MILLIMETERS), U.N.O.
2. WELD SIZESHALL BE AISC MINIMUM OF 6 mm UNLESS NOTED OTHERWISE.
3. ALL FIELD WELDS SHALL BE INSPECTED PER QUALITY ASSURANCE AND SPECIAL INSPECTIONS.

REFERENCE DRAWINGS

1	93M-BOA-NAT-LOT-04833
2	93M-BOA-NAT-LOT-09170
3	93M-BOA-NAT-LOT-01976
4	93M-BOA-NAT-LOT-20021
5	
6	
7	
8	
9	

6TH OF OCTOBER CITY RAIL TRANSIT MONORAIL

The Authority | Hill International Consultant | Main Contractor | Structural Designer

KEY PLAN:

REV.	DATE	DSG	CHK	APP	AMENDMENTS	STATUS
B	12/05/2023	M.KH	M.KH	DR.M.M	ISSUED FOR INFORMATION	IFI
A	11/20/2022	M.KH	M.KH	DR.M.M	ISSUED FOR INFORMATION	IFI

SCALE: AS SHOWN | SHOPDRAWING | DATE: 12/05/2023

DRAWING TITLE
6TH OF OCTOBER MONORAIL
SERVICE WALKWAYS
ZONE (1008)
W711

Project Code	Rubric	Initiator	Lot	Ref	Number	Revision
9 3 M	0 4 7 6	A C C	6 0 D	E P	D W G	0 8 8 1 2	B

Tekla structures

approval is subject to approval of coordination package between multi-discipline

REVIEWED WITH COMMENT
MONORAILS PROJECT

All holes are 22mm U.N.O Length & Area & Weight per piece

Mark	Profile	Grade	QTY	Length	Area	Weight
W710	CHS48.3*4.0	S235JR	2	1187.2	0.18	5.2

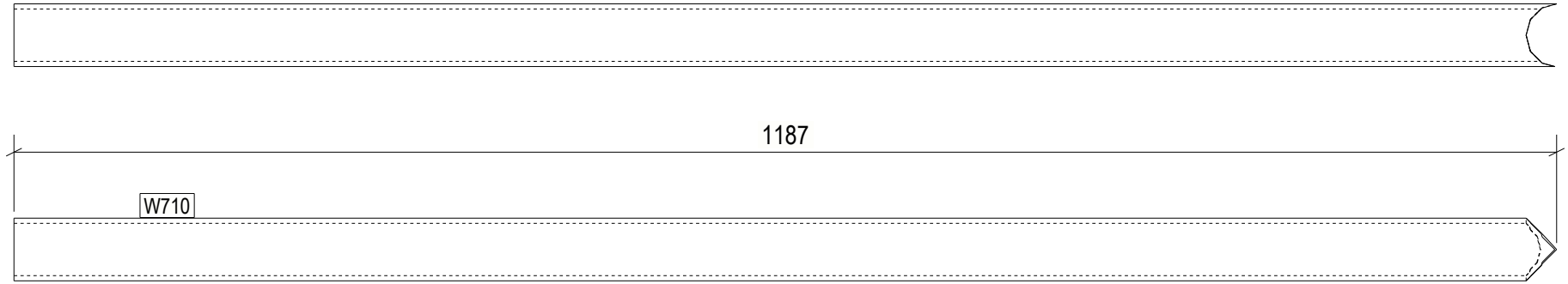

2 REQ'D AS DRAWN MK'D W710

6 October Monorail
Engineering Unit
Valid For Construction

GENERAL NOTES:

1. THE DIMENSIONS SHOWN ARE NOMINAL (IN MILLIMETERS), U.N.O.
2. WELD SIZESHALL BE AISC MINIMUM OF 6 mm UNLESS NOTED OTHERWISE.
3. ALL FIELD WELDS SHALL BE INSPECTED PER QUALITY ASSURANCE AND SPECIAL INSPECTIONS.

REFERENCE DRAWINGS

1	93M-BOA-NAT-LOT-04833
2	93M-BOA-NAT-LOT-09170
3	93M-BOA-NAT-LOT-01976
4	93M-BOA-NAT-LOT-20021
5	
6	
7	
8	
9	

6TH OF OCTOBER CITY RAIL TRANSIT MONORAIL

The Authority — Hill International Consultant — Main Contractor — Structural Designer

KEY PLAN:

SCALE	SHOPDRAWING	DATE
AS SHOWN		12/09/2023

REV	DATE	DSG	CHK	APP	AMENDMENTS	STATUS
B	12/05/2023	M.KH	M.KH	DR.M.M	ISSUED FOR INFORMATION	IFI
A	11/20/2022	M.KH	M.KH	DR.M.M	ISSUED FOR INFORMATION	IFI

DRAWING TITLE

6TH OF OCTOBER MONORAIL
SERVICE WALKWAYS
ZONE (1008)
W710

Project Code	Rubric	Initiator	Lot	Ref	Number	Revision
93M	047	ACC	60	DEP	DWG	0881	B

Tekla structures

approval is subject to approval of coordination package between multi-discipline

REVIEWED WITH COMMENT
MONORAILS PROJECT

All holes are 22mm U.N.O Length & Area & Weight per piece

Mark	Profile	Grade	QTY	Length	Area	Weight
W709	CHS48.3*4.0	S235JR	1	450.7	0.07	2.0

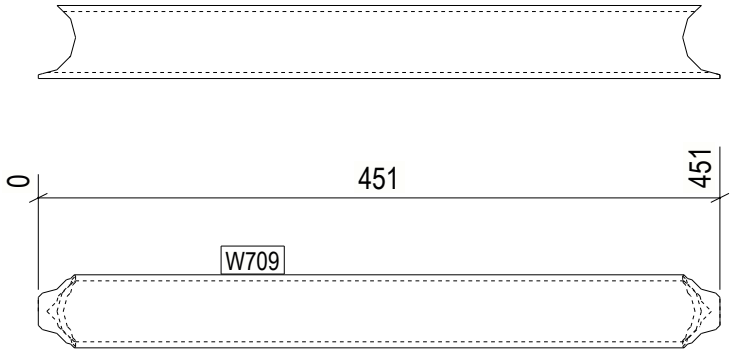

1 REQ'D AS DRAWN MK'D W709

6 October Monorail
Engineering Unit
Valid For Construction

Tekla structures

GENERAL NOTES:

1. THE DIMENSIONS SHOWN ARE NOMINAL (IN MILLIMETERS), U.N.O.
2. WELD SIZESHALL BE AISC MINIMUM OF 6 mm UNLESS NOTED OTHERWISE.
3. ALL FIELD WELDS SHALL BE INSPECTED PER QUALITY ASSURANCE AND SPECIAL INSPECTIONS.

REFERENCE DRAWINGS

1	93M-BOA-NAT-LOT-04833
2	93M-BOA-NAT-LOT-09170
3	93M-BOA-NAT-LOT-01976
4	93M-BOA-NAT-LOT-20021
5	
6	
7	
8	
9	

6TH OF OCTOBER CITY RAIL TRANSIT MONORAIL

The Authority | Hill International Consultant | Main Contractor | Structural Designer

KEY PLAN:

REV.	DATE	DSG	CHK	APP	AMENDMENTS	STATUS
B	12/05/2023	M.KH	M.KH	DR.M.M	ISSUED FOR INFORMATION	IFI
A	11/20/2022	M.KH	M.KH	DR.M.M	ISSUED FOR INFORMATION	IFI

SCALE AS SHOWN | SHOPDRAWING | DATE 12/05/2023

DRAWING TITLE
6TH OF OCTOBER MONORAIL
SERVICE WALKWAYS
ZONE (1008)
W709

Project Code	Rubric	Initiator	Lot	Ref	Number	Revision
9 3 M	0 4 7 6	A C C	6 0 D	E P	D W G	0 8 8 1 4	B

approval is subject to approval of coordination package between multi-discipline

REVIEWED WITH COMMENT
MONORAILS PROJECT

All holes are 22mm U.N.O Length & Area & Weight per piece

Mark	Profile	Grade	QTY	Length	Area	Weight
W708	PL10*25	S355JR	1	57.7	0.00	0.1

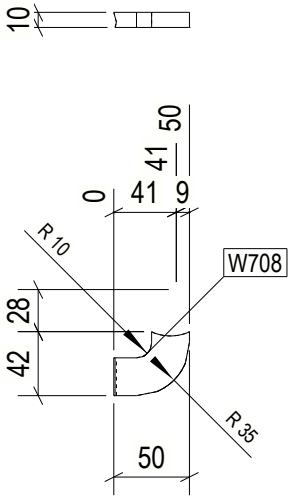

1 REQ'D AS DRAWN MK'D W708

6 October Monorail
Engineering Unit
Valid For Construction

GENERAL NOTES:

1. THE DIMENSIONS SHOWN ARE NOMINAL (IN MILLIMETERS), U.N.O.
2. WELD SIZESHALL BE AISC MINIMUM OF 6 mm UNLESS NOTED OTHERWISE.
3. ALL FIELD WELDS SHALL BE INSPECTED PER QUALITY ASSURANCE AND SPECIAL INSPECTIONS.

REFERENCE DRAWINGS

1	93M-BOA-NAT-LOT-04833
2	93M-BOA-NAT-LOT-09170
3	93M-BOA-NAT-LOT-01976
4	93M-BOA-NAT-LOT-20021
5	
6	
7	
8	
9	

6TH OF OCTOBER CITY RAIL TRANSIT MONORAIL

The Authority | Hill International Consultant | Main Contractor | Structural Designer

KEY PLAN:

REV.	DATE	DSG	CHK	APP	AMENDMENTS	STATUS
B	12/05/2023	M.KH	M.KH	DR.M.M	ISSUED FOR INFORMATION	IFI
A	11/20/2022	M.KH	M.KH	DR.M.M	ISSUED FOR INFORMATION	IFI

SCALE: AS SHOWN | SHOPDRAWING | DATE: 12/05/2023

DRAWING TITLE
6TH OF OCTOBER MONORAIL
SERVICE WALKWAYS
ZONE (1008)
W708

Project Code	Rubric	Initiator	Lot	Ref	Number	Revision
93M	047	ACC	60DEP	DWG	0881	5 B

Tekla structures

approval is subject to approval of coordination package between multi-discipline

REVIEWED WITH COMMENT
MONORAILS PROJECT

All holes are 22mm U.N.O Length & Area & Weight per piece

Mark	Profile	Grade	QTY	Length	Area	Weight
W707	UPN140	S235JR	1	1000.1	0.49	16.0

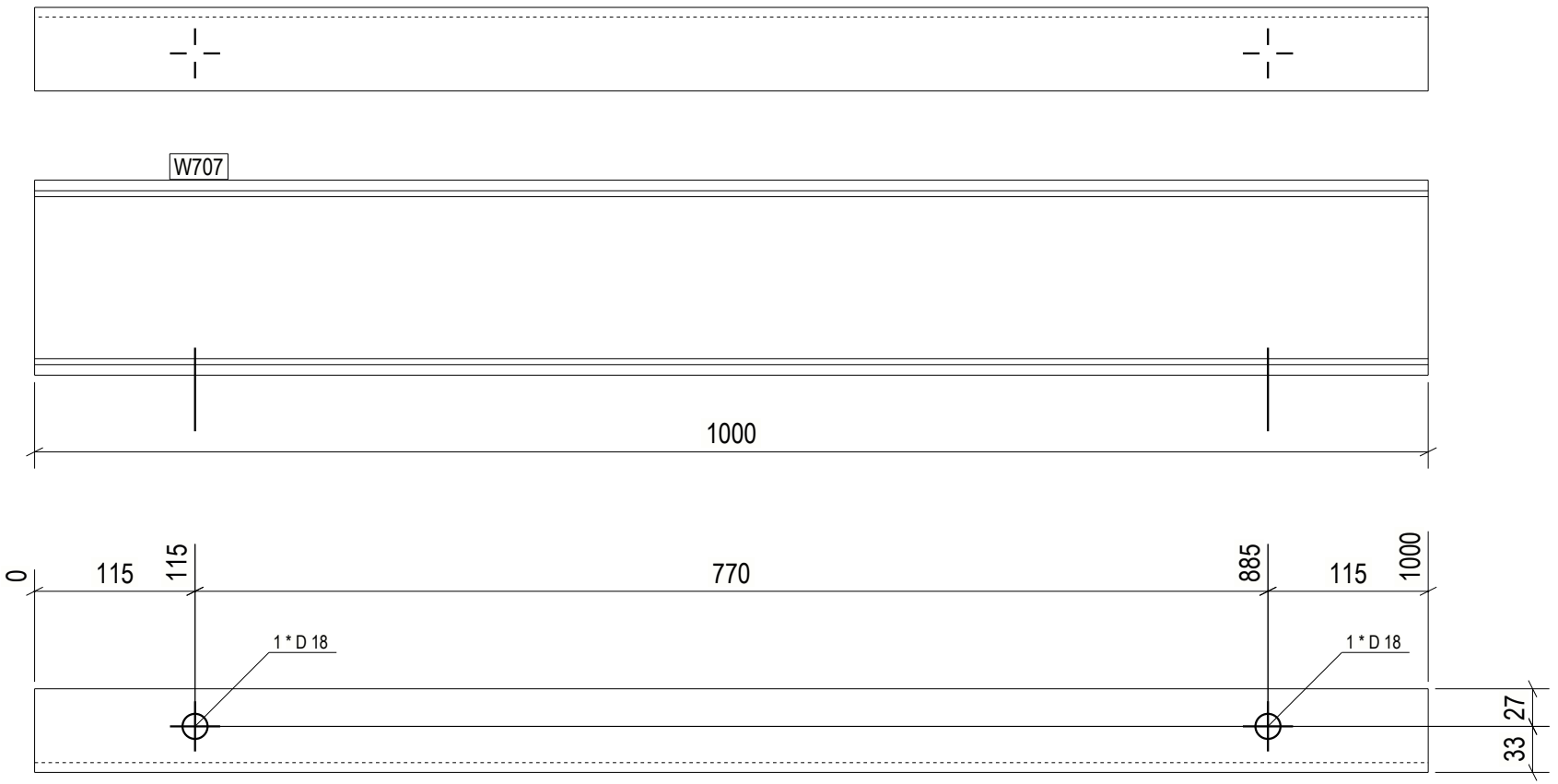

1 REQ'D AS DRAWN MK'D W707

6 October Monorail
Engineering Unit
Valid For Construction

GENERAL NOTES:

1. THE DIMENSIONS SHOWN ARE NOMINAL (IN MILLIMETERS), U.N.O.
2. WELD SIZESHALL BE AISC MINIMUM OF 6 mm UNLESS NOTED OTHERWISE.
3. ALL FIELD WELDS SHALL BE INSPECTED PER QUALITY ASSURANCE AND SPECIAL INSPECTIONS.

REFERENCE DRAWINGS

1	93M-BOA-NAT-LOT-04833
2	93M-BOA-NAT-LOT-09170
3	93M-BOA-NAT-LOT-01976
4	93M-BOA-NAT-LOT-20021
5	
6	
7	
8	
9	

6TH OF OCTOBER CITY RAIL TRANSIT MONORAIL

The Authority — Hill International Consultant — Main Contractor — Structural Designer

KEY PLAN:

SCALE: AS SHOWN | SHOPDRAWING | DATE: 12/09/2023

REV.	DATE	DSG	CHK	APP	AMENDMENTS	STATUS
B	12/05/2023	M.KH	M.KH	DR.BM	ISSUED FOR INFORMATION	IFI
A	11/20/2022	M.KH	M.KH	DR.BM	ISSUED FOR INFORMATION	IFI

DRAWING TITLE
6TH OF OCTOBER MONORAIL
SERVICE WALKWAYS
ZONE (1008)
W707

Project Code	Rubric	Initiator	Lot	Ref	Number	Revision
93M	047	6ACC	60DE	PDWG	0881	B

Tekla structures

approval is subject to approval of coordination package between multi-discipline

REVIEWED WITH COMMENT
MONORAILS PROJECT

All holes are 22mm U.N.O Length & Area & Weight per piece

Mark	Profile	Grade	QTY	Length	Area	Weight
W706	CHS48.3*4.0	S235JR	1	391.3	0.06	1.7

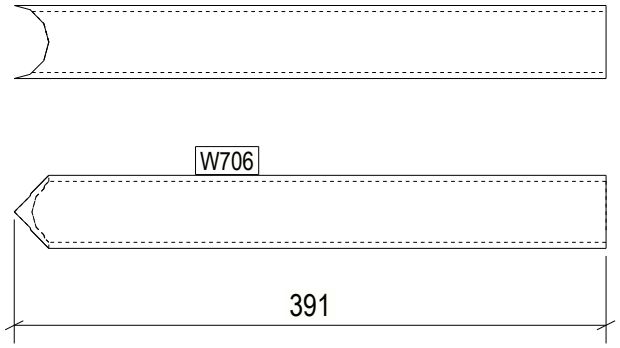

1 REQ'D AS DRAWN MK'D W706

6 October Monorail
Engineering Unit
Valid For Construction

GENERAL NOTES:

1. THE DIMENSIONS SHOWN ARE NOMINAL (IN MILLIMETERS), U.N.O.
2. WELD SIZESHALL BE AISC MINIMUM OF 6 mm UNLESS NOTED OTHERWISE.
3. ALL FIELD WELDS SHALL BE INSPECTED PER QUALITY ASSURANCE AND SPECIAL INSPECTIONS.

REFERENCE DRAWINGS

1	93M-BOA-NAT-LOT-04833
2	93M-BOA-NAT-LOT-09170
3	93M-BOA-NAT-LOT-01976
4	93M-BOA-NAT-LOT-20021
5	
6	
7	
8	
9	

6TH OF OCTOBER CITY RAIL TRANSIT MONORAIL

The Authority | Hill International Consultant | Main Contractor | Structural Designer

KEY PLAN:

SCALE: AS SHOWN | SHOPDRAWING | DATE: 12/09/2023

REV.	DATE	DSG	CHK	APP	AMENDMENTS	STATUS
B	12/05/2023	M.KH	M.KH	DR.BM	ISSUED FOR INFORMATION	IFI
A	11/20/2022	M.KH	M.KH	DR.BM	ISSUED FOR INFORMATION	IFI

DRAWING TITLE

6TH OF OCTOBER MONORAIL
SERVICE WALKWAYS
ZONE (1008)
W706

Project Code	Rubric	Initiator	Lot	Ref	Number	Revision
93M	476	ACC	60DEP	DWG	0881	B

Tekla structures

approval is subject to approval of coordination package between multi-discipline

REVIEWED WITH COMMENT
MONORAILS PROJECT

All holes are 22mm U.N.O Length & Area & Weight per piece

Mark	Profile	Grade	QTY	Length	Area	Weight
W705	CHS48.3*4.0	S235JR	1	1186.2	0.18	5.2

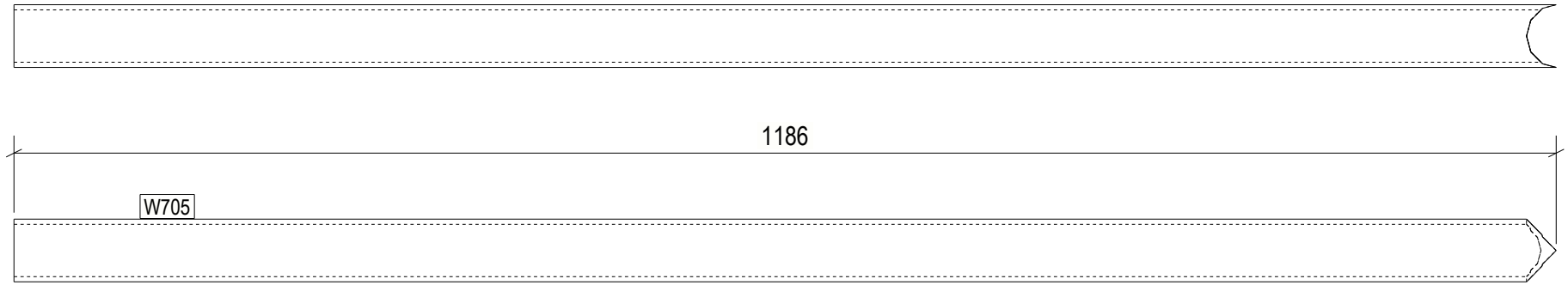

1 REQ'D AS DRAWN MK'D W705

6 October Monorail
Engineering Unit
Valid For Construction

GENERAL NOTES:

1. THE DIMENSIONS SHOWN ARE NOMINAL (IN MILLIMETERS), U.N.O.
2. WELD SIZESHALL BE AISC MINIMUM OF 6 mm UNLESS NOTED OTHERWISE.
3. ALL FIELD WELDS SHALL BE INSPECTED PER QUALITY ASSURANCE AND SPECIAL INSPECTIONS.

REFERENCE DRAWINGS

1	93M-BOA-NAT-LOT-04833
2	93M-BOA-NAT-LOT-09170
3	93M-BOA-NAT-LOT-01976
4	93M-BOA-NAT-LOT-20021
5	
6	
7	
8	
9	

6TH OF OCTOBER CITY RAIL TRANSIT MONORAIL

The Authority — Hill International Consultant — Main Contractor — Structural Designer

KEY PLAN:

REV.	DATE	DSG	CHK	APP	AMENDMENTS	STATUS
B	12/05/2023	M.KH	M.KH	DR.M.M	ISSUED FOR INFORMATION	IFI
A	11/20/2022	M.KH	M.KH	DR.M.M	ISSUED FOR INFORMATION	IFI

SCALE: AS SHOWN | SHOPDRAWING | DATE: 12/05/2023

DRAWING TITLE
6TH OF OCTOBER MONORAIL
SERVICE WALKWAYS
ZONE (1008)
W705

Project Code	Rubric	Initiator	Lot	Ref	Number	Revision
93M	047	6ACC	60DEP	DWG	0881	B

Tekla structures

approval is subject to approval of coordination package between multi-discipline

REVIEWED WITH COMMENT
MONORAILS PROJECT

All holes are 22mm U.N.O Length & Area & Weight per piece

Mark	Profile	Grade	QTY	Length	Area	Weight
W704	CHS48.3*4.0	S235JR	1	138.0	0.02	0.6

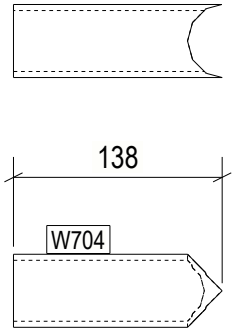

1 REQ'D AS DRAWN MK'D W704

6 October Monorail
Engineering Unit
Valid For Construction

GENERAL NOTES:

1. THE DIMENSIONS SHOWN ARE NOMINAL (IN MILLIMETERS), U.N.O.
2. WELD SIZESHALL BE AISC MINIMUM OF 6 mm UNLESS NOTED OTHERWISE.
3. ALL FIELD WELDS SHALL BE INSPECTED PER QUALITY ASSURANCE AND SPECIAL INSPECTIONS.

REFERENCE DRAWINGS

1	93M-BOA-NAT-LOT-04833
2	93M-BOA-NAT-LOT-09170
3	93M-BOA-NAT-LOT-01976
4	93M-BOA-NAT-LOT-20021
5	
6	
7	
8	
9	

6TH OF OCTOBER CITY RAIL TRANSIT MONORAIL

The Authority | Hill International Consultant | Main Contractor | Structural Designer

KEY PLAN:

REV.	DATE	DSG	CHK	APP	AMENDMENTS	STATUS
B	12/05/2023	M.KH	M.KH	DR.BM	ISSUED FOR INFORMATION	IFI
A	11/20/2022	M.KH	M.KH	DR.BM	ISSUED FOR INFORMATION	IFI

SCALE: AS SHOWN | SHOPDRAWING | DATE: 12/05/2023

DRAWING TITLE
6TH OF OCTOBER MONORAIL
SERVICE WALKWAYS
ZONE (1008)
W704

Project Code	Rubric	Initiator	Lot	Ref	Number	Revision
9 3 M 0 4 7 6	A C C	6 0 D	E P	D W G	0 8 8 1 9	B

Tekla structures

approval is subject to approval of coordination package between multi-discipline

REVIEWED WITH COMMENT MONORAILS PROJECT

All holes are 22mm U.N.O Length & Area & Weight per piece						
W703	CHS48.3*4.0	S235JR	1	140.5	0.02	0.6
Mark	Profile	Grade	QTY	Length	Area	Weight

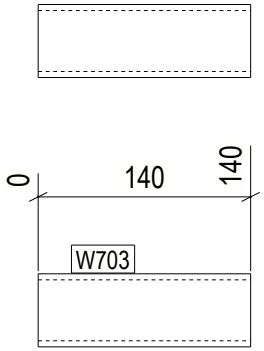

1 REQ'D AS DRAWN MK'D W703

6 October Monorail Engineering Unit
Valid For Construction

GENERAL NOTES:

1. THE DIMENSIONS SHOWN ARE NOMINAL (IN MILLIMETERS), U.N.O.
2. WELD SIZESHALL BE AISC MINIMUM OF 6 mm UNLESS NOTED OTHERWISE.
3. ALL FIELD WELDS SHALL BE INSPECTED PER QUALITY ASSURANCE AND SPECIAL INSPECTIONS.

REFERENCE DRAWINGS

1	93M-BOA-NAT-LOT-04833
2	93M-BOA-NAT-LOT-09170
3	93M-BOA-NAT-LOT-01976
4	93M-BOA-NAT-LOT-20021
5	
6	
7	
8	
9	

6TH OF OCTOBER CITY RAIL TRANSIT MONORAIL

The Authority | Hill International Consultant | Main Contractor | Structural Designer

KEY PLAN:

SCALE	SHOPDRAWING	DATE
AS SHOWN		12/05/2023

REV	DATE	DSG	CHK	APP	AMENDMENTS	STATUS
B	12/05/2023	M.KH	M.KH	DR.M.M	ISSUED FOR INFORMATION	IFI
A	11/20/2022	M.KH	M.KH	DR.M.M	ISSUED FOR INFORMATION	IFI

DRAWING TITLE

6TH OF OCTOBER MONORAIL SERVICE WALKWAYS ZONE (1008) W703

Project Code	Rubric	Initiator	Lot	Ref	Number	Revision
93M	0476	ACC	60DEP	DWG	08820	B

Tekla structures

approval is subject to approval of coordination package between multi-discipline

REVIEWED WITH COMMENT
MONORAILS PROJECT

All holes are 22mm U.N.O Length & Area & Weight per piece

Mark	Profile	Grade	QTY	Length	Area	Weight
W702	CHS48.3*4.0	S235JR	1	703.4	0.11	3.1

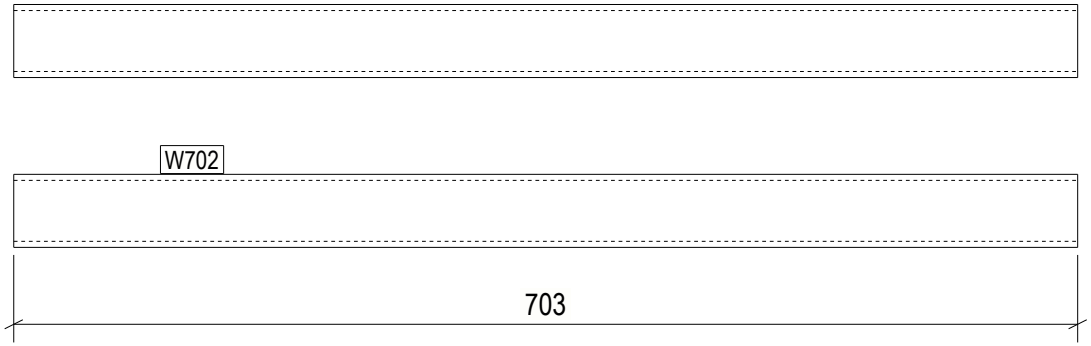

1 REQ'D AS DRAWN MK'D W702

6 October Monorail
Engineering Unit
Valid For Construction

GENERAL NOTES:

1. THE DIMENSIONS SHOWN ARE NOMINAL (IN MILLIMETERS), U.N.O.
2. WELD SIZESHALL BE AISC MINIMUM OF 6 mm UNLESS NOTED OTHERWISE.
3. ALL FIELD WELDS SHALL BE INSPECTED PER QUALITY ASSURANCE AND SPECIAL INSPECTIONS.

REFERENCE DRAWINGS

1	93M-BOA-NAT-LOT-04833
2	93M-BOA-NAT-LOT-09170
3	93M-BOA-NAT-LOT-01976
4	93M-BOA-NAT-LOT-20021
5	
6	
7	
8	
9	

6TH OF OCTOBER CITY RAIL TRANSIT MONORAIL

The Authority | Hill International Consultant | Main Contractor | Structural Designer

KEY PLAN:

REV.	DATE	DSG	CHK	APP	AMENDMENTS	STATUS
B	12/05/2023	M.KH	M.KH	DR.BIM	ISSUED FOR INFORMATION	IFI
A	11/20/2022	M.KH	M.KH	DR.BIM	ISSUED FOR INFORMATION	IFI

SCALE: AS SHOWN | SHOPDRAWING | DATE: 12/05/2023

DRAWING TITLE
6TH OF OCTOBER MONORAIL
SERVICE WALKWAYS
ZONE (1008)
W702

Project Code	Rubric	Initiator	Lot	Ref	Number	Revision
9 3 M	0 4 7 6	A C C	6 0	D E P	D W G	0 8 8 2 1	B

Tekla structures

approval is subject to approval of coordination package between multi-discipline

REVIEWED WITH COMMENT
MONORAILS PROJECT

All holes are 22mm U.N.O Length & Area & Weight per piece

Mark	Profile	Grade	QTY	Length	Area	Weight
W701	CHS48.3*4.0	S235JR	1	138.8	0.02	0.6

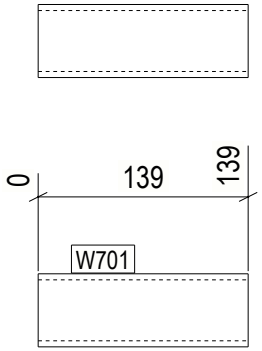

1 REQ'D AS DRAWN MK'D W701

6 October Monorail
Engineering Unit
Valid For Construction

GENERAL NOTES:

1. THE DIMENSIONS SHOWN ARE NOMINAL (IN MILLIMETERS), U.N.O.
2. WELD SIZESHALL BE AISC MINIMUM OF 6 mm UNLESS NOTED OTHERWISE.
3. ALL FIELD WELDS SHALL BE INSPECTED PER QUALITY ASSURANCE AND SPECIAL INSPECTIONS.

REFERENCE DRAWINGS

1	93M-BOA-NAT-LOT-04833
2	93M-BOA-NAT-LOT-09170
3	93M-BOA-NAT-LOT-01976
4	93M-BOA-NAT-LOT-20021
5	
6	
7	
8	
9	

6TH OF OCTOBER CITY RAIL TRANSIT MONORAIL

The Authority — Hill International Consultant — Main Contractor — Structural Designer

KEY PLAN:

SCALE: AS SHOWN | SHOPDRAWING | DATE: 12/09/2023

REV	DATE	DSG	CHK	APP	AMENDMENTS	STATUS
B	12/05/2023	M.KH	M.KH	DR.BUM	ISSUED FOR INFORMATION	IFI
A	11/20/2022	M.KH	M.KH	DR.BUM	ISSUED FOR INFORMATION	IFI

DRAWING TITLE

6TH OF OCTOBER MONORAIL
SERVICE WALKWAYS
ZONE (1008)
W701

Project Code	Rubric	Initiator	Lot	Ref	Number	Revision
93M	047	ACC	60	DEP	DWG	0882	B

Tekla structures

approval is subject to approval of coordination package between multi-discipline

REVIEWED WITH COMMENT
MONORAILS PROJECT

All holes are 22mm U.N.O Length & Area & Weight per piece

Mark	Profile	Grade	QTY	Length	Area	Weight
W700	PL10*25	S355JR	10	79.0	0.01	0.1

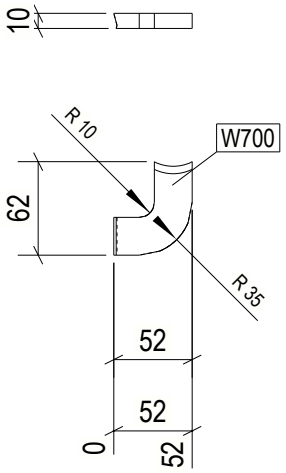

10 REQ'D AS DRAWN MK'D W700

6 October Monorail
Engineering Unit
Valid For Construction

GENERAL NOTES:

1. THE DIMENSIONS SHOWN ARE NOMINAL (IN MILLIMETERS), U.N.O.
2. WELD SIZESHALL BE AISC MINIMUM OF 6 mm UNLESS NOTED OTHERWISE.
3. ALL FIELD WELDS SHALL BE INSPECTED PER QUALITY ASSURANCE AND SPECIAL INSPECTIONS.

REFERENCE DRAWINGS

1	93M-BOA-NAT-LOT-04833
2	93M-BOA-NAT-LOT-09170
3	93M-BOA-NAT-LOT-01976
4	93M-BOA-NAT-LOT-20021
5	
6	
7	
8	
9	

6TH OF OCTOBER CITY RAIL TRANSIT MONORAIL

The Authority | Hill International Consultant | Main Contractor | Structural Designer

KEY PLAN:

REV.	DATE	DSG	CHK	APP	AMENDMENTS	STATUS
B	12/05/2023	M.KH	M.KH	DR.M.M	ISSUED FOR INFORMATION	IFI
A	11/20/2022	M.KH	M.KH	DR.M.M	ISSUED FOR INFORMATION	IFI

SCALE: AS SHOWN | SHOPDRAWING | DATE: 12/05/2023

DRAWING TITLE
6TH OF OCTOBER MONORAIL
SERVICE WALKWAYS
ZONE (1008)
W700

Project Code	Rubric	Initiator	Lot	Ref	Number	Revision
9 3 M	0 4 7 6	A C C	6 0 D	E P	D W G	0 8 8 2 3	B

Tekla structures

approval is subject to approval of coordination package between multi-discipline

REVIEWED WITH COMMENT
MONORAILS PROJECT

All holes are 22mm U.N.O Length & Area & Weight per piece

Mark	Profile	Grade	QTY	Length	Area	Weight
W699	PL10*25	S355JR	1	79.6	0.01	0.1

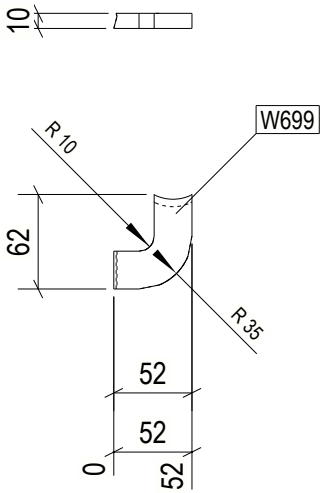

1 REQ'D AS DRAWN MK'D W699

6 October Monorail
Engineering Unit
Valid For Construction

GENERAL NOTES:

1. THE DIMENSIONS SHOWN ARE NOMINAL (IN MILLIMETERS), U.N.O.
2. WELD SIZESHALL BE AISC MINIMUM OF 6 mm UNLESS NOTED OTHERWISE.
3. ALL FIELD WELDS SHALL BE INSPECTED PER QUALITY ASSURANCE AND SPECIAL INSPECTIONS.

REFERENCE DRAWINGS

1	93M-BOA-NAT-LOT-04833
2	93M-BOA-NAT-LOT-09170
3	93M-BOA-NAT-LOT-01976
4	93M-BOA-NAT-LOT-20021
5	
6	
7	
8	
9	

6TH OF OCTOBER CITY RAIL TRANSIT MONORAIL

The Authority | Hill International Consultant | Main Contractor | Structural Designer

KEY PLAN:

REV.	DATE	DSG	CHK	APP	AMENDMENTS	STATUS
B	12/05/2023	M.KH	M.KH	DR.M.M	ISSUED FOR INFORMATION	IFI
A	11/20/2022	M.KH	M.KH	DR.M.M	ISSUED FOR INFORMATION	IFI

SCALE: AS SHOWN | SHOPDRAWING | DATE: 12/05/2023

DRAWING TITLE
6TH OF OCTOBER MONORAIL
SERVICE WALKWAYS
ZONE (1008)
W699

Project Code	Rubric	Initiator	Lot	Ref	Number	Revision
9 3 M	0 4 7 6	A C C	6 0 D	E P	D W G	0 8 8 2 4	B

Tekla structures

approval is subject to approval of coordination package between multi-discipline

REVIEWED WITH COMMENT
MONORAILS PROJECT

All holes are 22mm U.N.O Length & Area & Weight per piece

Mark	Profile	Grade	QTY	Length	Area	Weight
W698	PL10*25	S355JR	2	77.7	0.01	0.1

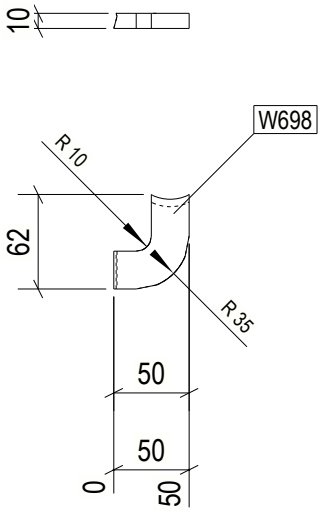

2 REQ'D AS DRAWN MK'D W698

6 October Monorail
Engineering Unit
Valid For Construction

GENERAL NOTES:

1. THE DIMENSIONS SHOWN ARE NOMINAL (IN MILLIMETERS), U.N.O.
2. WELD SIZESHALL BE AISC MINIMUM OF 6 mm UNLESS NOTED OTHERWISE.
3. ALL FIELD WELDS SHALL BE INSPECTED PER QUALITY ASSURANCE AND SPECIAL INSPECTIONS.

REFERENCE DRAWINGS

1	93M-BOA-NAT-LOT-04833
2	93M-BOA-NAT-LOT-09170
3	93M-BOA-NAT-LOT-01976
4	93M-BOA-NAT-LOT-20021
5	
6	
7	
8	
9	

6TH OF OCTOBER CITY RAIL TRANSIT MONORAIL

The Authority — Hill International Consultant — Main Contractor — Structural Designer

KEY PLAN:

SCALE	SHOPDRAWING	DATE
AS SHOWN		12/09/2023

REV	DATE	DSG	CHK	APP	AMENDMENTS	STATUS
B	12/05/2023	M.KH	M.KH	DR.M.M	ISSUED FOR INFORMATION	IFI
A	11/20/2022	M.KH	M.KH	DR.M.M	ISSUED FOR INFORMATION	IFI

DRAWING TITLE

6TH OF OCTOBER MONORAIL
SERVICE WALKWAYS
ZONE (1008)
W698

Project Code	Rubric	Initiator	Lot	Ref	Number	Revision
9 3 M	0 4 7 6	A C C	6 0 D	E P	D W G	0 8 8 2 5	B

Tekla structures

approval is subject to approval of coordination package between multi-discipline

REVIEWED WITH COMMENT
MONORAILS PROJECT

All holes are 22mm U.N.O Length & Area & Weight per piece

Mark	Profile	Grade	QTY	Length	Area	Weight
W697	PL10*25	S355JR	7	77.8	0.01	0.1

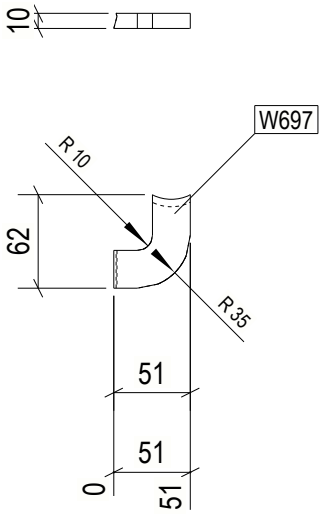

7 REQ'D AS DRAWN MK'D W697

6 October Monorail
Engineering Unit
Valid For Construction

GENERAL NOTES:

1. THE DIMENSIONS SHOWN ARE NOMINAL (IN MILLIMETERS), U.N.O.
2. WELD SIZESHALL BE AISC MINIMUM OF 6 mm UNLESS NOTED OTHERWISE.
3. ALL FIELD WELDS SHALL BE INSPECTED PER QUALITY ASSURANCE AND SPECIAL INSPECTIONS.

REFERENCE DRAWINGS

1	93M-BOA-NAT-LOT-04833
2	93M-BOA-NAT-LOT-09170
3	93M-BOA-NAT-LOT-01976
4	93M-BOA-NAT-LOT-20021
5	
6	
7	
8	
9	

6TH OF OCTOBER CITY RAIL TRANSIT MONORAIL

The Authority | Hill International Consultant | Main Contractor | Structural Designer

KEY PLAN:

REV.	DATE	DSG	CHK	APP	AMENDMENTS	STATUS
B	12/05/2023	M.KH	M.KH	DR.M.M	ISSUED FOR INFORMATION	IFI
A	11/20/2022	M.KH	M.KH	DR.M.M	ISSUED FOR INFORMATION	IFI

SCALE: AS SHOWN | SHOPDRAWING | DATE: 12/05/2023

DRAWING TITLE
6TH OF OCTOBER MONORAIL
SERVICE WALKWAYS
ZONE (1008)
W697

Project Code	Rubric	Initiator	Lot	Ref	Number	Revision
9 3 M	0 4 7 6	A C C	6 0	D E P	D W G	0 8 8 2 6	B

Tekla structures

approval is subject to approval of coordination package between multi-discipline

REVIEWED WITH COMMENT
MONORAILS PROJECT

All holes are 22mm U.N.O Length & Area & Weight per piece

Mark	Profile	Grade	QTY	Length	Area	Weight
W696	CHS48.3*4.0	S235JR	1	48.8	0.01	0.2

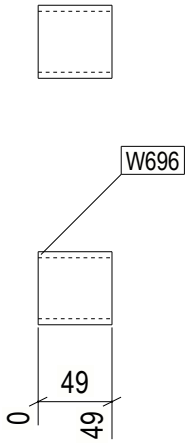

1 REQ'D AS DRAWN MK'D W696

6 October Monorail
Engineering Unit
Valid For Construction

GENERAL NOTES:

1. THE DIMENSIONS SHOWN ARE NOMINAL (IN MILLIMETERS), U.N.O.
2. WELD SIZESHALL BE AISC MINIMUM OF 6 mm UNLESS NOTED OTHERWISE.
3. ALL FIELD WELDS SHALL BE INSPECTED PER QUALITY ASSURANCE AND SPECIAL INSPECTIONS.

REFERENCE DRAWINGS

1	93M-BOA-NAT-LOT-04833
2	93M-BOA-NAT-LOT-09170
3	93M-BOA-NAT-LOT-01976
4	93M-BOA-NAT-LOT-20021
5	
6	
7	
8	
9	

6TH OF OCTOBER CITY RAIL TRANSIT MONORAIL

The Authority | Hill International Consultant | Main Contractor | Structural Designer

KEY PLAN:

REV.	DATE	DSG	CHK	APP	AMENDMENTS	STATUS
B	12/05/2023	M.KH	M.KH	DR.M.M	ISSUED FOR INFORMATION	IFI
A	11/20/2022	M.KH	M.KH	DR.M.M	ISSUED FOR INFORMATION	IFI

SCALE: AS SHOWN | SHOPDRAWING | DATE: 12/05/2023

DRAWING TITLE
6TH OF OCTOBER MONORAIL
SERVICE WALKWAYS
ZONE (1008)
W696

Project Code	Rubric	Initiator	Lot	Ref	Number	Revision
93M047	6ACC60	DEP	DWG	0882	7	B

Tekla structures

approval is subject to approval of coordination package between multi-discipline

REVIEWED WITH COMMENT
MONORAILS PROJECT

All holes are 22mm U.N.O Length & Area & Weight per piece

Mark	Profile	Grade	QTY	Length	Area	Weight
W695	CHS48.3*4.0	S235JR	1	97.4	0.01	0.4

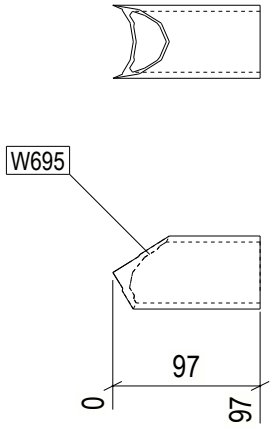

1 REQ'D AS DRAWN MK'D W695

6 October Monorail
Engineering Unit
Valid For Construction

GENERAL NOTES:

1. THE DIMENSIONS SHOWN ARE NOMINAL (IN MILLIMETERS), U.N.O.
2. WELD SIZESHALL BE AISC MINIMUM OF 6 mm UNLESS NOTED OTHERWISE.
3. ALL FIELD WELDS SHALL BE INSPECTED PER QUALITY ASSURANCE AND SPECIAL INSPECTIONS.

REFERENCE DRAWINGS

1	93M-BOA-NAT-LOT-04833
2	93M-BOA-NAT-LOT-09170
3	93M-BOA-NAT-LOT-01976
4	93M-BOA-NAT-LOT-20021
5	
6	
7	
8	
9	

6TH OF OCTOBER CITY RAIL TRANSIT MONORAIL

The Authority | Hill International Consultant | Main Contractor | Structural Designer

KEY PLAN:

REV.	DATE	DSG	CHK	APP	AMENDMENTS	STATUS
B	12/05/2023	M.KH	M.KH	DR.M.M	ISSUED FOR INFORMATION	IFI
A	11/20/2022	M.KH	M.KH	DR.M.M	ISSUED FOR INFORMATION	IFI

SCALE: AS SHOWN | SHOPDRAWING | DATE: 12/05/2023

DRAWING TITLE
6TH OF OCTOBER MONORAIL
SERVICE WALKWAYS
ZONE (1008)
W695

Project Code	Rubric	Initiator	Lot	Ref	Number	Revision
9 3 M	0 4 7 6	A C C	6 0 D	E P	D W G	0 8 8 2 8	B

Tekla structures

approval is subject to approval of coordination package between multi-discipline

REVIEWED WITH COMMENT
MONORAILS PROJECT

All holes are 22mm U.N.O Length & Area & Weight per piece

Mark	Profile	Grade	QTY	Length	Area	Weight
W694	CHS48.3*4.0	S235JR	1	53.5	0.01	0.2

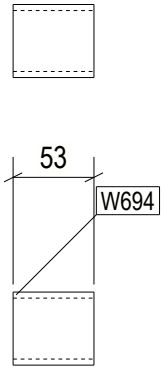

1 REQ'D AS DRAWN MK'D W694

6 October Monorail
Engineering Unit
Valid For Construction

GENERAL NOTES:

1. THE DIMENSIONS SHOWN ARE NOMINAL (IN MILLIMETERS), U.N.O.
2. WELD SIZESHALL BE AISC MINIMUM OF 6 mm UNLESS NOTED OTHERWISE.
3. ALL FIELD WELDS SHALL BE INSPECTED PER QUALITY ASSURANCE AND SPECIAL INSPECTIONS.

REFERENCE DRAWINGS

1	93M-BOA-NAT-LOT-04833
2	93M-BOA-NAT-LOT-09170
3	93M-BOA-NAT-LOT-01976
4	93M-BOA-NAT-LOT-20021
5	
6	
7	
8	
9	

6TH OF OCTOBER CITY RAIL TRANSIT MONORAIL

The Authority | Hill International Consultant | Main Contractor | Structural Designer

KEY PLAN:

SCALE: AS SHOWN | SHOPDRAWING | DATE: 12/09/2023

REV.	DATE	DSG	CHK	APP	AMENDMENTS	STATUS
B	12/05/2023	M.KH	M.KH	DR.M.M	ISSUED FOR INFORMATION	IFI
A	11/20/2022	M.KH	M.KH	DR.M.M	ISSUED FOR INFORMATION	IFI

DRAWING TITLE

6TH OF OCTOBER MONORAIL
SERVICE WALKWAYS
ZONE (1008)
W694

Project Code	Rubric	Initiator	Lot	Ref	Number	Revision
9 3 M 0 4 7 6	A C C	6 0 D	E P	D W G	0 8 8 2 9	B

Tekla structures

approval is subject to approval of coordination package between multi-discipline

REVIEWED WITH COMMENT
MONORAILS PROJECT

All holes are 22mm U.N.O Length & Area & Weight per piece

Mark	Profile	Grade	QTY	Length	Area	Weight
W693	CHS48.3*4.0	S235JR	1	98.3	0.01	0.4

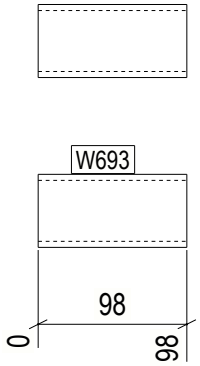

1 REQ'D AS DRAWN MK'D W693

6 October Monorail
Engineering Unit
Valid For Construction

GENERAL NOTES:

1. THE DIMENSIONS SHOWN ARE NOMINAL (IN MILLIMETERS), U.N.O.
2. WELD SIZESHALL BE AISC MINIMUM OF 6 mm UNLESS NOTED OTHERWISE.
3. ALL FIELD WELDS SHALL BE INSPECTED PER QUALITY ASSURANCE AND SPECIAL INSPECTIONS.

REFERENCE DRAWINGS

1	93M-BOA-NAT-LOT-04833
2	93M-BOA-NAT-LOT-09170
3	93M-BOA-NAT-LOT-01976
4	93M-BOA-NAT-LOT-20021
5	
6	
7	
8	
9	

6TH OF OCTOBER CITY RAIL TRANSIT MONORAIL

The Authority | Hill International Consultant | Main Contractor | Structural Designer

KEY PLAN:

REV.	DATE	DSG	CHK	APP	AMENDMENTS	STATUS
B	12/05/2023	M.KH	M.KH	DR.M.M	ISSUED FOR INFORMATION	IFI
A	11/20/2022	M.KH	M.KH	DR.M.M	ISSUED FOR INFORMATION	IFI

SCALE AS SHOWN | SHOPDRAWING | DATE 12/05/2023

DRAWING TITLE
6TH OF OCTOBER MONORAIL
SERVICE WALKWAYS
ZONE (1008)
W693

Project Code	Rubric	Initiator	Lot	Ref	Number	Revision
9 3 M	0 4 7 6	A C C	6 0 D	E P	D W G	0 8 8 3 0	B

Tekla structures

approval is subject to approval of coordination package between multi-discipline

REVIEWED WITH COMMENT
MONORAILS PROJECT

All holes are 22mm U.N.O Length & Area & Weight per piece

Mark	Profile	Grade	QTY	Length	Area	Weight
W692	PL10*100	S355JR	1	282.5	0.06	2.2

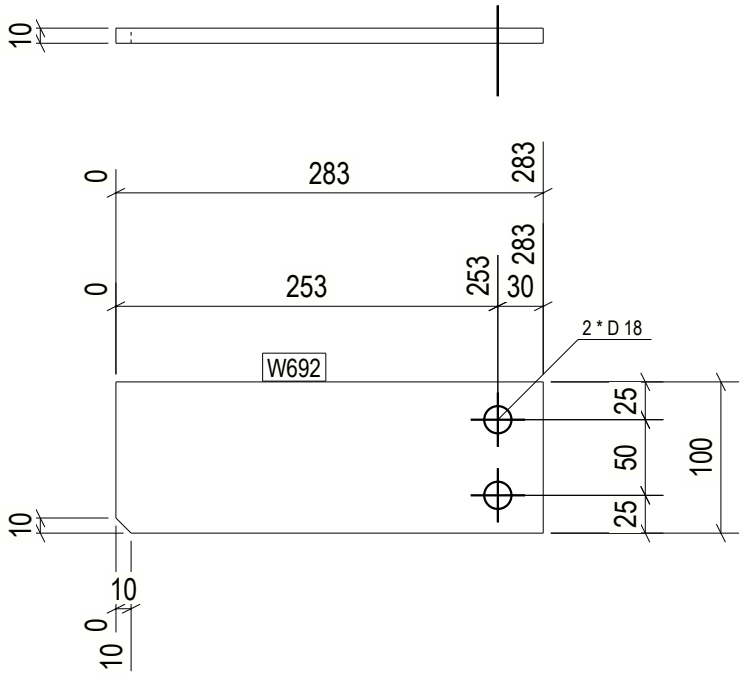

1 REQ'D AS DRAWN MK'D W692

6 October Monorail
Engineering Unit
Valid For Construction

GENERAL NOTES:

1. THE DIMENSIONS SHOWN ARE NOMINAL (IN MILLIMETERS), U.N.O.
2. WELD SIZESHALL BE AISC MINIMUM OF 6 mm UNLESS NOTED OTHERWISE.
3. ALL FIELD WELDS SHALL BE INSPECTED PER QUALITY ASSURANCE AND SPECIAL INSPECTIONS.

REFERENCE DRAWINGS

1	93M-BOA-NAT-LOT-04833
2	93M-BOA-NAT-LOT-09170
3	93M-BOA-NAT-LOT-01976
4	93M-BOA-NAT-LOT-20021
5	
6	
7	
8	
9	

6TH OF OCTOBER CITY RAIL TRANSIT MONORAIL

The Authority | Hill International Consultant | Main Contractor | Structural Designer

KEY PLAN:

REV.	DATE	DSG	CHK	APP	AMENDMENTS	STATUS
B	12/05/2023	M.KH	M.KH	DR.BM	ISSUED FOR INFORMATION	IFI
A	11/20/2022	M.KH	M.KH	DR.BM	ISSUED FOR INFORMATION	IFI

SCALE AS SHOWN | SHOPDRAWING | DATE 12/05/2023

DRAWING TITLE
6TH OF OCTOBER MONORAIL
SERVICE WALKWAYS
ZONE (1008)
W692

Project Code	Rubric	Initiator	Lot	Ref	Number	Revision
9 3 M	0 4 7 6	A C C	6 0 D	E P	D W G	0 8 8 3 1	B

Tekla structures

approval is subject to approval of coordination package between multi-discipline

REVIEWED WITH COMMENT
MONORAILS PROJECT

All holes are 22mm U.N.O Length & Area & Weight per piece						
W691	L100*10	S235JR	1	490.0	0.19	7.1
Mark	Profile	Grade	QTY	Length	Area	Weight

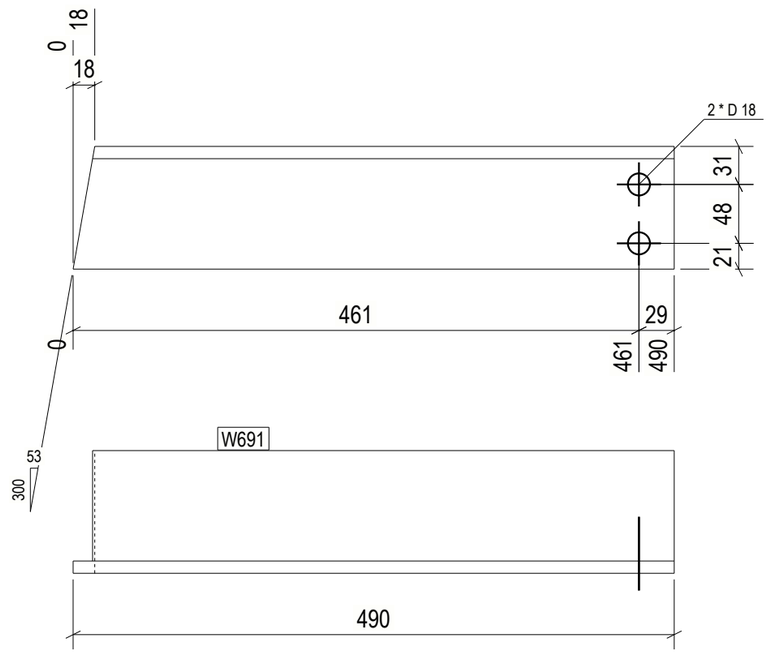

1 REQ'D AS DRAWN MK'D W691

GENERAL NOTES:

1. THE DIMENSIONS SHOWN ARE NOMINAL (IN MILLIMETERS), U.N.O.
2. WELD SIZESHALL BE AISC MINIMUM OF 6 mm UNLESS NOTED OTHERWISE.
3. ALL FIELD WELDS SHALL BE INSPECTED PER QUALITY ASSURANCE AND SPECIAL INSPECTIONS.

REFERENCE DRAWINGS

1	93M-BOA-NAT-LOT-04833
2	93M-BOA-NAT-LOT-09170
3	93M-BOA-NAT-LOT-01976
4	93M-BOA-NAT-LOT-20021
5	
6	
7	
8	
9	

6TH OF OCTOBER CITY RAIL TRANSIT MONORAIL

The Authority | Consultant: Hill International | Main Contractor: ORASCOM CONSTRUCTION / BOMBARDIER | Structural Designer: INNOVA TRANSPORTATION

KEY PLAN:

6 October Monorail
Engineering Unit
Valid For Construction

SCALE	SHOP DRAWING	DATE
AS SHOWN		12/05/2023

REV	DATE	DSN	CHK	APP	AMENDMENTS DESCRIPTION	STATUS
B	12/05/2023	M.KH	M.KH	DR.M.M	ISSUED FOR INFORMATION	IFI
A	17/04/2022	D.SS	C.HK	APP.	AMENDMENTS DESCRIPTION	STATUS

DRAWING TITLE

6TH OF OCTOBER MONORAIL
SERVICE WALKWAYS
ZONE (1008)
W691

Project Code	Rubric	Initiator	Lot	Ref	Number	Revision
9 3 M	0 4 7 6	A C C	6 0 D E P	D W G	0 8 8 3 2	B

Tekla structures

approval is subject to approval of coordination package between multi-discipline

REVIEWED WITH COMMENT
MONORAILS PROJECT

All holes are 22mm U.N.O Length & Area & Weight per piece

Mark	Profile	Grade	QTY	Length	Area	Weight
W690	L100*10	S235JR	1	587.5	0.23	8.6

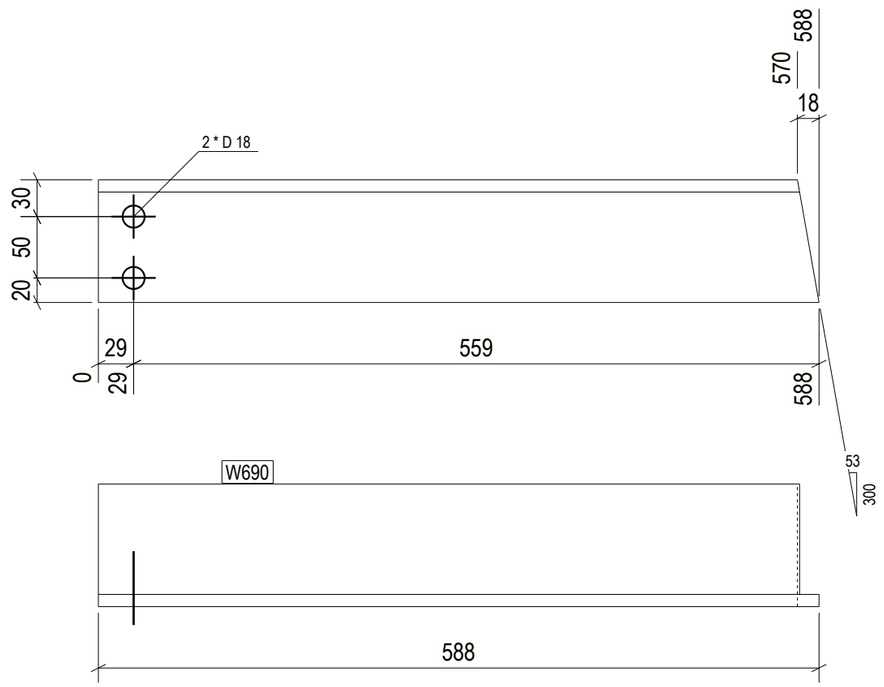

1 REQ'D AS DRAWN MK'D W690

GENERAL NOTES:

1. THE DIMENSIONS SHOWN ARE NOMINAL (IN MILLIMETERS), U.N.O.
2. WELD SIZESHALL BE AISC MINIMUM OF 6 mm UNLESS NOTED OTHERWISE.
3. ALL FIELD WELDS SHALL BE INSPECTED PER QUALITY ASSURANCE AND SPECIAL INSPECTIONS.

REFERENCE DRAWINGS

1	93M-BOA-NAT-LOT-04833
2	93M-BOA-NAT-LOT-09170
3	93M-BOA-NAT-LOT-01976
4	93M-BOA-NAT-LOT-20021
5	
6	
7	
8	
9	

6TH OF OCTOBER CITY RAIL TRANSIT MONORAIL

The Authority | Consultant: Hill International | Main Contractor: ORASCOM CONSTRUCTION, BOMBARDIER | Structural Designer: INNOVA TRANSPORTATION

KEY PLAN:

6 October Monorail Engineering Unit
Valid For Construction

SCALE	SHOP DRAWING	DATE
AS SHOWN		12/05/2023

REV.	DATE	DRW.	CHK.	APP.	AMENDMENTS DESCRIPTION	STATUS
B	12/05/2023	M.KH	M.KH	DR.M.M	ISSUED FOR INFORMATION	IFI

DRAWING TITLE

6TH OF OCTOBER MONORAIL
SERVICE WALKWAYS
ZONE (1008)
W690

Project Code	Rubric	Initiator	Lot	Ref	Number	Revision
9 3 M	0 4 7 6	A C C	6 0 D E P	D W G	0 8 8 3 3	B

Tekla structures

approval is subject to approval of coordination package between multi-discipline

REVIEWED WITH COMMENT
MONORAILS PROJECT

All holes are 22mm U.N.O Length & Area & Weight per piece

Mark	Profile	Grade	QTY	Length	Area	Weight
W689	PL10*100	S355JR	1	275.0	0.06	2.2

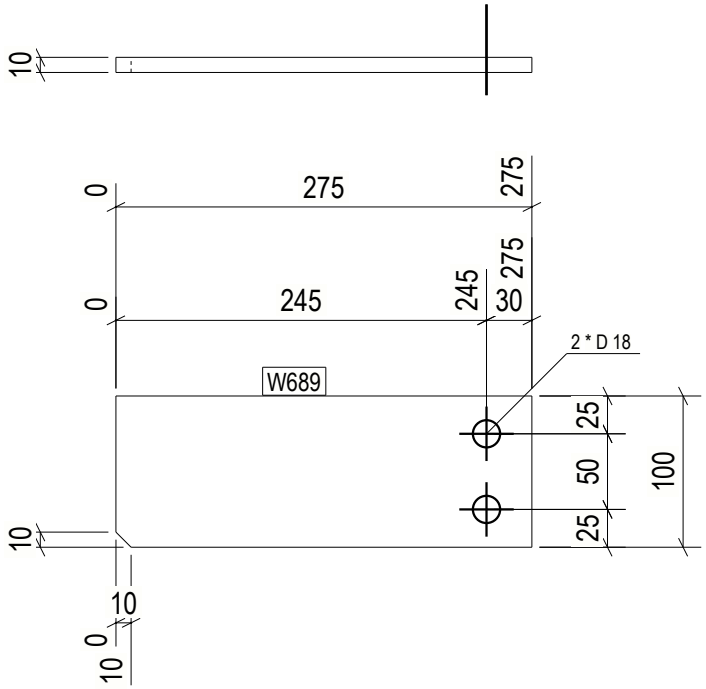

1 REQ'D AS DRAWN MK'D W689

6 October Monorail
Engineering Unit
Valid For Construction

GENERAL NOTES:

1. THE DIMENSIONS SHOWN ARE NOMINAL (IN MILLIMETERS), U.N.O.
2. WELD SIZESHALL BE AISC MINIMUM OF 6 mm UNLESS NOTED OTHERWISE.
3. ALL FIELD WELDS SHALL BE INSPECTED PER QUALITY ASSURANCE AND SPECIAL INSPECTIONS.

REFERENCE DRAWINGS

1	93M-BOA-NAT-LOT-04833
2	93M-BOA-NAT-LOT-09170
3	93M-BOA-NAT-LOT-01976
4	93M-BOA-NAT-LOT-20021
5	
6	
7	
8	
9	

6TH OF OCTOBER CITY RAIL TRANSIT MONORAIL

The Authority | Hill International Consultant | Main Contractor | Structural Designer

KEY PLAN:

REV.	DATE	DSG	CHK	APP	AMENDMENTS	STATUS
B	12/05/2023	M.KH	M.KH	DR.M.M	ISSUED FOR INFORMATION	IFI
A	11/20/2022	M.KH	M.KH	DR.M.M	ISSUED FOR INFORMATION	IFI

SCALE AS SHOWN | SHOPDRAWING | DATE 12/05/2023

DRAWING TITLE
6TH OF OCTOBER MONORAIL
SERVICE WALKWAYS
ZONE (1008)
W689

Project Code	Rubric	Initiator	Lot	Ref	Number	Revision
9 3 M 0 4 7 6	A C C	6 0	D E P	D W G	0 8 8 3 4	B

Tekla structures

approval is subject to approval of coordination package between multi-discipline

REVIEWED WITH COMMENT
MONORAILS PROJECT

All holes are 22mm U.N.O Length & Area & Weight per piece

Mark	Profile	Grade	QTY	Length	Area	Weight
W688	L100*10	S235JR	1	258.7	0.11	3.8

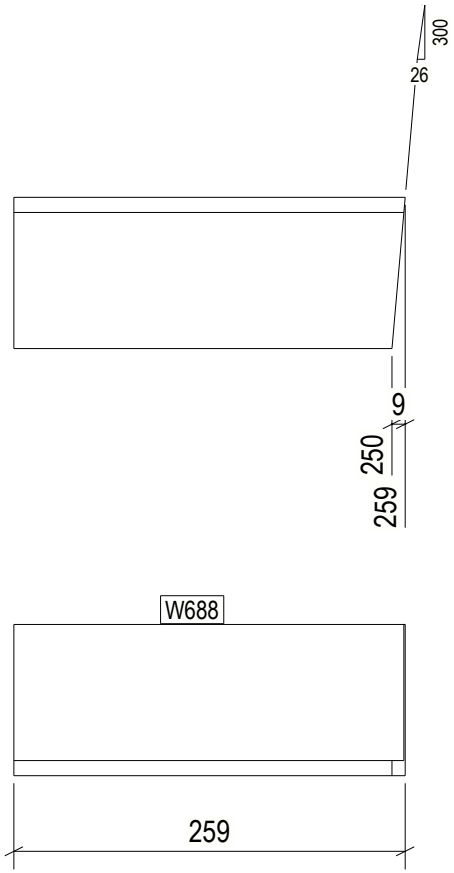

1 REQ'D AS DRAWN MK'D W688

6 October Monorail
Engineering Unit
Valid For Construction

GENERAL NOTES:

1. THE DIMENSIONS SHOWN ARE NOMINAL (IN MILLIMETERS), U.N.O.
2. WELD SIZESHALL BE AISC MINIMUM OF 6 mm UNLESS NOTED OTHERWISE.
3. ALL FIELD WELDS SHALL BE INSPECTED PER QUALITY ASSURANCE AND SPECIAL INSPECTIONS.

REFERENCE DRAWINGS

1	93M-BOA-NAT-LOT-04833
2	93M-BOA-NAT-LOT-09170
3	93M-BOA-NAT-LOT-01976
4	93M-BOA-NAT-LOT-20021
5	
6	
7	
8	
9	

6TH OF OCTOBER CITY RAIL TRANSIT MONORAIL

The Authority | Hill International Consultant | Main Contractor | Structural Designer

KEY PLAN:

REV.	DATE	DSG	CHK	APP	AMENDMENTS	STATUS
B	12/05/2023	M.KH	M.KH	DR.M.M	ISSUED FOR INFORMATION	IFI
A	11/20/2022	M.KH	M.KH	DR.M.M	ISSUED FOR INFORMATION	IFI

SCALE AS SHOWN | SHOPDRAWING | DATE 12/05/2023

DRAWING TITLE
6TH OF OCTOBER MONORAIL
SERVICE WALKWAYS
ZONE (1008)
W688

Project Code	Rubric	Initiator	Lot	Ref	Number	Revision
9 3 M	0 4 7 6	A C C	6 0 D	E P	D W G	0 8 3 5	B

Tekla structures

approval is subject to approval of coordination package between multi-discipline

REVIEWED WITH COMMENT
MONORAILS PROJECT

All holes are 22mm U.N.O Length & Area & Weight per piece

Mark	Profile	Grade	QTY	Length	Area	Weight
W687	L100*10	S235JR	1	258.7	0.11	3.8

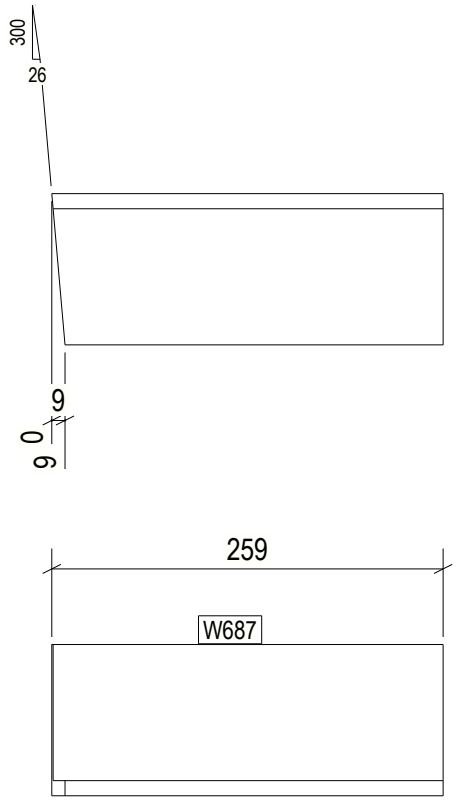

1 REQ'D AS DRAWN MK'D W687

6 October Monorail
Engineering Unit
Valid For Construction

GENERAL NOTES:

1. THE DIMENSIONS SHOWN ARE NOMINAL (IN MILLIMETERS), U.N.O.
2. WELD SIZESHALL BE AISC MINIMUM OF 6 mm UNLESS NOTED OTHERWISE.
3. ALL FIELD WELDS SHALL BE INSPECTED PER QUALITY ASSURANCE AND SPECIAL INSPECTIONS.

REFERENCE DRAWINGS

1	93M-BOA-NAT-LOT-04833
2	93M-BOA-NAT-LOT-09170
3	93M-BOA-NAT-LOT-01976
4	93M-BOA-NAT-LOT-20021
5	
6	
7	
8	
9	

6TH OF OCTOBER CITY RAIL TRANSIT MONORAIL

The Authority — Hill International Consultant — Main Contractor — Structural Designer

KEY PLAN:

REV.	DATE	DSG	CHK	APP	AMENDMENTS	STATUS
B	12/05/2023	M.KH	M.KH	DR.M.M	ISSUED FOR INFORMATION	IFI
A	11/20/2022	M.KH	M.KH	DR.M.M	ISSUED FOR INFORMATION	IFI

SCALE: AS SHOWN | SHOPDRAWING | DATE: 12/05/2023

DRAWING TITLE
6TH OF OCTOBER MONORAIL
SERVICE WALKWAYS
ZONE (1008)
W687

Project Code	Rubric	Initiator	Lot	Ref	Number	Revision
9 3 M	0 4 7 6	A C C	6 0 D	E P	D W G	0 8 8 3 6	B

Tekla structures

approval is subject to approval of coordination package between multi-discipline

REVIEWED WITH COMMENT
MONORAILS PROJECT

All holes are 22mm U.N.O Length & Area & Weight per piece

Mark	Profile	Grade	QTY	Length	Area	Weight
W686	UPN80	S235JR	10	550.0	0.17	4.7

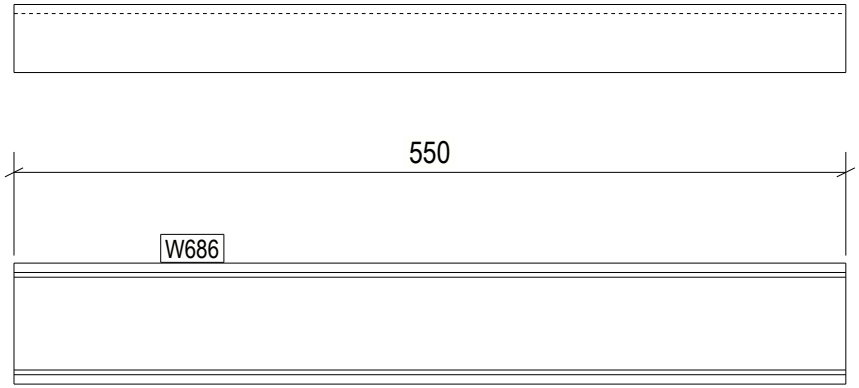

10 REQ'D AS DRAWN MK'D W686

6 October Monorail
Engineering Unit
Valid For Construction

GENERAL NOTES:

1. THE DIMENSIONS SHOWN ARE NOMINAL (IN MILLIMETERS), U.N.O.
2. WELD SIZESHALL BE AISC MINIMUM OF 6 mm UNLESS NOTED OTHERWISE.
3. ALL FIELD WELDS SHALL BE INSPECTED PER QUALITY ASSURANCE AND SPECIAL INSPECTIONS.

REFERENCE DRAWINGS

1	93M-BOA-NAT-LOT-04833
2	93M-BOA-NAT-LOT-09170
3	93M-BOA-NAT-LOT-01976
4	93M-BOA-NAT-LOT-20021
5	
6	
7	
8	
9	

6TH OF OCTOBER CITY RAIL TRANSIT MONORAIL

The Authority — Hill International Consultant — Main Contractor — Structural Designer

KEY PLAN:

REV.	DATE	DSG	CHK	APP	AMENDMENTS	STATUS
B	12/05/2023	M.KH	M.KH	DR.M.M	ISSUED FOR INFORMATION	IFI
A	11/20/2022	M.KH	M.KH	DR.M.M	ISSUED FOR INFORMATION	IFI

SCALE: AS SHOWN | SHOPDRAWING | DATE: 12/05/2023

DRAWING TITLE
6TH OF OCTOBER MONORAIL
SERVICE WALKWAYS
ZONE (1008)
W686

Project Code	Rubric	Initiator	Lot	Ref	Number	Revision
9 3 M	0 4 7 6	A C C	6 0	D E P	D W G	0 8 8 3 7	B

Tekla structures

approval is subject to approval of coordination package between multi-discipline

REVIEWED WITH COMMENT
MONORAILS PROJECT

All holes are 22mm U.N.O Length & Area & Weight per piece						
W685	L100*10	S235JR	1	3380.0	1.35	50.2
Mark	Profile	Grade	QTY	Length	Area	Weight

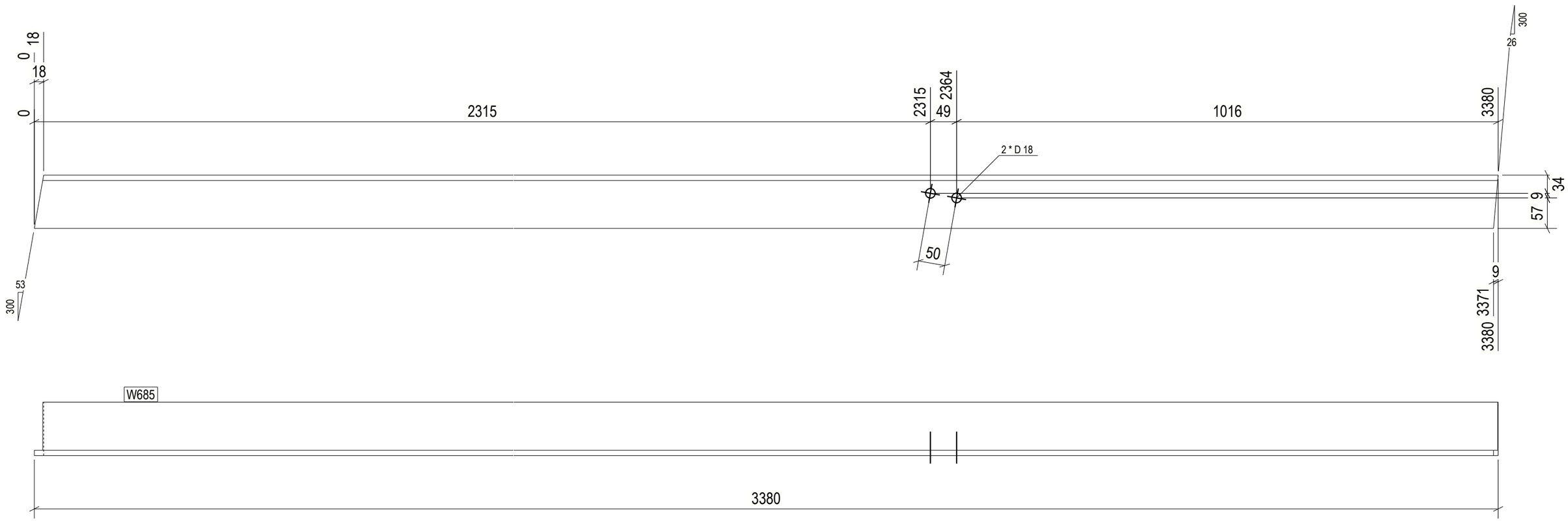

1 REQ'D AS DRAWN MK'D W685

GENERAL NOTES:

1. THE DIMENSIONS SHOWN ARE NOMINAL (IN MILLIMETERS), U.N.O.
2. WELD SIZESHALL BE AISC MINIMUM OF 6 mm UNLESS NOTED OTHERWISE.
3. ALL FIELD WELDS SHALL BE INSPECTED PER QUALITY ASSURANCE AND SPECIAL INSPECTIONS.

REFERENCE DRAWINGS

1	93M-BOA-NAT-LOT-04833
2	93M-BOA-NAT-LOT-09170
3	93M-BOA-NAT-LOT-01976
4	93M-BOA-NAT-LOT-20021
5	
6	
7	
8	
9	

6TH OF OCTOBER CITY RAIL TRANSIT MONORAIL

The Authority | Consultant: Hill International | Main Contractor | Structural Designer

KEY PLAN:

6 October Monorail
Engineering Unit
Valid For Construction

SCALE	SHOP DRAWING	DATE
AS SHOWN		12/05/2023

REV.	DATE	DSN	CHK	APP	AMENDMENTS	STATUS
B	12/05/2023	M.KH	M.KH	DR.M.M	ISSUED FOR INFORMATION	IFI

DRAWING TITLE

6TH OF OCTOBER MONORAIL
SERVICE WALKWAYS
ZONE (1008)
W685

Project Code	Rubric	Initiator	Lot	Ref	Number	Revision
9 3 M	0 4 7 6	A C C	6 0 D E P	D W G	0 8 8 3 8	B

Tekla structures

approval is subject to approval of coordination package between multi-discipline

REVIEWED WITH COMMENT
MONORAILS PROJECT

All holes are 22mm U.N.O Length & Area & Weight per piece

Mark	Profile	Grade	QTY	Length	Area	Weight
W684	CHS48.3*4.0	S235JR	1	103.1	0.02	0.5

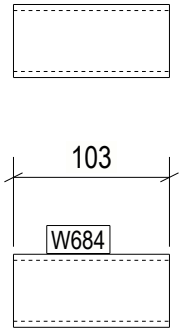

1 REQ'D AS DRAWN MK'D W684

6 October Monorail
Engineering Unit
Valid For Construction

GENERAL NOTES:

1. THE DIMENSIONS SHOWN ARE NOMINAL (IN MILLIMETERS), U.N.O.
2. WELD SIZESHALL BE AISC MINIMUM OF 6 mm UNLESS NOTED OTHERWISE.
3. ALL FIELD WELDS SHALL BE INSPECTED PER QUALITY ASSURANCE AND SPECIAL INSPECTIONS.

REFERENCE DRAWINGS

1	93M-BOA-NAT-LOT-04833
2	93M-BOA-NAT-LOT-09170
3	93M-BOA-NAT-LOT-01976
4	93M-BOA-NAT-LOT-20021
5	
6	
7	
8	
9	

6TH OF OCTOBER CITY RAIL TRANSIT MONORAIL

The Authority | Hill International Consultant | Main Contractor | Structural Designer

KEY PLAN:

REV.	DATE	DSG	CHK	APP	AMENDMENTS	STATUS
B	12/05/2023	M.KH	M.KH	DR.BM	ISSUED FOR INFORMATION	IFI
A	11/20/2022	M.KH	M.KH	DR.BM	ISSUED FOR INFORMATION	IFI

SCALE: AS SHOWN | SHOPDRAWING | DATE: 12/05/2023

DRAWING TITLE
6TH OF OCTOBER MONORAIL
SERVICE WALKWAYS
ZONE (1008)
W684

Project Code	Rubric	Initiator	Lot	Ref	Number	Revision
9 3 M	0 4 7 6	A C C	6 0 D	E P	D W G	0 8 8 3 9	B

Tekla structures

approval is subject to approval of coordination package between multi-discipline

REVIEWED WITH COMMENT
MONORAILS PROJECT

All holes are 22mm U.N.O Length & Area & Weight per piece

Mark	Profile	Grade	QTY	Length	Area	Weight
W683	L60*6	S235JR	1	1759.3	0.42	9.4

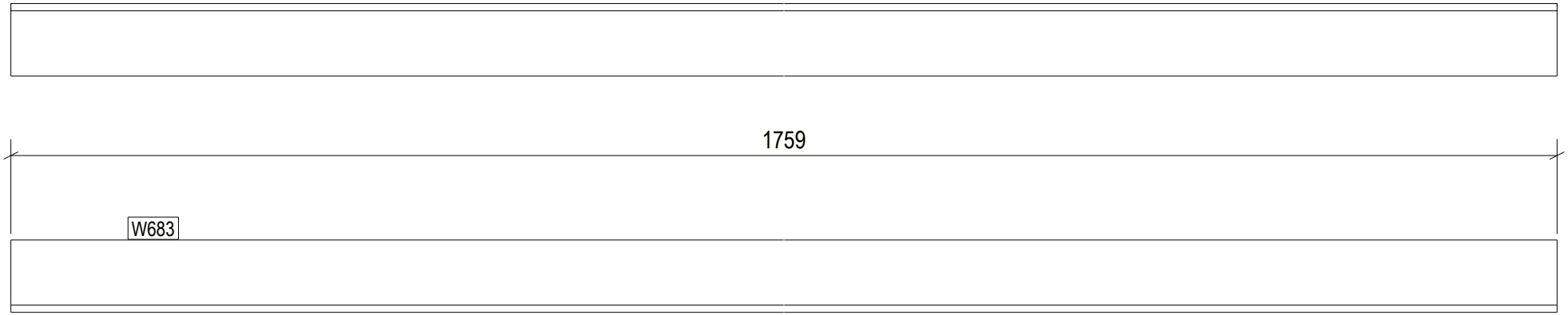

1 REQ'D AS DRAWN MK'D W683

6 October Monorail
Engineering Unit
Valid For Construction

GENERAL NOTES:

1. THE DIMENSIONS SHOWN ARE NOMINAL (IN MILLIMETERS), U.N.O.
2. WELD SIZESHALL BE AISC MINIMUM OF 6 mm UNLESS NOTED OTHERWISE.
3. ALL FIELD WELDS SHALL BE INSPECTED PER QUALITY ASSURANCE AND SPECIAL INSPECTIONS.

REFERENCE DRAWINGS

1	93M-BOA-NAT-LOT-04833
2	93M-BOA-NAT-LOT-09170
3	93M-BOA-NAT-LOT-01976
4	93M-BOA-NAT-LOT-20021
5	
6	
7	
8	
9	

6TH OF OCTOBER CITY RAIL TRANSIT MONORAIL

The Authority — Hill International Consultant — Main Contractor — Structural Designer

KEY PLAN:

REV	DATE	DSG	CHK	APP	AMENDMENTS	STATUS
B	12/05/2023	M.KH	M.KH	DR.M.M	ISSUED FOR INFORMATION	IFI
A	11/20/2022	M.KH	M.KH	DR.M.M	ISSUED FOR INFORMATION	IFI

SCALE: AS SHOWN | SHOPDRAWING | DATE: 12/05/2023

DRAWING TITLE
6TH OF OCTOBER MONORAIL
SERVICE WALKWAYS
ZONE (1008)
W683

Project Code	Rubric	Initiator	Lot	Ref	Number	Revision
9 3 M	0 4 7 6	A C C	6 0 D E	P D W	G 0 8 8 4 0	B

Tekla structures

approval is subject to approval of coordination package between multi-discipline

REVIEWED WITH COMMENT
MONORAILS PROJECT

All holes are 22mm U.N.O Length & Area & Weight per piece

Mark	Profile	Grade	QTY	Length	Area	Weight
W682	L60*6	S235JR	1	935.0	0.23	5.0

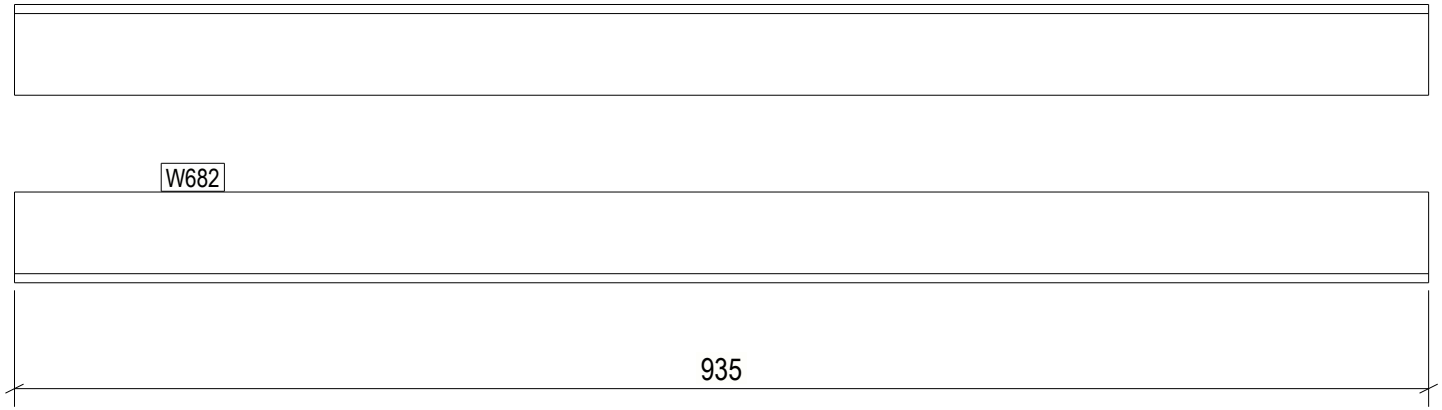

1 REQ'D AS DRAWN MK'D W682

6 October Monorail
Engineering Unit
Valid For Construction

Tekla structures

GENERAL NOTES:

1. THE DIMENSIONS SHOWN ARE NOMINAL (IN MILLIMETERS), U.N.O.
2. WELD SIZESHALL BE AISC MINIMUM OF 6 mm UNLESS NOTED OTHERWISE.
3. ALL FIELD WELDS SHALL BE INSPECTED PER QUALITY ASSURANCE AND SPECIAL INSPECTIONS.

REFERENCE DRAWINGS

1	93M-BOA-NAT-LOT-04833
2	93M-BOA-NAT-LOT-09170
3	93M-BOA-NAT-LOT-01976
4	93M-BOA-NAT-LOT-20021
5	
6	
7	
8	
9	

6TH OF OCTOBER CITY RAIL TRANSIT MONORAIL

The Authority — Hill International Consultant — Main Contractor — Structural Designer

KEY PLAN:

REV.	DATE	DSG	CHK	APP	AMENDMENTS	STATUS
B	12/05/2023	M.KH	M.KH	DR.BIM	ISSUED FOR INFORMATION	IFI
A	11/20/2022	M.KH	M.KH	DR.BIM	ISSUED FOR INFORMATION	IFI

SCALE: AS SHOWN | SHOPDRAWING | DATE: 12/05/2023

DRAWING TITLE

6TH OF OCTOBER MONORAIL
SERVICE WALKWAYS
ZONE (1008)
W682

Project Code	Rubric	Initiator	Lot	Ref	Number	Revision
9 3 M	0 4 7 6	A C C	6 0 D E	P D W	G 0 8	8 4 1 B

approval is subject to approval of coordination package between multi-discipline

REVIEWED WITH COMMENT MONORAILS PROJECT

All holes are 22mm U.N.O Length & Area & Weight per piece						
W681	L60*6	S235JR	1	1771.3	0.43	9.5
Mark	Profile	Grade	QTY	Length	Area	Weight

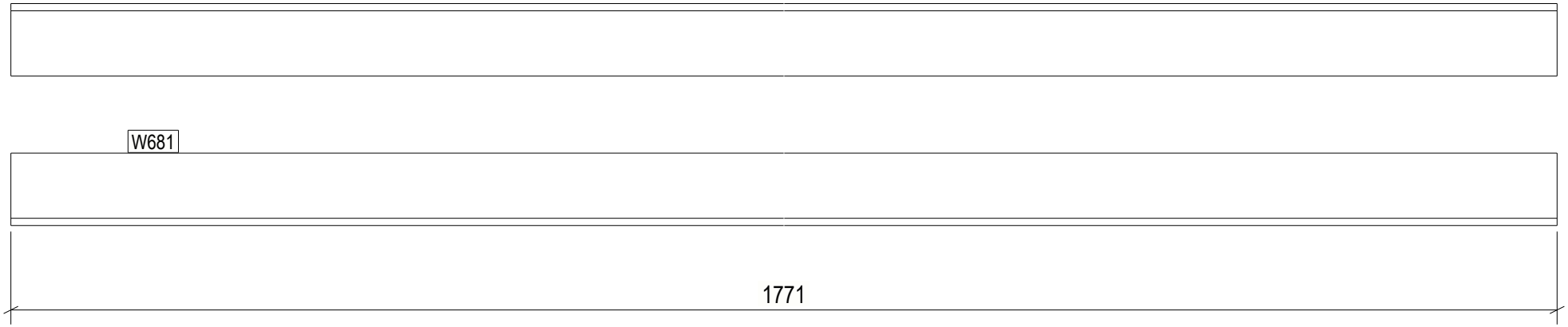

1 REQ'D AS DRAWN MK'D W681

6 October Monorail Engineering Unit
Valid For Construction

GENERAL NOTES:

1. THE DIMENSIONS SHOWN ARE NOMINAL (IN MILLIMETERS), U.N.O.
2. WELD SIZESHALL BE AISC MINIMUM OF 6 mm UNLESS NOTED OTHERWISE.
3. ALL FIELD WELDS SHALL BE INSPECTED PER QUALITY ASSURANCE AND SPECIAL INSPECTIONS.

REFERENCE DRAWINGS

1	93M-BOA-NAT-LOT-04833
2	93M-BOA-NAT-LOT-09170
3	93M-BOA-NAT-LOT-01976
4	93M-BOA-NAT-LOT-20021
5	
6	
7	
8	
9	

6TH OF OCTOBER CITY RAIL TRANSIT MONORAIL

The Authority | Hill International Consultant | Main Contractor | Structural Designer

KEY PLAN:

SCALE	SHOPDRAWING	DATE
AS SHOWN		12/05/2023

REV	DATE	DSG	CHK	APP	AMENDMENTS	STATUS
B	12/05/2023	M.KH	M.KH	DR.M.M	ISSUED FOR INFORMATION	IFI
A	11/20/2022	M.KH	M.KH	DR.M.M	ISSUED FOR INFORMATION	IFI

DRAWING TITLE

6TH OF OCTOBER MONORAIL SERVICE WALKWAYS ZONE (1008)
W681

Project Code	Rubric	Initiator	Lot	Ref	Number	Revision
93M	0476	ACC	60DEP	DWG	08842	B

Tekla structures

approval is subject to approval of coordination package between multi-discipline

REVIEWED WITH COMMENT
MONORAILS PROJECT

All holes are 22mm U.N.O Length & Area & Weight per piece

Mark	Profile	Grade	QTY	Length	Area	Weight
W680	L60*6	S235JR	2	964.2	0.23	5.2

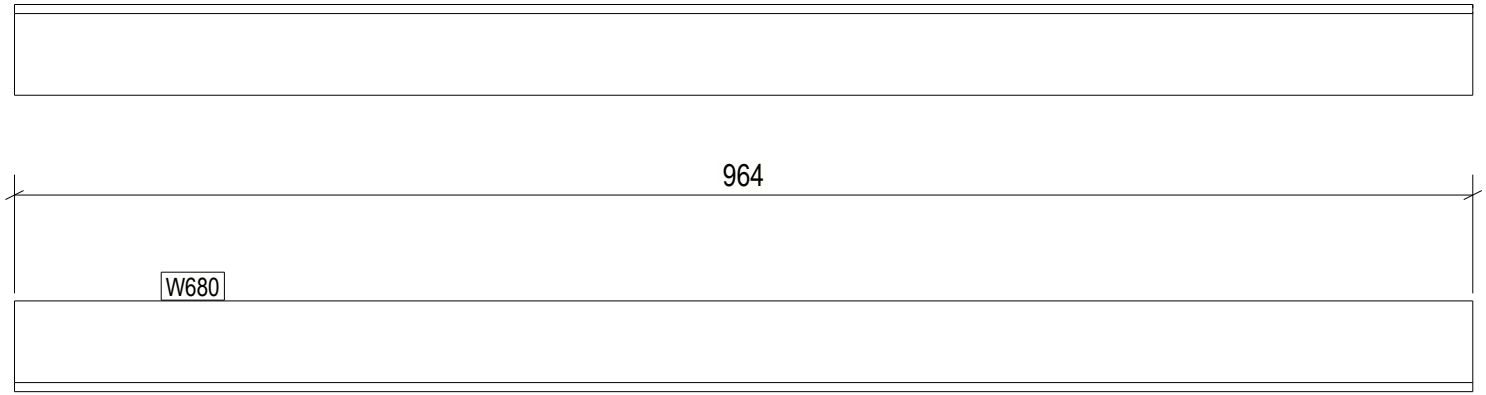

2 REQ'D AS DRAWN MK'D W680

6 October Monorail
Engineering Unit
Valid For Construction

GENERAL NOTES:

1. THE DIMENSIONS SHOWN ARE NOMINAL (IN MILLIMETERS), U.N.O.
2. WELD SIZESHALL BE AISC MINIMUM OF 6 mm UNLESS NOTED OTHERWISE.
3. ALL FIELD WELDS SHALL BE INSPECTED PER QUALITY ASSURANCE AND SPECIAL INSPECTIONS.

REFERENCE DRAWINGS

1	93M-BOA-NAT-LOT-04833
2	93M-BOA-NAT-LOT-09170
3	93M-BOA-NAT-LOT-01976
4	93M-BOA-NAT-LOT-20021
5	
6	
7	
8	
9	

6TH OF OCTOBER CITY RAIL TRANSIT MONORAIL

The Authority — Hill International Consultant — Main Contractor — Structural Designer

KEY PLAN:

REV.	DATE	DSG	CHK	APP	AMENDMENTS	STATUS
B	12/05/2023	M.KH	M.KH	DR.M.M	ISSUED FOR INFORMATION	IFI
A	11/20/2022	M.KH	M.KH	DR.M.M	ISSUED FOR INFORMATION	IFI

SCALE: AS SHOWN | SHOPDRAWING | DATE: 12/05/2023

DRAWING TITLE
6TH OF OCTOBER MONORAIL
SERVICE WALKWAYS
ZONE (1008)
W680

Project Code	Rubric	Initiator	Lot	Ref	Number	Revision
9 3 M	0 4 7 6	A C C	6 0	D E P	D W G	0 8 8 4 3	B

Tekla structures

approval is subject to approval of coordination package between multi-discipline

REVIEWED WITH COMMENT
MONORAILS PROJECT

All holes are 22mm U.N.O Length & Area & Weight per piece

Mark	Profile	Grade	QTY	Length	Area	Weight
W679	L60*6	S235JR	1	956.8	0.23	5.1

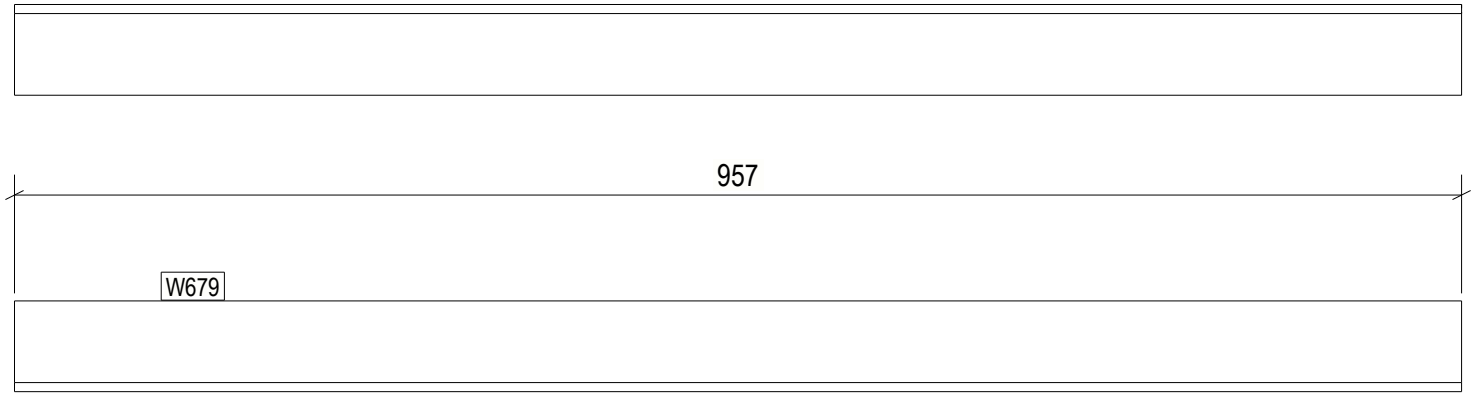

1 REQ'D AS DRAWN MK'D W679

6 October Monorail
Engineering Unit
Valid For Construction

Tekla structures

GENERAL NOTES:

1. THE DIMENSIONS SHOWN ARE NOMINAL (IN MILLIMETERS), U.N.O.
2. WELD SIZESHALL BE AISC MINIMUM OF 6 mm UNLESS NOTED OTHERWISE.
3. ALL FIELD WELDS SHALL BE INSPECTED PER QUALITY ASSURANCE AND SPECIAL INSPECTIONS.

REFERENCE DRAWINGS

1	93M-BOA-NAT-LOT-04833
2	93M-BOA-NAT-LOT-09170
3	93M-BOA-NAT-LOT-01976
4	93M-BOA-NAT-LOT-20021
5	
6	
7	
8	
9	

6TH OF OCTOBER CITY RAIL TRANSIT MONORAIL

The Authority — Hill International Consultant — Main Contractor — Structural Designer

KEY PLAN:

REV	DATE	DSG	CHK	APP	AMENDMENTS	STATUS
B	12/05/2023	M.KH	M.KH	DR.BIM	ISSUED FOR INFORMATION	IFI
A	11/20/2022	M.KH	M.KH	DR.BIM	ISSUED FOR INFORMATION	IFI

SCALE: AS SHOWN | SHOPDRAWING | DATE: 12/05/2023

DRAWING TITLE
6TH OF OCTOBER MONORAIL
SERVICE WALKWAYS
ZONE (1008)
W679

Project Code	Rubric	Initiator	Lot	Ref	Number	Revision
9 3 M	0 4 7 6	A C C	6 0 D	E P	D W G	0 8 8 4 4	B

approval is subject to approval of coordination package between multi-discipline

REVIEWED WITH COMMENT
MONORAILS PROJECT

All holes are 22mm U.N.O Length & Area & Weight per piece

Mark	Profile	Grade	QTY	Length	Area	Weight
W678	L60*6	S235JR	1	1823.7	0.44	9.8

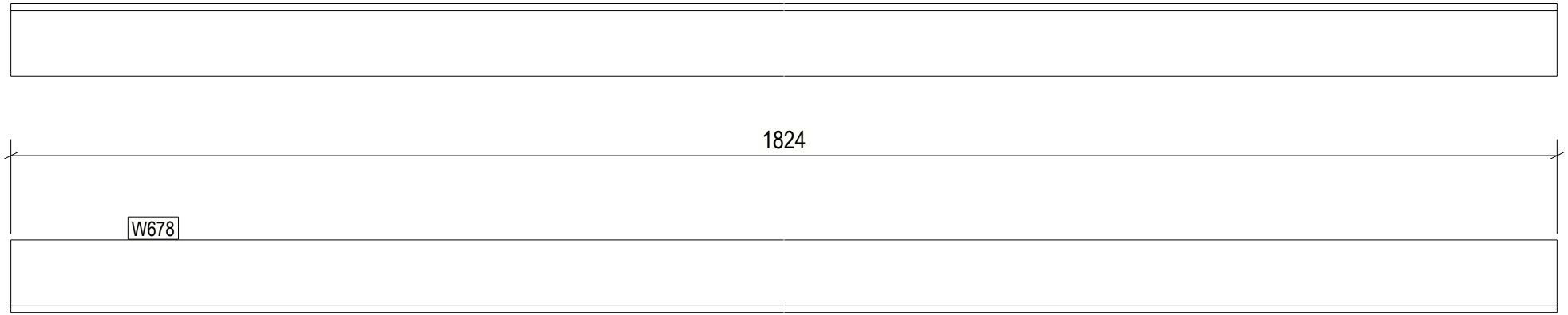

1 REQ'D AS DRAWN MK'D W678

6 October Monorail
Engineering Unit
Valid For Construction

GENERAL NOTES:

1. THE DIMENSIONS SHOWN ARE NOMINAL (IN MILLIMETERS), U.N.O.
2. WELD SIZESHALL BE AISC MINIMUM OF 6 mm UNLESS NOTED OTHERWISE.
3. ALL FIELD WELDS SHALL BE INSPECTED PER QUALITY ASSURANCE AND SPECIAL INSPECTIONS.

REFERENCE DRAWINGS

1	93M-BOA-NAT-LOT-04833
2	93M-BOA-NAT-LOT-09170
3	93M-BOA-NAT-LOT-01976
4	93M-BOA-NAT-LOT-20021
5	
6	
7	
8	
9	

6TH OF OCTOBER CITY RAIL TRANSIT MONORAIL

The Authority — Hill International Consultant — Main Contractor — Structural Designer

KEY PLAN:

REV.	DATE	DSG	CHK	APP	AMENDMENTS	STATUS
B	12/05/2023	M.KH	M.KH	DR.M.M	ISSUED FOR INFORMATION	IFI
A	11/20/2022	M.KH	M.KH	DR.M.M	ISSUED FOR INFORMATION	IFI

SCALE: AS SHOWN | SHOPDRAWING | DATE: 12/05/2023

DRAWING TITLE
6TH OF OCTOBER MONORAIL
SERVICE WALKWAYS
ZONE (1008)
W678

Project Code	Rubric	Initiator	Lot	Ref	Number	Revision
9 3 M	0 4 7 6	A C C	6 0 D	E P	D W G	0 8 8 4 5	B

Tekla structures

approval is subject to approval of coordination package between multi-discipline

REVIEWED WITH COMMENT
MONORAILS PROJECT

All holes are 22mm U.N.O Length & Area & Weight per piece

Mark	Profile	Grade	QTY	Length	Area	Weight
W677	L60*6	S235JR	3	1795.8	0.43	9.6

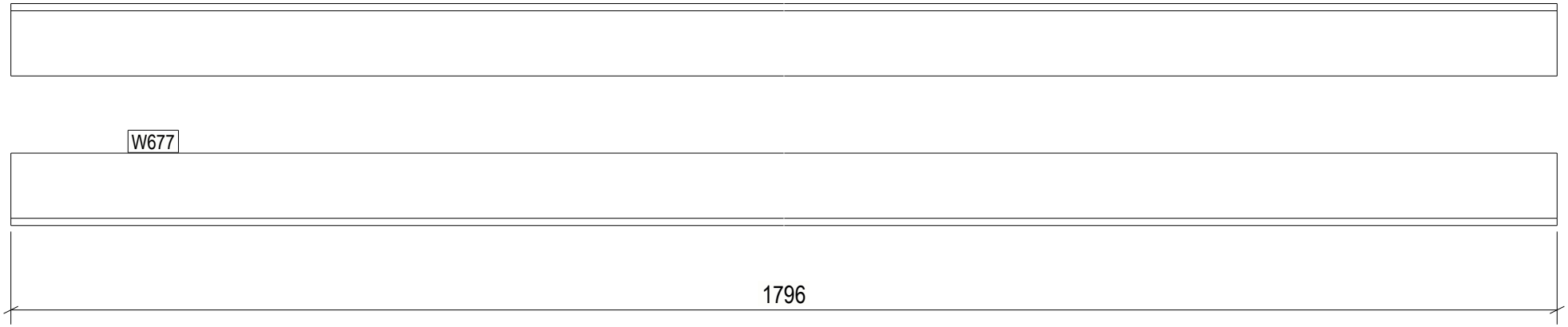

3 REQ'D AS DRAWN MK'D W677

6 October Monorail
Engineering Unit
Valid For Construction

GENERAL NOTES:

1. THE DIMENSIONS SHOWN ARE NOMINAL (IN MILLIMETERS), U.N.O.
2. WELD SIZESHALL BE AISC MINIMUM OF 6 mm UNLESS NOTED OTHERWISE.
3. ALL FIELD WELDS SHALL BE INSPECTED PER QUALITY ASSURANCE AND SPECIAL INSPECTIONS.

REFERENCE DRAWINGS

1	93M-BOA-NAT-LOT-04833
2	93M-BOA-NAT-LOT-09170
3	93M-BOA-NAT-LOT-01976
4	93M-BOA-NAT-LOT-20021
5	
6	
7	
8	
9	

6TH OF OCTOBER CITY RAIL TRANSIT MONORAIL

The Authority — Hill International Consultant — Main Contractor — Structural Designer

KEY PLAN:

SCALE	SHOPDRAWING	DATE
AS SHOWN		12/09/2023

REV	DATE	DSG	CHK	APP	AMENDMENTS	STATUS
B	12/05/2023	M.KH	M.KH	DR.BIM	ISSUED FOR INFORMATION	IFI
A	11/20/2022	M.KH	M.KH	DR.BIM	ISSUED FOR INFORMATION	IFI

DRAWING TITLE

6TH OF OCTOBER MONORAIL
SERVICE WALKWAYS
ZONE (1008)
W677

Project Code	Rubric	Initiator	Lot	Ref	Number	Revision
93M	047	ACC	60DEP	DWG	08461	B

Tekla structures

approval is subject to approval of coordination package between multi-discipline

REVIEWED WITH COMMENT
MONORAILS PROJECT

All holes are 22mm U.N.O Length & Area & Weight per piece

Mark	Profile	Grade	QTY	Length	Area	Weight
W676	L60*6	S235JR	2	898.1	0.22	4.8

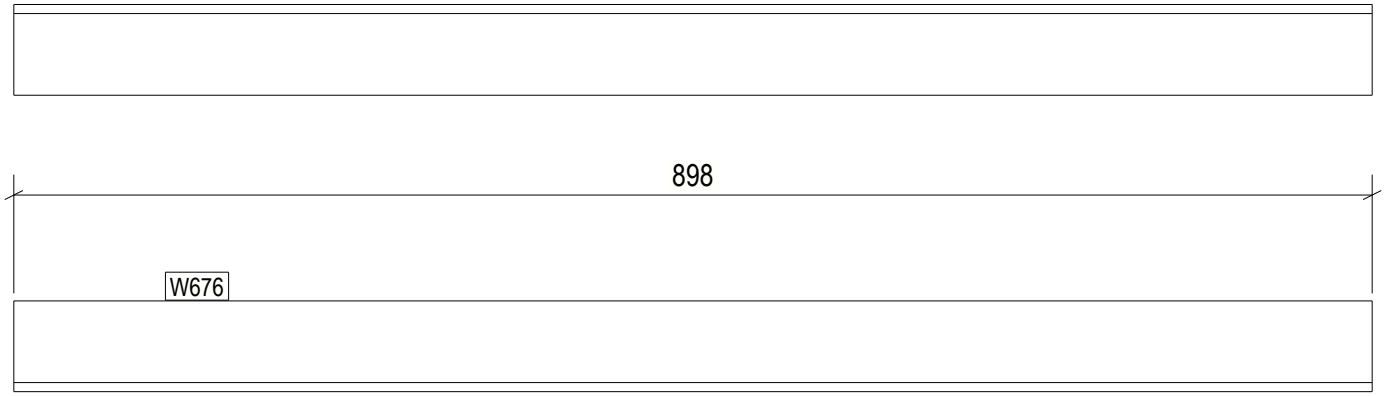

2 REQ'D AS DRAWN MK'D W676

6 October Monorail
Engineering Unit
Valid For Construction

GENERAL NOTES:

1. THE DIMENSIONS SHOWN ARE NOMINAL (IN MILLIMETERS), U.N.O.
2. WELD SIZESHALL BE AISC MINIMUM OF 6 mm UNLESS NOTED OTHERWISE.
3. ALL FIELD WELDS SHALL BE INSPECTED PER QUALITY ASSURANCE AND SPECIAL INSPECTIONS.

REFERENCE DRAWINGS

1	93M-BOA-NAT-LOT-04833
2	93M-BOA-NAT-LOT-09170
3	93M-BOA-NAT-LOT-01976
4	93M-BOA-NAT-LOT-20021
5	
6	
7	
8	
9	

6TH OF OCTOBER CITY RAIL TRANSIT MONORAIL

The Authority — Hill International Consultant — Main Contractor — Structural Designer

KEY PLAN:

REV.	DATE	DSG	CHK	APP	AMENDMENTS	STATUS
B	12/05/2023	M.KH	M.KH	DR.M.M	ISSUED FOR INFORMATION	IFI
A	11/20/2022	M.KH	M.KH	DR.M.M	ISSUED FOR INFORMATION	IFI

SCALE: AS SHOWN | SHOPDRAWING | DATE: 12/05/2023

DRAWING TITLE
6TH OF OCTOBER MONORAIL
SERVICE WALKWAYS
ZONE (1008)
W676

Project Code	Rubric	Initiator	Lot	Ref	Number	Revision
9 3 M	0 4 7 6	A C C	6 0 D E P	D W G	0 8 8 4 7	B

Tekla structures

approval is subject to approval of coordination package between multi-discipline

REVIEWED WITH COMMENT
MONORAILS PROJECT

All holes are 22mm U.N.O Length & Area & Weight per piece

Mark	Profile	Grade	QTY	Length	Area	Weight
W675	L60*6	S235JR	2	1810.8	0.44	9.7

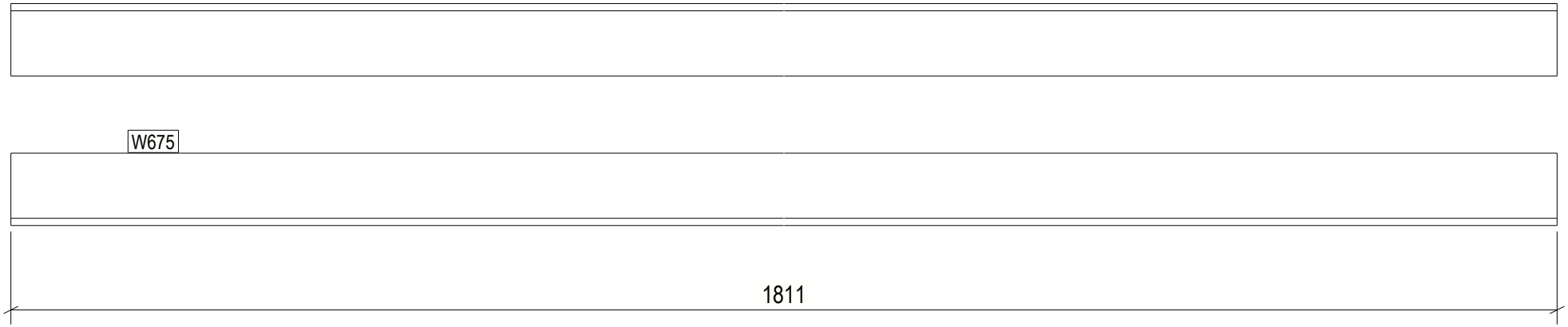

2 REQ'D AS DRAWN MK'D W675

6 October Monorail
Engineering Unit
Valid For Construction

GENERAL NOTES:

1. THE DIMENSIONS SHOWN ARE NOMINAL (IN MILLIMETERS), U.N.O.
2. WELD SIZESHALL BE AISC MINIMUM OF 6 mm UNLESS NOTED OTHERWISE.
3. ALL FIELD WELDS SHALL BE INSPECTED PER QUALITY ASSURANCE AND SPECIAL INSPECTIONS.

REFERENCE DRAWINGS

1	93M-BOA-NAT-LOT-04833
2	93M-BOA-NAT-LOT-09170
3	93M-BOA-NAT-LOT-01976
4	93M-BOA-NAT-LOT-20021
5	
6	
7	
8	
9	

6TH OF OCTOBER CITY RAIL TRANSIT MONORAIL

The Authority | Hill International Consultant | Main Contractor | Structural Designer

KEY PLAN:

REV.	DATE	DSG	CHK	APP	AMENDMENTS	STATUS
B	12/05/2023	M.KH	M.KH	DR.M.M	ISSUED FOR INFORMATION	IFI
A	11/20/2022	M.KH	M.KH	DR.M.M	ISSUED FOR INFORMATION	IFI

SCALE AS SHOWN | SHOPDRAWING | DATE 12/05/2023

DRAWING TITLE
6TH OF OCTOBER MONORAIL
SERVICE WALKWAYS
ZONE (1008)
W675

Project Code	Rubric	Initiator	Lot	Ref	Number	Revision
9 3 M	0 4 7 6	A C C	6 0	D E P	D W G	0 8 8 4 8	B

Tekla structures

approval is subject to approval of coordination package between multi-discipline

REVIEWED WITH COMMENT
MONORAILS PROJECT

All holes are 22mm U.N.O Length & Area & Weight per piece

Mark	Profile	Grade	QTY	Length	Area	Weight
W674	L60*6	S235JR	2	942.1	0.23	5.1

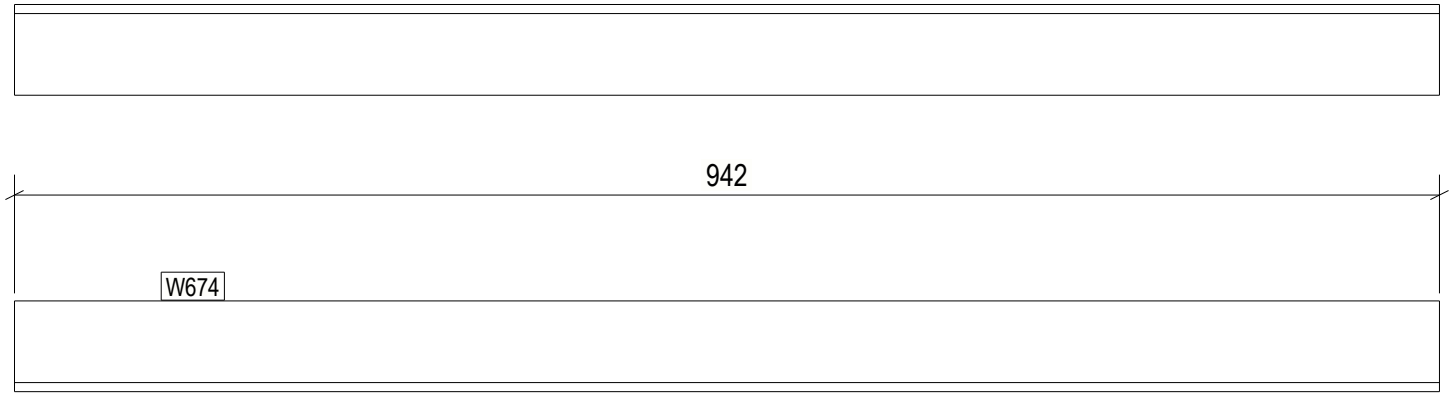

2 REQ'D AS DRAWN MK'D W674

6 October Monorail
Engineering Unit
Valid For Construction

GENERAL NOTES:

1. THE DIMENSIONS SHOWN ARE NOMINAL (IN MILLIMETERS), U.N.O.
2. WELD SIZESHALL BE AISC MINIMUM OF 6 mm UNLESS NOTED OTHERWISE.
3. ALL FIELD WELDS SHALL BE INSPECTED PER QUALITY ASSURANCE AND SPECIAL INSPECTIONS.

REFERENCE DRAWINGS

1	93M-BOA-NAT-LOT-04833
2	93M-BOA-NAT-LOT-09170
3	93M-BOA-NAT-LOT-01976
4	93M-BOA-NAT-LOT-20021
5	
6	
7	
8	
9	

6TH OF OCTOBER CITY RAIL TRANSIT MONORAIL

The Authority — Hill International Consultant — Main Contractor — Structural Designer

KEY PLAN:

REV.	DATE	DSG	CHK	APP	AMENDMENTS	STATUS
B	12/05/2023	M.KH	M.KH	DR.BIM	ISSUED FOR INFORMATION	IFI
A	11/20/2022	M.KH	M.KH	DR.BIM	ISSUED FOR INFORMATION	IFI

SCALE: AS SHOWN | SHOPDRAWING | DATE: 12/05/2023

DRAWING TITLE

6TH OF OCTOBER MONORAIL
SERVICE WALKWAYS
ZONE (1008)
W674

Project Code	Rubric	Initiator	Lot	Ref	Number	Revision
9 3 M	0 4 7 6	A C C	6 0 D	E P D	W G 0	8 8 4 9 B

Tekla structures

approval is subject to approval of coordination package between multi-discipline

REVIEWED WITH COMMENT
MONORAILS PROJECT

All holes are 22mm U.N.O Length & Area & Weight per piece

Mark	Profile	Grade	QTY	Length	Area	Weight
W673	L60*6	S235JR	2	1911.2	0.46	10.3

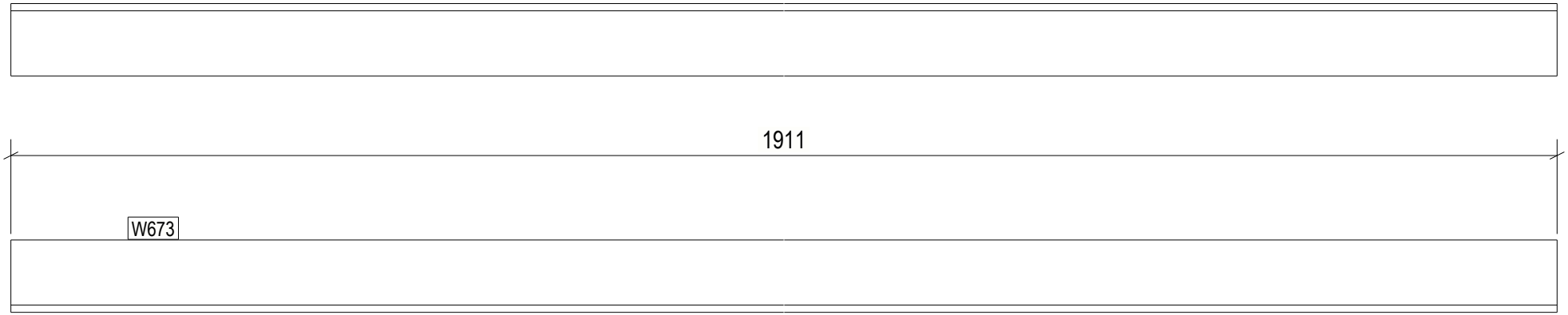

2 REQ'D AS DRAWN MK'D W673

6 October Monorail
Engineering Unit
Valid For Construction

GENERAL NOTES:

1. THE DIMENSIONS SHOWN ARE NOMINAL (IN MILLIMETERS), U.N.O.
2. WELD SIZESHALL BE AISC MINIMUM OF 6 mm UNLESS NOTED OTHERWISE.
3. ALL FIELD WELDS SHALL BE INSPECTED PER QUALITY ASSURANCE AND SPECIAL INSPECTIONS.

REFERENCE DRAWINGS

1	93M-BOA-NAT-LOT-04833
2	93M-BOA-NAT-LOT-09170
3	93M-BOA-NAT-LOT-01976
4	93M-BOA-NAT-LOT-20021
5	
6	
7	
8	
9	

6TH OF OCTOBER CITY RAIL TRANSIT MONORAIL

The Authority — Hill International Consultant — Main Contractor — Structural Designer

KEY PLAN:

REV.	DATE	DSG	CHK	APP	AMENDMENTS	STATUS
B	12/05/2023	M.KH	M.KH	DR.M.M	ISSUED FOR INFORMATION	IFI
A	11/20/2022	M.KH	M.KH	DR.M.M	ISSUED FOR INFORMATION	IFI

SCALE: AS SHOWN | SHOPDRAWING | DATE: 12/05/2023

DRAWING TITLE
6TH OF OCTOBER MONORAIL
SERVICE WALKWAYS
ZONE (1008)
W673

Project Code	Rubric	Initiator	Lot	Ref	Number	Revision
9 3 M	0 4 7 6	A C C	6 0 D	E P	D W G	0 8 8 5 0	B

Tekla structures

approval is subject to approval of coordination package between multi-discipline

REVIEWED WITH COMMENT
MONORAILS PROJECT

All holes are 22mm U.N.O Length & Area & Weight per piece

Mark	Profile	Grade	QTY	Length	Area	Weight
W672	L60*6	S235JR	2	878.9	0.21	4.7

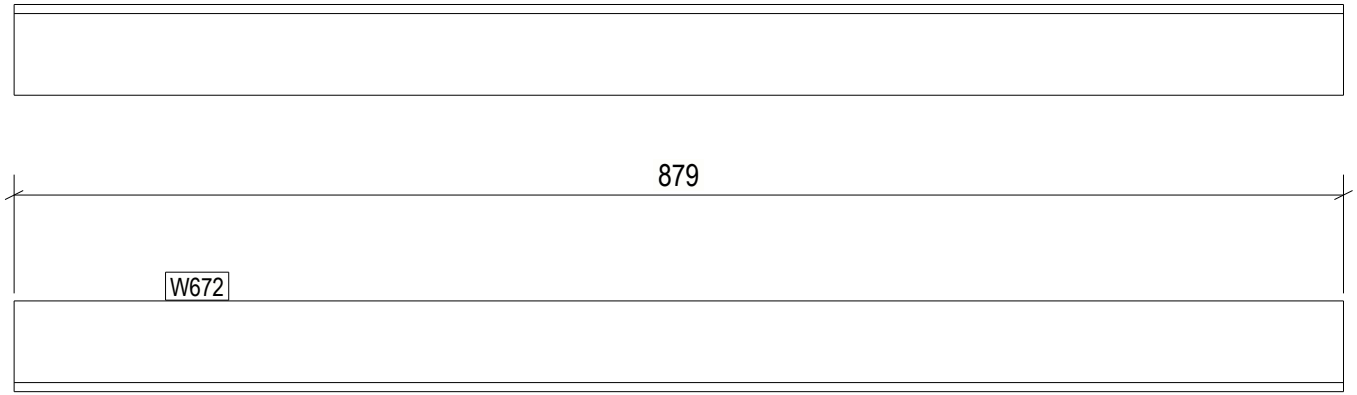

2 REQ'D AS DRAWN MK'D W672

6 October Monorail
Engineering Unit
Valid For Construction

GENERAL NOTES:

1. THE DIMENSIONS SHOWN ARE NOMINAL (IN MILLIMETERS), U.N.O.
2. WELD SIZESHALL BE AISC MINIMUM OF 6 mm UNLESS NOTED OTHERWISE.
3. ALL FIELD WELDS SHALL BE INSPECTED PER QUALITY ASSURANCE AND SPECIAL INSPECTIONS.

REFERENCE DRAWINGS

1	93M-BOA-NAT-LOT-04833
2	93M-BOA-NAT-LOT-09170
3	93M-BOA-NAT-LOT-01976
4	93M-BOA-NAT-LOT-20021
5	
6	
7	
8	
9	

6TH OF OCTOBER CITY RAIL TRANSIT MONORAIL

The Authority — Hill International Consultant — Main Contractor — Structural Designer

KEY PLAN:

REV.	DATE	DSG	CHK	APP	AMENDMENTS	STATUS
B	12/05/2023	M.KH	M.KH	DR.BIM	ISSUED FOR INFORMATION	IFI
A	11/20/2022	M.KH	M.KH	DR.BIM	ISSUED FOR INFORMATION	IFI

SCALE: AS SHOWN | SHOPDRAWING | DATE: 12/05/2023

DRAWING TITLE

6TH OF OCTOBER MONORAIL
SERVICE WALKWAYS
ZONE (1008)
W672

Project Code	Rubric	Initiator	Lot	Ref	Number	Revision
9 3 M	0 4 7 6	A C C	6 0 D E	P D W	G 0 8	8 5 1 B

Tekla structures

approval is subject to approval of coordination package between multi-discipline

REVIEWED WITH COMMENT
MONORAILS PROJECT

All holes are 22mm U.N.O Length & Area & Weight per piece

Mark	Profile	Grade	QTY	Length	Area	Weight
W671	L60*6	S235JR	2	1004.4	0.24	5.3

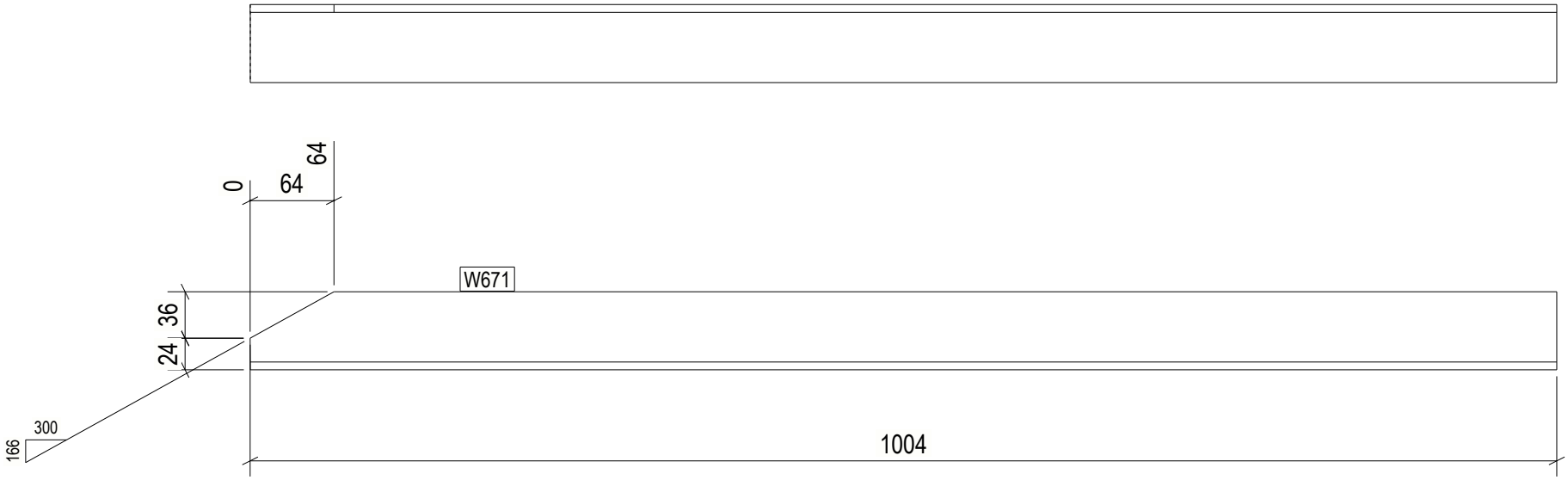

2 REQ'D AS DRAWN MK'D W671

6 October Monorail
Engineering Unit
Valid For Construction

GENERAL NOTES:

1. THE DIMENSIONS SHOWN ARE NOMINAL (IN MILLIMETERS), U.N.O.
2. WELD SIZESHALL BE AISC MINIMUM OF 6 mm UNLESS NOTED OTHERWISE.
3. ALL FIELD WELDS SHALL BE INSPECTED PER QUALITY ASSURANCE AND SPECIAL INSPECTIONS.

REFERENCE DRAWINGS

1	93M-BOA-NAT-LOT-04833
2	93M-BOA-NAT-LOT-09170
3	93M-BOA-NAT-LOT-01976
4	93M-BOA-NAT-LOT-20021
5	
6	
7	
8	
9	

6TH OF OCTOBER CITY RAIL TRANSIT MONORAIL

The Authority — Hill International Consultant — Main Contractor — Structural Designer

KEY PLAN:

SCALE	SHOPDRAWING	DATE
AS SHOWN		12/09/2023

REV	DATE	DSG	CHK	APP	AMENDMENTS	STATUS
B	12/05/2023	M.KH	M.KH	DR.M.M	ISSUED FOR INFORMATION	IFI
A	11/20/2022	M.KH	M.KH	DR.M.M	ISSUED FOR INFORMATION	IFI

DRAWING TITLE

6TH OF OCTOBER MONORAIL
SERVICE WALKWAYS
ZONE (1008)
W671

Project Code	Rubric	Initiator	Lot	Ref	Number	Revision
93M	047	ACC	60	DEP	DWG	0885	2	B

Tekla structures

approval is subject to approval of coordination package between multi-discipline

REVIEWED WITH COMMENT
MONORAILS PROJECT

All holes are 22mm U.N.O Length & Area & Weight per piece

Mark	Profile	Grade	QTY	Length	Area	Weight
W670	L60*6	S235JR	2	1784.3	0.43	9.6

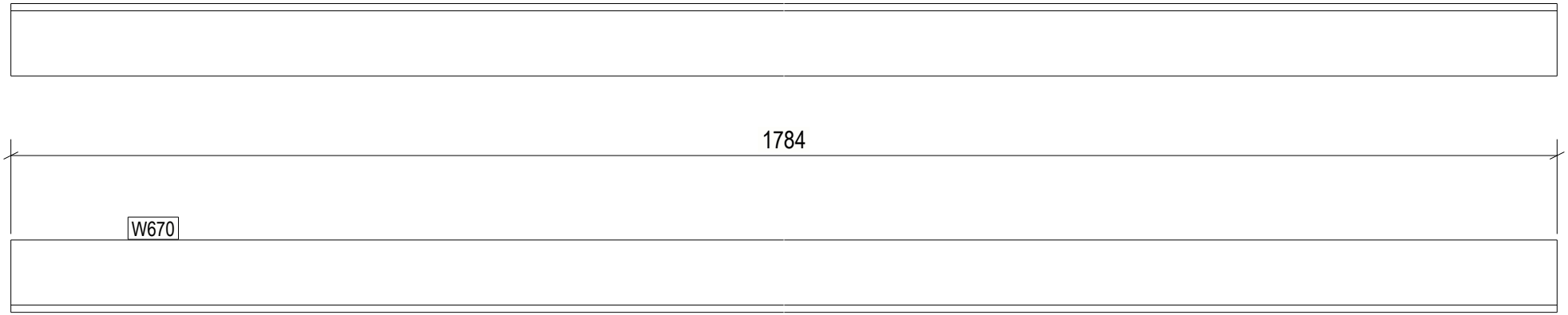

2 REQ'D AS DRAWN MK'D W670

6 October Monorail
Engineering Unit
Valid For Construction

GENERAL NOTES:

1. THE DIMENSIONS SHOWN ARE NOMINAL (IN MILLIMETERS), U.N.O.
2. WELD SIZESHALL BE AISC MINIMUM OF 6 mm UNLESS NOTED OTHERWISE.
3. ALL FIELD WELDS SHALL BE INSPECTED PER QUALITY ASSURANCE AND SPECIAL INSPECTIONS.

REFERENCE DRAWINGS

1	93M-BOA-NAT-LOT-04833
2	93M-BOA-NAT-LOT-09170
3	93M-BOA-NAT-LOT-01976
4	93M-BOA-NAT-LOT-20021
5	
6	
7	
8	
9	

6TH OF OCTOBER CITY RAIL TRANSIT MONORAIL

The Authority — Hill International Consultant — Main Contractor — Structural Designer

KEY PLAN:

REV.	DATE	DSG	CHK	APP	AMENDMENTS	STATUS
B	12/05/2023	M.KH	M.KH	DR.M.M	ISSUED FOR INFORMATION	IFI
A	11/20/2022	M.KH	M.KH	DR.M.M	ISSUED FOR INFORMATION	IFI

SCALE: AS SHOWN | SHOPDRAWING | DATE: 12/05/2023

DRAWING TITLE
6TH OF OCTOBER MONORAIL
SERVICE WALKWAYS
ZONE (1008)
W670

Project Code	Rubric	Initiator	Lot	Ref	Number	Revision
9 3 M	0 4 7 6	A C C	6 0 D	E P	D W G	0 8 8 5 3	B

Tekla structures

approval is subject to approval of coordination package between multi-discipline

REVIEWED WITH COMMENT
MONORAILS PROJECT

All holes are 22mm U.N.O Length & Area & Weight per piece

Mark	Profile	Grade	QTY	Length	Area	Weight
W669	L60*6	S235JR	4	1028.2	0.25	5.5

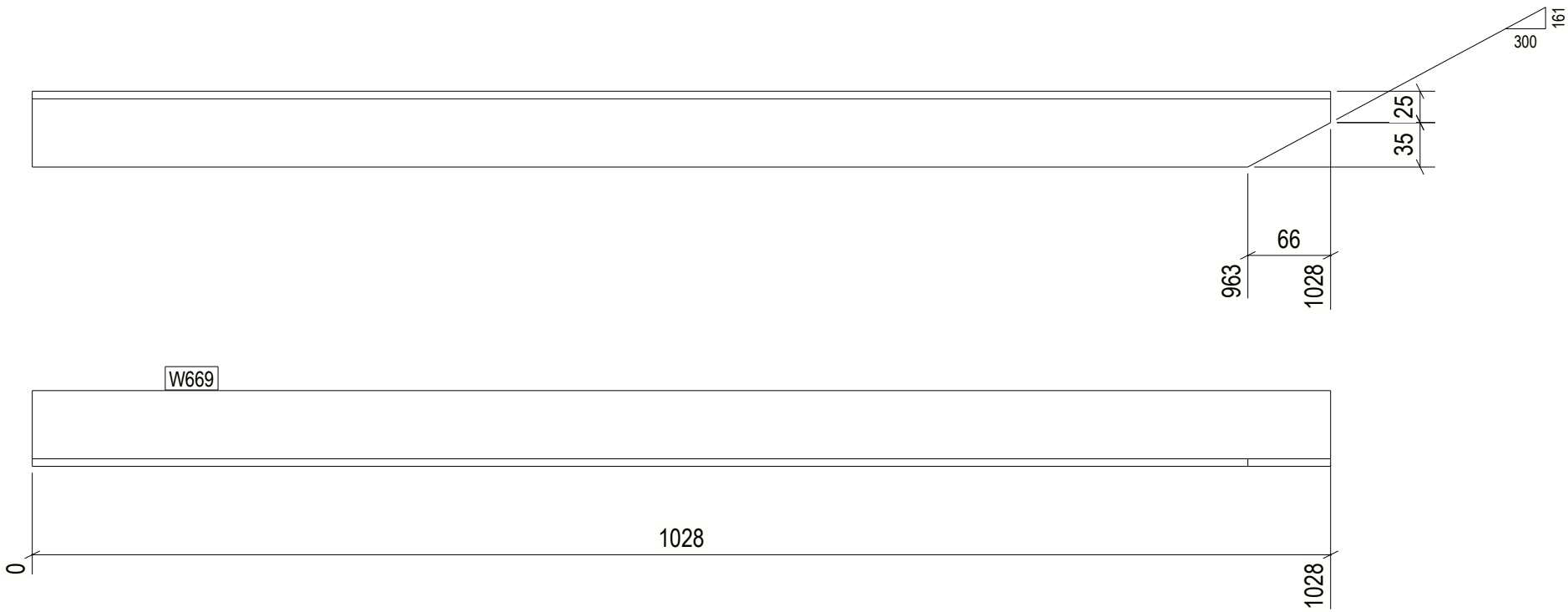

4 REQ'D AS DRAWN MK'D W669

6 October Monorail
Engineering Unit
Valid For Construction

GENERAL NOTES:

1. THE DIMENSIONS SHOWN ARE NOMINAL (IN MILLIMETERS), U.N.O.
2. WELD SIZESHALL BE AISC MINIMUM OF 6 mm UNLESS NOTED OTHERWISE.
3. ALL FIELD WELDS SHALL BE INSPECTED PER QUALITY ASSURANCE AND SPECIAL INSPECTIONS.

REFERENCE DRAWINGS

1	93M-BOA-NAT-LOT-04833
2	93M-BOA-NAT-LOT-09170
3	93M-BOA-NAT-LOT-01976
4	93M-BOA-NAT-LOT-20021
5	
6	
7	
8	
9	

6TH OF OCTOBER CITY RAIL TRANSIT MONORAIL

The Authority — Hill International Consultant — Main Contractor — Structural Designer

KEY PLAN:

REV.	DATE	DSG	CHK	APP	AMENDMENTS	STATUS
B	12/05/2023	M.KH	M.KH	DR.BUM	ISSUED FOR INFORMATION	IFI
A	11/20/2022	M.KH	M.KH	DR.BUM	ISSUED FOR INFORMATION	IFI

SCALE: AS SHOWN | SHOPDRAWING | DATE: 12/05/2023

DRAWING TITLE
6TH OF OCTOBER MONORAIL
SERVICE WALKWAYS
ZONE (1008)
W669

Project Code	Rubric	Initiator	Lot	Ref	Number	Revision
9 3 M	0 4 7 6	A C C	6 0 D	E P	D W G	0 8 8 5 4	B

Tekla structures

approval is subject to approval of coordination package between multi-discipline

REVIEWED WITH COMMENT MONORAILS PROJECT

All holes are 22mm U.N.O Length & Area & Weight per piece						
W668	L60*6	S235JR	2	903.1	0.22	4.8
Mark	Profile	Grade	QTY	Length	Area	Weight

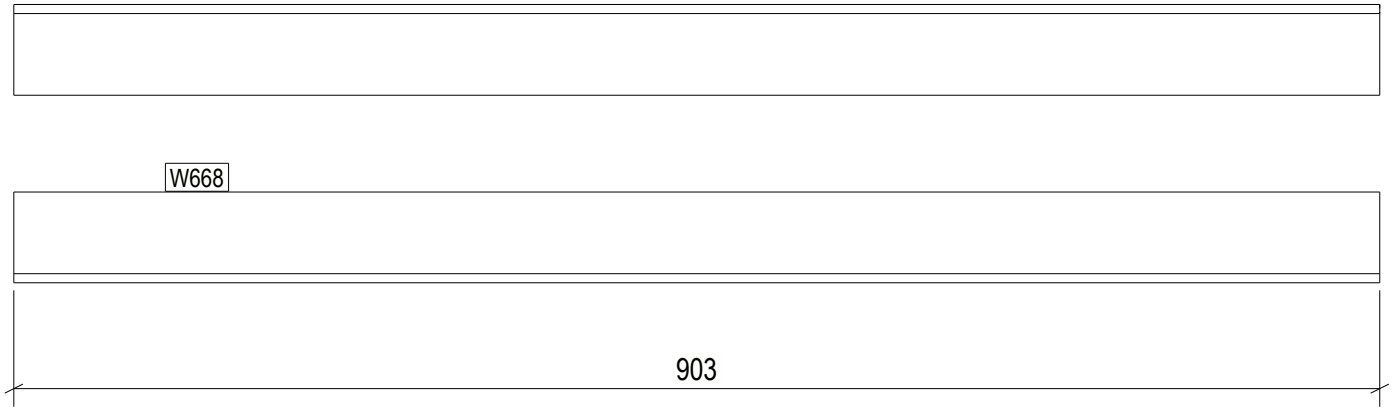

2 REQ'D AS DRAWN MK'D W668

6 October Monorail Engineering Unit
Valid For Construction

GENERAL NOTES:

1. THE DIMENSIONS SHOWN ARE NOMINAL (IN MILLIMETERS), U.N.O.
2. WELD SIZESHALL BE AISC MINIMUM OF 6 mm UNLESS NOTED OTHERWISE.
3. ALL FIELD WELDS SHALL BE INSPECTED PER QUALITY ASSURANCE AND SPECIAL INSPECTIONS.

REFERENCE DRAWINGS

1	93M-BOA-NAT-LOT-04833
2	93M-BOA-NAT-LOT-09170
3	93M-BOA-NAT-LOT-01976
4	93M-BOA-NAT-LOT-20021
5	
6	
7	
8	
9	

6TH OF OCTOBER CITY RAIL TRANSIT MONORAIL

The Authority | Hill International Consultant | Main Contractor | Structural Designer

KEY PLAN:

SCALE	SHOPDRAWING	DATE
AS SHOWN		12/05/2023

REV	DATE	DSG	CHK	APP	AMENDMENTS	STATUS
B	12/05/2023	M.KH	M.KH	DR.M.M	ISSUED FOR INFORMATION	IFI
A	11/20/2022	M.KH	M.KH	DR.M.M	ISSUED FOR INFORMATION	IFI

DRAWING TITLE

6TH OF OCTOBER MONORAIL SERVICE WALKWAYS ZONE (1008)
W668

Project Code	Rubric	Initiator	Lot	Ref	Number	Revision
93M	0476	ACC	60DEP	DWG	08855	B

Tekla structures

approval is subject to approval of coordination package between multi-discipline

REVIEWED WITH COMMENT
MONORAILS PROJECT

All holes are 22mm U.N.O Length & Area & Weight per piece

Mark	Profile	Grade	QTY	Length	Area	Weight
W667	L60*6	S235JR	6	1000.0	0.24	5.4

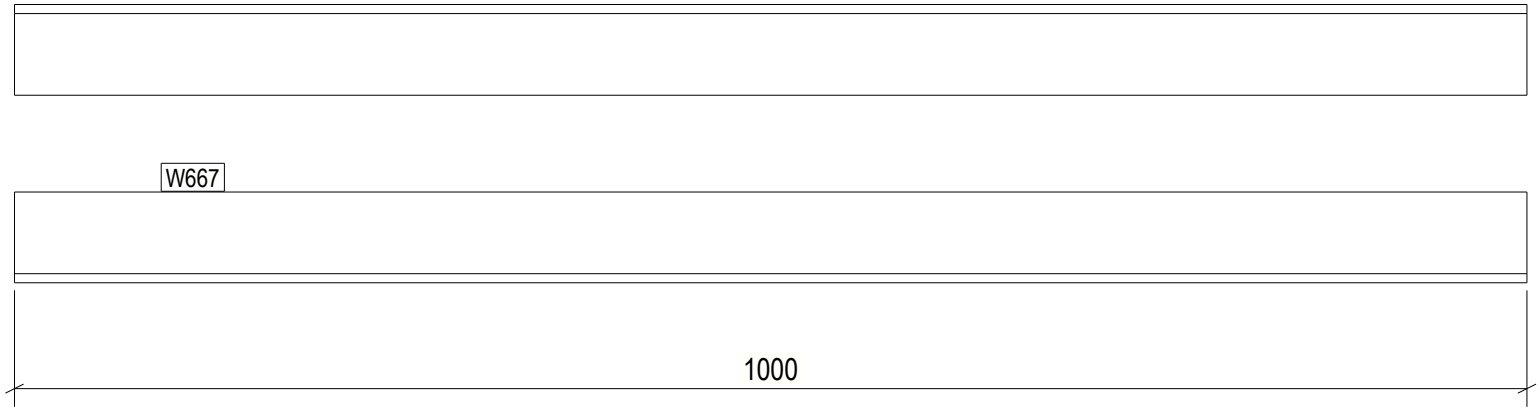

6 REQ'D AS DRAWN MK'D W667

6 October Monorail
Engineering Unit
Valid For Construction

GENERAL NOTES:

1. THE DIMENSIONS SHOWN ARE NOMINAL (IN MILLIMETERS), U.N.O.
2. WELD SIZESHALL BE AISC MINIMUM OF 6 mm UNLESS NOTED OTHERWISE.
3. ALL FIELD WELDS SHALL BE INSPECTED PER QUALITY ASSURANCE AND SPECIAL INSPECTIONS.

REFERENCE DRAWINGS

1	93M-BOA-NAT-LOT-04833
2	93M-BOA-NAT-LOT-09170
3	93M-BOA-NAT-LOT-01976
4	93M-BOA-NAT-LOT-20021
5	
6	
7	
8	
9	

6TH OF OCTOBER CITY RAIL TRANSIT MONORAIL

The Authority — Hill International Consultant — Main Contractor — Structural Designer

KEY PLAN:

REV.	DATE	DSG	CHK	APP	AMENDMENTS	STATUS
B	12/05/2023	M.KH	M.KH	DR.BM	ISSUED FOR INFORMATION	IFI
A	11/20/2022	M.KH	M.KH	DR.BM	ISSUED FOR INFORMATION	IFI

SCALE: AS SHOWN | SHOPDRAWING | DATE: 12/05/2023

DRAWING TITLE
6TH OF OCTOBER MONORAIL
SERVICE WALKWAYS
ZONE (1008)
W667

Project Code	Rubric	Initiator	Lot	Ref	Number	Revision
9 3 M	0 4 7 6	A C C	6 0 D	E P	D W G	0 8 8 5 6	B

Tekla structures

approval is subject to approval of coordination package between multi-discipline

REVIEWED WITH COMMENT
MONORAILS PROJECT

All holes are 22mm U.N.O Length & Area & Weight per piece

Mark	Profile	Grade	QTY	Length	Area	Weight
W666	L70*7	S235JR	1	965.5	0.27	7.1

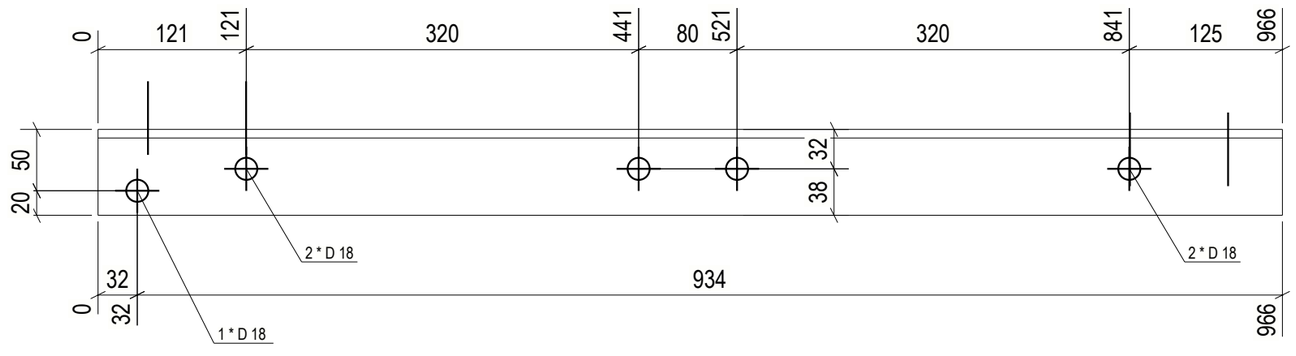

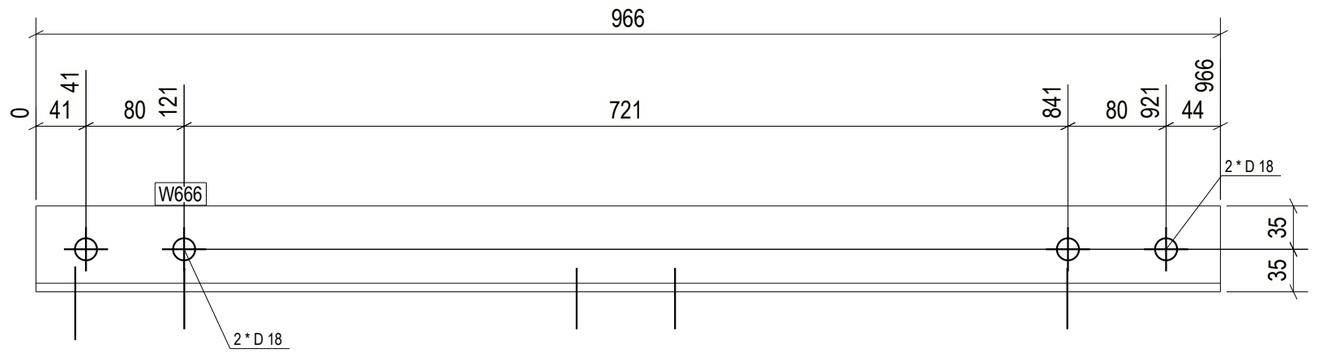

1 REQ'D AS DRAWN MK'D W666

6 October Monorail Engineering Unit Valid For Construction

GENERAL NOTES:

1. THE DIMENSIONS SHOWN ARE NOMINAL (IN MILLIMETERS), U.N.O.
2. WELD SIZESHALL BE AISC MINIMUM OF 6 mm UNLESS NOTED OTHERWISE.
3. ALL FIELD WELDS SHALL BE INSPECTED PER QUALITY ASSURANCE AND SPECIAL INSPECTIONS.

REFERENCE DRAWINGS

1	93M-BOA-NAT-LOT-04833
2	93M-BOA-NAT-LOT-09170
3	93M-BOA-NAT-LOT-01976
4	93M-BOA-NAT-LOT-20021
5	
6	
7	
8	
9	

6TH OF OCTOBER CITY RAIL TRANSIT MONORAIL

The Authority | Hill International Consultant | ORASCOM BOMBARDIER Main Contractor | INNOVA Structural Designer

KEY PLAN:

REV	DATE	DSN	CHK	APP	AMENDMENTS/STATUS
B	12/05/2023	M.KH	M.KH	DR.M.M	ISSUED FOR INFORMATION IFI
A	11/04/2023	M.KH	M.KH	DR.M.M	ISSUED FOR INFORMATION IFI

SCALE: AS SHOWN
SHOP DRAWING
DATE: 12/05/2023

DRAWING TITLE
6TH OF OCTOBER MONORAIL
SERVICE WALKWAYS
ZONE (1008)
W666

Project Code	Rubric	Initiator	Lot	Ref	Number	Revision
9 3 M	0 4 7 6	A C C	6 0 D E P	D W G	0 8 8 5 7	B

Tekla structures

approval is subject to approval of coordination package between multi-discipline

REVIEWED WITH COMMENT
MONORAILS PROJECT

All holes are 22mm U.N.O Length & Area & Weight per piece

Mark	Profile	Grade	QTY	Length	Area	Weight
W665	L70*7	S235JR	1	965.5	0.27	7.1

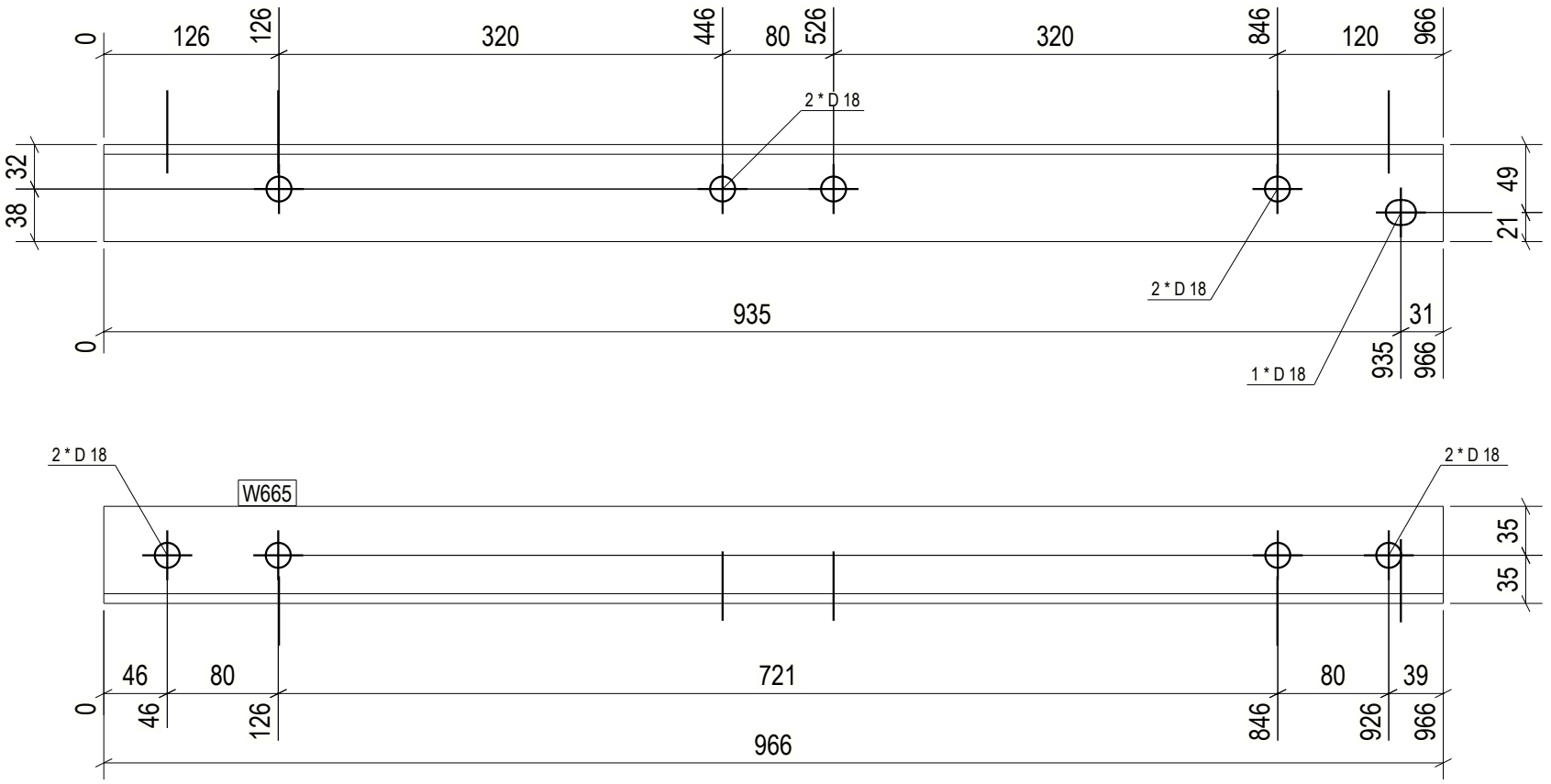

1 REQ'D AS DRAWN MK'D W665

6 October Monorail
Engineering Unit
Valid For Construction

GENERAL NOTES:

1. THE DIMENSIONS SHOWN ARE NOMINAL (IN MILLIMETERS), U.N.O.
2. WELD SIZESHALL BE AISC MINIMUM OF 6 mm UNLESS NOTED OTHERWISE.
3. ALL FIELD WELDS SHALL BE INSPECTED PER QUALITY ASSURANCE AND SPECIAL INSPECTIONS.

REFERENCE DRAWINGS

1	93M-BOA-NAT-LOT-04833
2	93M-BOA-NAT-LOT-09170
3	93M-BOA-NAT-LOT-01976
4	93M-BOA-NAT-LOT-20021
5	
6	
7	
8	
9	

6TH OF OCTOBER CITY RAIL TRANSIT MONORAIL

The Authority | Hill International Consultant | Main Contractor | Structural Designer

KEY PLAN:

REV.	DATE	DSG	CHK	APP	AMENDMENTS	STATUS
B	12/05/2023	M.KH	M.KH	DR.BIM	ISSUED FOR INFORMATION	IFI
A	11/20/2022	M.KH	M.KH	DR.BIM	ISSUED FOR INFORMATION	IFI

SCALE: AS SHOWN | SHOPDRAWING | DATE: 12/05/2023

DRAWING TITLE
6TH OF OCTOBER MONORAIL
SERVICE WALKWAYS
ZONE (1008)
W665

Project Code	Rubric	Initiator	Lot	Ref	Number	Revision
9 3 M	0 4 7 6	A C C	6 0	D E P	D W G	0 8 8 5 8	B

Tekla structures

approval is subject to approval of coordination package between multi-discipline

REVIEWED WITH COMMENT
MONORAILS PROJECT

All holes are 22mm U.N.O Length & Area & Weight per piece

Mark	Profile	Grade	QTY	Length	Area	Weight
W664	L70*7	S235JR	1	1421.3	0.40	10.4

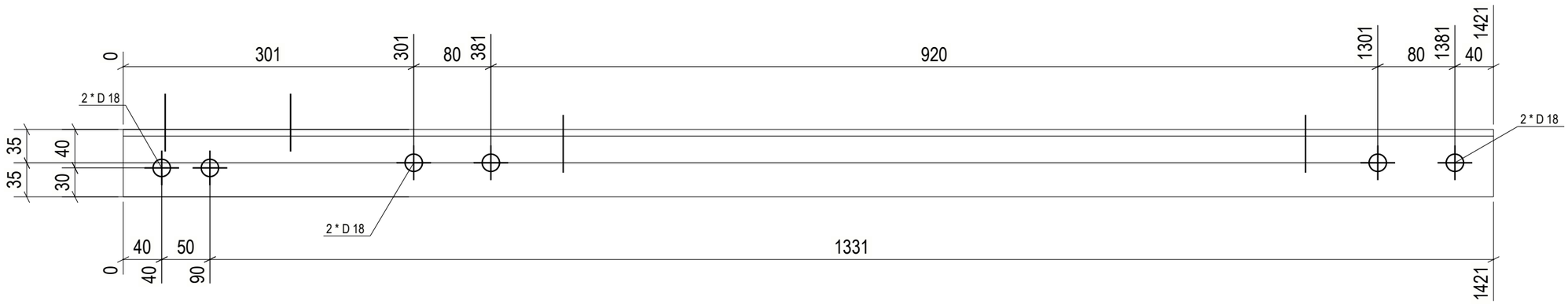

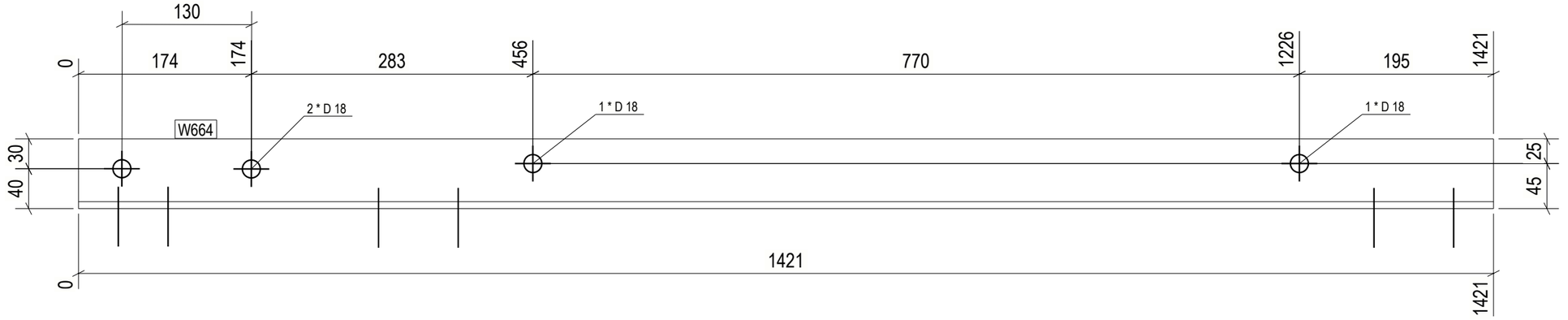

1 REQ'D AS DRAWN MK'D W664

6 October Monorail
Engineering Unit
Valid For Construction

GENERAL NOTES:

1. THE DIMENSIONS SHOWN ARE NOMINAL (IN MILLIMETERS), U.N.O.
2. WELD SIZESHALL BE AISC MINIMUM OF 6 mm UNLESS NOTED OTHERWISE.
3. ALL FIELD WELDS SHALL BE INSPECTED PER QUALITY ASSURANCE AND SPECIAL INSPECTIONS.

REFERENCE DRAWINGS

1	93M-BOA-NAT-LOT-04833
2	93M-BOA-NAT-LOT-09170
3	93M-BOA-NAT-LOT-01976
4	93M-BOA-NAT-LOT-20021
5	
6	
7	
8	
9	

6TH OF OCTOBER CITY RAIL TRANSIT MONORAIL

The Authority | Consultant: Hill International | Main Contractor: ORASCOM CONSTRUCTION, BOMBARDIER | Structural Designer: INNOVA TRANSPORTATION

KEY PLAN:

SCALE: AS SHOWN | SHOP DRAWING | DATE: 12/05/2023

REV	DATE	DWN	CHK	APP	AMENDMENTS	STATUS
B	12/05/2023	M.KH	M.KH	DR.M.M	ISSUED FOR INFORMATION	IFI

DRAWING TITLE
6TH OF OCTOBER MONORAIL
SERVICE WALKWAYS
ZONE (1008)
W664

Project Code	Rubric	Initiator	Lot	Ref	Number	Revision
9 3 M	0 4 7 6	A C C	6 0 D E P	D W G	0 8 8 5 9	B

Tekla structures

approval is subject to approval of coordination package between multi-discipline

REVIEWED WITH COMMENT
MONORAILS PROJECT

All holes are 22mm U.N.O Length & Area & Weight per piece

Mark	Profile	Grade	QTY	Length	Area	Weight
W663	CHS48.3*4.0	S235JR	1	298.6	0.04	1.3

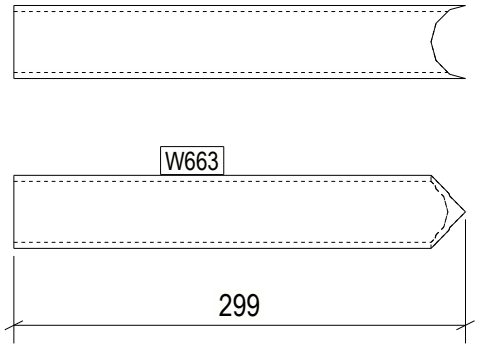

1 REQ'D AS DRAWN MK'D W663

6 October Monorail
Engineering Unit
Valid For Construction

GENERAL NOTES:

1. THE DIMENSIONS SHOWN ARE NOMINAL (IN MILLIMETERS), U.N.O.
2. WELD SIZESHALL BE AISC MINIMUM OF 6 mm UNLESS NOTED OTHERWISE.
3. ALL FIELD WELDS SHALL BE INSPECTED PER QUALITY ASSURANCE AND SPECIAL INSPECTIONS.

REFERENCE DRAWINGS

1	93M-BOA-NAT-LOT-04833
2	93M-BOA-NAT-LOT-09170
3	93M-BOA-NAT-LOT-01976
4	93M-BOA-NAT-LOT-20021
5	
6	
7	
8	
9	

6TH OF OCTOBER CITY RAIL TRANSIT MONORAIL

The Authority | Hill International Consultant | Main Contractor | Structural Designer

KEY PLAN:

REV.	DATE	DSG	CHK	APP	AMENDMENTS	STATUS
B	12/05/2023	M.KH	M.KH	DR.M.M	ISSUED FOR INFORMATION	IFI
A	11/20/2022	M.KH	M.KH	DR.M.M	ISSUED FOR INFORMATION	IFI

SCALE: AS SHOWN | SHOPDRAWING | DATE: 12/05/2023

DRAWING TITLE
6TH OF OCTOBER MONORAIL
SERVICE WALKWAYS
ZONE (1008)
W663

Project Code	Rubric	Initiator	Lot	Ref	Number	Revision
9 3 M 0 4 7 6	A C C	6 0 D E P	D W G	0 8	8 6 0	B

Tekla structures

approval is subject to approval of coordination package between multi-discipline

REVIEWED WITH COMMENT
MONORAILS PROJECT

All holes are 22mm U.N.O Length & Area & Weight per piece

Mark	Profile	Grade	QTY	Length	Area	Weight
W662	CHS48.3*4.0	S235JR	1	693.4	0.10	3.0

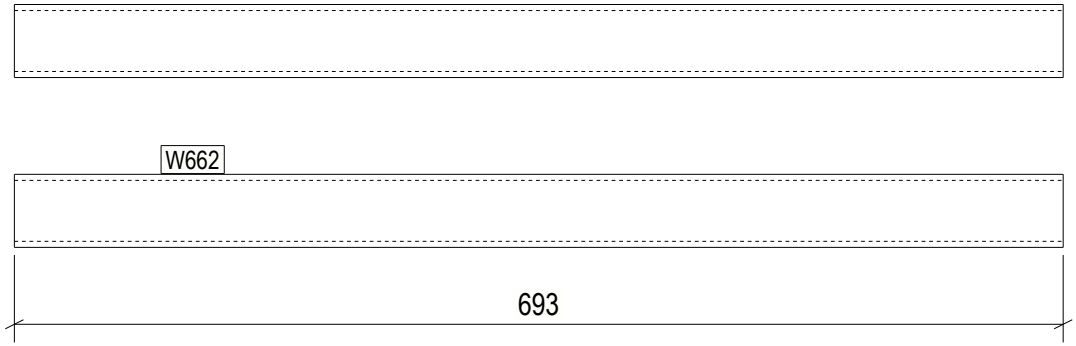

1 REQ'D AS DRAWN MK'D W662

6 October Monorail
Engineering Unit
Valid For Construction

GENERAL NOTES:

1. THE DIMENSIONS SHOWN ARE NOMINAL (IN MILLIMETERS), U.N.O.
2. WELD SIZESHALL BE AISC MINIMUM OF 6 mm UNLESS NOTED OTHERWISE.
3. ALL FIELD WELDS SHALL BE INSPECTED PER QUALITY ASSURANCE AND SPECIAL INSPECTIONS.

REFERENCE DRAWINGS

1	93M-BOA-NAT-LOT-04833
2	93M-BOA-NAT-LOT-09170
3	93M-BOA-NAT-LOT-01976
4	93M-BOA-NAT-LOT-20021
5	
6	
7	
8	
9	

6TH OF OCTOBER CITY RAIL TRANSIT MONORAIL

The Authority — Hill International Consultant — Main Contractor — Structural Designer

KEY PLAN:

REV.	DATE	DSG	CHK	APP	AMENDMENTS	STATUS
B	12/05/2023	M.KH	M.KH	DR.BUM	ISSUED FOR INFORMATION	IFI
A	11/20/2022	M.KH	M.KH	DR.BUM	ISSUED FOR INFORMATION	IFI

SCALE: AS SHOWN | SHOPDRAWING | DATE: 12/05/2023

DRAWING TITLE
6TH OF OCTOBER MONORAIL
SERVICE WALKWAYS
ZONE (1008)
W662

Project Code	Rubric	Initiator	Lot	Ref	Number	Revision
93M	047	ACC	60DEP	DWG	0886	1 B

Tekla structures

approval is subject to approval of coordination package between multi-discipline

REVIEWED WITH COMMENT
MONORAILS PROJECT

All holes are 22mm U.N.O Length & Area & Weight per piece

Mark	Profile	Grade	QTY	Length	Area	Weight
W661	CHS48.3*4.0	S235JR	1	81.2	0.01	0.4

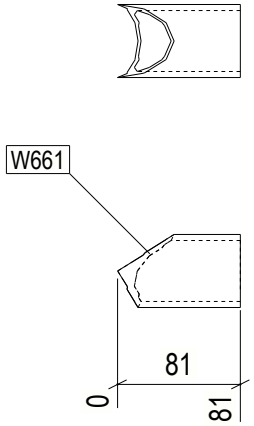

1 REQ'D AS DRAWN MK'D W661

6 October Monorail
Engineering Unit
Valid For Construction

GENERAL NOTES:

1. THE DIMENSIONS SHOWN ARE NOMINAL (IN MILLIMETERS), U.N.O.
2. WELD SIZESHALL BE AISC MINIMUM OF 6 mm UNLESS NOTED OTHERWISE.
3. ALL FIELD WELDS SHALL BE INSPECTED PER QUALITY ASSURANCE AND SPECIAL INSPECTIONS.

REFERENCE DRAWINGS

1	93M-BOA-NAT-LOT-04833
2	93M-BOA-NAT-LOT-09170
3	93M-BOA-NAT-LOT-01976
4	93M-BOA-NAT-LOT-20021
5	
6	
7	
8	
9	

6TH OF OCTOBER CITY RAIL TRANSIT MONORAIL

The Authority | Hill International Consultant | Main Contractor | Structural Designer

KEY PLAN:

REV.	DATE	DSG	CHK	APP	AMENDMENTS	STATUS
B	12/05/2023	M.KH	M.KH	DR.M.M	ISSUED FOR INFORMATION	IFI
A	11/20/2022	M.KH	M.KH	DR.M.M	ISSUED FOR INFORMATION	IFI

SCALE: AS SHOWN | SHOPDRAWING | DATE: 12/05/2023

DRAWING TITLE
6TH OF OCTOBER MONORAIL
SERVICE WALKWAYS
ZONE (1008)
W661

Project Code	Rubric	Initiator	Lot	Ref	Number	Revision
9 3 M	0 4 7 6	A C C	6 0	D E P	D W G	0 8 8 6 2	B

Tekla structures

approval is subject to approval of coordination package between multi-discipline

REVIEWED WITH COMMENT
MONORAILS PROJECT

All holes are 22mm U.N.O Length & Area & Weight per piece

Mark	Profile	Grade	QTY	Length	Area	Weight
W660	CHS48.3*4.0	S235JR	2	351.5	0.05	1.5

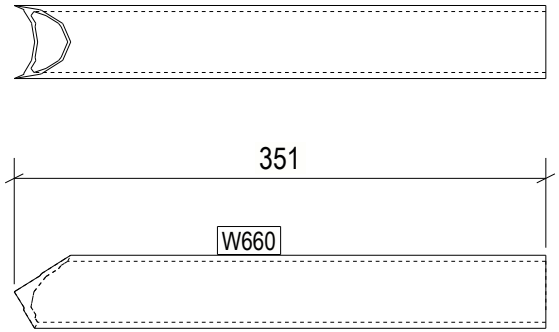

2 REQ'D AS DRAWN MK'D W660

6 October Monorail
Engineering Unit
Valid For Construction

GENERAL NOTES:

1. THE DIMENSIONS SHOWN ARE NOMINAL (IN MILLIMETERS), U.N.O.
2. WELD SIZESHALL BE AISC MINIMUM OF 6 mm UNLESS NOTED OTHERWISE.
3. ALL FIELD WELDS SHALL BE INSPECTED PER QUALITY ASSURANCE AND SPECIAL INSPECTIONS.

REFERENCE DRAWINGS

1	93M-BOA-NAT-LOT-04833
2	93M-BOA-NAT-LOT-09170
3	93M-BOA-NAT-LOT-01976
4	93M-BOA-NAT-LOT-20021
5	
6	
7	
8	
9	

6TH OF OCTOBER CITY RAIL TRANSIT MONORAIL

The Authority | Hill International Consultant | Main Contractor | Structural Designer

KEY PLAN:

REV.	DATE	DSG	CHK	APP	AMENDMENTS	STATUS
B	12/05/2023	M.KH	M.KH	DR.M.M	ISSUED FOR INFORMATION	IFI
A	11/20/2022	M.KH	M.KH	DR.M.M	ISSUED FOR INFORMATION	IFI

SCALE: AS SHOWN | SHOPDRAWING | DATE: 12/05/2023

DRAWING TITLE
6TH OF OCTOBER MONORAIL
SERVICE WALKWAYS
ZONE (1008)
W660

Project Code	Rubric	Initiator	Lot	Ref	Number	Revision
9 3 M	0 4 7 6	A C C	6 0 D	E P	D W G	0 8 8 6 3	B

Tekla structures

approval is subject to approval of coordination package between multi-discipline

REVIEWED WITH COMMENT
MONORAILS PROJECT

All holes are 22mm U.N.O Length & Area & Weight per piece						
W659	CHS48.3*4.0	S235JR	10	1046.5	0.16	4.6
Mark	Profile	Grade	QTY	Length	Area	Weight

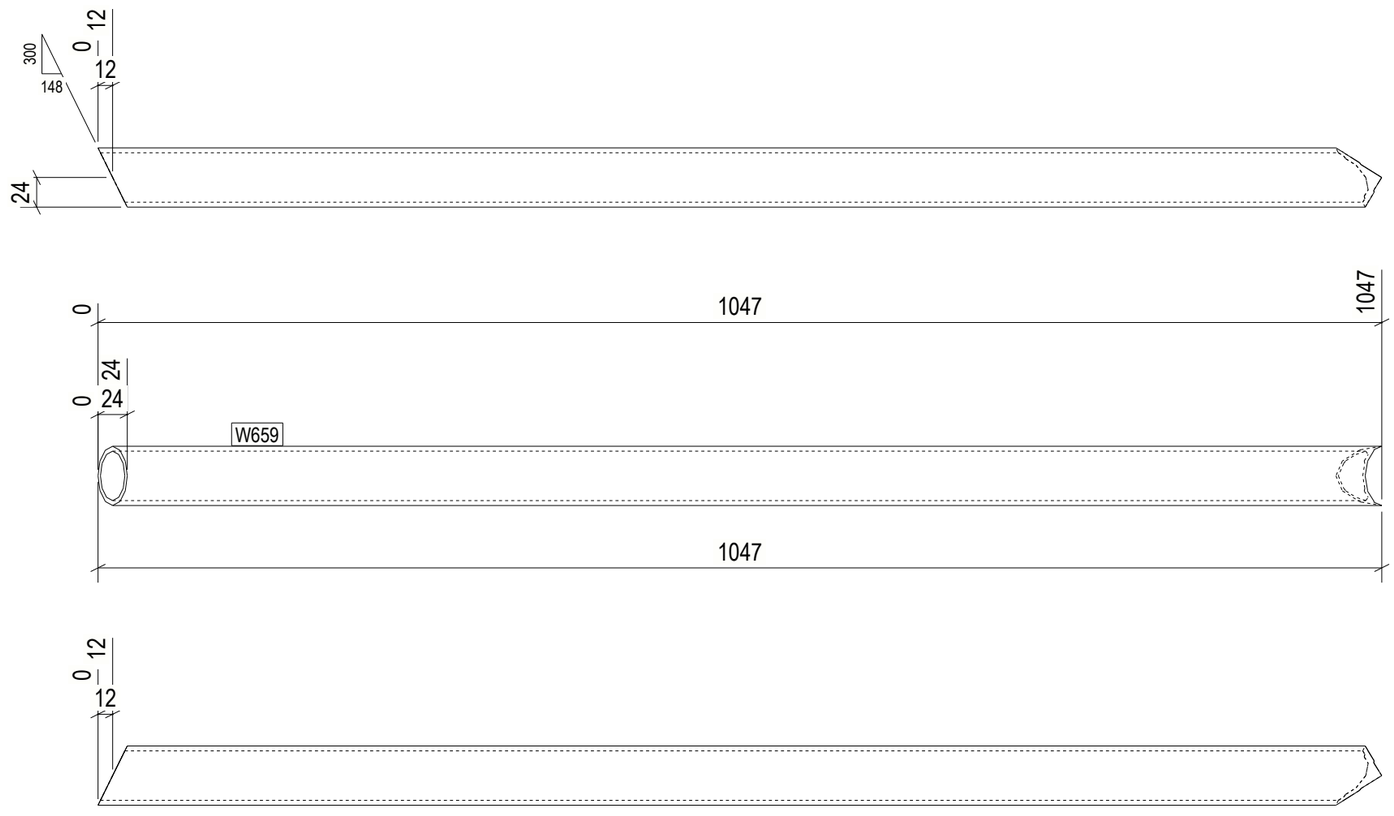

10 REQ'D AS DRAWN MK'D W659

6 October Monorail
Engineering Unit
Valid For Construction

GENERAL NOTES:

1. THE DIMENSIONS SHOWN ARE NOMINAL (IN MILLIMETERS), U.N.O.
2. WELD SIZESHALL BE AISC MINIMUM OF 6 mm UNLESS NOTED OTHERWISE.
3. ALL FIELD WELDS SHALL BE INSPECTED PER QUALITY ASSURANCE AND SPECIAL INSPECTIONS.

REFERENCE DRAWINGS

1	93M-BOA-NAT-LOT-04833
2	93M-BOA-NAT-LOT-09170
3	93M-BOA-NAT-LOT-01976
4	93M-BOA-NAT-LOT-20021
5	
6	
7	
8	
9	

6TH OF OCTOBER CITY RAIL TRANSIT MONORAIL

The Authority | Hill International Consultant | Main Contractor | Structural Designer

KEY PLAN:

SCALE	SHOP DRAWING	DATE
AS SHOWN		12/05/2023

REV	DATE	DRN	CHK	APP	AMENDMENTS	STATUS
B	12/05/2023	M.KH	M.KH	DR.M.M	ISSUED FOR INFORMATION	IFI

DRAWING TITLE

6TH OF OCTOBER MONORAIL
SERVICE WALKWAYS
ZONE (1008)
W659

Project Code	Rubric	Initiator	Lot	Ref	Number	Revision
9 3	M 0 4 7 6	A C C	6 0 D E P	D W G	0 8 8 6 4	B

Tekla structures

approval is subject to approval of coordination package between multi-discipline

REVIEWED WITH COMMENT
MONORAILS PROJECT

All holes are 22mm U.N.O Length & Area & Weight per piece

Mark	Profile	Grade	QTY	Length	Area	Weight
W658	CHS48.3*4.0	S235JR	1	351.5	0.05	1.5

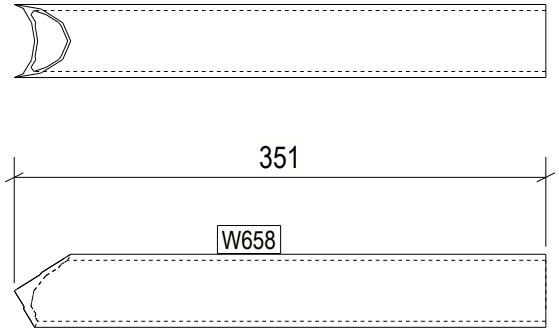

1 REQ'D AS DRAWN MK'D W658

6 October Monorail
Engineering Unit
Valid For Construction

GENERAL NOTES:

1. THE DIMENSIONS SHOWN ARE NOMINAL (IN MILLIMETERS), U.N.O.
2. WELD SIZESHALL BE AISC MINIMUM OF 6 mm UNLESS NOTED OTHERWISE.
3. ALL FIELD WELDS SHALL BE INSPECTED PER QUALITY ASSURANCE AND SPECIAL INSPECTIONS.

REFERENCE DRAWINGS

1	93M-BOA-NAT-LOT-04833
2	93M-BOA-NAT-LOT-09170
3	93M-BOA-NAT-LOT-01976
4	93M-BOA-NAT-LOT-20021
5	
6	
7	
8	
9	

6TH OF OCTOBER CITY RAIL TRANSIT MONORAIL

The Authority | Hill International Consultant | Main Contractor | Structural Designer

KEY PLAN:

REV.	DATE	DSG	CHK	APP	AMENDMENTS	STATUS
B	12/05/2023	M.KH	M.KH	DR.BIM	ISSUED FOR INFORMATION	IFI
A	11/20/2022	M.KH	M.KH	DR.BIM	ISSUED FOR INFORMATION	IFI

SCALE: AS SHOWN | SHOPDRAWING | DATE: 12/05/2023

DRAWING TITLE
6TH OF OCTOBER MONORAIL
SERVICE WALKWAYS
ZONE (1008)
W658

Project Code	Rubric	Initiator	Lot	Ref	Number	Revision
9 3 M	0 4 7 6	A C C	6 0 D	E P	D W G	0 8 8 6 5	B

Tekla structures

approval is subject to approval of coordination package between multi-discipline

REVIEWED WITH COMMENT
MONORAILS PROJECT

All holes are 22mm U.N.O Length & Area & Weight per piece

Mark	Profile	Grade	QTY	Length	Area	Weight
W657	CHS48.3*4.0	S235JR	10	316.6	0.05	1.4

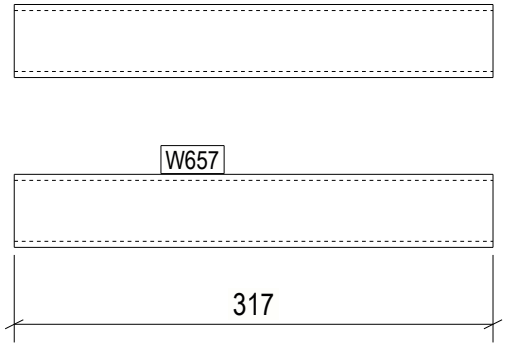

10 REQ'D AS DRAWN MK'D W657

6 October Monorail
Engineering Unit
Valid For Construction

GENERAL NOTES:

1. THE DIMENSIONS SHOWN ARE NOMINAL (IN MILLIMETERS), U.N.O.
2. WELD SIZESHALL BE AISC MINIMUM OF 6 mm UNLESS NOTED OTHERWISE.
3. ALL FIELD WELDS SHALL BE INSPECTED PER QUALITY ASSURANCE AND SPECIAL INSPECTIONS.

REFERENCE DRAWINGS

1	93M-BOA-NAT-LOT-04833
2	93M-BOA-NAT-LOT-09170
3	93M-BOA-NAT-LOT-01976
4	93M-BOA-NAT-LOT-20021
5	
6	
7	
8	
9	

6TH OF OCTOBER CITY RAIL TRANSIT MONORAIL

The Authority | Hill International Consultant | Main Contractor | Structural Designer

KEY PLAN:

REV.	DATE	DSG.	CHK.	APP.	AMENDMENTS	STATUS
B	12/05/2023	M.KH	M.KH	DR.BIM	ISSUED FOR INFORMATION	IFI
A	11/20/2022	M.KH	M.KH	DR.BIM	ISSUED FOR INFORMATION	IFI

SCALE: AS SHOWN | SHOPDRAWING | DATE: 12/05/2023

DRAWING TITLE
6TH OF OCTOBER MONORAIL
SERVICE WALKWAYS
ZONE (1008)
W657

Project Code	Rubric	Initiator	Lot	Ref	Number	Revision
9 3 M	0 4 7 6	A C C	6 0 D E	P D W	G 0 8 8 6 6	B

Tekla structures

approval is subject to approval of coordination package between multi-discipline

REVIEWED WITH COMMENT
MONORAILS PROJECT

All holes are 22mm U.N.O Length & Area & Weight per piece

Mark	Profile	Grade	QTY	Length	Area	Weight
W656	CHS48.3*4.0	S235JR	1	81.2	0.01	0.4

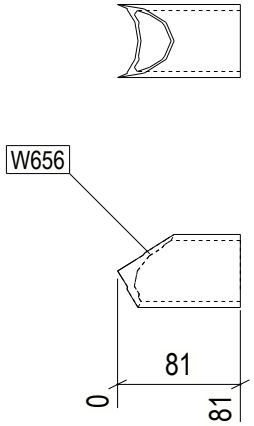

1 REQ'D AS DRAWN MK'D W656

6 October Monorail
Engineering Unit
Valid For Construction

GENERAL NOTES:

1. THE DIMENSIONS SHOWN ARE NOMINAL (IN MILLIMETERS), U.N.O.
2. WELD SIZESHALL BE AISC MINIMUM OF 6 mm UNLESS NOTED OTHERWISE.
3. ALL FIELD WELDS SHALL BE INSPECTED PER QUALITY ASSURANCE AND SPECIAL INSPECTIONS.

REFERENCE DRAWINGS

1	93M-BOA-NAT-LOT-04833
2	93M-BOA-NAT-LOT-09170
3	93M-BOA-NAT-LOT-01976
4	93M-BOA-NAT-LOT-20021
5	
6	
7	
8	
9	

6TH OF OCTOBER CITY RAIL TRANSIT MONORAIL

The Authority | Hill International Consultant | Main Contractor | Structural Designer

KEY PLAN:

REV.	DATE	DSG	CHK	APP	AMENDMENTS	STATUS
B	12/05/2023	M.KH	M.KH	DR.BIM	ISSUED FOR INFORMATION	IFI
A	11/20/2022	M.KH	M.KH	DR.BIM	ISSUED FOR INFORMATION	IFI

SCALE: AS SHOWN | SHOPDRAWING | DATE: 12/05/2023

DRAWING TITLE
6TH OF OCTOBER MONORAIL
SERVICE WALKWAYS
ZONE (1008)
W656

Project Code	Rubric	Initiator	Lot	Ref	Number	Revision
9 3 M	0 4 7 6	A C C	6 0 D	E P	D W G	0 8 8 6 7	B

Tekla structures

approval is subject to approval of coordination package between multi-discipline

REVIEWED WITH COMMENT
MONORAILS PROJECT

All holes are 22mm U.N.O Length & Area & Weight per piece

Mark	Profile	Grade	QTY	Length	Area	Weight
W655	CHS48.3*4.0	S235JR	4	981.0	0.15	4.3

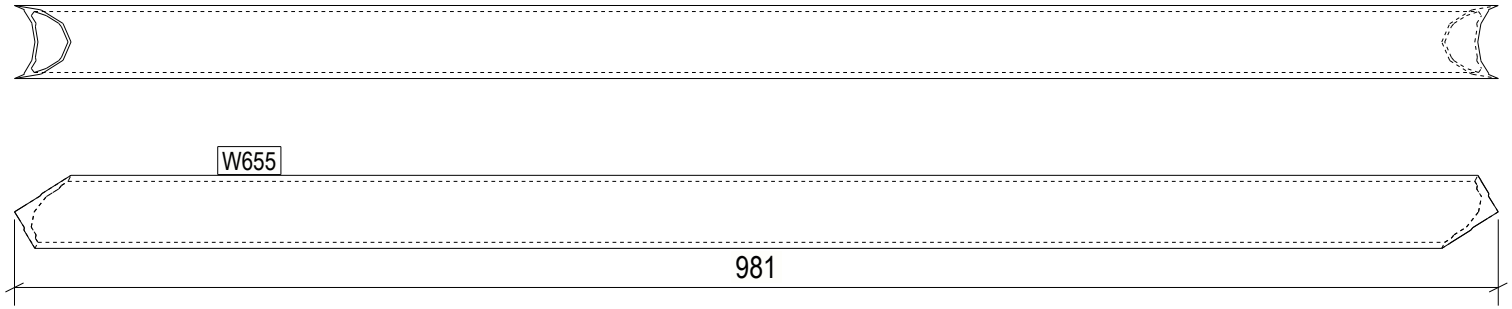

4 REQ'D AS DRAWN MK'D W655

6 October Monorail
Engineering Unit
Valid For Construction

GENERAL NOTES:

1. THE DIMENSIONS SHOWN ARE NOMINAL (IN MILLIMETERS), U.N.O.
2. WELD SIZESHALL BE AISC MINIMUM OF 6 mm UNLESS NOTED OTHERWISE.
3. ALL FIELD WELDS SHALL BE INSPECTED PER QUALITY ASSURANCE AND SPECIAL INSPECTIONS.

REFERENCE DRAWINGS

1	93M-BOA-NAT-LOT-04833
2	93M-BOA-NAT-LOT-09170
3	93M-BOA-NAT-LOT-01976
4	93M-BOA-NAT-LOT-20021
5	
6	
7	
8	
9	

6TH OF OCTOBER CITY RAIL TRANSIT MONORAIL

The Authority | Hill International Consultant | Main Contractor | Structural Designer

KEY PLAN:

REV.	DATE	DSG	CHK	APP	AMENDMENTS	STATUS
B	12/05/2023	M.KH	M.KH	DR.M.M	ISSUED FOR INFORMATION	IFI
A	11/20/2022	M.KH	M.KH	DR.M.M	ISSUED FOR INFORMATION	IFI

SCALE: AS SHOWN | SHOPDRAWING | DATE: 12/05/2023

DRAWING TITLE
6TH OF OCTOBER MONORAIL
SERVICE WALKWAYS
ZONE (1008)
W655

Project Code	Rubric	Initiator	Lot	Ref	Number	Revision
9 3 M	0 4 7 6	A C C	6 0	D E P	D W G	0 8 8 6 8	B

Tekla structures

All holes are 22mm U.N.O Length & Area & Weight per piece						
W654	CHS48.3*4.0	S235JR	10	1046.6	0.16	4.6
Mark	Profile	Grade	QTY	Length	Area	Weight

approval is subject to approval of coordination package between multi-discipline

REVIEWED WITH COMMENT MONORAILS PROJECT

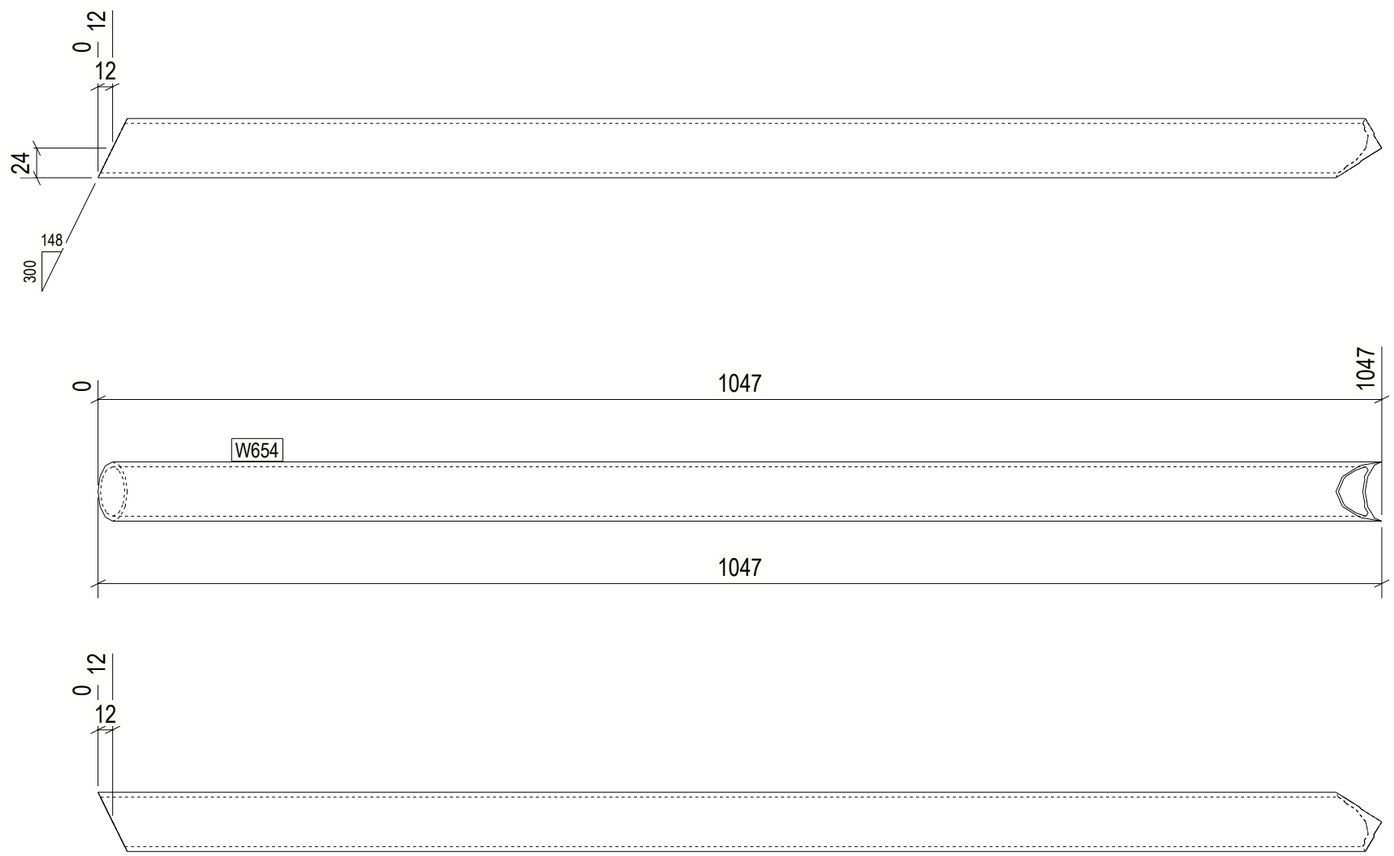

10 REQ'D AS DRAWN MK'D W654

6 October Monorail Engineering Unit
Valid For Construction

GENERAL NOTES:

1. THE DIMENSIONS SHOWN ARE NOMINAL (IN MILLIMETERS), U.N.O.
2. WELD SIZESHALL BE AISC MINIMUM OF 6 mm UNLESS NOTED OTHERWISE.
3. ALL FIELD WELDS SHALL BE INSPECTED PER QUALITY ASSURANCE AND SPECIAL INSPECTIONS.

REFERENCE DRAWINGS

1	93M-BOA-NAT-LOT-04833
2	93M-BOA-NAT-LOT-09170
3	93M-BOA-NAT-LOT-01976
4	93M-BOA-NAT-LOT-20021
5	
6	
7	
8	
9	

6TH OF OCTOBER CITY RAIL TRANSIT MONORAIL

The Authority | Hill International Consultant | ORASCOM BOMBARDIER Main Contractor | INNOVA Structural Designer

KEY PLAN:

SCALE	SHOP DRAWING	DATE
AS SHOWN		12/05/2023

REV	DATE	DSG	CHK	APP	AMENDMENTS	STATUS
B	12/05/2023	M.KH	M.KH	DR.M.M	ISSUED FOR INFORMATION	IFI
	11/04/22					

DRAWING TITLE

6TH OF OCTOBER MONORAIL SERVICE WALKWAYS ZONE (1008)
W654

Project Code	Rubric	Initiator	Lot	Ref	Number	Revision
93M	0476	ACC	60DEP	DWG	08869	B

Tekla structures

approval is subject to approval of coordination package between multi-discipline

REVIEWED WITH COMMENT
MONORAILS PROJECT

All holes are 22mm U.N.O Length & Area & Weight per piece

Mark	Profile	Grade	QTY	Length	Area	Weight
W653	CHQD_PL5*270.3	S235JR	2	990.0	0.55	10.4

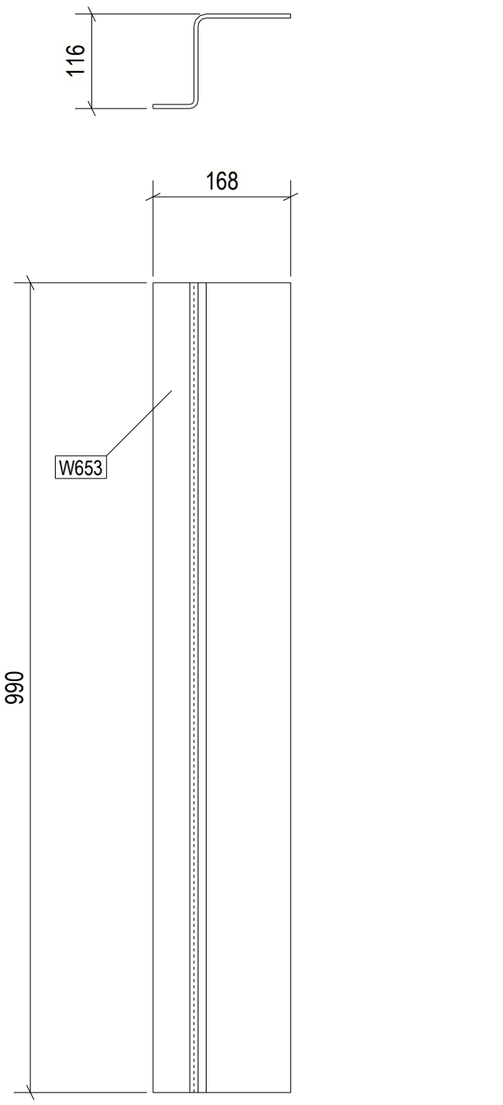

2 REQ'D AS DRAWN MK'D W653

GENERAL NOTES:

1. THE DIMENSIONS SHOWN ARE NOMINAL (IN MILLIMETERS), U.N.O.
2. WELD SIZESHALL BE AISC MINIMUM OF 6 mm UNLESS NOTED OTHERWISE.
3. ALL FIELD WELDS SHALL BE INSPECTED PER QUALITY ASSURANCE AND SPECIAL INSPECTIONS.

REFERENCE DRAWINGS

1	93M-BOA-NAT-LOT-04833
2	93M-BOA-NAT-LOT-09170
3	93M-BOA-NAT-LOT-01976
4	93M-BOA-NAT-LOT-20021
5	
6	
7	
8	
9	

6TH OF OCTOBER CITY RAIL TRANSIT MONORAIL

The Authority | Consultant: Hill International | Main Contractor: ORASCOM CONSTRUCTION / BOMBARDIER | Structural Designer: INNOVA

KEY PLAN:

6 October Monorail Engineering Unit
Valid For Construction

SCALE: AS SHOWN | SHOP DRAWING | DATE: 12/05/2023

REV	DATE	DSN	CHK	APP	AMENDMENT DESCRIPTION	STATUS
B	12/05/2023	M.KH	M.KH	DR.M.M	ISSUED FOR INFORMATION	IFI
A	17/4/2022	D.SR	CHK	APP	AMENDMENT DESCRIPTION	STATUS

DRAWING TITLE
6TH OF OCTOBER MONORAIL
SERVICE WALKWAYS
ZONE (1008)
W653

Project Code	Rubric	Initiator	Lot	Ref	Number	Revision
93	M047	6ACC	60DE	PDWG	0887	0 B

Tekla structures

All holes are 22mm U.N.O Length & Area & Weight per piece						
W652	PL10*250	S355JR	1	305.8	0.13	4.7
Mark	Profile	Grade	QTY	Length	Area	Weight

approval is subject to approval of coordination package between multi-discipline

REVIEWED WITH COMMENT MONORAILS PROJECT

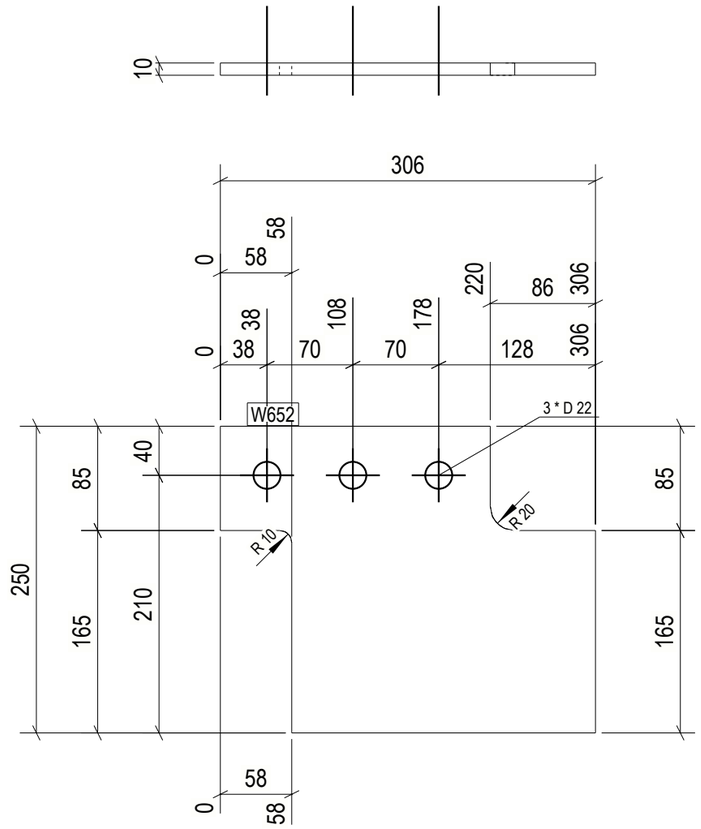

1 REQ'D AS DRAWN MK'D W652

6 October Monorail Engineering Unit Valid For Construction

GENERAL NOTES:

1. THE DIMENSIONS SHOWN ARE NOMINAL (IN MILLIMETERS), U.N.O.
2. WELD SIZESHALL BE AISC MINIMUM OF 6 mm UNLESS NOTED OTHERWISE.
3. ALL FIELD WELDS SHALL BE INSPECTED PER QUALITY ASSURANCE AND SPECIAL INSPECTIONS.

REFERENCE DRAWINGS

1	93M-BOA-NAT-LOT-04833
2	93M-BOA-NAT-LOT-09170
3	93M-BOA-NAT-LOT-01976
4	93M-BOA-NAT-LOT-20021
5	
6	
7	
8	
9	

6TH OF OCTOBER CITY RAIL TRANSIT MONORAIL

The Authority | Hill International Consultant | ORASCOM BOMBARDIER Main Contractor | INNOVA Structural Designer

KEY PLAN:

SCALE	SHOP DRAWING	DATE
AS SHOWN		12/05/2023

REV	DATE	DSN	CHK	APP	AMENDMENTS	STATUS
B	12/05/2023	M.KH	M.KH	DR.M.M	ISSUED FOR INFORMATION	IFI

DRAWING TITLE

6TH OF OCTOBER MONORAIL SERVICE WALKWAYS ZONE (1008) W652

Project Code	Rubric	Initiator	Lot	Ref	Number	Revision
93M	0476	ACC	60DEP	DWG	08871	B

Tekla structures

approval is subject to approval of coordination package between multi-discipline

REVIEWED WITH COMMENT
MONORAILS PROJECT

All holes are 22mm U.N.O Length & Area & Weight per piece

Mark	Profile	Grade	QTY	Length	Area	Weight
W651	PL5*80	S355JR	4	168.2	0.02	0.3

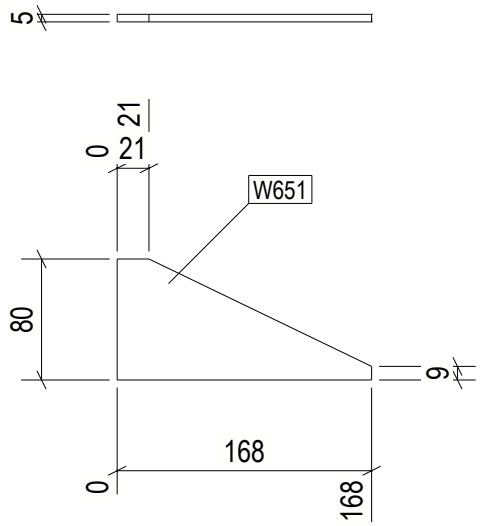

4 REQ'D AS DRAWN MK'D W651

6 October Monorail
Engineering Unit
Valid For Construction

GENERAL NOTES:

1. THE DIMENSIONS SHOWN ARE NOMINAL (IN MILLIMETERS), U.N.O.
2. WELD SIZESHALL BE AISC MINIMUM OF 6 mm UNLESS NOTED OTHERWISE.
3. ALL FIELD WELDS SHALL BE INSPECTED PER QUALITY ASSURANCE AND SPECIAL INSPECTIONS.

REFERENCE DRAWINGS

1	93M-BOA-NAT-LOT-04833
2	93M-BOA-NAT-LOT-09170
3	93M-BOA-NAT-LOT-01976
4	93M-BOA-NAT-LOT-20021
5	
6	
7	
8	
9	

6TH OF OCTOBER CITY RAIL TRANSIT MONORAIL

The Authority — Hill International Consultant — Main Contractor — Structural Designer

KEY PLAN:

REV.	DATE	DSG	CHK	APP	AMENDMENTS	STATUS
B	12/05/2023	M.KH	M.KH	DR.BM	ISSUED FOR INFORMATION	IFI
A	11/20/2022	M.KH	M.KH	DR.BM	ISSUED FOR INFORMATION	IFI

SCALE: AS SHOWN | SHOPDRAWING | DATE: 12/05/2023

DRAWING TITLE
6TH OF OCTOBER MONORAIL
SERVICE WALKWAYS
ZONE (1008)
W651

Project Code	Rubric	Initiator	Lot	Ref	Number	Revision
93M	047	6ACC	60DE	PDWG	0872	B

Tekla structures

All holes are 22mm U.N.O Length & Area & Weight per piece						
W650	CHQD_PL5*470	S235JR	22	990.0	0.94	18.2
Mark	Profile	Grade	QTY	Length	Area	Weight

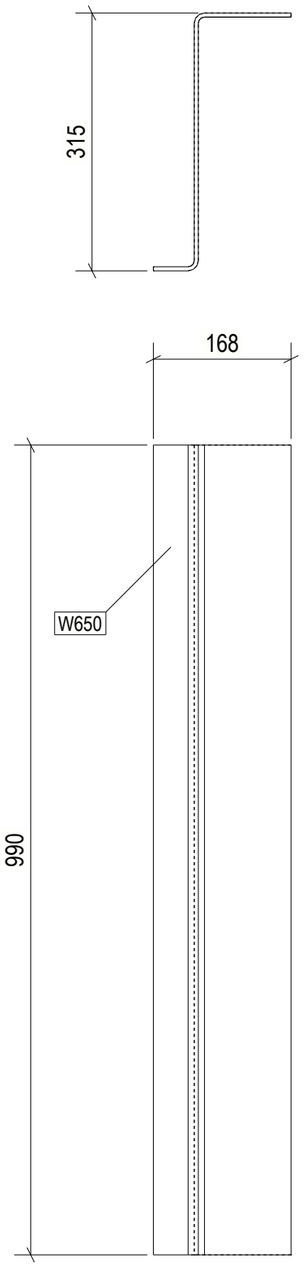

approval is subject to approval of coordination package between multi-discipline

REVIEWED WITH COMMENT MONORAILS PROJECT

22 REQ'D AS DRAWN MK'D W650

6 October Monorail Engineering Unit Valid For Construction

GENERAL NOTES:

1. THE DIMENSIONS SHOWN ARE NOMINAL (IN MILLIMETERS), U.N.O.
2. WELD SIZESHALL BE AISC MINIMUM OF 6 mm UNLESS NOTED OTHERWISE.
3. ALL FIELD WELDS SHALL BE INSPECTED PER QUALITY ASSURANCE AND SPECIAL INSPECTIONS.

REFERENCE DRAWINGS

1	93M-BOA-NAT-LOT-04833
2	93M-BOA-NAT-LOT-09170
3	93M-BOA-NAT-LOT-01976
4	93M-BOA-NAT-LOT-20021
5	
6	
7	
8	
9	

6TH OF OCTOBER CITY RAIL TRANSIT MONORAIL

The Authority | Hill International Consultant | ORASCOM BOMBARDIER Main Contractor | INNOVA Structural Designer

KEY PLAN:

SCALE	SHOP DRAWING	DATE
AS SHOWN		12/05/2023

REV	DATE	DSG	CHK	APP	AMENDMENTS	STATUS
B	12/05/2023	M.KH	M.KH	DR.M.M	ISSUED FOR INFORMATION	IFI

DRAWING TITLE

6TH OF OCTOBER MONORAIL SERVICE WALKWAYS ZONE (1008) W650

Project Code	Rubric	Initiator	Lot	Ref	Number	Revision
93M	0476	ACC	60DEP	DWG	08873	B

Tekla structures

approval is subject to approval of coordination package between multi-discipline

REVIEWED WITH COMMENT
MONORAILS PROJECT

All holes are 22mm U.N.O Length & Area & Weight per piece

Mark	Profile	Grade	QTY	Length	Area	Weight
W649	CHQD_PL5*193.4	S235JR	2	990.0	0.39	7.5

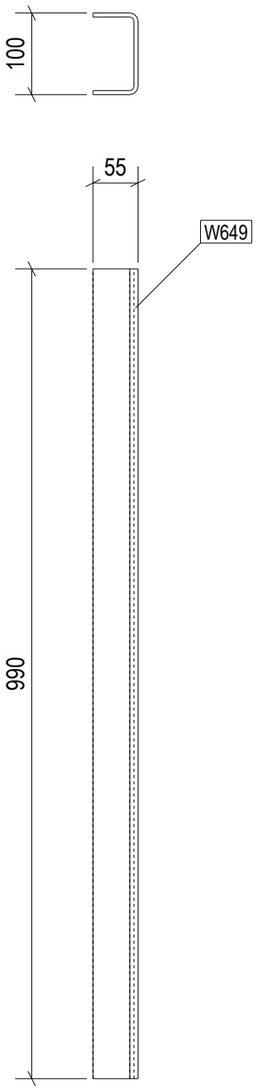

2 REQ'D AS DRAWN MK'D W649

GENERAL NOTES:

1. THE DIMENSIONS SHOWN ARE NOMINAL (IN MILLIMETERS), U.N.O.
2. WELD SIZESHALL BE AISC MINIMUM OF 6 mm UNLESS NOTED OTHERWISE.
3. ALL FIELD WELDS SHALL BE INSPECTED PER QUALITY ASSURANCE AND SPECIAL INSPECTIONS.

REFERENCE DRAWINGS

1	93M-BOA-NAT-LOT-04833
2	93M-BOA-NAT-LOT-09170
3	93M-BOA-NAT-LOT-01976
4	93M-BOA-NAT-LOT-20021
5	
6	
7	
8	
9	

6TH OF OCTOBER CITY RAIL TRANSIT MONORAIL

The Authority | Consultant: Hill International | Main Contractor: ORASCOM CONSTRUCTION, BOMBARDIER | Structural Designer: INNOVA TRANSPORTATION

KEY PLAN:

6 October Monorail Engineering Unit
Valid For Construction

SCALE	SHOP DRAWING	DATE
AS SHOWN		12/05/2023

REV.	DATE	DSN	CHK	APP.	AMENDMENTS	STATUS
B	12/05/2023	M.KH	M.KH	DR.M.M	ISSUED FOR INFORMATION	IFI

DRAWING TITLE

6TH OF OCTOBER MONORAIL
SERVICE WALKWAYS
ZONE (1008)
W649

Project Code	Rubric	Initiator	Lot	Ref	Number	Revision
9 3	M 0 4 7 6	A C C	6 0 D E P	D W G	0 8 8 7 4	B

Tekla structures

approval is subject to approval of coordination package between multi-discipline

REVIEWED WITH COMMENT MONORAILS PROJECT

All holes are 22mm U.N.O Length & Area & Weight per piece						
W648	L70*7	S235JR	3	985.9	0.28	7.2
Mark	Profile	Grade	QTY	Length	Area	Weight

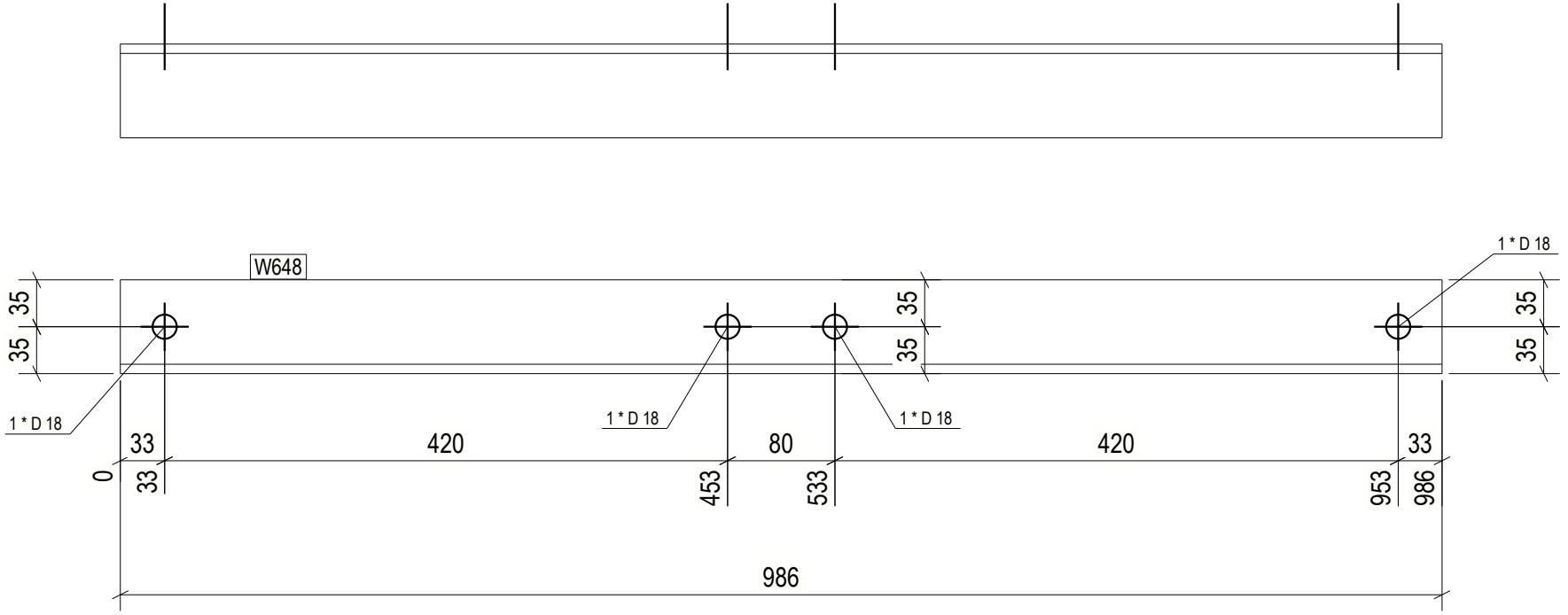

3 REQ'D AS DRAWN MK'D W648

6 October Monorail Engineering Unit
Valid For Construction

GENERAL NOTES:

1. THE DIMENSIONS SHOWN ARE NOMINAL (IN MILLIMETERS), U.N.O.
2. WELD SIZESHALL BE AISC MINIMUM OF 6 mm UNLESS NOTED OTHERWISE.
3. ALL FIELD WELDS SHALL BE INSPECTED PER QUALITY ASSURANCE AND SPECIAL INSPECTIONS.

REFERENCE DRAWINGS

1	93M-BOA-NAT-LOT-04833
2	93M-BOA-NAT-LOT-09170
3	93M-BOA-NAT-LOT-01976
4	93M-BOA-NAT-LOT-20021
5	
6	
7	
8	
9	

6TH OF OCTOBER CITY RAIL TRANSIT MONORAIL

The Authority — Hill International Consultant — Main Contractor — Structural Designer

KEY PLAN:

SCALE	SHOPDRAWING	DATE
AS SHOWN		12/05/2023

REV	DATE	DSG	CHK	APP	AMENDMENTS	STATUS
B	12/05/2023	M.KH	M.KH	DR.M.M	ISSUED FOR INFORMATION	IFI
A	11/20/2022	M.KH	M.KH	DR.M.M	ISSUED FOR INFORMATION	IFI

DRAWING TITLE

6TH OF OCTOBER MONORAIL SERVICE WALKWAYS ZONE (1008)
W648

Project Code	Rubric	Initiator	Lot	Ref	Number	Revision
93	M0476	ACC	60DEP	DWG	08875	B

Tekla structures

approval is subject to approval of coordination package between multi-discipline

REVIEWED WITH COMMENT MONORAILS PROJECT

All holes are 22mm U.N.O Length & Area & Weight per piece

Mark	Profile	Grade	QTY	Length	Area	Weight
W647	L70*7	S235JR	1	1160.0	0.33	8.5

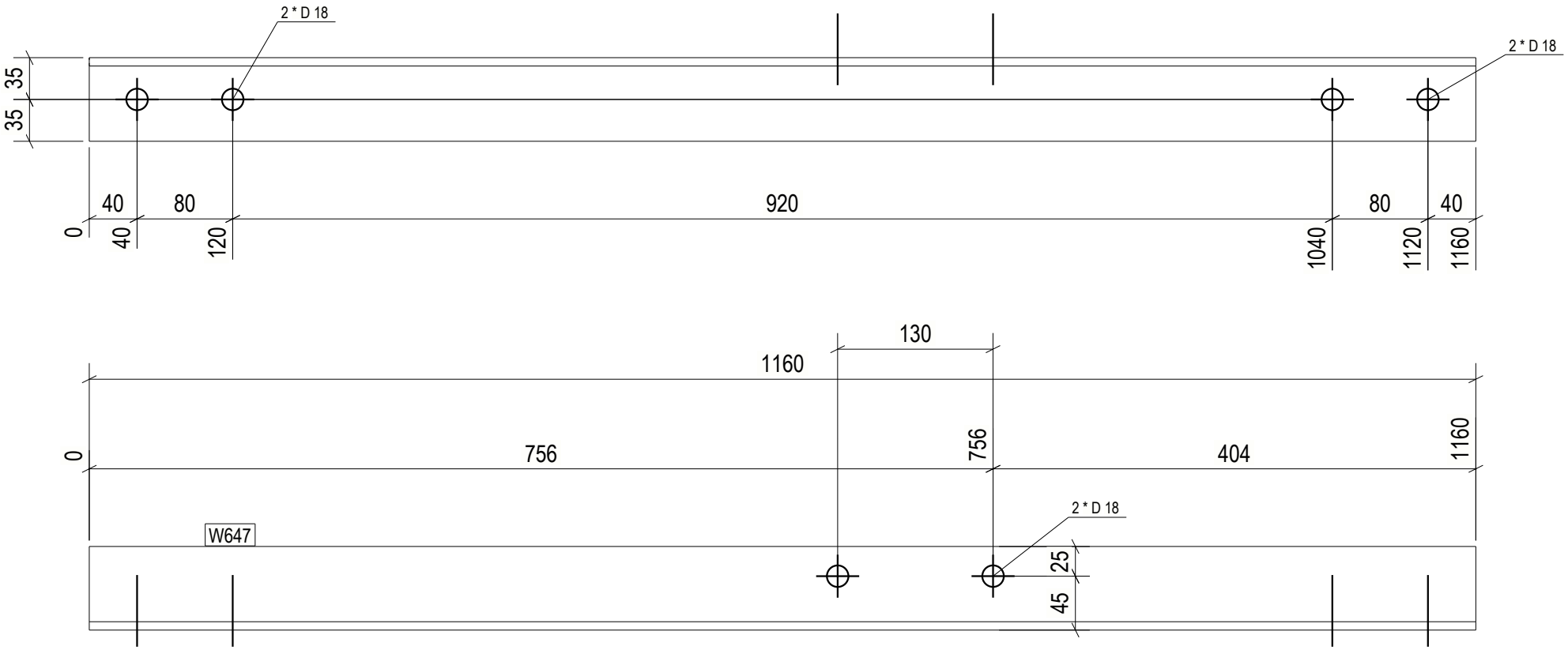

1 REQ'D AS DRAWN MK'D W647

6 October Monorail Engineering Unit Valid For Construction

GENERAL NOTES:

1. THE DIMENSIONS SHOWN ARE NOMINAL (IN MILLIMETERS), U.N.O.
2. WELD SIZESHALL BE AISC MINIMUM OF 6 mm UNLESS NOTED OTHERWISE.
3. ALL FIELD WELDS SHALL BE INSPECTED PER QUALITY ASSURANCE AND SPECIAL INSPECTIONS.

REFERENCE DRAWINGS

1	93M-BOA-NAT-LOT-04833
2	93M-BOA-NAT-LOT-09170
3	93M-BOA-NAT-LOT-01976
4	93M-BOA-NAT-LOT-20021
5	
6	
7	
8	
9	

6TH OF OCTOBER CITY RAIL TRANSIT MONORAIL

The Authority — Hill International Consultant — Main Contractor — Structural Designer

KEY PLAN:

REV.	DATE	DSG	CHK	APP	AMENDMENTS	STATUS
B	12/05/2023	M.KH	M.KH	DR.BM	ISSUED FOR INFORMATION	IFI
A	11/20/2022	M.KH	M.KH	DR.BM	ISSUED FOR INFORMATION	IFI

SCALE: AS SHOWN | SHOPDRAWING | DATE: 12/05/2023

DRAWING TITLE

6TH OF OCTOBER MONORAIL SERVICE WALKWAYS ZONE (1008) W647

Project Code	Rubric	Initiator	Lot	Ref	Number	Revision
9 3 M	0 4 7 6	A C C	6 0 D	m P	D W G	0 8 7 6	B

Tekla structures

approval is subject to approval of coordination package between multi-discipline

REVIEWED WITH COMMENT
MONORAILS PROJECT

All holes are 22mm U.N.O Length & Area & Weight per piece

Mark	Profile	Grade	QTY	Length	Area	Weight
W646	L70*7	S235JR	1	985.7	0.28	7.2

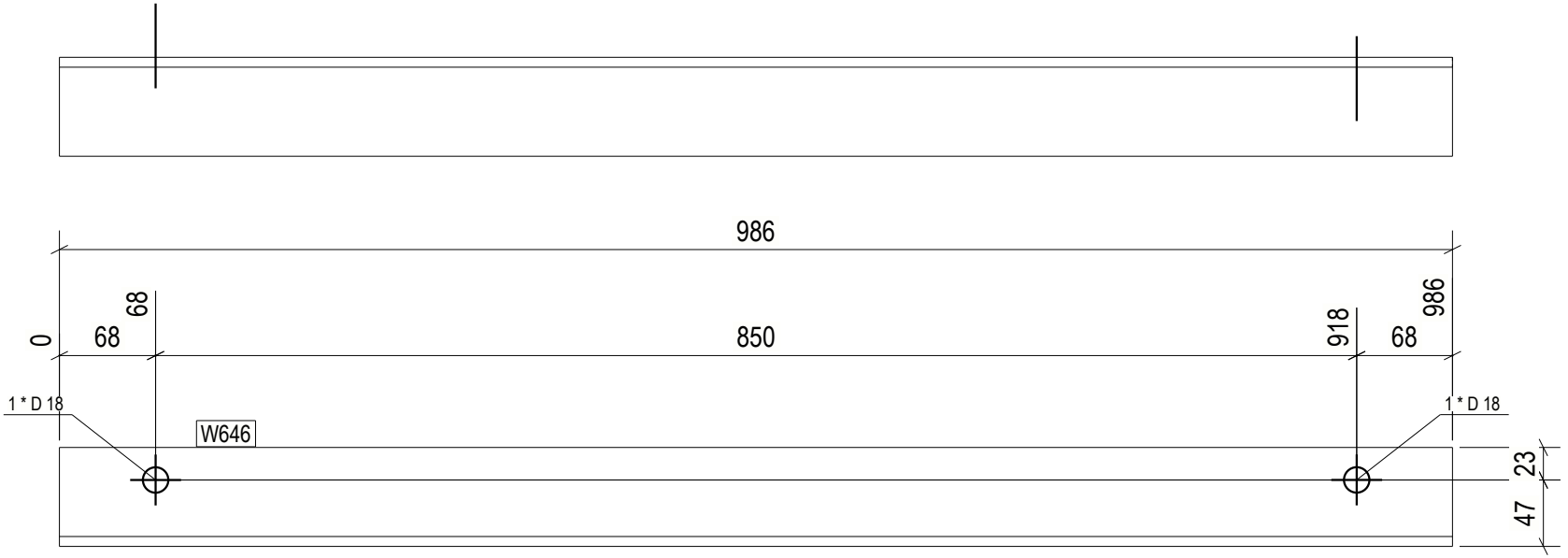

1 REQ'D AS DRAWN MK'D W646

6 October Monorail
Engineering Unit
Valid For Construction

GENERAL NOTES:

1. THE DIMENSIONS SHOWN ARE NOMINAL (IN MILLIMETERS), U.N.O.
2. WELD SIZESHALL BE AISC MINIMUM OF 6 mm UNLESS NOTED OTHERWISE.
3. ALL FIELD WELDS SHALL BE INSPECTED PER QUALITY ASSURANCE AND SPECIAL INSPECTIONS.

REFERENCE DRAWINGS

1	93M-BOA-NAT-LOT-04833
2	93M-BOA-NAT-LOT-09170
3	93M-BOA-NAT-LOT-01976
4	93M-BOA-NAT-LOT-20021
5	
6	
7	
8	
9	

6TH OF OCTOBER CITY RAIL TRANSIT MONORAIL

The Authority — Hill International Consultant — Main Contractor — Structural Designer

KEY PLAN:

REV.	DATE	DSG	CHK	APP	AMENDMENTS	STATUS
B	12/05/2023	M.KH	M.KH	DR.M.M	ISSUED FOR INFORMATION	IFI
A	11/20/2022	M.KH	M.KH	DR.M.M	ISSUED FOR INFORMATION	IFI

SCALE: AS SHOWN | SHOPDRAWING | DATE: 12/05/2023

DRAWING TITLE
6TH OF OCTOBER MONORAIL
SERVICE WALKWAYS
ZONE (1008)
W646

Project Code	Rubric	Initiator	Lot	Ref	Number	Revision
93M	047	ACC	60	DEP	DWG	08777	B

Tekla structures

approval is subject to approval of coordination package between multi-discipline

REVIEWED WITH COMMENT
MONORAILS PROJECT

All holes are 22mm U.N.O Length & Area & Weight per piece

Mark	Profile	Grade	QTY	Length	Area	Weight
W645	UPN140	S235JR	1	1000.1	0.49	16.0

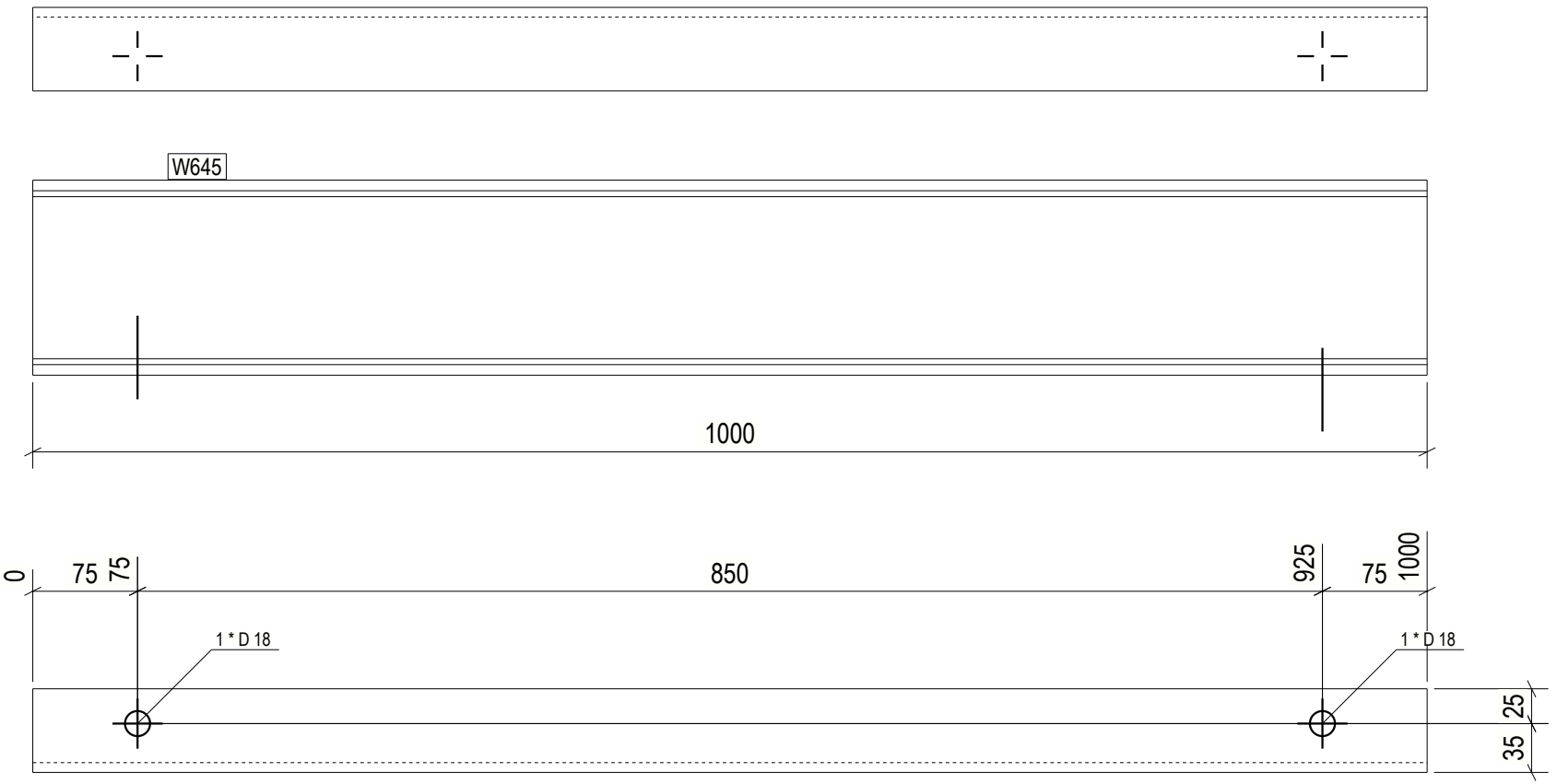

1 REQ'D AS DRAWN MK'D W645

6 October Monorail
Engineering Unit
Valid For Construction

GENERAL NOTES:

1. THE DIMENSIONS SHOWN ARE NOMINAL (IN MILLIMETERS), U.N.O.
2. WELD SIZESHALL BE AISC MINIMUM OF 6 mm UNLESS NOTED OTHERWISE.
3. ALL FIELD WELDS SHALL BE INSPECTED PER QUALITY ASSURANCE AND SPECIAL INSPECTIONS.

REFERENCE DRAWINGS

1	93M-BOA-NAT-LOT-04833
2	93M-BOA-NAT-LOT-09170
3	93M-BOA-NAT-LOT-01976
4	93M-BOA-NAT-LOT-20021
5	
6	
7	
8	
9	

6TH OF OCTOBER CITY RAIL TRANSIT MONORAIL

The Authority — Hill International Consultant — Main Contractor — Structural Designer

KEY PLAN:

SCALE AS SHOWN | SHOPDRAWING | DATE 12/09/2023

REV	DATE	DSG	CHK	APP	AMENDMENTS	STATUS
B	12/05/2023	M.KH	M.KH	DR.BUM	ISSUED FOR INFORMATION	IFI
A	11/20/2022	M.KH	M.KH	DR.BUM	ISSUED FOR INFORMATION	IFI

DRAWING TITLE
6TH OF OCTOBER MONORAIL SERVICE WALKWAYS ZONE (1008)
W645

Project Code	Rubric	Initiator	Lot	Ref	Number	Revision
9 3 M	0 4 7 6	A C C	6 0 D	E P D	W G 0	8 7 8 B

Tekla structures

approval is subject to approval of coordination package between multi-discipline

REVIEWED WITH COMMENT
MONORAILS PROJECT

All holes are 22mm U.N.O Length & Area & Weight per piece

Mark	Profile	Grade	QTY	Length	Area	Weight
W644	UPN140	S235JR	2	1000.1	0.49	16.0

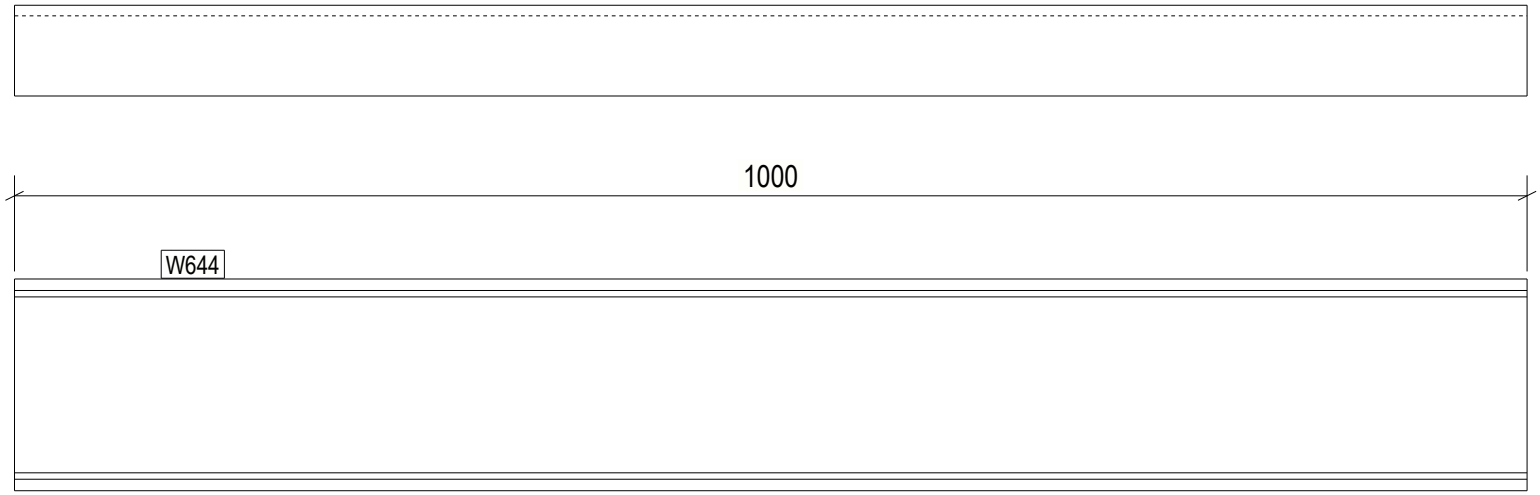

2 REQ'D AS DRAWN MK'D W644

6 October Monorail
Engineering Unit
Valid For Construction

GENERAL NOTES:

1. THE DIMENSIONS SHOWN ARE NOMINAL (IN MILLIMETERS), U.N.O.
2. WELD SIZESHALL BE AISC MINIMUM OF 6 mm UNLESS NOTED OTHERWISE.
3. ALL FIELD WELDS SHALL BE INSPECTED PER QUALITY ASSURANCE AND SPECIAL INSPECTIONS.

REFERENCE DRAWINGS

1	93M-BOA-NAT-LOT-04833
2	93M-BOA-NAT-LOT-09170
3	93M-BOA-NAT-LOT-01976
4	93M-BOA-NAT-LOT-20021
5	
6	
7	
8	
9	

6TH OF OCTOBER CITY RAIL TRANSIT MONORAIL

The Authority — Hill International Consultant — Main Contractor — Structural Designer

KEY PLAN:

SCALE: AS SHOWN | SHOPDRAWING | DATE: 12/09/2023

REV.	DATE	DSG	CHK	APP	AMENDMENTS	STATUS
B	12/05/2023	M.KH	M.KH	DR.M.M	ISSUED FOR INFORMATION	IFI
A	11/20/2022	M.KH	M.KH	DR.M.M	ISSUED FOR INFORMATION	IFI

DRAWING TITLE

6TH OF OCTOBER MONORAIL
SERVICE WALKWAYS
ZONE (1008)
W644

Project Code	Rubric	Initiator	Lot	Ref	Number	Revision
9 3 M	0 4 7 6	A C C	6 0 D	E P	D W G	0 8 8 7 9	B

Tekla structures

approval is subject to approval of coordination package between multi-discipline

REVIEWED WITH COMMENT
MONORAILS PROJECT

All holes are 22mm U.N.O Length & Area & Weight per piece

Mark	Profile	Grade	QTY	Length	Area	Weight
W643	L70*7	S235JR	1	985.9	0.28	7.2

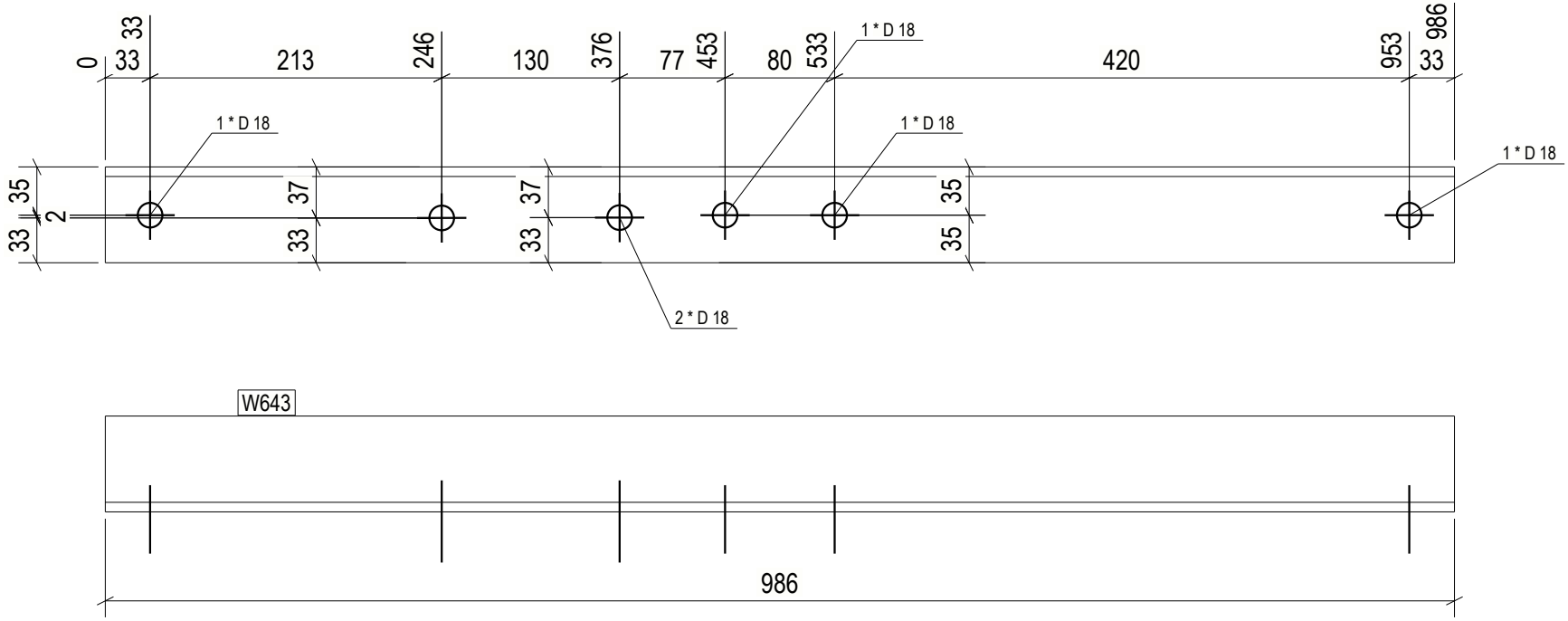

1 REQ'D AS DRAWN MK'D W643

6 October Monorail
Engineering Unit
Valid For Construction

GENERAL NOTES:

1. THE DIMENSIONS SHOWN ARE NOMINAL (IN MILLIMETERS), U.N.O.
2. WELD SIZESHALL BE AISC MINIMUM OF 6 mm UNLESS NOTED OTHERWISE.
3. ALL FIELD WELDS SHALL BE INSPECTED PER QUALITY ASSURANCE AND SPECIAL INSPECTIONS.

REFERENCE DRAWINGS

1	93M-BOA-NAT-LOT-04833
2	93M-BOA-NAT-LOT-09170
3	93M-BOA-NAT-LOT-01976
4	93M-BOA-NAT-LOT-20021
5	
6	
7	
8	
9	

6TH OF OCTOBER CITY RAIL TRANSIT MONORAIL

The Authority | Hill International Consultant | Main Contractor | Structural Designer

KEY PLAN:

REV.	DATE	DSG	CHK	APP	AMENDMENTS	STATUS
B	12/05/2023	M.KH	M.KH	DR.BM	ISSUED FOR INFORMATION	IFI
A	11/20/2022	M.KH	M.KH	DR.BM	ISSUED FOR INFORMATION	IFI

SCALE: AS SHOWN | SHOPDRAWING | DATE: 12/05/2023

DRAWING TITLE
6TH OF OCTOBER MONORAIL
SERVICE WALKWAYS
ZONE (1008)
W643

Project Code	Rubric	Initiator	Lot	Ref	Number	Revision
9 3 M	0 4 7 6	A C C	6 0 D	E P D	W G 0	8 8 8 0	B

Tekla structures

approval is subject to approval of coordination package between multi-discipline

REVIEWED WITH COMMENT
MONORAILS PROJECT

All holes are 22mm U.N.O Length & Area & Weight per piece

Mark	Profile	Grade	QTY	Length	Area	Weight
W642	UPN220	S235JR	1	3975.4	2.86	116.7

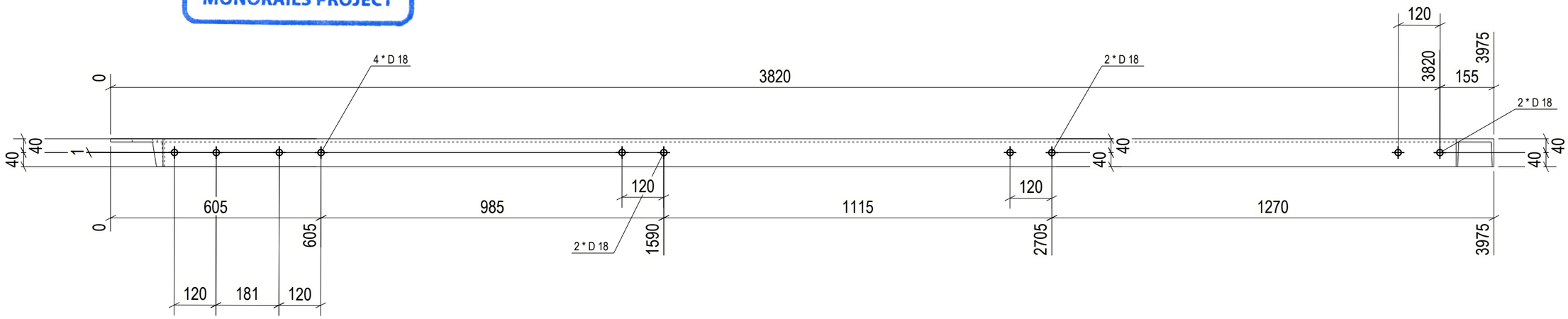

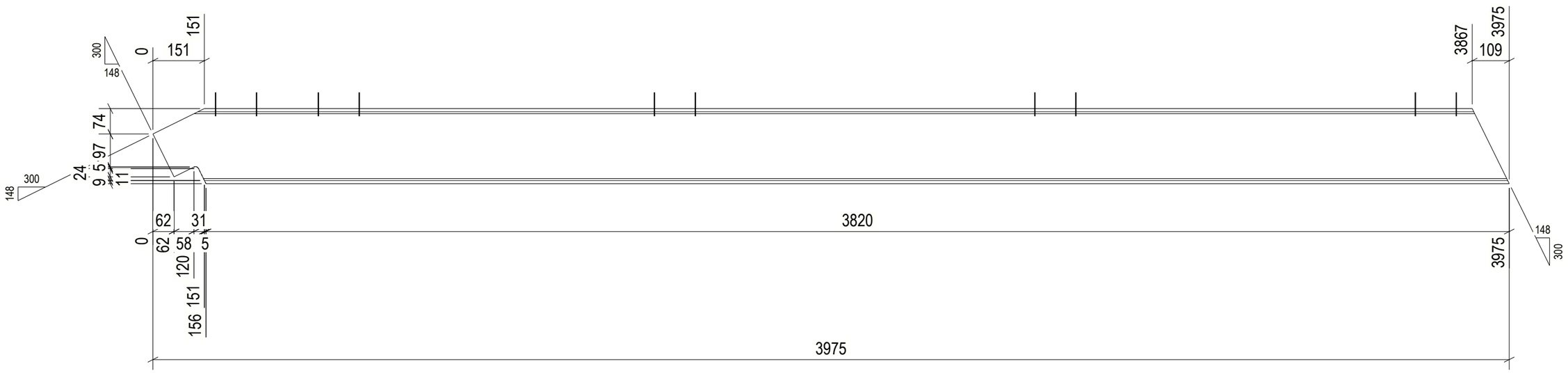

1 REQ'D AS DRAWN MK'D W642

GENERAL NOTES:

1. THE DIMENSIONS SHOWN ARE NOMINAL (IN MILLIMETERS), U.N.O.
2. WELD SIZESHALL BE AISC MINIMUM OF 6 mm UNLESS NOTED OTHERWISE.
3. ALL FIELD WELDS SHALL BE INSPECTED PER QUALITY ASSURANCE AND SPECIAL INSPECTIONS.

REFERENCE DRAWINGS

1	93M-BOA-NAT-LOT-04833
2	93M-BOA-NAT-LOT-09170
3	93M-BOA-NAT-LOT-01976
4	93M-BOA-NAT-LOT-20021
5	
6	
7	
8	
9	

6TH OF OCTOBER CITY RAIL TRANSIT MONORAIL

The Authority — Hill International Consultant — Main Contractor — Structural Designer

KEY PLAN:

6 October Monorail Engineering Unit Valid For Construction

SCALE: AS SHOWN | SHOP DRAWING | DATE: 12/05/2023

REV	DATE	DSN	CHK	APP	AMENDMENTS DESCRIPTION	STATUS
B	12/05/2023	M.KH	M.KH	DR.M.M	ISSUED FOR INFORMATION	IFI

DRAWING TITLE

6TH OF OCTOBER MONORAIL
SERVICE WALKWAYS
ZONE (1008)
W642

Project Code	Rubric	Initiator	Lot	Ref	Number	Revision
93	M047	ACC60	DEP	DWG	0888	1 B

Tekla structures

approval is subject to approval of coordination package between multi-discipline

REVIEWED WITH COMMENT
MONORAILS PROJECT

All holes are 22mm U.N.O Length & Area & Weight per piece						
W641	UPN220	S235JR	1	3975.1	2.86	116.7
Mark	Profile	Grade	QTY	Length	Area	Weight

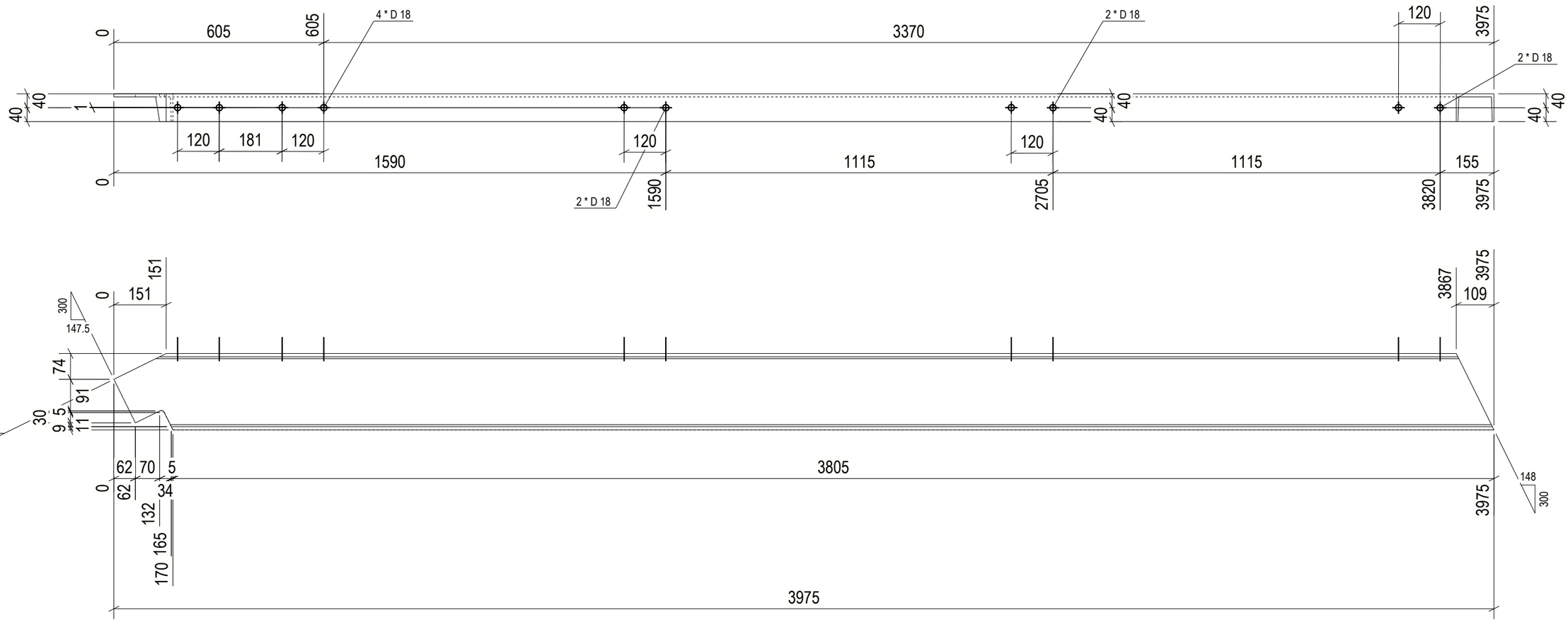

1 REQ'D AS DRAWN MK'D W641

GENERAL NOTES:

1. THE DIMENSIONS SHOWN ARE NOMINAL (IN MILLIMETERS), U.N.O.
2. WELD SIZESHALL BE AISC MINIMUM OF 6 mm UNLESS NOTED OTHERWISE.
3. ALL FIELD WELDS SHALL BE INSPECTED PER QUALITY ASSURANCE AND SPECIAL INSPECTIONS.

REFERENCE DRAWINGS

1	93M-BOA-NAT-LOT-04833
2	93M-BOA-NAT-LOT-09170
3	93M-BOA-NAT-LOT-01976
4	93M-BOA-NAT-LOT-20021
5	
6	
7	
8	
9	

6TH OF OCTOBER CITY RAIL TRANSIT MONORAIL

The Authority — Hill International Consultant — Main Contractor — Structural Designer

KEY PLAN:

6 October Monorail Engineering Unit Valid For Construction

SCALE	SHOP DRAWING	DATE
AS SHOWN		12/05/2023

REV	DATE	DSN	CHK	APP	AMENDMENT DESCRIPTION	STATUS
B	12/05/2023	M.KH	M.KH	DR.M.M	ISSUED FOR INFORMATION	IFI

DRAWING TITLE

6TH OF OCTOBER MONORAIL SERVICE WALKWAYS ZONE (1008)
W641

Project Code	Rubric	Initiator	Lot	Ref	Number	Revision
9 3 M	0 4 7 6	A C C	6 0 D E P	D W G	0 8 8 8 2	B

Tekla structures

approval is subject to approval of coordination package between multi-discipline

REVIEWED WITH COMMENT
MONORAILS PROJECT

All holes are 22mm U.N.O Length & Area & Weight per piece

Mark	Profile	Grade	QTY	Length	Area	Weight
W638	CHS48.3*4.0	S235JR	2	311.6	0.05	1.4

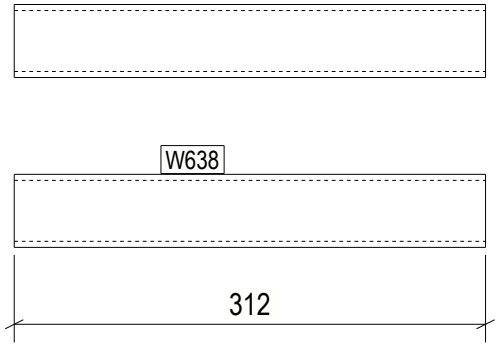

2 REQ'D AS DRAWN MK'D W638

6 October Monorail
Engineering Unit
Valid For Construction

GENERAL NOTES:

1. THE DIMENSIONS SHOWN ARE NOMINAL (IN MILLIMETERS), U.N.O.
2. WELD SIZESHALL BE AISC MINIMUM OF 6 mm UNLESS NOTED OTHERWISE.
3. ALL FIELD WELDS SHALL BE INSPECTED PER QUALITY ASSURANCE AND SPECIAL INSPECTIONS.

REFERENCE DRAWINGS

1	93M-BOA-NAT-LOT-04833
2	93M-BOA-NAT-LOT-09170
3	93M-BOA-NAT-LOT-01976
4	93M-BOA-NAT-LOT-20021
5	
6	
7	
8	
9	

6TH OF OCTOBER CITY RAIL TRANSIT MONORAIL

The Authority | Hill International Consultant | Main Contractor | Structural Designer

KEY PLAN:

REV.	DATE	DSG	CHK	APP	AMENDMENTS	STATUS
B	12/05/2023	M.KH	M.KH	DR.BIM	ISSUED FOR INFORMATION	IFI
A	11/20/2022	M.KH	M.KH	DR.BIM	ISSUED FOR INFORMATION	IFI

SCALE: AS SHOWN | SHOPDRAWING | DATE: 12/05/2023

DRAWING TITLE
6TH OF OCTOBER MONORAIL
SERVICE WALKWAYS
ZONE (1008)
W638

Project Code	Rubric	Initiator	Lot	Ref	Number	Revision
9 3 M	0 4 7 6	A C C	6 0 D	E P	D W G	0 8 8 8 3	B

Tekla structures

approval is subject to approval of coordination package between multi-discipline

REVIEWED WITH COMMENT
MONORAILS PROJECT

All holes are 22mm U.N.O Length & Area & Weight per piece						
W628	UPN160	S235JR	2	5920.0	3.26	111.5
Mark	Profile	Grade	QTY	Length	Area	Weight

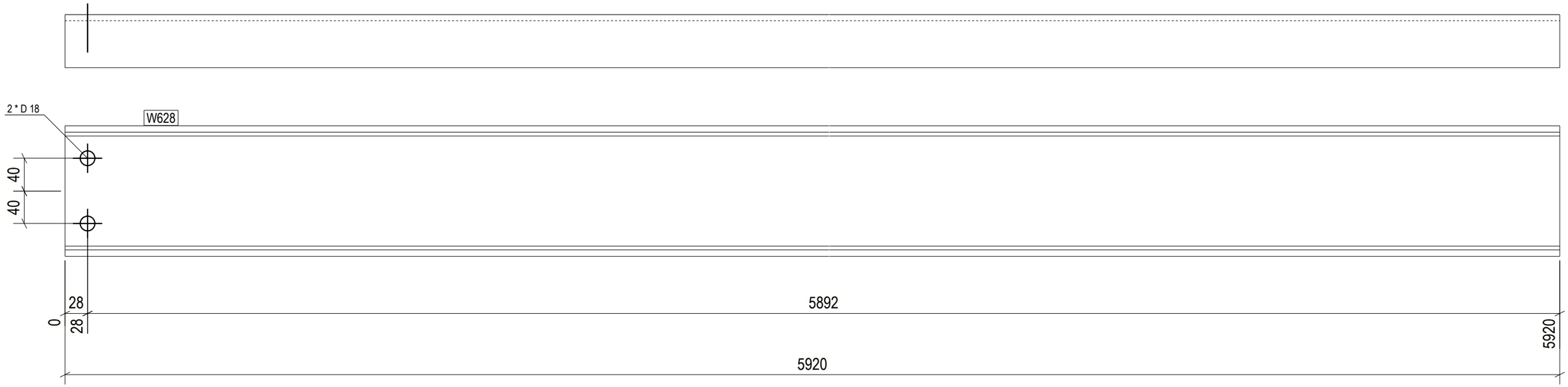

2 REQ'D AS DRAWN MK'D W628

6 October Monorail
Engineering Unit
Valid For Construction

GENERAL NOTES:

1. THE DIMENSIONS SHOWN ARE NOMINAL (IN MILLIMETERS), U.N.O.
2. WELD SIZESHALL BE AISC MINIMUM OF 6 mm UNLESS NOTED OTHERWISE.
3. ALL FIELD WELDS SHALL BE INSPECTED PER QUALITY ASSURANCE AND SPECIAL INSPECTIONS.

REFERENCE DRAWINGS

1	93M-BOA-NAT-LOT-04833
2	93M-BOA-NAT-LOT-09170
3	93M-BOA-NAT-LOT-01976
4	93M-BOA-NAT-LOT-20021
5	
6	
7	
8	
9	

6TH OF OCTOBER CITY RAIL TRANSIT MONORAIL

The Authority — Hill International Consultant — Main Contractor — Structural Designer

KEY PLAN:

SCALE: AS SHOWN

SHOP DRAWING

DATE: 12/05/2023

REV	DATE	DSN	CHK	APP	AMENDMENTS DESCRIPTION	STATUS
B	12/05/2023	M.KH	M.KH	DR.M.M	ISSUED FOR INFORMATION	IFI

DRAWING TITLE

6TH OF OCTOBER MONORAIL
SERVICE WALKWAYS
ZONE (1008)
W628

Project Code	Rubric	Initiator	Lot	Ref	Number	Revision
9 3 M	0 4 7 6	A C C	6 0 D E P	D W G	0 8 8 8 4	B

Tekla structures

All holes are 22mm U.N.O Length & Area & Weight per piece						
W625	UPN160	S235JR	2	4144.0	2.28	78.1
Mark	Profile	Grade	QTY	Length	Area	Weight

approval is subject to approval of coordination package between multi-discipline

REVIEWED WITH COMMENT MONORAILS PROJECT

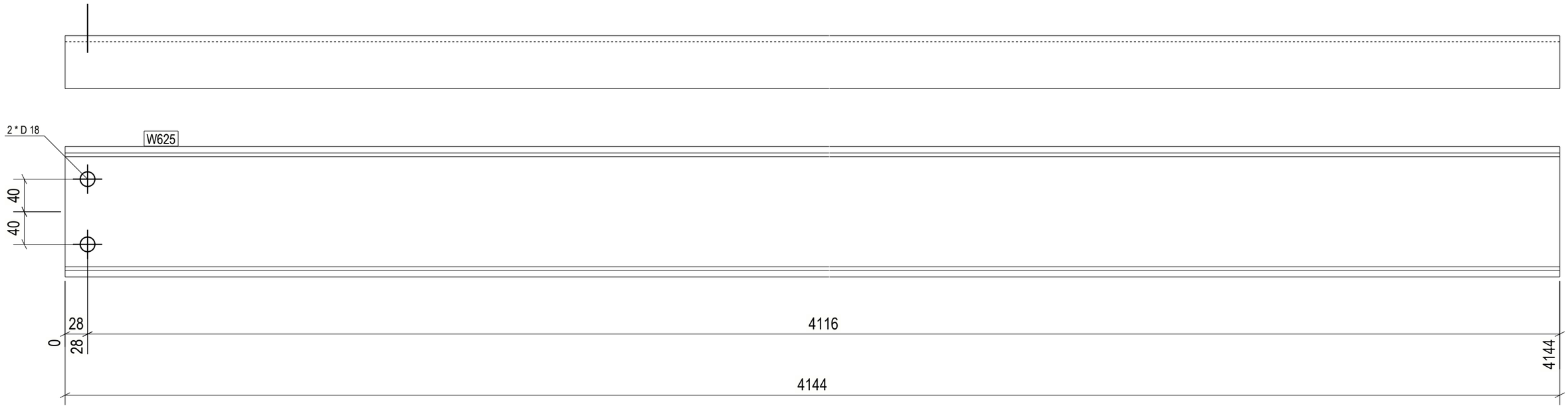

2 REQ'D AS DRAWN MK'D W625

6 October Monorail Engineering Unit
Valid For Construction

GENERAL NOTES:

1. THE DIMENSIONS SHOWN ARE NOMINAL (IN MILLIMETERS), U.N.O.
2. WELD SIZESHALL BE AISC MINIMUM OF 6 mm UNLESS NOTED OTHERWISE.
3. ALL FIELD WELDS SHALL BE INSPECTED PER QUALITY ASSURANCE AND SPECIAL INSPECTIONS.

REFERENCE DRAWINGS

1	93M-BOA-NAT-LOT-04833
2	93M-BOA-NAT-LOT-09170
3	93M-BOA-NAT-LOT-01976
4	93M-BOA-NAT-LOT-20021
5	
6	
7	
8	
9	

6TH OF OCTOBER CITY RAIL TRANSIT MONORAIL

The Authority | Hill International Consultant | ORASCOM BOMBARDIER Main Contractor | INNOVA Structural Designer

KEY PLAN:

SCALE	SHOP DRAWING	DATE
AS SHOWN		12/05/2023

REV	DATE	DSG	CHK	APP	AMENDMENTS	STATUS
B	12/05/2023	M.KH	M.KH	DR.M.M	ISSUED FOR INFORMATION	IFI

DRAWING TITLE

6TH OF OCTOBER MONORAIL SERVICE WALKWAYS ZONE (1008) W625

Project Code	Rubric	Initiator	Lot	Ref	Number	Revision
93M	0476	ACC	60DEP	DWG	08885	B

Tekla structures

approval is subject to approval of coordination package between multi-discipline

REVIEWED WITH COMMENT
MONORAILS PROJECT

All holes are 22mm U.N.O Length & Area & Weight per piece

Mark	Profile	Grade	QTY	Length	Area	Weight
W624	UPN160	S235JR	2	2368.0	1.30	44.6

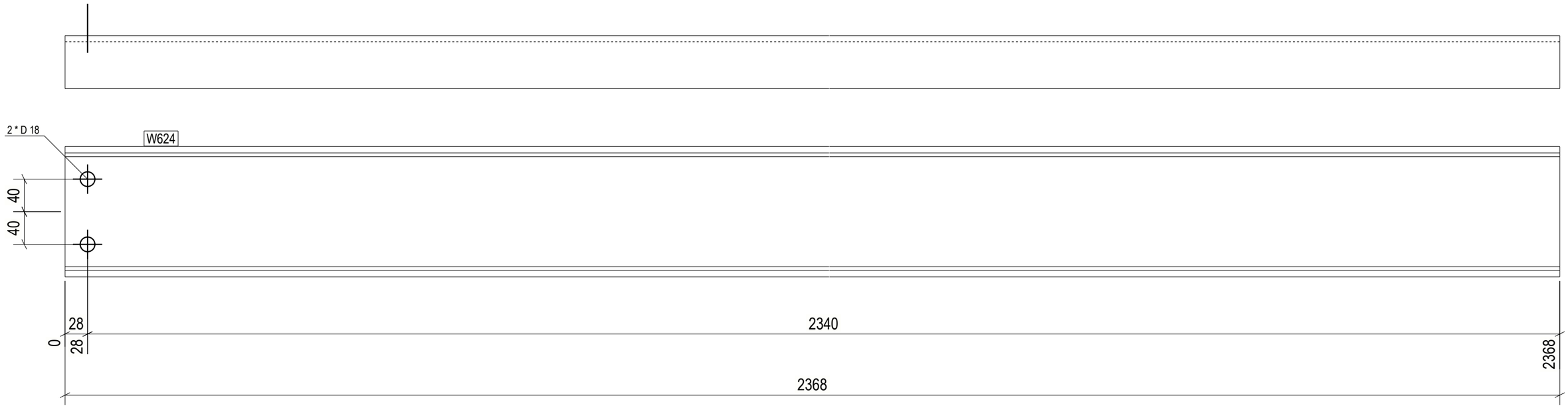

2 REQ'D AS DRAWN MK'D W624

GENERAL NOTES:

1. THE DIMENSIONS SHOWN ARE NOMINAL (IN MILLIMETERS), U.N.O.
2. WELD SIZESHALL BE AISC MINIMUM OF 6 mm UNLESS NOTED OTHERWISE.
3. ALL FIELD WELDS SHALL BE INSPECTED PER QUALITY ASSURANCE AND SPECIAL INSPECTIONS.

REFERENCE DRAWINGS

1	93M-BOA-NAT-LOT-04833
2	93M-BOA-NAT-LOT-09170
3	93M-BOA-NAT-LOT-01976
4	93M-BOA-NAT-LOT-20021
5	
6	
7	
8	
9	

6TH OF OCTOBER CITY RAIL TRANSIT MONORAIL

The Authority — Hill International Consultant — Main Contractor — Structural Designer

KEY PLAN:

6 October Monorail
Engineering Unit
Valid For Construction

SCALE	SHOP DRAWING	DATE
AS SHOWN		12/05/2023

REV	DATE	DSN	CHK	APP	AMENDMENTS/REVISION	STATUS
B	12/05/2023	M.KH	M.KH	DR.M.M	ISSUED FOR INFORMATION	IFI
A	12/04/2022	D.SH	CHK	APP	AMENDMENTS/REVISION	STATUS

DRAWING TITLE

6TH OF OCTOBER MONORAIL
SERVICE WALKWAYS
ZONE (1008)
W624

Project Code	Rubric	Initiator	Lot	Ref	Number	Revision
93M	047	6ACC	60DE	PDWG	08886	B

Tekla structures

approval is subject to approval of coordination package between multi-discipline

REVIEWED WITH COMMENT MONORAILS PROJECT

All holes are 22mm U.N.O Length & Area & Weight per piece						
W614	CHS48.3*4.0	S235JR	4	89.5	0.01	0.4
Mark	Profile	Grade	QTY	Length	Area	Weight

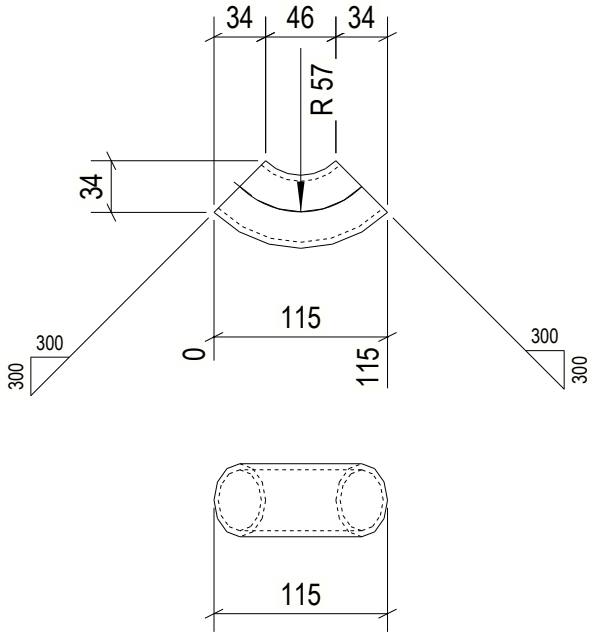

4 REQ'D AS DRAWN MK'D W614

6 October Monorail Engineering Unit
Valid For Construction

GENERAL NOTES:

1. THE DIMENSIONS SHOWN ARE NOMINAL (IN MILLIMETERS), U.N.O.
2. WELD SIZESHALL BE AISC MINIMUM OF 6 mm UNLESS NOTED OTHERWISE.
3. ALL FIELD WELDS SHALL BE INSPECTED PER QUALITY ASSURANCE AND SPECIAL INSPECTIONS.

REFERENCE DRAWINGS

1	93M-BOA-NAT-LOT-04833
2	93M-BOA-NAT-LOT-09170
3	93M-BOA-NAT-LOT-01976
4	93M-BOA-NAT-LOT-20021
5	
6	
7	
8	
9	

6TH OF OCTOBER CITY RAIL TRANSIT MONORAIL

The Authority — Hill International Consultant — Main Contractor — Structural Designer

KEY PLAN:

SCALE	SHOPDRAWING	DATE
AS SHOWN		12/05/2023

REV	DATE	DSG	CHK	APP	AMENDMENTS	STATUS
B	12/05/2023	M.KH	M.KH	DR.M.M	ISSUED FOR INFORMATION	IFI
A	11/20/2022	M.KH	M.KH	DR.M.M	ISSUED FOR INFORMATION	IFI

DRAWING TITLE

6TH OF OCTOBER MONORAIL SERVICE WALKWAYS ZONE (1008)
W614

Project Code	Rubric	Initiator	Lot	Ref	Number	Revision
9 3 M	0 4 7 6	A C C	6 0 D E P	D W G	0 8 8 8 7	B

Tekla structures

approval is subject to approval of coordination package between multi-discipline

REVIEWED WITH COMMENT
MONORAILS PROJECT

All holes are 22mm U.N.O Length & Area & Weight per piece

Mark	Profile	Grade	QTY	Length	Area	Weight
W613	PL8*167.5	S355JR	1	228.3	0.06	1.7

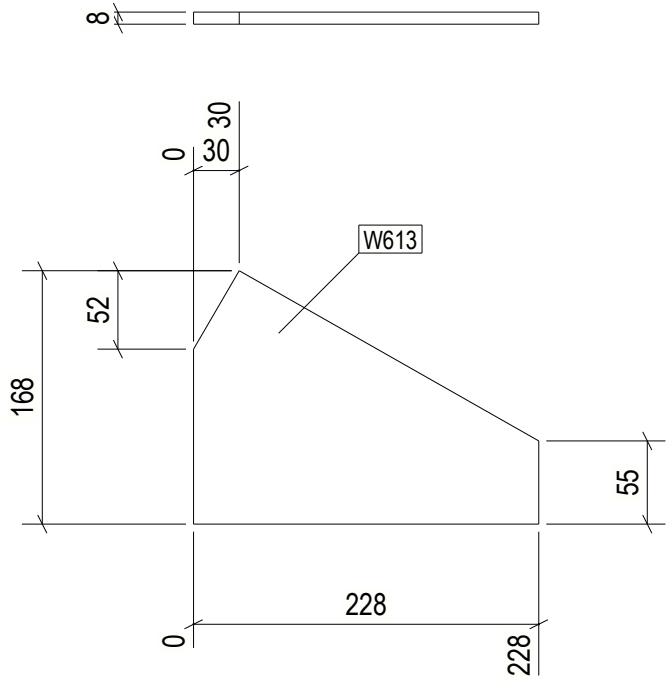

1 REQ'D AS DRAWN MK'D W613

6 October Monorail
Engineering Unit
Valid For Construction

GENERAL NOTES:

1. THE DIMENSIONS SHOWN ARE NOMINAL (IN MILLIMETERS), U.N.O.
2. WELD SIZESHALL BE AISC MINIMUM OF 6 mm UNLESS NOTED OTHERWISE.
3. ALL FIELD WELDS SHALL BE INSPECTED PER QUALITY ASSURANCE AND SPECIAL INSPECTIONS.

REFERENCE DRAWINGS

1	93M-BOA-NAT-LOT-04833
2	93M-BOA-NAT-LOT-09170
3	93M-BOA-NAT-LOT-01976
4	93M-BOA-NAT-LOT-20021
5	
6	
7	
8	
9	

6TH OF OCTOBER CITY RAIL TRANSIT MONORAIL

The Authority | Hill International Consultant | Main Contractor | Structural Designer

KEY PLAN:

REV.	DATE	DSG	CHK	APP	AMENDMENTS	STATUS
B	12/05/2023	M.KH	M.KH	DR.M.M	ISSUED FOR INFORMATION	IFI
A	11/20/2022	M.KH	M.KH	DR.M.M	ISSUED FOR INFORMATION	IFI

SCALE AS SHOWN | SHOPDRAWING | DATE 12/05/2023

DRAWING TITLE
6TH OF OCTOBER MONORAIL
SERVICE WALKWAYS
ZONE (1008)
W613

Project Code	Rubric	Initiator	Lot	Ref	Number	Revision
9 3 M 0 4 7 6	A C C	6 0 D	E P	D W G	0 8 8 8 8	B

Tekla structures

approval is subject to approval of coordination package between multi-discipline

REVIEWED WITH COMMENT
MONORAILS PROJECT

All holes are 22mm U.N.O Length & Area & Weight per piece

Mark	Profile	Grade	QTY	Length	Area	Weight
W612	PL8*162.7	S355-JR	1	220.9	0.06	1.6

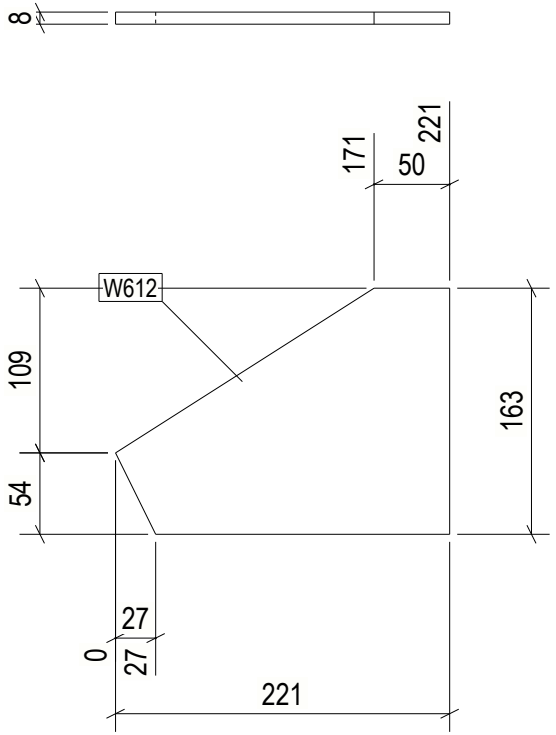

1 REQ'D AS DRAWN MK'D W612

6 October Monorail
Engineering Unit
Valid For Construction

GENERAL NOTES:

1. THE DIMENSIONS SHOWN ARE NOMINAL (IN MILLIMETERS), U.N.O.
2. WELD SIZESHALL BE AISC MINIMUM OF 6 mm UNLESS NOTED OTHERWISE.
3. ALL FIELD WELDS SHALL BE INSPECTED PER QUALITY ASSURANCE AND SPECIAL INSPECTIONS.

REFERENCE DRAWINGS

1	93M-BOA-NAT-LOT-04833
2	93M-BOA-NAT-LOT-09170
3	93M-BOA-NAT-LOT-01976
4	93M-BOA-NAT-LOT-20021
5	
6	
7	
8	
9	

6TH OF OCTOBER CITY RAIL TRANSIT MONORAIL

The Authority | Hill International Consultant | Main Contractor | Structural Designer

KEY PLAN:

REV.	DATE	DSG	CHK	APP	AMENDMENTS	STATUS
B	12/05/2023	M.KH	M.KH	DR.BM	ISSUED FOR INFORMATION	IFI
A	11/20/2022	M.KH	M.KH	DR.BM	ISSUED FOR INFORMATION	IFI

SCALE: AS SHOWN | SHOPDRAWING | DATE: 12/05/2023

DRAWING TITLE
6TH OF OCTOBER MONORAIL
SERVICE WALKWAYS
ZONE (1008)
W612

Project Code	Rubric	Initiator	Lot	Ref	Number	Revision
9 3 M 0 4 7 6	A C C	6 0 D	m P	D W G	0 8 8 8 9	B

Tekla structures

approval is subject to approval of coordination package between multi-discipline

REVIEWED WITH COMMENT
MONORAILS PROJECT

All holes are 22mm U.N.O Length & Area & Weight per piece

Mark	Profile	Grade	QTY	Length	Area	Weight
W611	PL12*65	S355JR	3	190.0	0.03	1.2

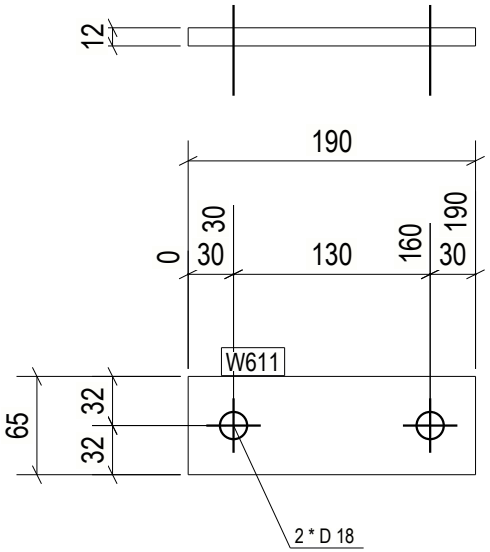

3 REQ'D AS DRAWN MK'D W611

6 October Monorail
Engineering Unit
Valid For Construction

GENERAL NOTES:

1. THE DIMENSIONS SHOWN ARE NOMINAL (IN MILLIMETERS), U.N.O.
2. WELD SIZESHALL BE AISC MINIMUM OF 6 mm UNLESS NOTED OTHERWISE.
3. ALL FIELD WELDS SHALL BE INSPECTED PER QUALITY ASSURANCE AND SPECIAL INSPECTIONS.

REFERENCE DRAWINGS

1	93M-BOA-NAT-LOT-04833
2	93M-BOA-NAT-LOT-09170
3	93M-BOA-NAT-LOT-01976
4	93M-BOA-NAT-LOT-20021
5	
6	
7	
8	
9	

6TH OF OCTOBER CITY RAIL TRANSIT MONORAIL

The Authority | Hill International Consultant | Main Contractor | Structural Designer

KEY PLAN:

REV.	DATE	DSG	CHK	APP	AMENDMENTS	STATUS
B	12/05/2023	M.KH	M.KH	DR.BIM	ISSUED FOR INFORMATION	IFI
A	11/20/2022	M.KH	M.KH	DR.BIM	ISSUED FOR INFORMATION	IFI

SCALE: AS SHOWN | SHOPDRAWING | DATE: 12/05/2023

DRAWING TITLE
6TH OF OCTOBER MONORAIL
SERVICE WALKWAYS
ZONE (1008)
W611

Project Code	Rubric	Initiator	Lot	Ref	Number	Revision
9 3 M 0 4 7 6	A C C	6 0 D	E P	D W G	0 8 8 9 0	B

Tekla structures

approval is subject to approval of coordination package between multi-discipline

REVIEWED WITH COMMENT
MONORAILS PROJECT

All holes are 22mm U.N.O Length & Area & Weight per piece

Mark	Profile	Grade	QTY	Length	Area	Weight
W610	PL8*124.7	S355JR	1	307.5	0.05	1.4

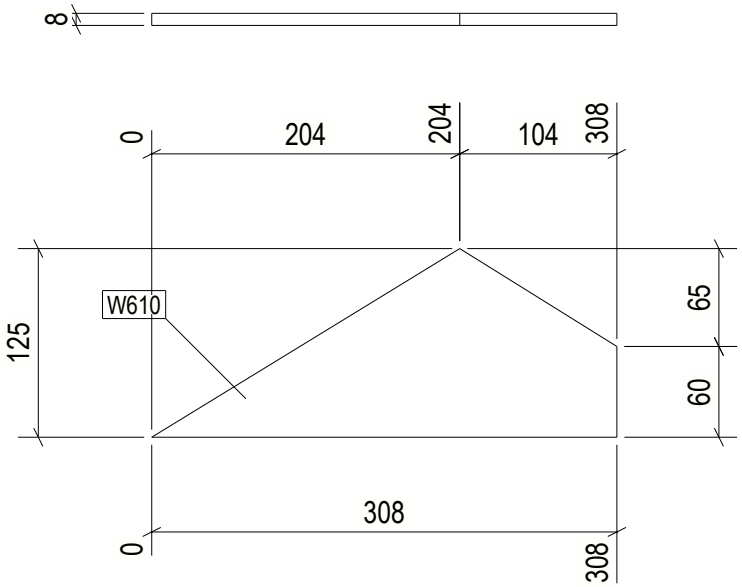

1 REQ'D AS DRAWN MK'D W610

6 October Monorail
Engineering Unit
Valid For Construction

GENERAL NOTES:

1. THE DIMENSIONS SHOWN ARE NOMINAL (IN MILLIMETERS), U.N.O.
2. WELD SIZESHALL BE AISC MINIMUM OF 6 mm UNLESS NOTED OTHERWISE.
3. ALL FIELD WELDS SHALL BE INSPECTED PER QUALITY ASSURANCE AND SPECIAL INSPECTIONS.

REFERENCE DRAWINGS

1	93M-BOA-NAT-LOT-04833
2	93M-BOA-NAT-LOT-09170
3	93M-BOA-NAT-LOT-01976
4	93M-BOA-NAT-LOT-20021
5	
6	
7	
8	
9	

6TH OF OCTOBER CITY RAIL TRANSIT MONORAIL

The Authority | Hill International Consultant | Main Contractor | Structural Designer

KEY PLAN:

SCALE: AS SHOWN | SHOPDRAWING | DATE: 12/09/2023

REV.	DATE	DSG	CHK	APP	AMENDMENTS	STATUS
B	12/05/2023	M.KH	M.KH	DR.M.M	ISSUED FOR INFORMATION	IFI
A	11/20/2022	M.KH	M.KH	DR.M.M	ISSUED FOR INFORMATION	IFI

DRAWING TITLE
6TH OF OCTOBER MONORAIL
SERVICE WALKWAYS
ZONE (1008)
W610

Project Code	Rubric	Initiator	Lot	Ref	Number	Revision
9 3 M	0 4 7 6	A C C	6 0 D	E P	D W G	0 8 9 1	B

Tekla structures

approval is subject to approval of coordination package between multi-discipline

REVIEWED WITH COMMENT
MONORAILS PROJECT

All holes are 22mm U.N.O Length & Area & Weight per piece

Mark	Profile	Grade	QTY	Length	Area	Weight
W609	CHS48.3*4.0	S355-JR	4	64.1	0.01	0.3

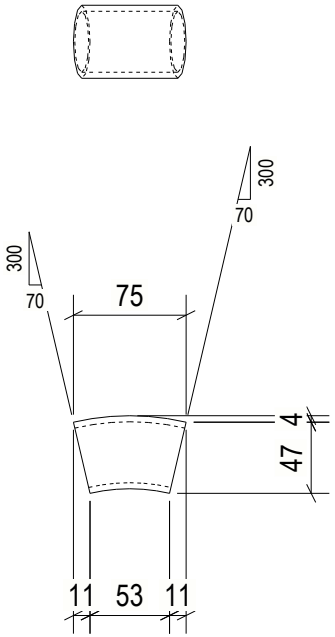

4 REQ'D AS DRAWN MK'D W609

6 October Monorail
Engineering Unit
Valid For Construction

Tekla structures

GENERAL NOTES:

1. THE DIMENSIONS SHOWN ARE NOMINAL (IN MILLIMETERS), U.N.O.
2. WELD SIZESHALL BE AISC MINIMUM OF 6 mm UNLESS NOTED OTHERWISE.
3. ALL FIELD WELDS SHALL BE INSPECTED PER QUALITY ASSURANCE AND SPECIAL INSPECTIONS.

REFERENCE DRAWINGS

1	93M-BOA-NAT-LOT-04833
2	93M-BOA-NAT-LOT-09170
3	93M-BOA-NAT-LOT-01976
4	93M-BOA-NAT-LOT-20021
5	
6	
7	
8	
9	

6TH OF OCTOBER CITY RAIL TRANSIT MONORAIL

The Authority | Hill International Consultant | Main Contractor | Structural Designer

KEY PLAN:

REV.	DATE	DSG	CHK	APP	AMENDMENTS	STATUS
B	12/05/2023	M.KH	M.KH	DR.M.M	ISSUED FOR INFORMATION	IFI
A	11/20/2022	M.KH	M.KH	DR.M.M	ISSUED FOR INFORMATION	IFI

SCALE: AS SHOWN | SHOPDRAWING | DATE: 12/05/2023

DRAWING TITLE
6TH OF OCTOBER MONORAIL
SERVICE WALKWAYS
ZONE (1008)
W609

Project Code	Rubric	Initiator	Lot	Ref	Number	Revision
9 3 M	0 4 7 6	A C C	6 0 D	E P	D W G	0 8 9 2	B

approval is subject to approval of coordination package between multi-discipline

REVIEWED WITH COMMENT
MONORAILS PROJECT

All holes are 22mm U.N.O Length & Area & Weight per piece

Mark	Profile	Grade	QTY	Length	Area	Weight
W608	CHS48.3*4.0	S355-JR	1	75.4	0.01	0.3

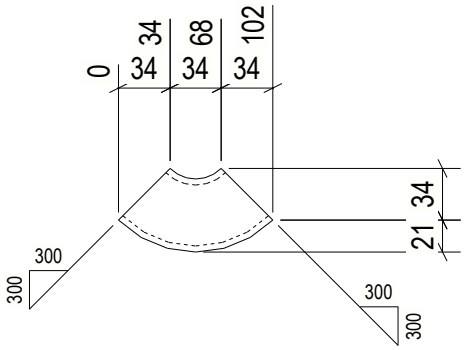

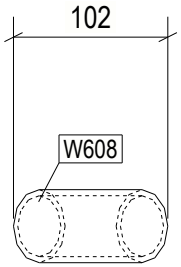

1 REQ'D AS DRAWN MK'D W608

6 October Monorail
Engineering Unit
Valid For Construction

GENERAL NOTES:

1. THE DIMENSIONS SHOWN ARE NOMINAL (IN MILLIMETERS), U.N.O.
2. WELD SIZESHALL BE AISC MINIMUM OF 6 mm UNLESS NOTED OTHERWISE.
3. ALL FIELD WELDS SHALL BE INSPECTED PER QUALITY ASSURANCE AND SPECIAL INSPECTIONS.

REFERENCE DRAWINGS

1	93M-BOA-NAT-LOT-04833
2	93M-BOA-NAT-LOT-09170
3	93M-BOA-NAT-LOT-01976
4	93M-BOA-NAT-LOT-20021
5	
6	
7	
8	
9	

6TH OF OCTOBER CITY RAIL TRANSIT MONORAIL

The Authority | Hill International Consultant | Main Contractor | Structural Designer

KEY PLAN:

REV.	DATE	DSG	CHK	APP	AMENDMENTS	STATUS
B	12/05/2023	M.KH	M.KH	DR.M.M	ISSUED FOR INFORMATION	IFI
A	11/20/2022	M.KH	M.KH	DR.M.M	ISSUED FOR INFORMATION	IFI

SCALE AS SHOWN | SHOPDRAWING | DATE 12/05/2023

DRAWING TITLE
6TH OF OCTOBER MONORAIL
SERVICE WALKWAYS
ZONE (1008)
W608

Project Code	Rubric	Initiator	Lot	Ref	Number	Revision
9 3 M	0 4 7 6	A C C	6 0 D	E P	D W G	0 8 8 9 3	B

Tekla structures

approval is subject to approval of coordination package between multi-discipline

REVIEWED WITH COMMENT MONORAILS PROJECT

All holes are 22mm U.N.O Length & Area & Weight per piece						
W607	PL8*125.8	S355JR	2	185.1	0.04	1.0
Mark	Profile	Grade	QTY	Length	Area	Weight

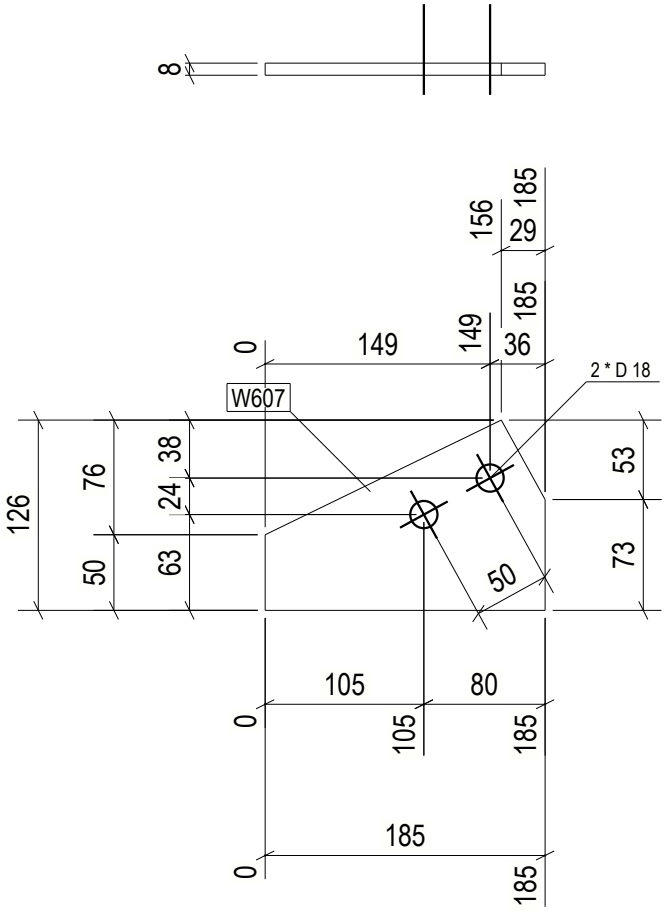

2 REQ'D AS DRAWN MK'D W607

6 October Monorail Engineering Unit
Valid For Construction

GENERAL NOTES:

1. THE DIMENSIONS SHOWN ARE NOMINAL (IN MILLIMETERS), U.N.O.
2. WELD SIZESHALL BE AISC MINIMUM OF 6 mm UNLESS NOTED OTHERWISE.
3. ALL FIELD WELDS SHALL BE INSPECTED PER QUALITY ASSURANCE AND SPECIAL INSPECTIONS.

REFERENCE DRAWINGS

1	93M-BOA-NAT-LOT-04833
2	93M-BOA-NAT-LOT-09170
3	93M-BOA-NAT-LOT-01976
4	93M-BOA-NAT-LOT-20021
5	
6	
7	
8	
9	

6TH OF OCTOBER CITY RAIL TRANSIT MONORAIL

The Authority — Hill International Consultant — Main Contractor — Structural Designer

KEY PLAN:

SCALE	SHOPDRAWING	DATE
AS SHOWN		12/05/2023

REV	DATE	DSG	CHK	APP	AMENDMENTS	STATUS
B	12/05/2023	M.KH	M.KH	DR.M.M	ISSUED FOR INFORMATION	IFI
A	11/20/2022	M.KH	M.KH	DR.M.M	ISSUED FOR INFORMATION	IFI

DRAWING TITLE

6TH OF OCTOBER MONORAIL SERVICE WALKWAYS ZONE (1008) W607

Project Code	Rubric	Initiator	Lot	Ref	Number	Revision
93M	0476	ACC	60DEP	DWG	0894	B

Tekla structures

approval is subject to approval of coordination package between multi-discipline

REVIEWED WITH COMMENT
MONORAILS PROJECT

All holes are 22mm U.N.O Length & Area & Weight per piece

Mark	Profile	Grade	QTY	Length	Area	Weight
W606	PL8*170	S355JR	1	261.9	0.07	1.9

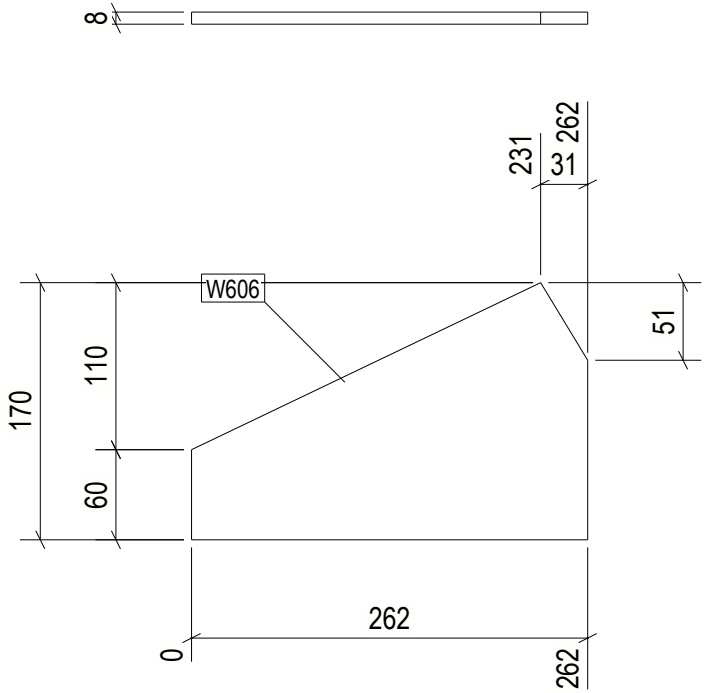

1 REQ'D AS DRAWN MK'D W606

6 October Monorail
Engineering Unit
Valid For Construction

GENERAL NOTES:

1. THE DIMENSIONS SHOWN ARE NOMINAL (IN MILLIMETERS), U.N.O.
2. WELD SIZESHALL BE AISC MINIMUM OF 6 mm UNLESS NOTED OTHERWISE.
3. ALL FIELD WELDS SHALL BE INSPECTED PER QUALITY ASSURANCE AND SPECIAL INSPECTIONS.

REFERENCE DRAWINGS

1	93M-BOA-NAT-LOT-04833
2	93M-BOA-NAT-LOT-09170
3	93M-BOA-NAT-LOT-01976
4	93M-BOA-NAT-LOT-20021
5	
6	
7	
8	
9	

6TH OF OCTOBER CITY RAIL TRANSIT MONORAIL

The Authority | Hill International Consultant | Main Contractor | Structural Designer

KEY PLAN:

SCALE	SHOPDRAWING	DATE
AS SHOWN		12/09/2023

REV	DATE	DSG	CHK	APP	AMENDMENTS	STATUS
B	12/05/2023	M.KH	M.KH	DR.M.M	ISSUED FOR INFORMATION	IFI
A	11/20/2022	M.KH	M.KH	DR.M.M	ISSUED FOR INFORMATION	IFI

DRAWING TITLE

6TH OF OCTOBER MONORAIL
SERVICE WALKWAYS
ZONE (1008)
W606

Project Code	Rubric	Initiator	Lot	Ref	Number	Revision
9 3 M	0 4 7 6	A C C	6 0 D	E P	D W G	0 8 8 9 5	B

Tekla structures

approval is subject to approval of coordination package between multi-discipline

REVIEWED WITH COMMENT
MONORAILS PROJECT

All holes are 22mm U.N.O Length & Area & Weight per piece

Mark	Profile	Grade	QTY	Length	Area	Weight
W605	PL8*125.8	S355JR	2	216.4	0.04	1.2

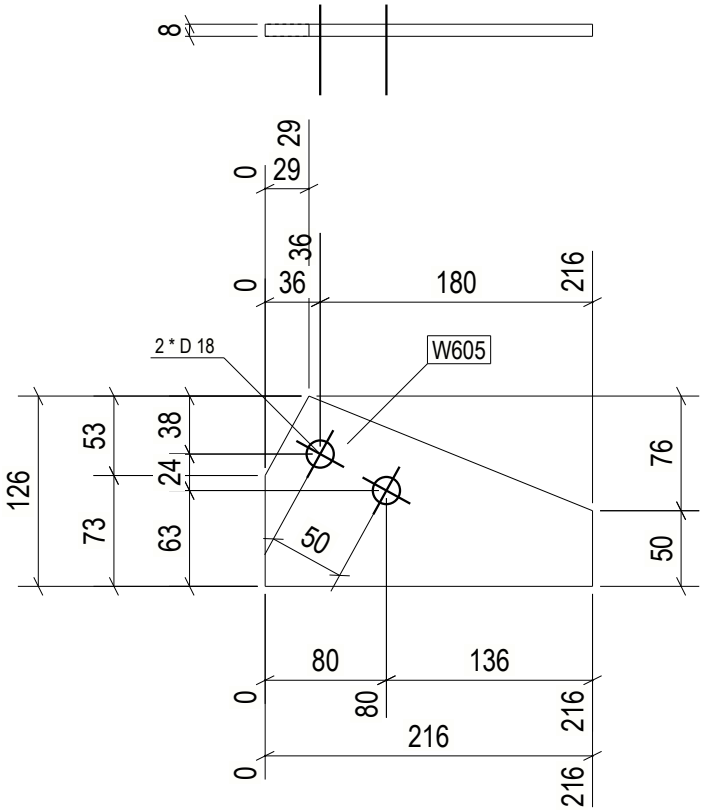

2 REQ'D AS DRAWN MK'D W605

6 October Monorail
Engineering Unit
Valid For Construction

GENERAL NOTES:

1. THE DIMENSIONS SHOWN ARE NOMINAL (IN MILLIMETERS), U.N.O.
2. WELD SIZESHALL BE AISC MINIMUM OF 6 mm UNLESS NOTED OTHERWISE.
3. ALL FIELD WELDS SHALL BE INSPECTED PER QUALITY ASSURANCE AND SPECIAL INSPECTIONS.

REFERENCE DRAWINGS

1	93M-BOA-NAT-LOT-04833
2	93M-BOA-NAT-LOT-09170
3	93M-BOA-NAT-LOT-01976
4	93M-BOA-NAT-LOT-20021
5	
6	
7	
8	
9	

6TH OF OCTOBER CITY RAIL TRANSIT MONORAIL

The Authority | Hill International Consultant | Main Contractor | Structural Designer

KEY PLAN:

SCALE: AS SHOWN | SHOPDRAWING | DATE: 12/09/2023

REV	DATE	DSG	CHK	APP	AMENDMENTS	STATUS
B	12/05/2023	M.KH	M.KH	DR.M.M	ISSUED FOR INFORMATION	IFI
A	11/20/2022	M.KH	M.KH	DR.M.M	ISSUED FOR INFORMATION	IFI

DRAWING TITLE
6TH OF OCTOBER MONORAIL
SERVICE WALKWAYS
ZONE (1008)
W605

Project Code	Rubric	Initiator	Lot	Ref	Number	Revision
9 3 M 0 4 7 6	A C C	6 0 D	E P	D W G	0 8 9 6	B

Tekla structures

approval is subject to approval of coordination package between multi-discipline

REVIEWED WITH COMMENT
MONORAILS PROJECT

All holes are 22mm U.N.O Length & Area & Weight per piece

Mark	Profile	Grade	QTY	Length	Area	Weight
W604	PL8*126.3	S355JR	8	183.4	0.04	1.0

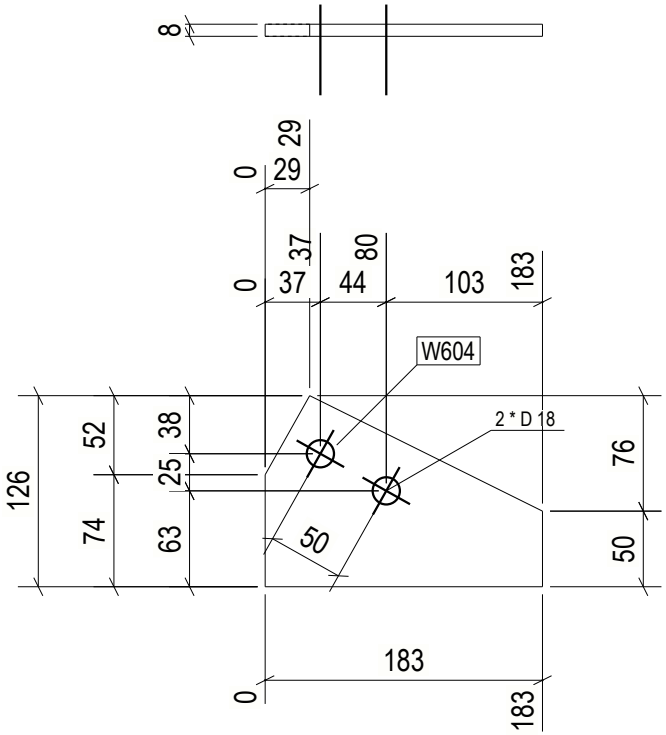

8 REQ'D AS DRAWN MK'D W604

6 October Monorail
Engineering Unit
Valid For Construction

GENERAL NOTES:

1. THE DIMENSIONS SHOWN ARE NOMINAL (IN MILLIMETERS), U.N.O.
2. WELD SIZESHALL BE AISC MINIMUM OF 6 mm UNLESS NOTED OTHERWISE.
3. ALL FIELD WELDS SHALL BE INSPECTED PER QUALITY ASSURANCE AND SPECIAL INSPECTIONS.

REFERENCE DRAWINGS

1	93M-BOA-NAT-LOT-04833
2	93M-BOA-NAT-LOT-09170
3	93M-BOA-NAT-LOT-01976
4	93M-BOA-NAT-LOT-20021
5	
6	
7	
8	
9	

6TH OF OCTOBER CITY RAIL TRANSIT MONORAIL

The Authority — Hill International Consultant — Main Contractor — Structural Designer

KEY PLAN:

REV.	DATE	DSG	CHK	APP	AMENDMENTS	STATUS
B	12/05/2023	M.KH	M.KH	DR.M.M	ISSUED FOR INFORMATION	IFI
A	11/20/2022	M.KH	M.KH	DR.M.M	ISSUED FOR INFORMATION	IFI

SCALE: AS SHOWN | SHOPDRAWING | DATE: 12/05/2023

DRAWING TITLE
6TH OF OCTOBER MONORAIL
SERVICE WALKWAYS
ZONE (1008)
W604

Project Code	Rubric	Initiator	Lot	Ref	Number	Revision
93M	047	6ACC	60DEP	DWG	0897	B

Tekla structures

approval is subject to approval of coordination package between multi-discipline

REVIEWED WITH COMMENT
MONORAILS PROJECT

All holes are 22mm U.N.O Length & Area & Weight per piece

Mark	Profile	Grade	QTY	Length	Area	Weight
W603	PL8*167.5	S355JR	1	300.3	0.08	2.2

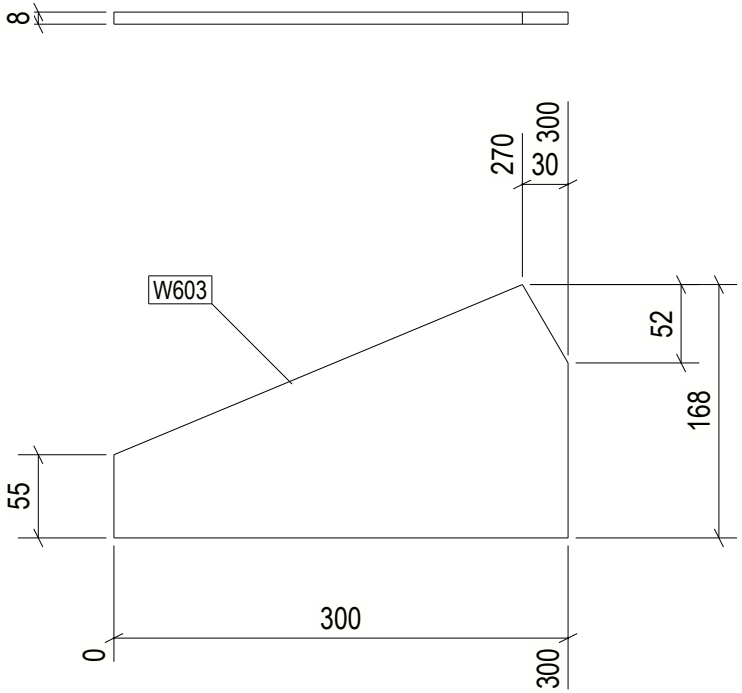

1 REQ'D AS DRAWN MK'D W603

6 October Monorail
Engineering Unit
Valid For Construction

GENERAL NOTES:

1. THE DIMENSIONS SHOWN ARE NOMINAL (IN MILLIMETERS), U.N.O.
2. WELD SIZESHALL BE AISC MINIMUM OF 6 mm UNLESS NOTED OTHERWISE.
3. ALL FIELD WELDS SHALL BE INSPECTED PER QUALITY ASSURANCE AND SPECIAL INSPECTIONS.

REFERENCE DRAWINGS

1	93M-BOA-NAT-LOT-04833
2	93M-BOA-NAT-LOT-09170
3	93M-BOA-NAT-LOT-01976
4	93M-BOA-NAT-LOT-20021
5	
6	
7	
8	
9	

6TH OF OCTOBER CITY RAIL TRANSIT MONORAIL

The Authority | Hill International Consultant | Main Contractor | Structural Designer

KEY PLAN:

REV.	DATE	DSG	CHK	APP	AMENDMENTS	STATUS
B	12/05/2023	M.KH	M.KH	DR.M.M	ISSUED FOR INFORMATION	IFI
A	11/20/2022	M.KH	M.KH	DR.M.M	ISSUED FOR INFORMATION	IFI

SCALE: AS SHOWN | SHOPDRAWING | DATE: 12/05/2023

DRAWING TITLE
6TH OF OCTOBER MONORAIL
SERVICE WALKWAYS
ZONE (1008)
W603

Project Code	Rubric	Initiator	Lot	Ref	Number	Revision
9 3 M	0 4 7 6	A C C	6 0 D	E P	D W G	0 8 8 9 8	B

Tekla structures

approval is subject to approval of coordination package between multi-discipline

REVIEWED WITH COMMENT
MONORAILS PROJECT

All holes are 22mm U.N.O Length & Area & Weight per piece

Mark	Profile	Grade	QTY	Length	Area	Weight
W602	PL8*125.8	S355-JR	4	169.4	0.03	1.0

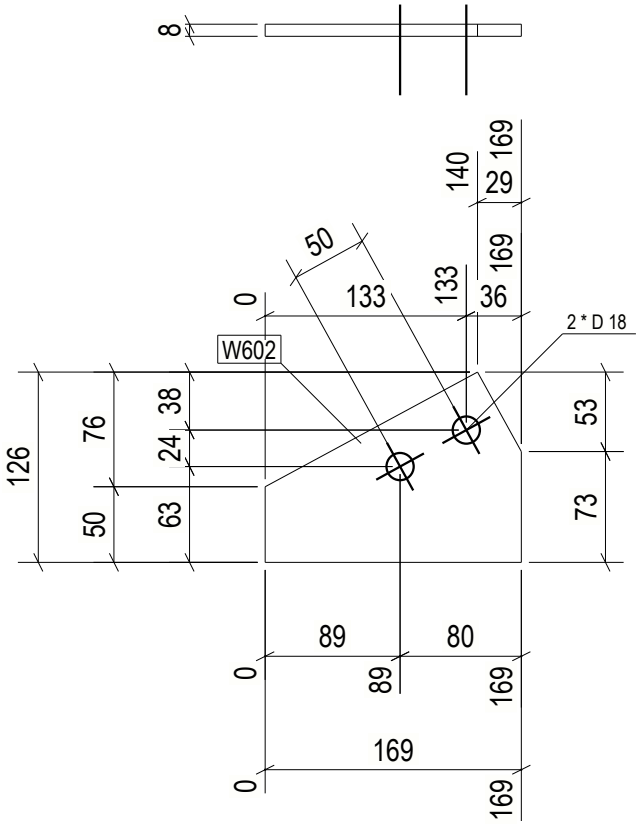

4 REQ'D AS DRAWN MK'D W602

6 October Monorail
Engineering Unit
Valid For Construction

GENERAL NOTES:

1. THE DIMENSIONS SHOWN ARE NOMINAL (IN MILLIMETERS), U.N.O.
2. WELD SIZESHALL BE AISC MINIMUM OF 6 mm UNLESS NOTED OTHERWISE.
3. ALL FIELD WELDS SHALL BE INSPECTED PER QUALITY ASSURANCE AND SPECIAL INSPECTIONS.

REFERENCE DRAWINGS

1	93M-BOA-NAT-LOT-04833
2	93M-BOA-NAT-LOT-09170
3	93M-BOA-NAT-LOT-01976
4	93M-BOA-NAT-LOT-20021
5	
6	
7	
8	
9	

6TH OF OCTOBER CITY RAIL TRANSIT MONORAIL

The Authority | Hill International Consultant | Main Contractor | Structural Designer

KEY PLAN:

SCALE: AS SHOWN | SHOPDRAWING | DATE: 12/09/2023

REV.	DATE	DSG	CHK	APP	AMENDMENTS	STATUS
B	12/05/2023	M.KH	M.KH	DR.BUM	ISSUED FOR INFORMATION	IFI
A	11/20/2022	M.KH	M.KH	DR.BUM	ISSUED FOR INFORMATION	IFI

DRAWING TITLE
6TH OF OCTOBER MONORAIL
SERVICE WALKWAYS
ZONE (1008)
W602

Project Code	Rubric	Initiator	Lot	Ref	Number	Revision
93M	047	ACC	60DEP	DWG	0889	B

Tekla structures

approval is subject to approval of coordination package between multi-discipline

REVIEWED WITH COMMENT
MONORAILS PROJECT

All holes are 22mm U.N.O Length & Area & Weight per piece

Mark	Profile	Grade	QTY	Length	Area	Weight
W601	L70*7	S235JR	1	984.9	0.28	7.2

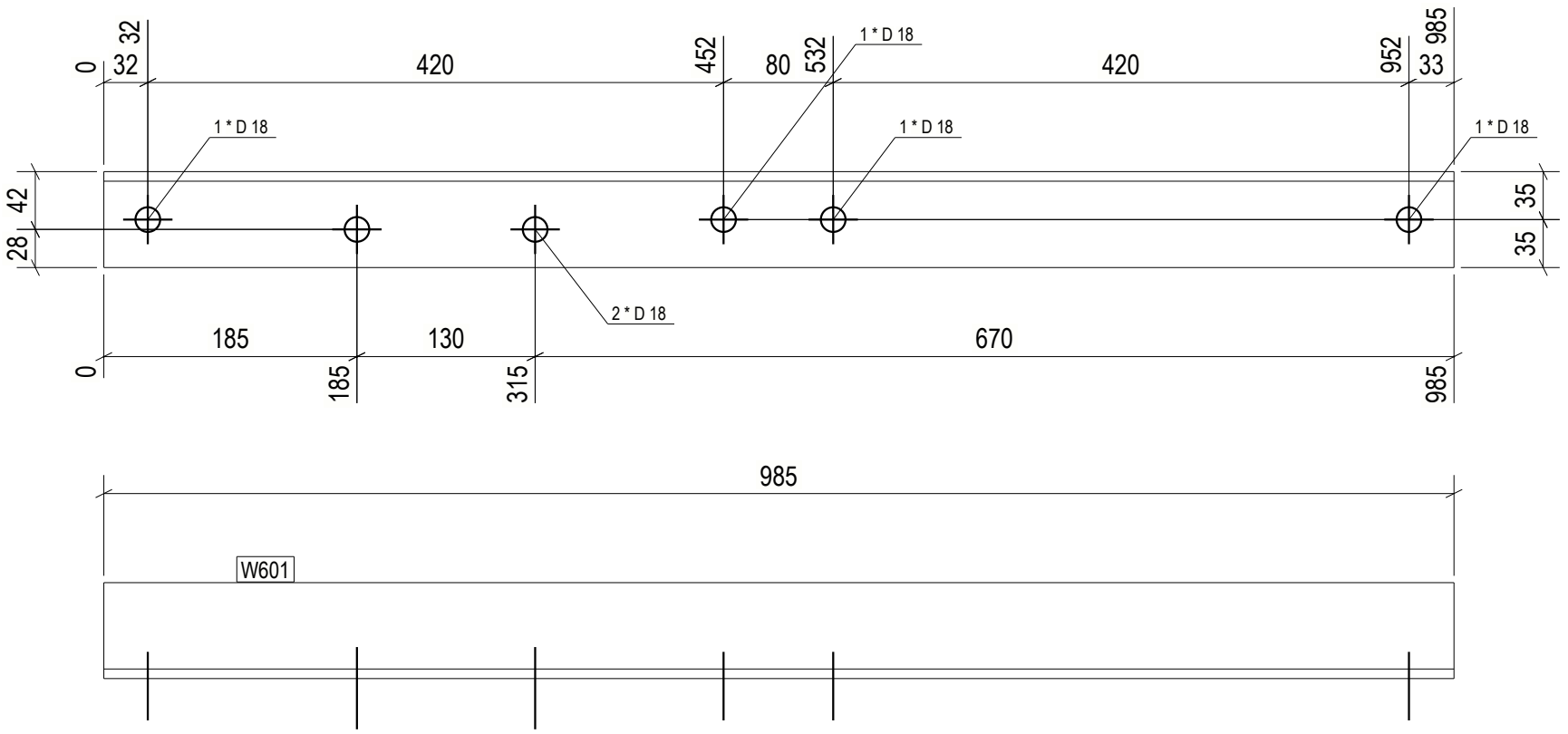

1 REQ'D AS DRAWN MK'D W601

6 October Monorail
Engineering Unit
Valid For Construction

GENERAL NOTES:

1. THE DIMENSIONS SHOWN ARE NOMINAL (IN MILLIMETERS), U.N.O.
2. WELD SIZESHALL BE AISC MINIMUM OF 6 mm UNLESS NOTED OTHERWISE.
3. ALL FIELD WELDS SHALL BE INSPECTED PER QUALITY ASSURANCE AND SPECIAL INSPECTIONS.

REFERENCE DRAWINGS

1	93M-BOA-NAT-LOT-04833
2	93M-BOA-NAT-LOT-09170
3	93M-BOA-NAT-LOT-01976
4	93M-BOA-NAT-LOT-20021
5	
6	
7	
8	
9	

6TH OF OCTOBER CITY RAIL TRANSIT MONORAIL

The Authority — Hill International Consultant — Main Contractor — Structural Designer

KEY PLAN:

SCALE: AS SHOWN | SHOPDRAWING | DATE: 12/09/2023

REV.	DATE	DSG	CHK	APP	AMENDMENTS	STATUS
B	12/05/2023	M.KH	M.KH	DR.M.M	ISSUED FOR INFORMATION	IFI
A	11/20/2022	M.KH	M.KH	DR.M.M	ISSUED FOR INFORMATION	IFI

DRAWING TITLE

6TH OF OCTOBER MONORAIL
SERVICE WALKWAYS
ZONE (1008)
W601

Project Code	Rubric	Initiator	Lot	Ref	Number	Revision
93M	047	ACC	60	EP	DWG	0890	B

Tekla structures

approval is subject to approval of coordination package between multi-discipline

REVIEWED WITH COMMENT MONORAILS PROJECT

All holes are 22mm U.N.O Length & Area & Weight per piece						
W600	L70*7	S235JR	1	1160.0	0.33	8.5
Mark	Profile	Grade	QTY	Length	Area	Weight

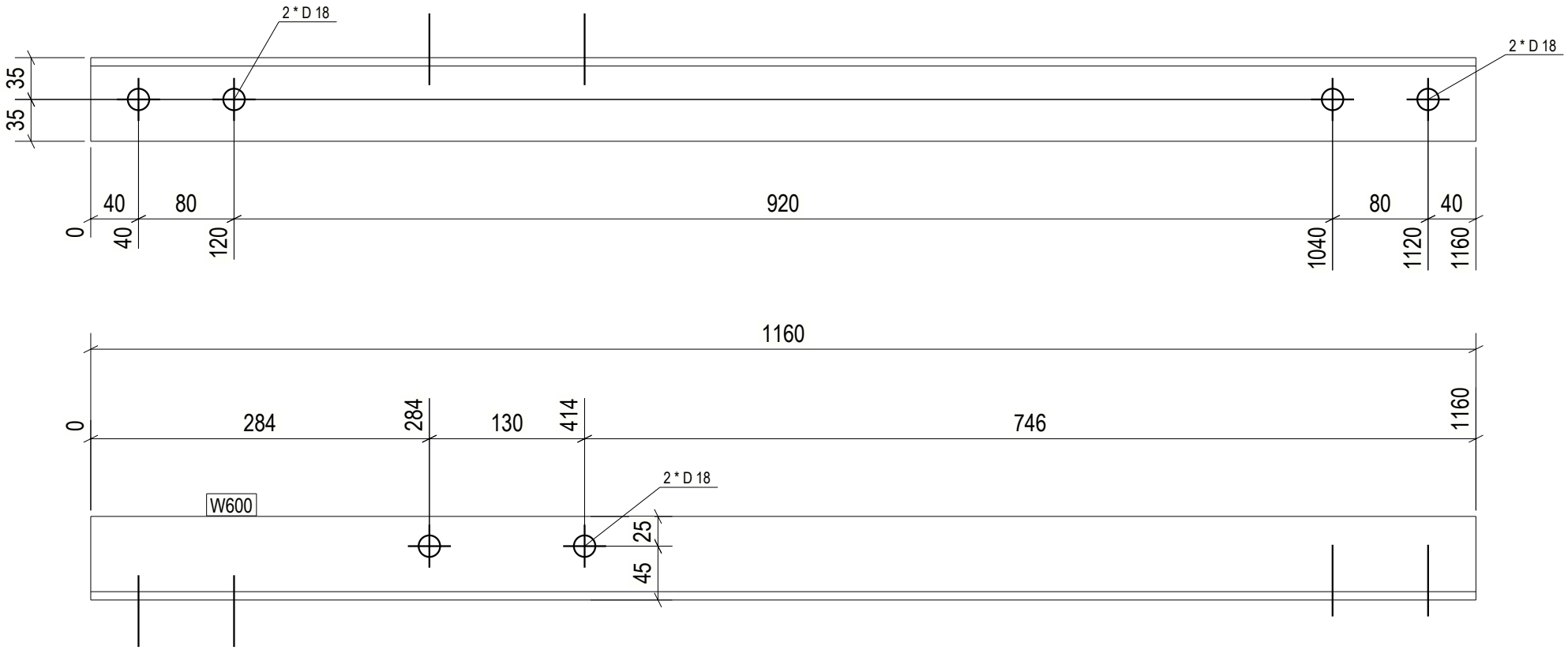

1 REQ'D AS DRAWN MK'D W600

6 October Monorail Engineering Unit
Valid For Construction

GENERAL NOTES:

1. THE DIMENSIONS SHOWN ARE NOMINAL (IN MILLIMETERS), U.N.O.
2. WELD SIZESHALL BE AISC MINIMUM OF 6 mm UNLESS NOTED OTHERWISE.
3. ALL FIELD WELDS SHALL BE INSPECTED PER QUALITY ASSURANCE AND SPECIAL INSPECTIONS.

REFERENCE DRAWINGS

1	93M-BOA-NAT-LOT-04833
2	93M-BOA-NAT-LOT-09170
3	93M-BOA-NAT-LOT-01976
4	93M-BOA-NAT-LOT-20021
5	
6	
7	
8	
9	

6TH OF OCTOBER CITY RAIL TRANSIT MONORAIL

The Authority — Hill International Consultant — Main Contractor — Structural Designer

KEY PLAN:

SCALE	SHOPDRAWING	DATE
AS SHOWN		12/05/2023

REV	DATE	DSG	CHK	APP	AMENDMENTS	STATUS
B	12/05/2023	M.KH	M.KH	DR.M.M	ISSUED FOR INFORMATION	IFI
A	11/20/2022	M.KH	M.KH	DR.M.M	ISSUED FOR INFORMATION	IFI

DRAWING TITLE

6TH OF OCTOBER MONORAIL SERVICE WALKWAYS ZONE (1008)
W600

Project Code	Rubric	Initiator	Lot	Ref	Number	Revision
93M	0476	ACC	60DEP	DWG	0890 1	B

Tekla structures

approval is subject to approval of coordination package between multi-discipline

REVIEWED WITH COMMENT
MONORAILS PROJECT

All holes are 22mm U.N.O Length & Area & Weight per piece

Mark	Profile	Grade	QTY	Length	Area	Weight
W599	CHS48.3*4.0	S235JR	1	19.9	0.00	0.1

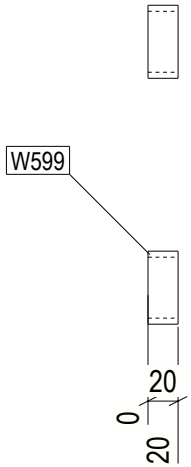

1 REQ'D AS DRAWN MK'D W599

6 October Monorail
Engineering Unit
Valid For Construction

GENERAL NOTES:

1. THE DIMENSIONS SHOWN ARE NOMINAL (IN MILLIMETERS), U.N.O.
2. WELD SIZESHALL BE AISC MINIMUM OF 6 mm UNLESS NOTED OTHERWISE.
3. ALL FIELD WELDS SHALL BE INSPECTED PER QUALITY ASSURANCE AND SPECIAL INSPECTIONS.

REFERENCE DRAWINGS

1	93M-BOA-NAT-LOT-04833
2	93M-BOA-NAT-LOT-09170
3	93M-BOA-NAT-LOT-01976
4	93M-BOA-NAT-LOT-20021
5	
6	
7	
8	
9	

6TH OF OCTOBER CITY RAIL TRANSIT MONORAIL

The Authority | Hill International Consultant | Main Contractor | Structural Designer

KEY PLAN:

REV.	DATE	DSG	CHK	APP	AMENDMENTS	STATUS
B	12/05/2023	M.KH	M.KH	DR.M.M	ISSUED FOR INFORMATION	IFI
A	11/20/2022	M.KH	M.KH	DR.M.M	ISSUED FOR INFORMATION	IFI

SCALE: AS SHOWN | SHOPDRAWING | DATE: 12/05/2023

DRAWING TITLE
6TH OF OCTOBER MONORAIL
SERVICE WALKWAYS
ZONE (1008)
W599

Project Code	Rubric	Initiator	Lot	Ref	Number	Revision
9 3 M	0 4 7 6	A C C	6 0	D E P	D W G	0 8 9 0 2	B

Tekla structures

approval is subject to approval of coordination package between multi-discipline

REVIEWED WITH COMMENT
MONORAILS PROJECT

All holes are 22mm U.N.O Length & Area & Weight per piece

Mark	Profile	Grade	QTY	Length	Area	Weight
W598	CHS48.3*4.0	S235JR	2	48.7	0.01	0.2

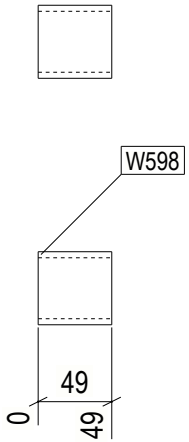

2 REQ'D AS DRAWN MK'D W598

6 October Monorail
Engineering Unit
Valid For Construction

GENERAL NOTES:

1. THE DIMENSIONS SHOWN ARE NOMINAL (IN MILLIMETERS), U.N.O.
2. WELD SIZESHALL BE AISC MINIMUM OF 6 mm UNLESS NOTED OTHERWISE.
3. ALL FIELD WELDS SHALL BE INSPECTED PER QUALITY ASSURANCE AND SPECIAL INSPECTIONS.

REFERENCE DRAWINGS

1	93M-BOA-NAT-LOT-04833
2	93M-BOA-NAT-LOT-09170
3	93M-BOA-NAT-LOT-01976
4	93M-BOA-NAT-LOT-20021
5	
6	
7	
8	
9	

6TH OF OCTOBER CITY RAIL TRANSIT MONORAIL

The Authority — Hill International Consultant — Main Contractor — Structural Designer

KEY PLAN:

REV.	DATE	DSG	CHK	APP	AMENDMENTS	STATUS
B	12/05/2023	M.KH	M.KH	DR.BIM	ISSUED FOR INFORMATION	IFI
A	11/20/2022	M.KH	M.KH	DR.BIM	ISSUED FOR INFORMATION	IFI

SCALE: AS SHOWN | SHOPDRAWING | DATE: 12/05/2023

DRAWING TITLE
6TH OF OCTOBER MONORAIL
SERVICE WALKWAYS
ZONE (1008)
W598

Project Code	Rubric	Initiator	Lot	Ref	Number	Revision
9 3 M 0 4 7 6	A C C	6 0 D E P	D W G	0 8 9 0 3		B

Tekla structures

approval is subject to approval of coordination package between multi-discipline

REVIEWED WITH COMMENT
MONORAILS PROJECT

All holes are 22mm U.N.O Length & Area & Weight per piece

Mark	Profile	Grade	QTY	Length	Area	Weight
W597	CHS48.3*4.0	S235JR	1	305.7	0.05	1.3

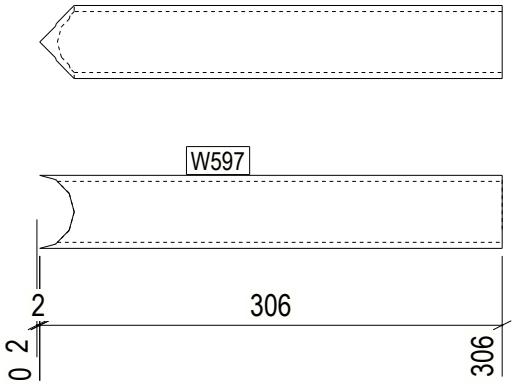

1 REQ'D AS DRAWN MK'D W597

6 October Monorail
Engineering Unit
Valid For Construction

GENERAL NOTES:

1. THE DIMENSIONS SHOWN ARE NOMINAL (IN MILLIMETERS), U.N.O.
2. WELD SIZESHALL BE AISC MINIMUM OF 6 mm UNLESS NOTED OTHERWISE.
3. ALL FIELD WELDS SHALL BE INSPECTED PER QUALITY ASSURANCE AND SPECIAL INSPECTIONS.

REFERENCE DRAWINGS

1	93M-BOA-NAT-LOT-04833
2	93M-BOA-NAT-LOT-09170
3	93M-BOA-NAT-LOT-01976
4	93M-BOA-NAT-LOT-20021
5	
6	
7	
8	
9	

6TH OF OCTOBER CITY RAIL TRANSIT MONORAIL

The Authority | Hill International Consultant | Main Contractor | Structural Designer

KEY PLAN:

REV.	DATE	DSG	CHK	APP	AMENDMENTS	STATUS
B	12/05/2023	M.KH	M.KH	DR.BIM	ISSUED FOR INFORMATION	IFI
A	11/20/2022	M.KH	M.KH	DR.BIM	ISSUED FOR INFORMATION	IFI

SCALE: AS SHOWN | SHOPDRAWING | DATE: 12/05/2023

DRAWING TITLE
6TH OF OCTOBER MONORAIL
SERVICE WALKWAYS
ZONE (1008)
W597

Project Code	Rubric	Initiator	Lot	Ref	Number	Revision
9 3 M	0 4 7 6	A C C	6 0 D	E P	D W G	0 8 9 0 4	B

Tekla structures

approval is subject to approval of coordination package between multi-discipline

REVIEWED WITH COMMENT
MONORAILS PROJECT

All holes are 22mm U.N.O Length & Area & Weight per piece

Mark	Profile	Grade	QTY	Length	Area	Weight
W596	CHS48.3*4.0	S235JR	1	286.3	0.04	1.3

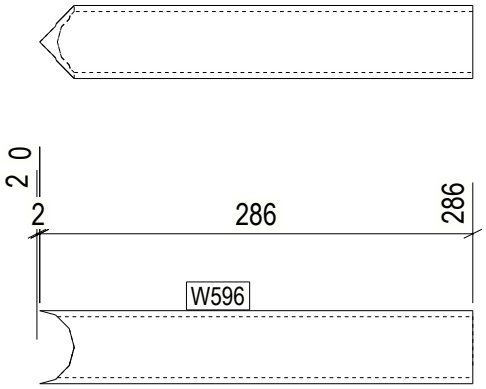

1 REQ'D AS DRAWN MK'D W596

6 October Monorail
Engineering Unit
Valid For Construction

GENERAL NOTES:

1. THE DIMENSIONS SHOWN ARE NOMINAL (IN MILLIMETERS), U.N.O.
2. WELD SIZESHALL BE AISC MINIMUM OF 6 mm UNLESS NOTED OTHERWISE.
3. ALL FIELD WELDS SHALL BE INSPECTED PER QUALITY ASSURANCE AND SPECIAL INSPECTIONS.

REFERENCE DRAWINGS

1	93M-BOA-NAT-LOT-04833
2	93M-BOA-NAT-LOT-09170
3	93M-BOA-NAT-LOT-01976
4	93M-BOA-NAT-LOT-20021
5	
6	
7	
8	
9	

6TH OF OCTOBER CITY RAIL TRANSIT MONORAIL

The Authority | Hill International Consultant | Main Contractor | Structural Designer

KEY PLAN:

REV.	DATE	DSG	CHK	APP	AMENDMENTS	STATUS
B	12/05/2023	M.KH	M.KH	DR.BM	ISSUED FOR INFORMATION	IFI
A	11/20/2022	M.KH	M.KH	DR.BM	ISSUED FOR INFORMATION	IFI

SCALE: AS SHOWN | SHOPDRAWING | DATE: 12/05/2023

DRAWING TITLE
6TH OF OCTOBER MONORAIL
SERVICE WALKWAYS
ZONE (1008)
W596

Project Code	Rubric	Initiator	Lot	Ref	Number	Revision
9 3 M	0 4 7 6	A C C	6 0 D	E P	D W G	0 8 9 0 5	B

Tekla structures

approval is subject to approval of coordination package between multi-discipline

REVIEWED WITH COMMENT
MONORAILS PROJECT

All holes are 22mm U.N.O Length & Area & Weight per piece

Mark	Profile	Grade	QTY	Length	Area	Weight
W595	CHS48.3*4.0	S235JR	1	261.7	0.04	1.1

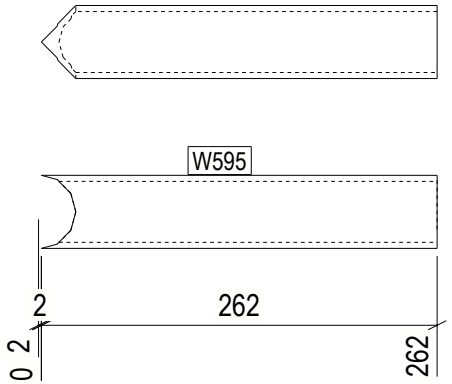

1 REQ'D AS DRAWN MK'D W595

6 October Monorail
Engineering Unit
Valid For Construction

GENERAL NOTES:

1. THE DIMENSIONS SHOWN ARE NOMINAL (IN MILLIMETERS), U.N.O.
2. WELD SIZESHALL BE AISC MINIMUM OF 6 mm UNLESS NOTED OTHERWISE.
3. ALL FIELD WELDS SHALL BE INSPECTED PER QUALITY ASSURANCE AND SPECIAL INSPECTIONS.

REFERENCE DRAWINGS

1	93M-BOA-NAT-LOT-04833
2	93M-BOA-NAT-LOT-09170
3	93M-BOA-NAT-LOT-01976
4	93M-BOA-NAT-LOT-20021
5	
6	
7	
8	
9	

6TH OF OCTOBER CITY RAIL TRANSIT MONORAIL

The Authority | Hill International Consultant | Main Contractor | Structural Designer

KEY PLAN:

REV.	DATE	DSG	CHK	APP	AMENDMENTS	STATUS
B	12/05/2023	M.KH	M.KH	DR.M.M	ISSUED FOR INFORMATION	IFI
A	11/20/2022	M.KH	M.KH	DR.M.M	ISSUED FOR INFORMATION	IFI

SCALE: AS SHOWN | SHOPDRAWING | DATE: 12/05/2023

DRAWING TITLE
6TH OF OCTOBER MONORAIL
SERVICE WALKWAYS
ZONE (1008)
W595

Project Code	Rubric	Initiator	Lot	Ref	Number	Revision
9 3 M	0 4 7 6	A C C	6 0 D	E P	D W G	0 8 9 0 6	B

Tekla structures

approval is subject to approval of coordination package between multi-discipline

REVIEWED WITH COMMENT
MONORAILS PROJECT

All holes are 22mm U.N.O Length & Area & Weight per piece

Mark	Profile	Grade	QTY	Length	Area	Weight
W594	CHS48.3*4.0	S235JR	1	1162.1	0.17	5.1

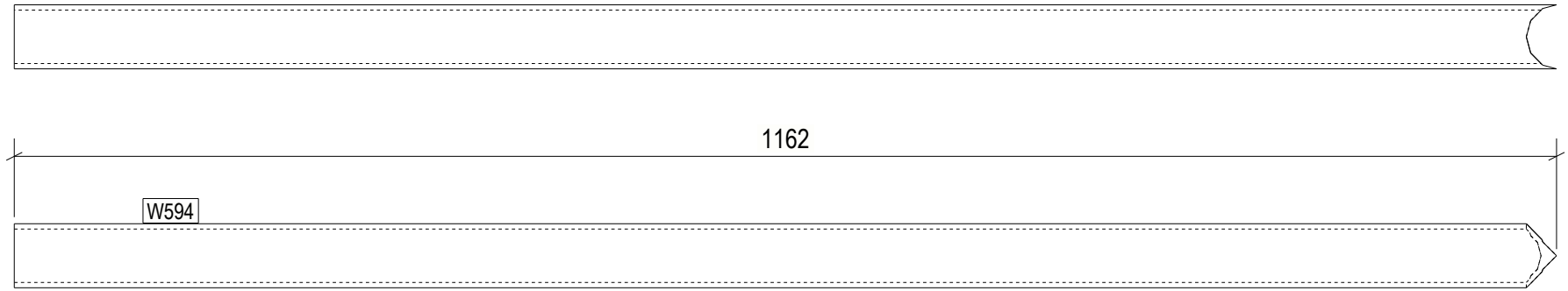

1 REQ'D AS DRAWN MK'D W594

6 October Monorail
Engineering Unit
Valid For Construction

GENERAL NOTES:

1. THE DIMENSIONS SHOWN ARE NOMINAL (IN MILLIMETERS), U.N.O.
2. WELD SIZESHALL BE AISC MINIMUM OF 6 mm UNLESS NOTED OTHERWISE.
3. ALL FIELD WELDS SHALL BE INSPECTED PER QUALITY ASSURANCE AND SPECIAL INSPECTIONS.

REFERENCE DRAWINGS

1	93M-BOA-NAT-LOT-04833
2	93M-BOA-NAT-LOT-09170
3	93M-BOA-NAT-LOT-01976
4	93M-BOA-NAT-LOT-20021
5	
6	
7	
8	
9	

6TH OF OCTOBER CITY RAIL TRANSIT MONORAIL

The Authority — Hill International Consultant — Main Contractor — Structural Designer

KEY PLAN:

REV.	DATE	DSG	CHK	APP	AMENDMENTS	STATUS
B	12/05/2023	M.KH	M.KH	DR.M.M	ISSUED FOR INFORMATION	IFI
A	11/20/2022	M.KH	M.KH	DR.M.M	ISSUED FOR INFORMATION	IFI

SCALE: AS SHOWN | SHOPDRAWING | DATE: 12/05/2023

DRAWING TITLE
6TH OF OCTOBER MONORAIL
SERVICE WALKWAYS
ZONE (1008)
W594

Project Code	Rubric	Initiator	Lot	Ref	Number	Revision
93M	476	ACC	60	DEP	DWG	08907	B

Tekla structures

approval is subject to approval of coordination package between multi-discipline

REVIEWED WITH COMMENT
MONORAILS PROJECT

All holes are 22mm U.N.O Length & Area & Weight per piece

Mark	Profile	Grade	QTY	Length	Area	Weight
W593	ROD12	S355JR	60	879.7	0.03	0.7

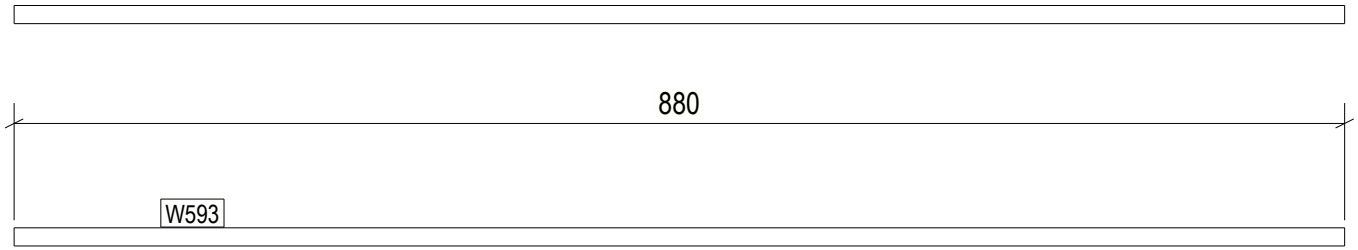

60 REQ'D AS DRAWN MK'D W593

6 October Monorail
Engineering Unit
Valid For Construction

GENERAL NOTES:

1. THE DIMENSIONS SHOWN ARE NOMINAL (IN MILLIMETERS), U.N.O.
2. WELD SIZESHALL BE AISC MINIMUM OF 6 mm UNLESS NOTED OTHERWISE.
3. ALL FIELD WELDS SHALL BE INSPECTED PER QUALITY ASSURANCE AND SPECIAL INSPECTIONS.

REFERENCE DRAWINGS

1	93M-BOA-NAT-LOT-04833
2	93M-BOA-NAT-LOT-09170
3	93M-BOA-NAT-LOT-01976
4	93M-BOA-NAT-LOT-20021
5	
6	
7	
8	
9	

6TH OF OCTOBER CITY RAIL TRANSIT MONORAIL

The Authority | Hill International Consultant | Main Contractor | Structural Designer

KEY PLAN:

REV.	DATE	DSG	CHK	APP	AMENDMENTS	STATUS
B	12/05/2023	M.KH	M.KH	DR.BM	ISSUED FOR INFORMATION	IFI
A	11/20/2022	M.KH	M.KH	DR.BM	ISSUED FOR INFORMATION	IFI

SCALE: AS SHOWN | SHOPDRAWING | DATE: 12/05/2023

DRAWING TITLE
6TH OF OCTOBER MONORAIL
SERVICE WALKWAYS
ZONE (1008)
W593

Project Code	Rubric	Initiator	Lot	Ref	Number	Revision
9 3 M	0 4 7 6	A C C	6 0 D	E P	D W G	0 8 9 0 8	B

Tekla structures

approval is subject to approval of coordination package between multi-discipline

REVIEWED WITH COMMENT
MONORAILS PROJECT

All holes are 22mm U.N.O Length & Area & Weight per piece

Mark	Profile	Grade	QTY	Length	Area	Weight
W592	CHS48.3*4.0	S235JR	8	996.3	0.15	4.4

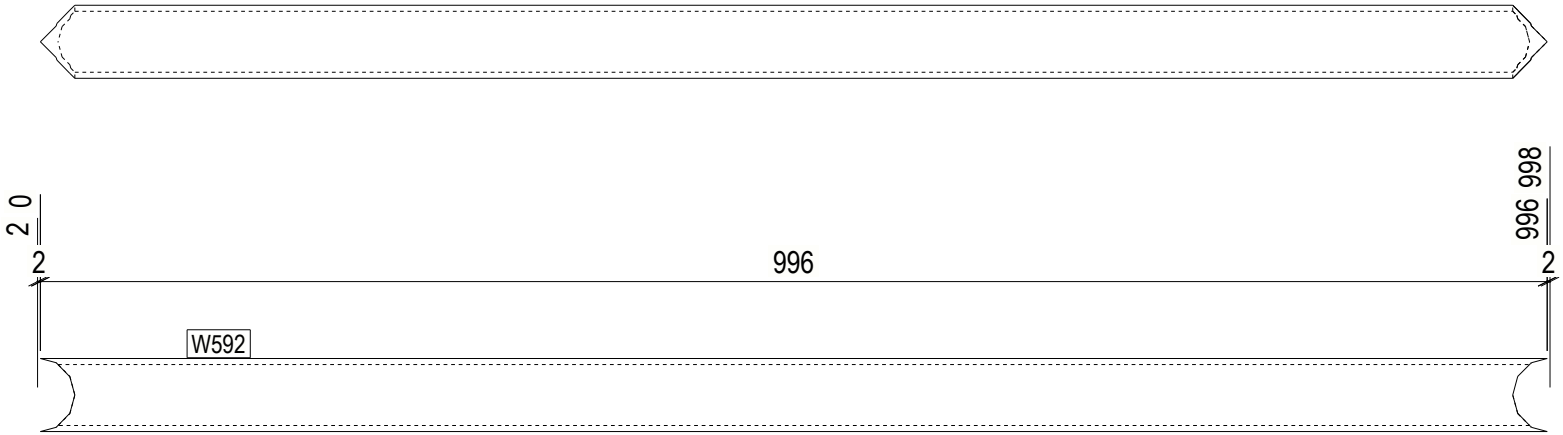

8 REQ'D AS DRAWN MK'D W592

6 October Monorail
Engineering Unit
Valid For Construction

GENERAL NOTES:

1. THE DIMENSIONS SHOWN ARE NOMINAL (IN MILLIMETERS), U.N.O.
2. WELD SIZESHALL BE AISC MINIMUM OF 6 mm UNLESS NOTED OTHERWISE.
3. ALL FIELD WELDS SHALL BE INSPECTED PER QUALITY ASSURANCE AND SPECIAL INSPECTIONS.

REFERENCE DRAWINGS

1	93M-BOA-NAT-LOT-04833
2	93M-BOA-NAT-LOT-09170
3	93M-BOA-NAT-LOT-01976
4	93M-BOA-NAT-LOT-20021
5	
6	
7	
8	
9	

6TH OF OCTOBER CITY RAIL TRANSIT MONORAIL

The Authority — Hill International Consultant — Main Contractor — Structural Designer

KEY PLAN:

SCALE: AS SHOWN | SHOPDRAWING | DATE: 12/09/2023

REV	DATE	DSG	CHK	APP	AMENDMENTS	STATUS
B	12/05/2023	M.KH	M.KH	DR.M.M	ISSUED FOR INFORMATION	IFI
A	11/20/2022	M.KH	M.KH	DR.M.M	ISSUED FOR INFORMATION	IFI

DRAWING TITLE

6TH OF OCTOBER MONORAIL
SERVICE WALKWAYS
ZONE (1008)
W592

Project Code	Rubric	Initiator	Lot	Ref	Number	Revision
9 3 M	0 4 7 6	A C C	6 0 D	E P	D W G	0 8 9 0 9	B

Tekla structures

approval is subject to approval of coordination package between multi-discipline

REVIEWED WITH COMMENT
MONORAILS PROJECT

All holes are 22mm U.N.O Length & Area & Weight per piece

Mark	Profile	Grade	QTY	Length	Area	Weight
W591	CHS48.3*4.0	S235JR	1	93.8	0.01	0.4

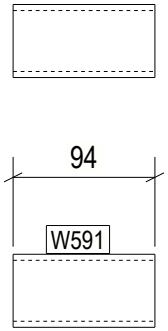

1 REQ'D AS DRAWN MK'D W591

6 October Monorail
Engineering Unit
Valid For Construction

GENERAL NOTES:

1. THE DIMENSIONS SHOWN ARE NOMINAL (IN MILLIMETERS), U.N.O.
2. WELD SIZESHALL BE AISC MINIMUM OF 6 mm UNLESS NOTED OTHERWISE.
3. ALL FIELD WELDS SHALL BE INSPECTED PER QUALITY ASSURANCE AND SPECIAL INSPECTIONS.

REFERENCE DRAWINGS

1	93M-BOA-NAT-LOT-04833
2	93M-BOA-NAT-LOT-09170
3	93M-BOA-NAT-LOT-01976
4	93M-BOA-NAT-LOT-20021
5	
6	
7	
8	
9	

6TH OF OCTOBER CITY RAIL TRANSIT MONORAIL

The Authority | Hill International Consultant | Main Contractor | Structural Designer

KEY PLAN:

REV.	DATE	DSG	CHK	APP	AMENDMENTS	STATUS
B	12/05/2023	M.KH	M.KH	DR.M.M	ISSUED FOR INFORMATION	IFI
A	11/20/2022	M.KH	M.KH	DR.M.M	ISSUED FOR INFORMATION	IFI

SCALE: AS SHOWN | SHOPDRAWING | DATE: 12/05/2023

DRAWING TITLE
6TH OF OCTOBER MONORAIL
SERVICE WALKWAYS
ZONE (1008)
W591

Project Code	Rubric	Initiator	Lot	Ref	Number	Revision
93M047	6ACC60	DEP	DWG	0891	0	B

Tekla structures

approval is subject to approval of coordination package between multi-discipline

REVIEWED WITH COMMENT
MONORAILS PROJECT

All holes are 22mm U.N.O Length & Area & Weight per piece

Mark	Profile	Grade	QTY	Length	Area	Weight
W590	CHS48.3*4.0	S235JR	1	89.5	0.01	0.4

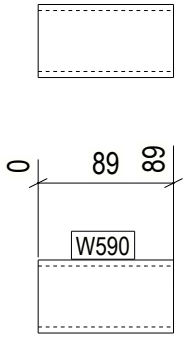

1 REQ'D AS DRAWN MK'D W590

6 October Monorail
Engineering Unit
Valid For Construction

GENERAL NOTES:

1. THE DIMENSIONS SHOWN ARE NOMINAL (IN MILLIMETERS), U.N.O.
2. WELD SIZESHALL BE AISC MINIMUM OF 6 mm UNLESS NOTED OTHERWISE.
3. ALL FIELD WELDS SHALL BE INSPECTED PER QUALITY ASSURANCE AND SPECIAL INSPECTIONS.

REFERENCE DRAWINGS

1	93M-BOA-NAT-LOT-04833
2	93M-BOA-NAT-LOT-09170
3	93M-BOA-NAT-LOT-01976
4	93M-BOA-NAT-LOT-20021
5	
6	
7	
8	
9	

6TH OF OCTOBER CITY RAIL TRANSIT MONORAIL

The Authority | Hill International Consultant | Main Contractor | Structural Designer

KEY PLAN:

REV.	DATE	DSG	CHK	APP	AMENDMENTS	STATUS
B	12/05/2023	M.KH	M.KH	DR.BIM	ISSUED FOR INFORMATION	IFI
A	11/20/2022	M.KH	M.KH	DR.BIM	ISSUED FOR INFORMATION	IFI

SCALE: AS SHOWN | SHOPDRAWING | DATE: 12/05/2023

DRAWING TITLE
6TH OF OCTOBER MONORAIL
SERVICE WALKWAYS
ZONE (1008)
W590

Project Code	Rubric	Initiator	Lot	Ref	Number	Revision
9 3 M	0 4 7 6	A C C	6 0 D	E P	D W G	0 8 9 1 1	B

Tekla structures

approval is subject to approval of coordination package between multi-discipline

REVIEWED WITH COMMENT
MONORAILS PROJECT

All holes are 22mm U.N.O Length & Area & Weight per piece

Mark	Profile	Grade	QTY	Length	Area	Weight
W589	PL10*25	S355JR	1	77.1	0.01	0.1

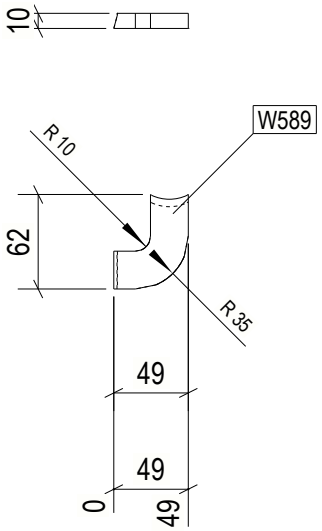

1 REQ'D AS DRAWN MK'D W589

6 October Monorail
Engineering Unit
Valid For Construction

GENERAL NOTES:

1. THE DIMENSIONS SHOWN ARE NOMINAL (IN MILLIMETERS), U.N.O.
2. WELD SIZESHALL BE AISC MINIMUM OF 6 mm UNLESS NOTED OTHERWISE.
3. ALL FIELD WELDS SHALL BE INSPECTED PER QUALITY ASSURANCE AND SPECIAL INSPECTIONS.

REFERENCE DRAWINGS

1	93M-BOA-NAT-LOT-04833
2	93M-BOA-NAT-LOT-09170
3	93M-BOA-NAT-LOT-01976
4	93M-BOA-NAT-LOT-20021
5	
6	
7	
8	
9	

6TH OF OCTOBER CITY RAIL TRANSIT MONORAIL

The Authority | Hill International Consultant | Main Contractor | Structural Designer

KEY PLAN:

REV.	DATE	DSG	CHK	APP	AMENDMENTS	STATUS
B	12/05/2023	M.KH	M.KH	DR.M.M	ISSUED FOR INFORMATION	IFI
A	11/20/2022	M.KH	M.KH	DR.M.M	ISSUED FOR INFORMATION	IFI

SCALE: AS SHOWN | SHOPDRAWING | DATE: 12/05/2023

DRAWING TITLE
6TH OF OCTOBER MONORAIL
SERVICE WALKWAYS
ZONE (1008)
W589

Project Code	Rubric	Initiator	Lot	Ref	Number	Revision
9 3 M	0 4 7 6	A C C	6 0 D	E P	D W G	0 8 9 1 2	B

Tekla structures

approval is subject to approval of coordination package between multi-discipline

REVIEWED WITH COMMENT
MONORAILS PROJECT

All holes are 22mm U.N.O Length & Area & Weight per piece

Mark	Profile	Grade	QTY	Length	Area	Weight
W588	L70*7	S235JR	2	60.0	0.02	0.4

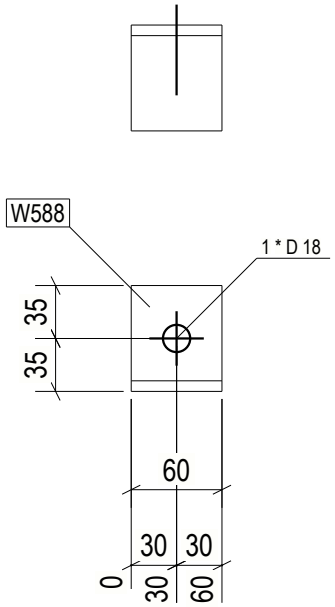

2 REQ'D AS DRAWN MK'D W588

6 October Monorail
Engineering Unit
Valid For Construction

GENERAL NOTES:

1. THE DIMENSIONS SHOWN ARE NOMINAL (IN MILLIMETERS), U.N.O.
2. WELD SIZESHALL BE AISC MINIMUM OF 6 mm UNLESS NOTED OTHERWISE.
3. ALL FIELD WELDS SHALL BE INSPECTED PER QUALITY ASSURANCE AND SPECIAL INSPECTIONS.

REFERENCE DRAWINGS

1	93M-BOA-NAT-LOT-04833
2	93M-BOA-NAT-LOT-09170
3	93M-BOA-NAT-LOT-01976
4	93M-BOA-NAT-LOT-20021
5	
6	
7	
8	
9	

6TH OF OCTOBER CITY RAIL TRANSIT MONORAIL

The Authority | Hill International Consultant | Main Contractor | Structural Designer

KEY PLAN:

REV.	DATE	DSG	CHK	APP	AMENDMENTS	STATUS
B	12/05/2023	M.KH	M.KH	DR.M.M	ISSUED FOR INFORMATION	IFI
A	11/20/2022	M.KH	M.KH	DR.M.M	ISSUED FOR INFORMATION	IFI

SCALE: AS SHOWN | SHOPDRAWING | DATE: 12/05/2023

DRAWING TITLE
6TH OF OCTOBER MONORAIL
SERVICE WALKWAYS
ZONE (1008)
W588

Project Code	Rubric	Initiator	Lot	Ref	Number	Revision
9 3 M	0 4 7 6	A C C	6 0 D	E P	D W G	0 8 9 1 3	B

Tekla structures

approval is subject to approval of coordination package between multi-discipline

REVIEWED WITH COMMENT
MONORAILS PROJECT

All holes are 22mm U.N.O Length & Area & Weight per piece

Mark	Profile	Grade	QTY	Length	Area	Weight
W587	CHS48.3*4.0	S235JR	1	137.2	0.02	0.6

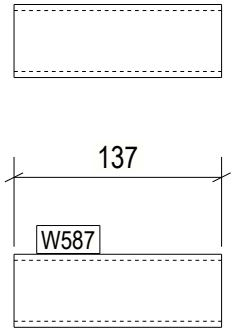

1 REQ'D AS DRAWN MK'D W587

6 October Monorail
Engineering Unit
Valid For Construction

GENERAL NOTES:

1. THE DIMENSIONS SHOWN ARE NOMINAL (IN MILLIMETERS), U.N.O.
2. WELD SIZESHALL BE AISC MINIMUM OF 6 mm UNLESS NOTED OTHERWISE.
3. ALL FIELD WELDS SHALL BE INSPECTED PER QUALITY ASSURANCE AND SPECIAL INSPECTIONS.

REFERENCE DRAWINGS

1	93M-BOA-NAT-LOT-04833
2	93M-BOA-NAT-LOT-09170
3	93M-BOA-NAT-LOT-01976
4	93M-BOA-NAT-LOT-20021
5	
6	
7	
8	
9	

6TH OF OCTOBER CITY RAIL TRANSIT MONORAIL

The Authority | Hill International Consultant | Main Contractor | Structural Designer

KEY PLAN:

REV.	DATE	DSG	CHK	APP	AMENDMENTS	STATUS
B	12/05/2023	M.KH	M.KH	DR.M.M	ISSUED FOR INFORMATION	IFI
A	11/20/2022	M.KH	M.KH	DR.M.M	ISSUED FOR INFORMATION	IFI

SCALE: AS SHOWN | SHOPDRAWING | DATE: 12/05/2023

DRAWING TITLE
6TH OF OCTOBER MONORAIL
SERVICE WALKWAYS
ZONE (1008)
W587

Project Code	Rubric	Initiator	Lot	Ref	Number	Revision
9 3 M	0 4 7 6	A C C	6 0	D E P	D W G	0 8 9 1 4	B

Tekla structures

approval is subject to approval of coordination package between multi-discipline

REVIEWED WITH COMMENT
MONORAILS PROJECT

All holes are 22mm U.N.O Length & Area & Weight per piece						
W586	ROD12	S355JR	1	904.3	0.03	0.7
Mark	Profile	Grade	QTY	Length	Area	Weight

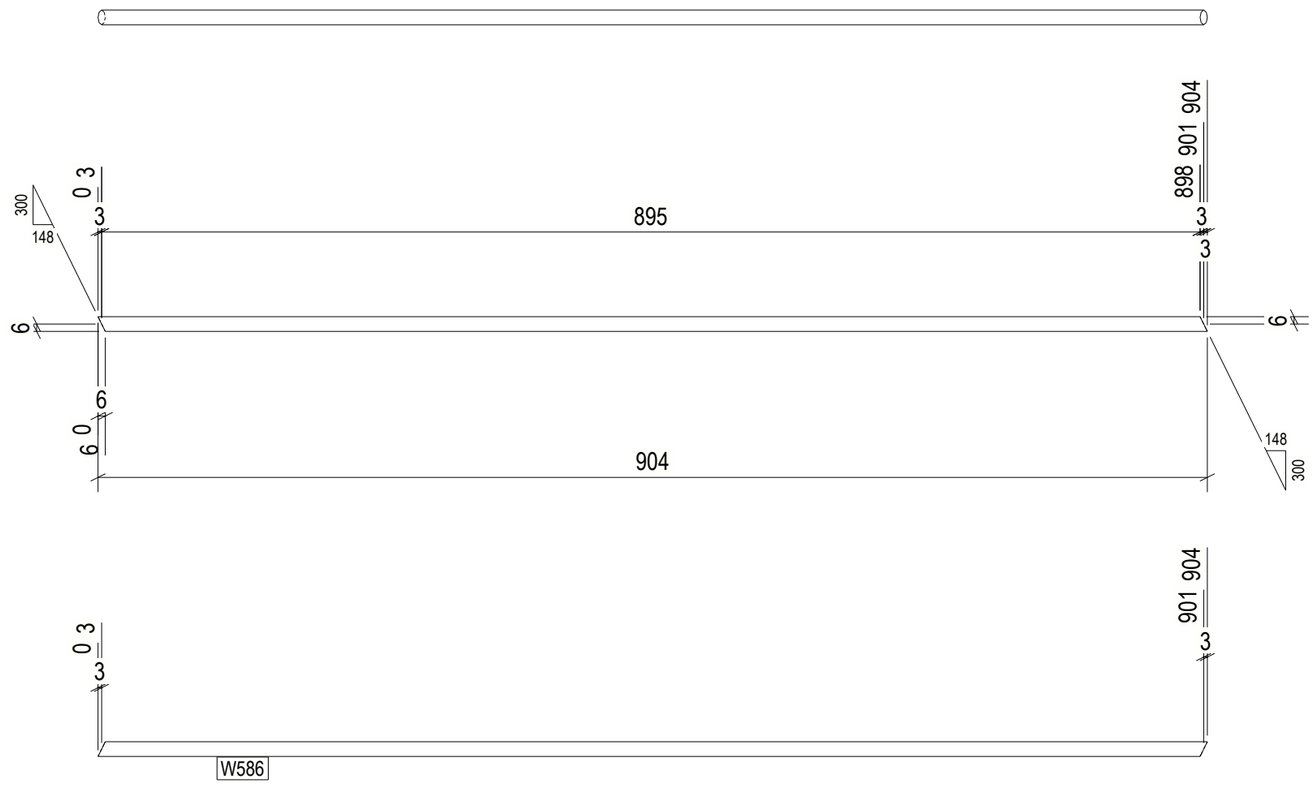

1 REQ'D AS DRAWN MK'D W586

GENERAL NOTES:

1. THE DIMENSIONS SHOWN ARE NOMINAL (IN MILLIMETERS), U.N.O.
2. WELD SIZESHALL BE AISC MINIMUM OF 6 mm UNLESS NOTED OTHERWISE.
3. ALL FIELD WELDS SHALL BE INSPECTED PER QUALITY ASSURANCE AND SPECIAL INSPECTIONS.

REFERENCE DRAWINGS

1	93M-BOA-NAT-LOT-04833
2	93M-BOA-NAT-LOT-09170
3	93M-BOA-NAT-LOT-01976
4	93M-BOA-NAT-LOT-20021
5	
6	
7	
8	
9	

6TH OF OCTOBER CITY RAIL TRANSIT MONORAIL

The Authority | Consultant: Hill International | Main Contractor: ORASCOM CONSTRUCTION / BOMBARDIER / Six Sigma Concessions | Structural Designer: INNOVA TRANSPORTATION

KEY PLAN:

6 October Monorail Engineering Unit
Valid For Construction

SCALE	SHOP DRAWING	DATE
AS SHOWN		12/05/2023

REV	DATE	DSN	CHK	APP	AMENDMENTS	STATUS
B	12/05/2023	M.KH	M.KH	DR.M.M	ISSUED FOR INFORMATION	IFI

DRAWING TITLE
6TH OF OCTOBER MONORAIL SERVICE WALKWAYS ZONE (1008)
W586

Project Code	Rubric	Initiator	Lot	Ref	Number	Revision
9 3	M 0 4 7 6	A C C	6 0 D E P	D W G	0 8 9 1 5	B

Tekla structures

approval is subject to approval of coordination package between multi-discipline

REVIEWED WITH COMMENT
MONORAILS PROJECT

All holes are 22mm U.N.O Length & Area & Weight per piece

Mark	Profile	Grade	QTY	Length	Area	Weight
W585	ROD12	S355JR	3	775.5	0.03	0.6

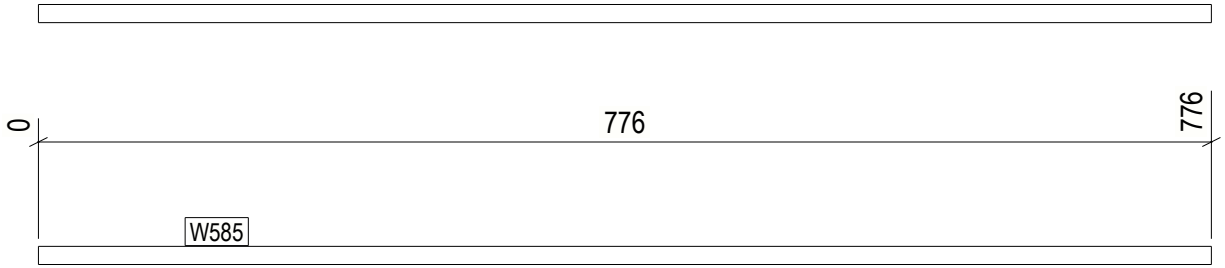

3 REQ'D AS DRAWN MK'D W585

6 October Monorail
Engineering Unit
Valid For Construction

GENERAL NOTES:

1. THE DIMENSIONS SHOWN ARE NOMINAL (IN MILLIMETERS), U.N.O.
2. WELD SIZESHALL BE AISC MINIMUM OF 6 mm UNLESS NOTED OTHERWISE.
3. ALL FIELD WELDS SHALL BE INSPECTED PER QUALITY ASSURANCE AND SPECIAL INSPECTIONS.

REFERENCE DRAWINGS

1	93M-BOA-NAT-LOT-04833
2	93M-BOA-NAT-LOT-09170
3	93M-BOA-NAT-LOT-01976
4	93M-BOA-NAT-LOT-20021
5	
6	
7	
8	
9	

6TH OF OCTOBER CITY RAIL TRANSIT MONORAIL

The Authority — Hill International Consultant — Main Contractor — Structural Designer

KEY PLAN:

REV.	DATE	DSG	CHK	APP	AMENDMENTS	STATUS
B	12/05/2023	M.KH	M.KH	DR.M.M	ISSUED FOR INFORMATION	IFI
A	11/20/2022	M.KH	M.KH	DR.M.M	ISSUED FOR INFORMATION	IFI

SCALE: AS SHOWN | SHOPDRAWING | DATE: 12/05/2023

DRAWING TITLE
6TH OF OCTOBER MONORAIL
SERVICE WALKWAYS
ZONE (1008)
W585

Project Code	Rubric	Initiator	Lot	Ref	Number	Revision
9 3 M	0 4 7 6	A C C	6 0 D	E P	D W G	0 8 9 1 6	B

Tekla structures

approval is subject to approval of coordination package between multi-discipline

REVIEWED WITH COMMENT
MONORAILS PROJECT

All holes are 22mm U.N.O Length & Area & Weight per piece

Mark	Profile	Grade	QTY	Length	Area	Weight
W584	PL10*255	S355JR	1	307.8	0.13	4.8

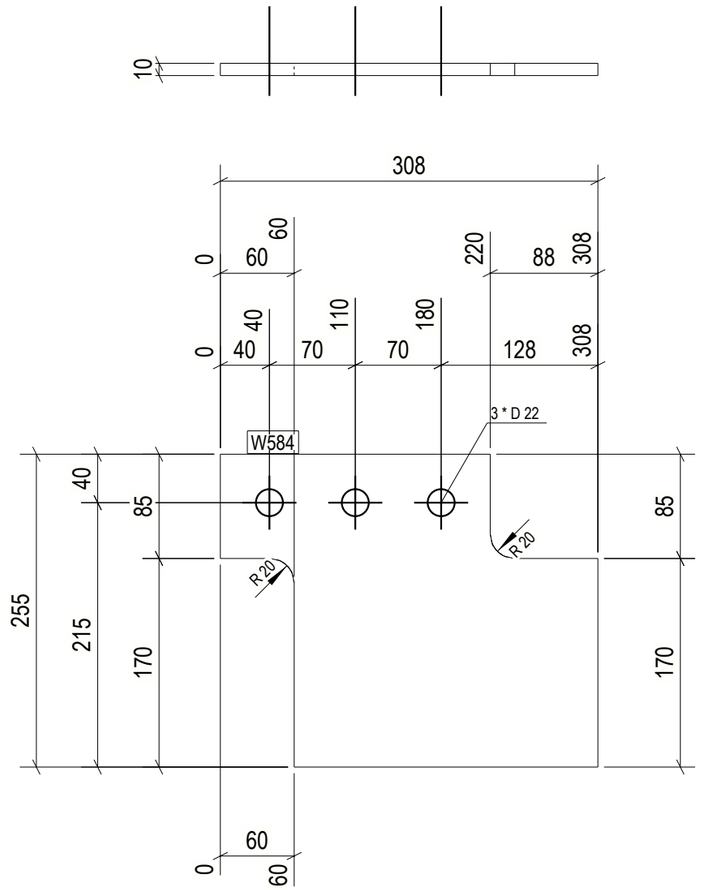

1 REQ'D AS DRAWN MK'D W584

GENERAL NOTES:

1. THE DIMENSIONS SHOWN ARE NOMINAL (IN MILLIMETERS), U.N.O.
2. WELD SIZESHALL BE AISC MINIMUM OF 6 mm UNLESS NOTED OTHERWISE.
3. ALL FIELD WELDS SHALL BE INSPECTED PER QUALITY ASSURANCE AND SPECIAL INSPECTIONS.

REFERENCE DRAWINGS

1	93M-BOA-NAT-LOT-04833
2	93M-BOA-NAT-LOT-09170
3	93M-BOA-NAT-LOT-01976
4	93M-BOA-NAT-LOT-20021
5	
6	
7	
8	
9	

6TH OF OCTOBER CITY RAIL TRANSIT MONORAIL

The Authority — Hill International (Consultant) — Main Contractor — Structural Designer

KEY PLAN:

6 October Monorail Engineering Unit Valid For Construction

SCALE: AS SHOWN | SHOP DRAWING | DATE: 12/05/2023

REV	DATE	DSN	CHK	APP	AMENDMENT DESCRIPTION	STATUS
B	12/05/2023	M.KH	M.KH	DR.M.M	ISSUED FOR INFORMATION	IFI
A	17/4/2022	D.SH	CHK	APP	AMENDMENT DESCRIPTION	STATUS

DRAWING TITLE

6TH OF OCTOBER MONORAIL
SERVICE WALKWAYS
ZONE (1008)
W584

Project Code	Rubric	Initiator	Lot	Ref	Number	Revision
93	M047	6ACC	60DE	PDWG	0891	7 B

Tekla structures

approval is subject to approval of coordination package between multi-discipline

REVIEWED WITH COMMENT
MONORAILS PROJECT

All holes are 22mm U.N.O Length & Area & Weight per piece

Mark	Profile	Grade	QTY	Length	Area	Weight
W583	CHS48.3*4.0	S235JR	1	240.0	0.04	1.0

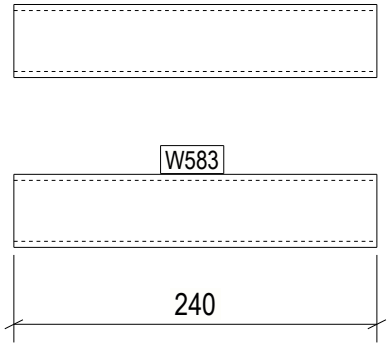

1 REQ'D AS DRAWN MK'D W583

6 October Monorail
Engineering Unit
Valid For Construction

GENERAL NOTES:

1. THE DIMENSIONS SHOWN ARE NOMINAL (IN MILLIMETERS), U.N.O.
2. WELD SIZESHALL BE AISC MINIMUM OF 6 mm UNLESS NOTED OTHERWISE.
3. ALL FIELD WELDS SHALL BE INSPECTED PER QUALITY ASSURANCE AND SPECIAL INSPECTIONS.

REFERENCE DRAWINGS

1	93M-BOA-NAT-LOT-04833
2	93M-BOA-NAT-LOT-09170
3	93M-BOA-NAT-LOT-01976
4	93M-BOA-NAT-LOT-20021
5	
6	
7	
8	
9	

6TH OF OCTOBER CITY RAIL TRANSIT MONORAIL

The Authority — Hill International Consultant — Main Contractor — Structural Designer

KEY PLAN:

REV.	DATE	DSG	CHK	APP	AMENDMENTS	STATUS
B	12/05/2023	M.KH	M.KH	DR.BIM	ISSUED FOR INFORMATION	IFI
A	11/20/2022	M.KH	M.KH	DR.BIM	ISSUED FOR INFORMATION	IFI

SCALE: AS SHOWN | SHOPDRAWING | DATE: 12/05/2023

DRAWING TITLE
6TH OF OCTOBER MONORAIL
SERVICE WALKWAYS
ZONE (1008)
W583

Project Code	Rubric	Initiator	Lot	Ref	Number	Revision
9 3 M	0 4 7 6	A C C	6 0 D E	P D W	G 0 8 9 1 8	B

Tekla structures

approval is subject to approval of coordination package between multi-discipline

REVIEWED WITH COMMENT
MONORAILS PROJECT

All holes are 22mm U.N.O Length & Area & Weight per piece

Mark	Profile	Grade	QTY	Length	Area	Weight
W582	CHS48.3*4.0	S235JR	1	98.2	0.01	0.4

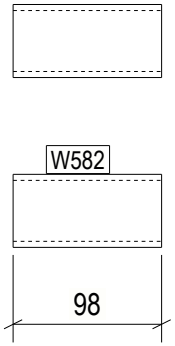

1 REQ'D AS DRAWN MK'D W582

6 October Monorail
Engineering Unit
Valid For Construction

GENERAL NOTES:

1. THE DIMENSIONS SHOWN ARE NOMINAL (IN MILLIMETERS), U.N.O.
2. WELD SIZESHALL BE AISC MINIMUM OF 6 mm UNLESS NOTED OTHERWISE.
3. ALL FIELD WELDS SHALL BE INSPECTED PER QUALITY ASSURANCE AND SPECIAL INSPECTIONS.

REFERENCE DRAWINGS

1	93M-BOA-NAT-LOT-04833
2	93M-BOA-NAT-LOT-09170
3	93M-BOA-NAT-LOT-01976
4	93M-BOA-NAT-LOT-20021
5	
6	
7	
8	
9	

6TH OF OCTOBER CITY RAIL TRANSIT MONORAIL

The Authority | Hill International Consultant | Main Contractor | Structural Designer

KEY PLAN:

REV.	DATE	DSG	CHK	APP	AMENDMENTS	STATUS
B	12/05/2023	M.KH	M.KH	DR.M.M	ISSUED FOR INFORMATION	IFI
A	11/20/2022	M.KH	M.KH	DR.M.M	ISSUED FOR INFORMATION	IFI

SCALE AS SHOWN | SHOPDRAWING | DATE 12/05/2023

DRAWING TITLE
6TH OF OCTOBER MONORAIL
SERVICE WALKWAYS
ZONE (1008)
W582

Project Code	Rubric	Initiator	Lot	Ref	Number	Revision
9 3 M	0 4 7 6	A C C	6 0	D E P	D W G	0 8 9 1 9	B

Tekla structures

approval is subject to approval of coordination package between multi-discipline

REVIEWED WITH COMMENT
MONORAILS PROJECT

All holes are 22mm U.N.O Length & Area & Weight per piece

Mark	Profile	Grade	QTY	Length	Area	Weight
W581	PL10*25	S355JR	1	71.7	0.01	0.1

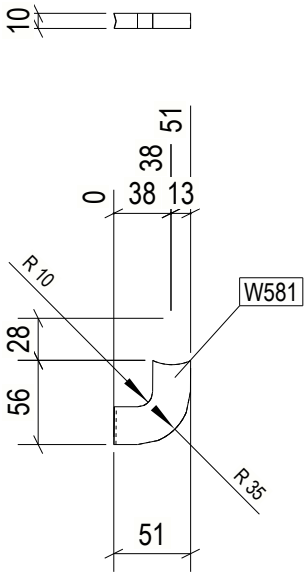

1 REQ'D AS DRAWN MK'D W581

6 October Monorail
Engineering Unit
Valid For Construction

GENERAL NOTES:

1. THE DIMENSIONS SHOWN ARE NOMINAL (IN MILLIMETERS), U.N.O.
2. WELD SIZESHALL BE AISC MINIMUM OF 6 mm UNLESS NOTED OTHERWISE.
3. ALL FIELD WELDS SHALL BE INSPECTED PER QUALITY ASSURANCE AND SPECIAL INSPECTIONS.

REFERENCE DRAWINGS

1	93M-BOA-NAT-LOT-04833
2	93M-BOA-NAT-LOT-09170
3	93M-BOA-NAT-LOT-01976
4	93M-BOA-NAT-LOT-20021
5	
6	
7	
8	
9	

6TH OF OCTOBER CITY RAIL TRANSIT MONORAIL

The Authority | Hill International Consultant | Main Contractor | Structural Designer

KEY PLAN:

SCALE: AS SHOWN | SHOPDRAWING | DATE: 12/09/2023

REV.	DATE	DSG	CHK	APP	AMENDMENTS	STATUS
B	12/05/2023	M.KH	M.KH	DR.M.M	ISSUED FOR INFORMATION	IFI
A	11/20/2022	M.KH	M.KH	DR.M.M	ISSUED FOR INFORMATION	IFI

DRAWING TITLE
6TH OF OCTOBER MONORAIL
SERVICE WALKWAYS
ZONE (1008)
W581

Project Code	Rubric	Initiator	Lot	Ref	Number	Revision
93M	047	6ACC	60DEP	DWG	0892	B

Tekla structures

approval is subject to approval of coordination package between multi-discipline

REVIEWED WITH COMMENT
MONORAILS PROJECT

All holes are 22mm U.N.O Length & Area & Weight per piece

Mark	Profile	Grade	QTY	Length	Area	Weight
W580	CHS48.3*4.0	S235JR	1	884.9	0.13	3.9

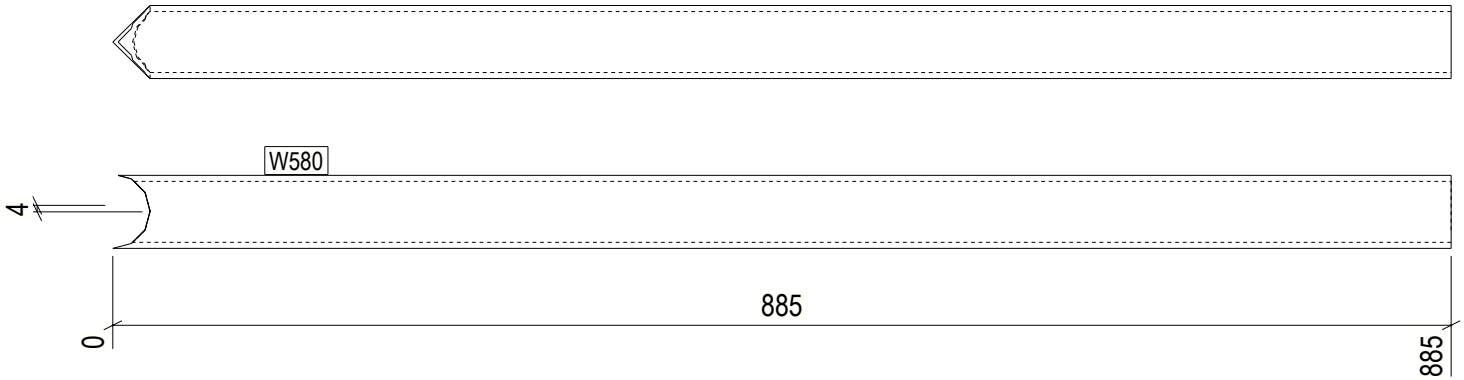

1 REQ'D AS DRAWN MK'D W580

6 October Monorail
Engineering Unit
Valid For Construction

GENERAL NOTES:

1. THE DIMENSIONS SHOWN ARE NOMINAL (IN MILLIMETERS), U.N.O.
2. WELD SIZESHALL BE AISC MINIMUM OF 6 mm UNLESS NOTED OTHERWISE.
3. ALL FIELD WELDS SHALL BE INSPECTED PER QUALITY ASSURANCE AND SPECIAL INSPECTIONS.

REFERENCE DRAWINGS

1	93M-BOA-NAT-LOT-04833
2	93M-BOA-NAT-LOT-09170
3	93M-BOA-NAT-LOT-01976
4	93M-BOA-NAT-LOT-20021
5	
6	
7	
8	
9	

6TH OF OCTOBER CITY RAIL TRANSIT MONORAIL

The Authority | Hill International Consultant | Main Contractor | Structural Designer

KEY PLAN:

REV.	DATE	DSG	CHK	APP	AMENDMENTS	STATUS
B	12/05/2023	M.KH	M.KH	DR.M.M	ISSUED FOR INFORMATION	IFI
A	11/20/2022	M.KH	M.KH	DR.M.M	ISSUED FOR INFORMATION	IFI

SCALE AS SHOWN | SHOPDRAWING | DATE 12/05/2023

DRAWING TITLE
6TH OF OCTOBER MONORAIL
SERVICE WALKWAYS
ZONE (1008)
W580

Project Code	Rubric	Initiator	Lot	Ref	Number	Revision
9 3 M	0 4 7 6	A C C	6 0 D	E P	D W G	0 8 9 2 1	B

Tekla structures

approval is subject to approval of coordination package between multi-discipline

REVIEWED WITH COMMENT
MONORAILS PROJECT

All holes are 22mm U.N.O Length & Area & Weight per piece

Mark	Profile	Grade	QTY	Length	Area	Weight
W579	CHS48.3*4.0	S235JR	1	1163.9	0.17	5.1

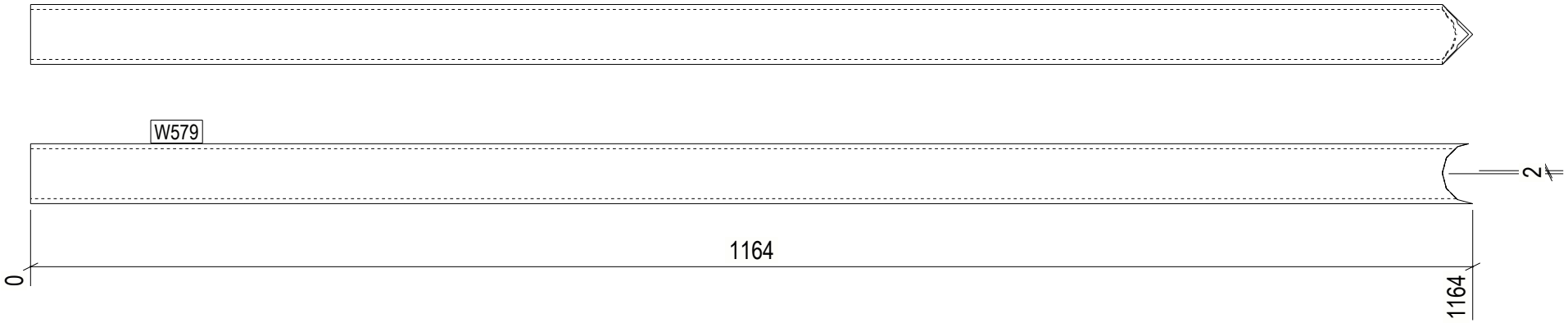

1 REQ'D AS DRAWN MK'D W579

6 October Monorail
Engineering Unit
Valid For Construction

GENERAL NOTES:

1. THE DIMENSIONS SHOWN ARE NOMINAL (IN MILLIMETERS), U.N.O.
2. WELD SIZESHALL BE AISC MINIMUM OF 6 mm UNLESS NOTED OTHERWISE.
3. ALL FIELD WELDS SHALL BE INSPECTED PER QUALITY ASSURANCE AND SPECIAL INSPECTIONS.

REFERENCE DRAWINGS

1	93M-BOA-NAT-LOT-04833
2	93M-BOA-NAT-LOT-09170
3	93M-BOA-NAT-LOT-01976
4	93M-BOA-NAT-LOT-20021
5	
6	
7	
8	
9	

6TH OF OCTOBER CITY RAIL TRANSIT MONORAIL

The Authority | Hill International Consultant | Main Contractor | Structural Designer

KEY PLAN:

REV.	DATE	DSG	CHK	APP	AMENDMENTS	STATUS
B	12/05/2023	M.KH	M.KH	DR.M.M	ISSUED FOR INFORMATION	IFI
A	11/20/2022	M.KH	M.KH	DR.M.M	ISSUED FOR INFORMATION	IFI

SCALE: AS SHOWN | SHOPDRAWING | DATE: 12/05/2023

DRAWING TITLE
6TH OF OCTOBER MONORAIL
SERVICE WALKWAYS
ZONE (1008)
W579

Project Code	Rubric	Initiator	Lot	Ref	Number	Revision
9 3 M	0 4 7 6	A C C	6 0 D E P	D W G	0 8 9 2 2	B

Tekla structures

approval is subject to approval of coordination package between multi-discipline

REVIEWED WITH COMMENT
MONORAILS PROJECT

All holes are 22mm U.N.O Length & Area & Weight per piece

Mark	Profile	Grade	QTY	Length	Area	Weight
W578	CHS48.3*4.0	S235JR	1	247.0	0.04	1.1

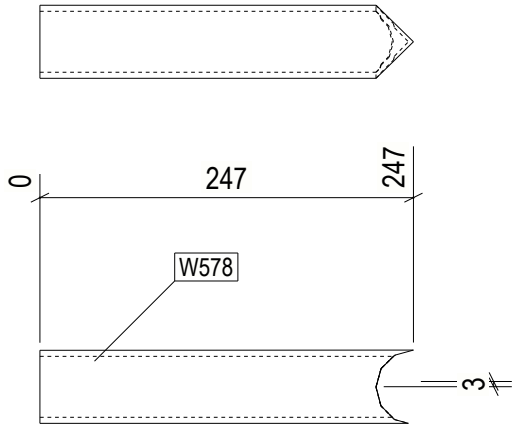

1 REQ'D AS DRAWN MK'D W578

6 October Monorail
Engineering Unit
Valid For Construction

GENERAL NOTES:

1. THE DIMENSIONS SHOWN ARE NOMINAL (IN MILLIMETERS), U.N.O.
2. WELD SIZESHALL BE AISC MINIMUM OF 6 mm UNLESS NOTED OTHERWISE.
3. ALL FIELD WELDS SHALL BE INSPECTED PER QUALITY ASSURANCE AND SPECIAL INSPECTIONS.

REFERENCE DRAWINGS

1	93M-BOA-NAT-LOT-04833
2	93M-BOA-NAT-LOT-09170
3	93M-BOA-NAT-LOT-01976
4	93M-BOA-NAT-LOT-20021
5	
6	
7	
8	
9	

6TH OF OCTOBER CITY RAIL TRANSIT MONORAIL

The Authority | Hill International Consultant | Main Contractor | Structural Designer

KEY PLAN:

REV	DATE	DSG	CHK	APP	AMENDMENTS	STATUS
B	12/05/2023	M.KH	M.KH	DR.M.M	ISSUED FOR INFORMATION	IFI
A	11/20/2022	M.KH	M.KH	DR.M.M	ISSUED FOR INFORMATION	IFI

SCALE: AS SHOWN | SHOPDRAWING | DATE: 12/05/2023

DRAWING TITLE
6TH OF OCTOBER MONORAIL
SERVICE WALKWAYS
ZONE (1008)
W578

Project Code	Rubric	Initiator	Lot	Ref	Number	Revision
9 3 M	0 4 7 6	A C C	6 0 D E P	D W G	0 8 9 2 3	B

Tekla structures

approval is subject to approval of coordination package between multi-discipline

REVIEWED WITH COMMENT
MONORAILS PROJECT

All holes are 22mm U.N.O Length & Area & Weight per piece

Mark	Profile	Grade	QTY	Length	Area	Weight
W577	CHS48.3*4.0	S235JR	2	482.3	0.07	2.1

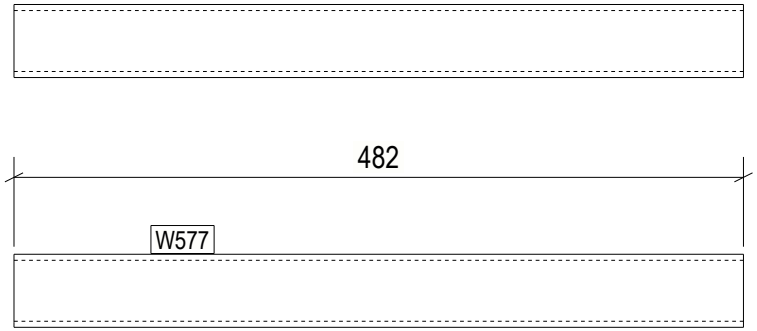

2 REQ'D AS DRAWN MK'D W577

6 October Monorail
Engineering Unit
Valid For Construction

GENERAL NOTES:

1. THE DIMENSIONS SHOWN ARE NOMINAL (IN MILLIMETERS), U.N.O.
2. WELD SIZESHALL BE AISC MINIMUM OF 6 mm UNLESS NOTED OTHERWISE.
3. ALL FIELD WELDS SHALL BE INSPECTED PER QUALITY ASSURANCE AND SPECIAL INSPECTIONS.

REFERENCE DRAWINGS

1	93M-BOA-NAT-LOT-04833
2	93M-BOA-NAT-LOT-09170
3	93M-BOA-NAT-LOT-01976
4	93M-BOA-NAT-LOT-20021
5	
6	
7	
8	
9	

6TH OF OCTOBER CITY RAIL TRANSIT MONORAIL

The Authority | Hill International Consultant | Main Contractor | Structural Designer

KEY PLAN:

REV.	DATE	DSG	CHK	APP	AMENDMENTS	STATUS
B	12/05/2023	M.KH	M.KH	DR.M.M	ISSUED FOR INFORMATION	IFI
A	11/20/2022	M.KH	M.KH	DR.M.M	ISSUED FOR INFORMATION	IFI

SCALE: AS SHOWN | SHOPDRAWING | DATE: 12/05/2023

DRAWING TITLE
6TH OF OCTOBER MONORAIL
SERVICE WALKWAYS
ZONE (1008)
W577

Project Code	Rubric	Initiator	Lot	Ref	Number	Revision
9 3 M	0 4 7 6	A C C	6 0	D E P	D W G	0 8 9 2 4	B

Tekla structures

approval is subject to approval of coordination package between multi-discipline

REVIEWED WITH COMMENT
MONORAILS PROJECT

Length & Area & Weight per piece						
W575	UPN220	S235JR	1	3975.1	2.86	116.7
Length & Area & Weight per piece						
W576	CHS48.3*4.0	S235JR	1	487.2	0.07	2.1
Mark	Profile	Grade	QTY	Length	Area	Weight

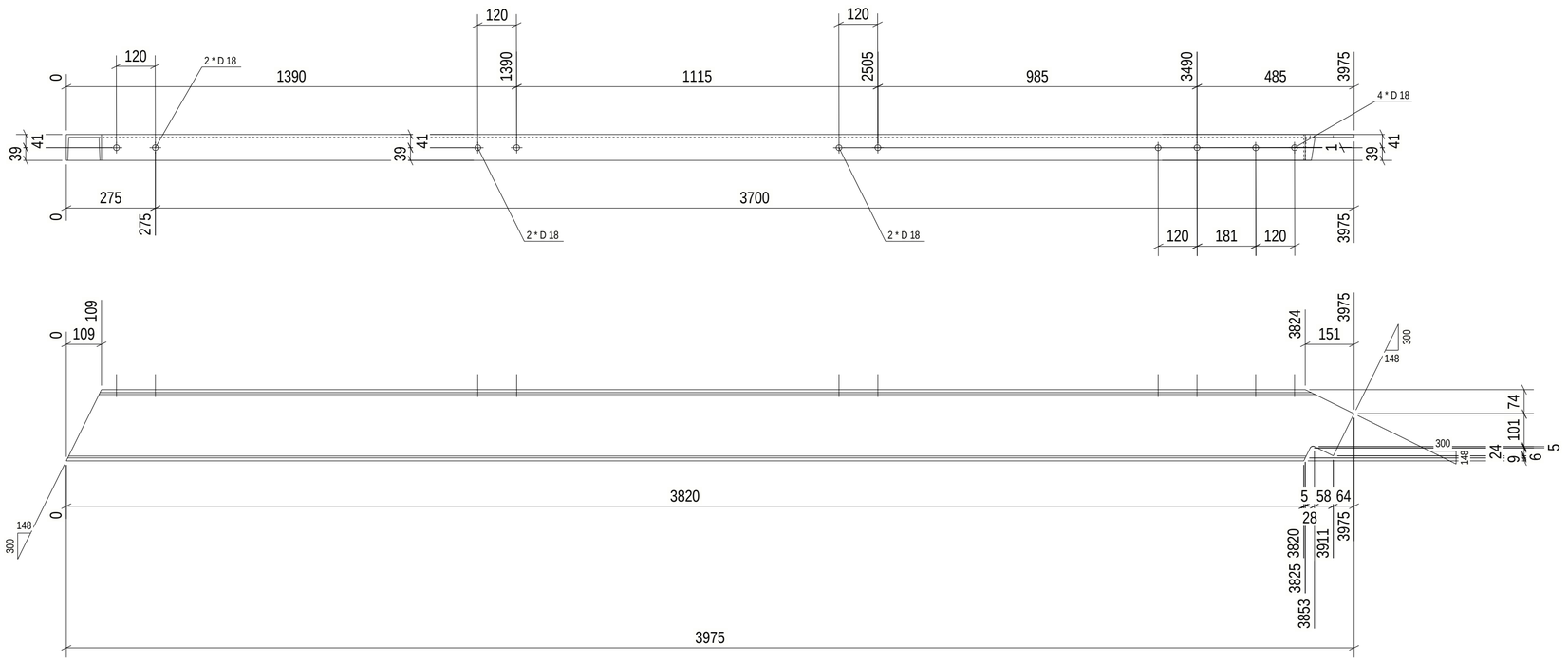

No. 1, Marked W575

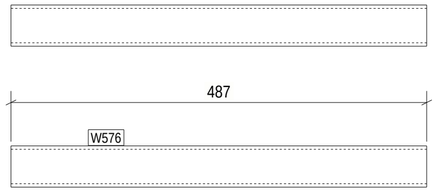

No. 1, Marked W576

1 REQ'D AS DRAWN MK'D W576
1 REQ'D AS DRAWN MK'D W575

6 October Monorail
Engineering Unit
Valid For Construction

GENERAL NOTES:

1. THE DIMENSIONS SHOWN ARE NOMINAL (IN MILLIMETERS), U.N.O.
2. WELD SIZESHALL BE AISC MINIMUM OF 6 mm UNLESS NOTED OTHERWISE.
3. ALL FIELD WELDS SHALL BE INSPECTED PER QUALITY ASSURANCE AND SPECIAL INSPECTIONS.

REFERENCE DRAWINGS

1	93M-BOA-NAT-LOT-04833
2	93M-BOA-NAT-LOT-09170
3	93M-BOA-NAT-LOT-01976
4	
5	
6	
7	
8	
9	

6TH OF OCTOBER CITY RAIL TRANSIT MONORAIL

The Authority | Hill International Consultant | Main Contractor | Structural Designer

KEY PLAN:

SCALE	SHOPDRAWING	DATE
AS SHOWN		12/20/2022

REV	DATE	DSG.	CHK.	APP.	AMENDMENTS	STATUS
A	11/20/2022	M.KH	M.KH	DR.M.M	ISSUED FOR INFORMATION	IFI

DRAWING TITLE

6TH OF OCTOBER MONORAIL
SERVICE WALKWAYS
ZONE (1008)
W575

Project Code	Rubric	Initiator	Lot	Ref	Number	Revision
93MBOA	0476	ACC	60DEP	DWG	08925	A

Tekla structures

Length & Area & Weight per piece						
W574	UPN220	S235JR	1	3975.2	2.86	116.7
Mark	Profile	Grade	QTY	Length	Area	Weight

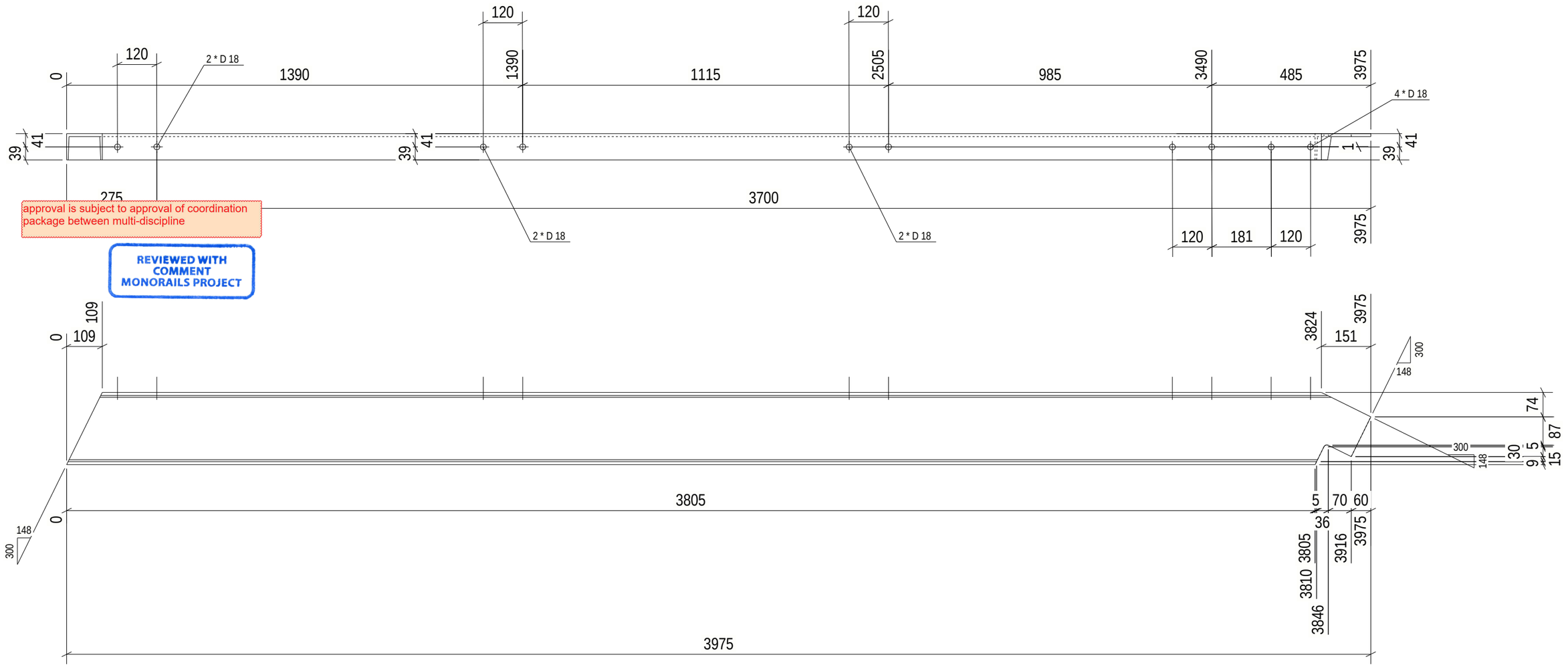

No. 1, Marked W574

1 REQ'D AS DRAWN MK'D W574

6 October Monorail Engineering Unit Valid For Construction

Tekla structures

GENERAL NOTES:

1. THE DIMENSIONS SHOWN ARE NOMINAL (IN MILLIMETERS), U.N.O.
2. WELD SIZESHALL BE AISC MINIMUM OF 6 mm UNLESS NOTED OTHERWISE.
3. ALL FIELD WELDS SHALL BE INSPECTED PER QUALITY ASSURANCE AND SPECIAL INSPECTIONS.

REFERENCE DRAWINGS

1	93M-BOA-NAT-LOT-04833
2	93M-BOA-NAT-LOT-09170
3	93M-BOA-NAT-LOT-01976
4	
5	
6	
7	
8	
9	

6TH OF OCTOBER CITY RAIL TRANSIT MONORAIL

The Authority — Hill International (Consultant) — Main Contractor — Structural Designer

KEY PLAN:

SCALE: AS SHOWN | SHOP DRAWING | DATE: 11/20/2022

REV	DATE	DSG.	CHK.	APP.	AMENDMENTS	STATUS
A	11/20/2022	M.KH	M.KH	DR.M.M	ISSUED FOR INFORMATION	IFI

DRAWING TITLE

6TH OF OCTOBER MONORAIL
SERVICE WALKWAYS
ZONE (1008)
W574

Project Code	Rubric	Initiator	Lot	Ref	Number	Revision
93M	047	ACC	60DEP	DWG	08926	A

Length & Area & Weight per piece						
W572	UPN220	S235JR	1	1974.9	1.42	58.0
Length & Area & Weight per piece						
W573	UPN220	S235JR	1	4045.4	2.91	118.8
Mark	Profile	Grade	QTY	Length	Area	Weight

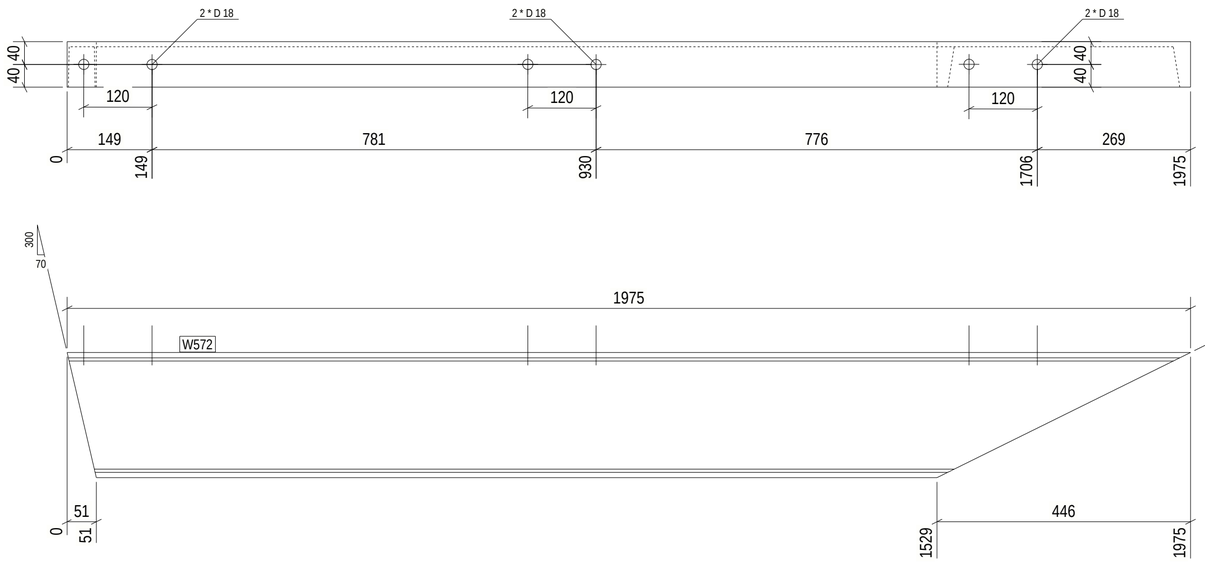

No. 1, Marked W572

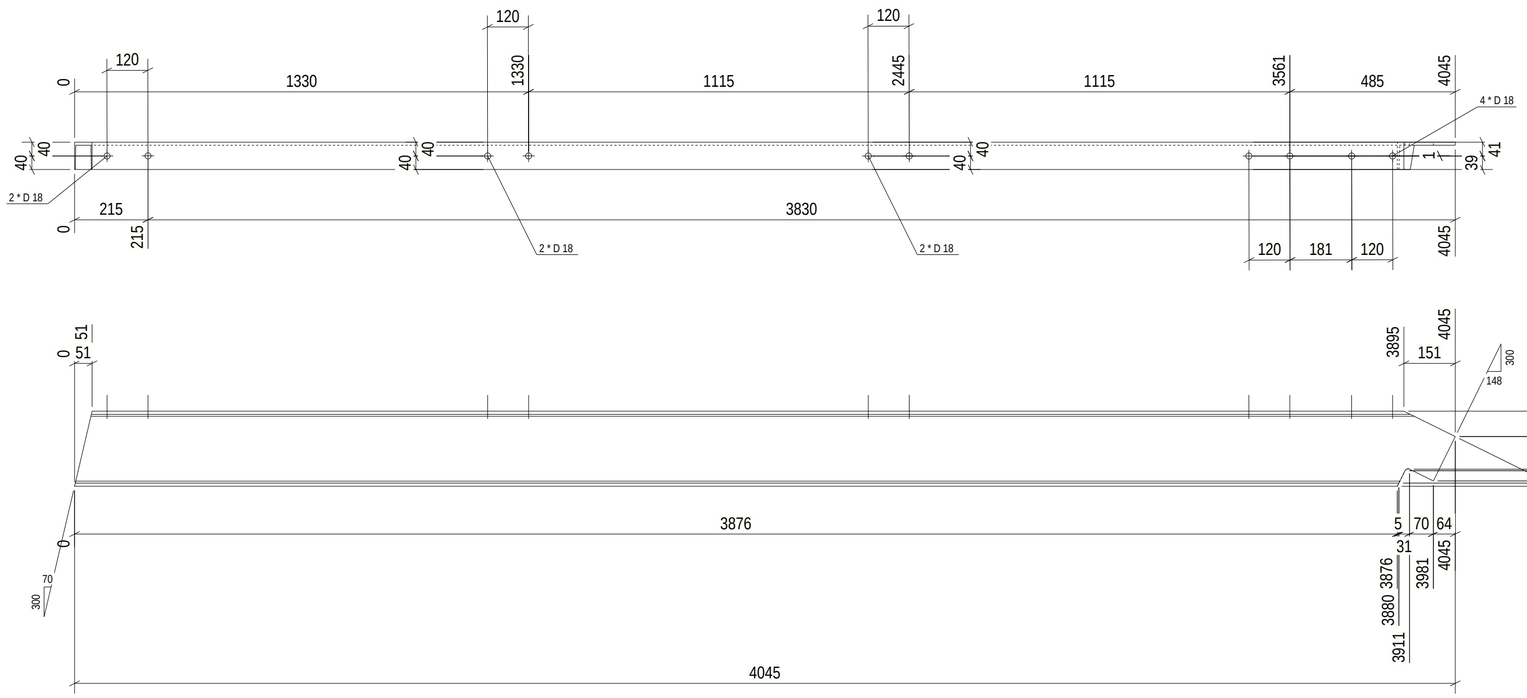

No. 1, Marked W573

1 REQ'D AS DRAWN MK'D W573
1 REQ'D AS DRAWN MK'D W572

approval is subject to approval of coordination package between multi-discipline

REVIEWED WITH COMMENT MONORAILS PROJECT

6 October Monorail Engineering Unit Valid For Construction

GENERAL NOTES:

1. THE DIMENSIONS SHOWN ARE NOMINAL (IN MILLIMETERS), U.N.O.
2. WELD SIZESHALL BE AISC MINIMUM OF 6 mm UNLESS NOTED OTHERWISE.
3. ALL FIELD WELDS SHALL BE INSPECTED PER QUALITY ASSURANCE AND SPECIAL INSPECTIONS.

REFERENCE DRAWINGS

1	93M-BOA-NAT-LOT-04833
2	93M-BOA-NAT-LOT-09170
3	93M-BOA-NAT-LOT-01976
4	
5	
6	
7	
8	
9	

6TH OF OCTOBER CITY RAIL TRANSIT MONORAIL

The Authority — Hill International (Consultant) — Main Contractor (ORASCOM CONSTRUCTION / BOMBARDIER) — Structural Designer (INNOVA TRANSPORTATION)

KEY PLAN:

SCALE	SHOPDRAWING	DATE
AS SHOWN		11/20/2022

REV	DATE	DSG.	CHK.	APP.	AMENDMENTS	STATUS
A	11/20/2022	M.KH	M.KH	DR.M.M	ISSUED FOR INFORMATION	IFI

DRAWING TITLE

6TH OF OCTOBER MONORAIL
SERVICE WALKWAYS
ZONE (1008)
W572

Project Code	Rubric	Initiator	Lot	Ref	Number	Revision
93M	047	6ACC	60DE	PDWG	08927	A

Tekla structures

approval is subject to approval of coordination package between multi-discipline

REVIEWED WITH COMMENT
MONORAILS PROJECT

Length & Area & Weight per piece						
W566	PL10*25	S355JR	6	78.2	0.01	0.1
Length & Area & Weight per piece						
W567	CHS48.3*4.0	S235JR	2	771.5	0.12	3.4
Length & Area & Weight per piece						
W568	CHS48.3*4.0	S235JR	1	1106.1	0.17	4.8
Length & Area & Weight per piece						
W569	PL10*25	S355JR	12	78.9	0.01	0.1
Length & Area & Weight per piece						
W570	CHS48.3*4.0	S235JR	3	345.7	0.05	1.5
Length & Area & Weight per piece						
W571	UPN220	S235JR	1	1974.9	1.42	58.0
Mark	Profile	Grade	QTY	Length	Area	Weight

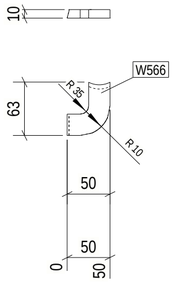

No. 6, Marked W566

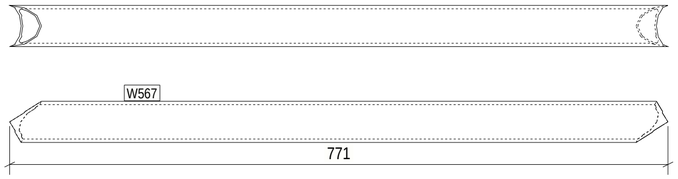

No. 2, Marked W567

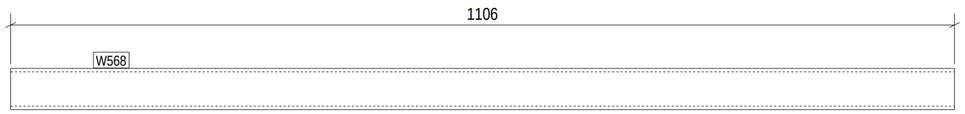

No. 1, Marked W568

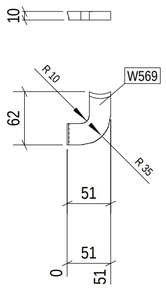

No. 12, Marked W569

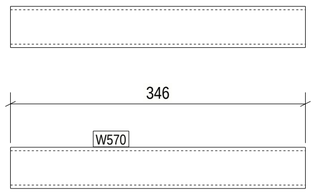

No. 3, Marked W570

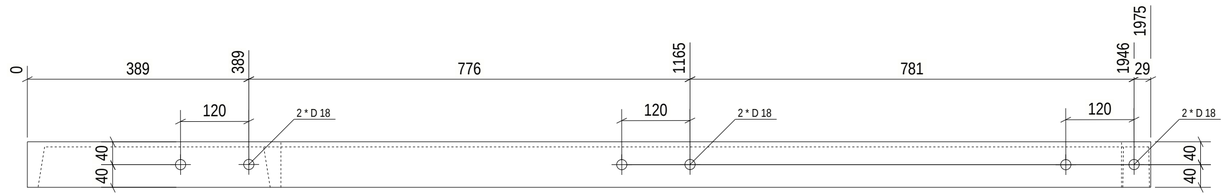

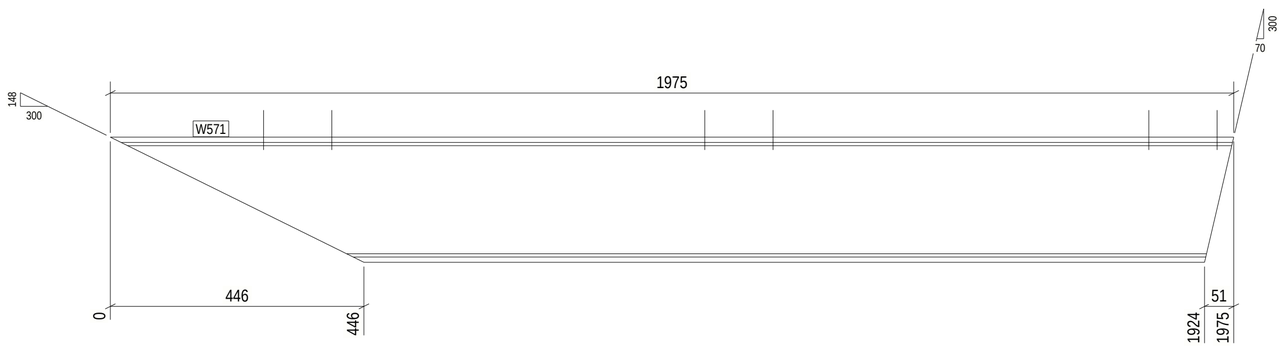

No. 1, Marked W571

1 REQ'D AS DRAWN MK'D W571
3 REQ'D AS DRAWN MK'D W570
12 REQ'D AS DRAWN MK'D W569
1 REQ'D AS DRAWN MK'D W568
2 REQ'D AS DRAWN MK'D W567
6 REQ'D AS DRAWN MK'D W566

6 October Monorail
Engineering Unit
Valid For Construction

GENERAL NOTES:

1. THE DIMENSIONS SHOWN ARE NOMINAL (IN MILLIMETERS), U.N.O.
2. WELD SIZESHALL BE AISC MINIMUM OF 6 mm UNLESS NOTED OTHERWISE.
3. ALL FIELD WELDS SHALL BE INSPECTED PER QUALITY ASSURANCE AND SPECIAL INSPECTIONS.

REFERENCE DRAWINGS

1	93M-BOA-NAT-LOT-04833
2	93M-BOA-NAT-LOT-09170
3	93M-BOA-NAT-LOT-01976
4	
5	
6	
7	
8	
9	

6TH OF OCTOBER CITY RAIL TRANSIT MONORAIL

The Authority — Hill International (Consultant) — Main Contractor — Structural Designer

KEY PLAN:

SCALE	SHOPDRAWING	DATE
AS SHOWN		12/20/2022

REV	DATE	DSG.	CHK.	APP.	AMENDMENTS	STATUS
A	11/20/2022	M.KH	M.KH	DR.M.M	ISSUED FOR INFORMATION	IFI

DRAWING TITLE

6TH OF OCTOBER MONORAIL
SERVICE WALKWAYS
ZONE (1008)
W566

Project Code	Rubric	Initiator	Lot	Ref	Number	Revision
93M	047	6ACC	60DE	PDWG	0892	A

Tekla structures

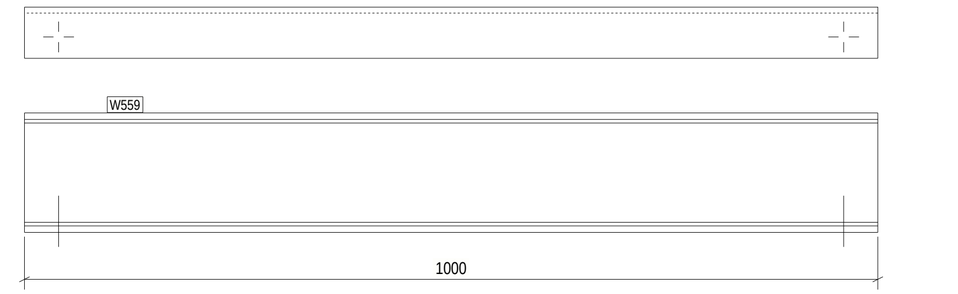

No. 1, Marked W559

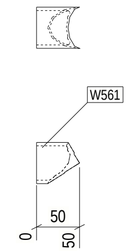

No. 1, Marked W561

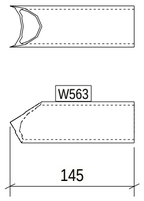

No. 1, Marked W563

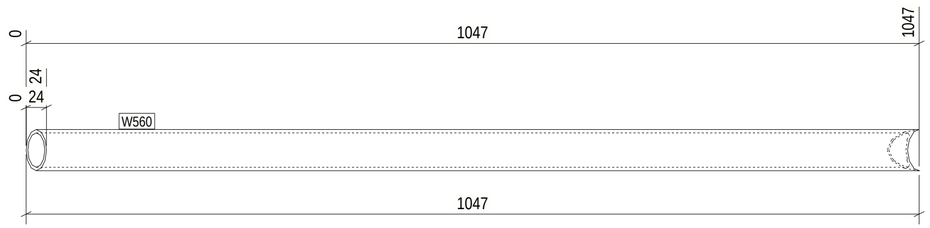

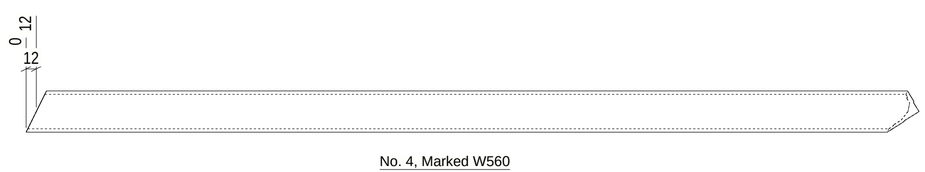

No. 4, Marked W560

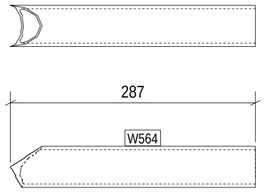

No. 1, Marked W564

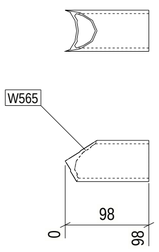

No. 1, Marked W565

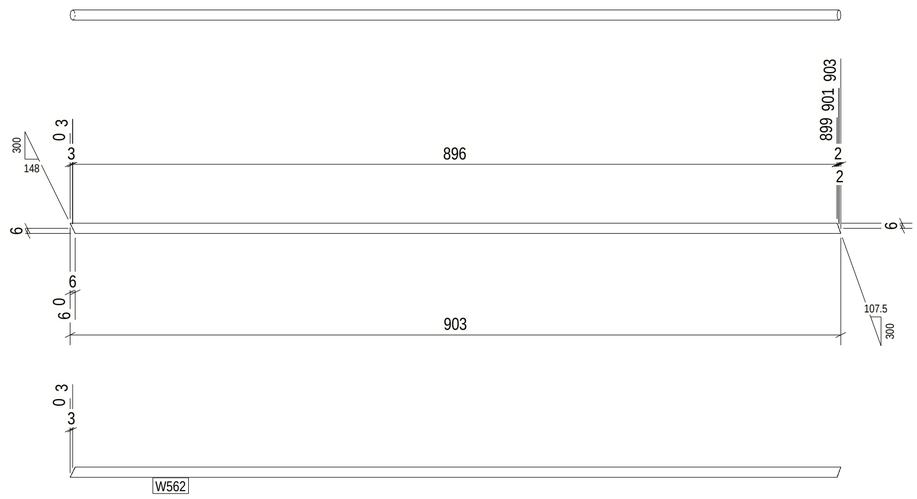

No. 2, Marked W562

Length & Area & Weight per piece						
W559	UPN140	S235JR	1	1000.1	0.49	16.0
Length & Area & Weight per piece						
W560	CHS48.3*4.0	S235JR	4	1046.6	0.16	4.6
Length & Area & Weight per piece						
W561	CHS48.3*4.0	S235JR	1	50.4	0.01	0.2
Length & Area & Weight per piece						
W562	ROD12	S355JR	2	903.2	0.03	0.7
Length & Area & Weight per piece						
W563	CHS48.3*4.0	S235JR	1	145.5	0.02	0.6
Length & Area & Weight per piece						
W564	CHS48.3*4.0	S235JR	1	287.2	0.04	1.3
Length & Area & Weight per piece						
W565	CHS48.3*4.0	S235JR	1	98.1	0.01	0.4
Mark	Profile	Grade	QTY	Length	Area	Weight

approval is subject to approval of coordination package between multi-discipline

REVIEWED WITH COMMENT MONORAILS PROJECT

1 REQ'D AS DRAWN MK'D W565
1 REQ'D AS DRAWN MK'D W564
1 REQ'D AS DRAWN MK'D W563
2 REQ'D AS DRAWN MK'D W562
1 REQ'D AS DRAWN MK'D W561
4 REQ'D AS DRAWN MK'D W560
1 REQ'D AS DRAWN MK'D W559

6 October Monorail
Engineering Unit
Valid For Construction

GENERAL NOTES:

1. THE DIMENSIONS SHOWN ARE NOMINAL (IN MILLIMETERS), U.N.O.
2. WELD SIZESHALL BE AISC MINIMUM OF 6 mm UNLESS NOTED OTHERWISE.
3. ALL FIELD WELDS SHALL BE INSPECTED PER QUALITY ASSURANCE AND SPECIAL INSPECTIONS.

REFERENCE DRAWINGS

1	93M-BOA-NAT-LOT-04833
2	93M-BOA-NAT-LOT-09170
3	93M-BOA-NAT-LOT-01976
4	
5	
6	
7	
8	
9	

6TH OF OCTOBER CITY RAIL TRANSIT MONORAIL

The Authority | Hill International Consultant | Main Contractor | Structural Designer

KEY PLAN:

REV	DATE	DSG.	CHK.	APP.	AMENDMENTS	STATUS
A	11/20/2022	M.KH	M.KH	DR.M.M	ISSUED FOR INFORMATION	IFI

SCALE: AS SHOWN | SHOPDRAWING | DATE: 11/20/2022

DRAWING TITLE
6TH OF OCTOBER MONORAIL
SERVICE WALKWAYS
ZONE (1008)
W559

Project Code	Rubric	Initiator	Lot	Ref	Number	Revision
93	M047	ACC60	DEP	DWG	0892	A

Tekla structures

approval is subject to approval of coordination package between multi-discipline

REVIEWED WITH COMMENT
MONORAILS PROJECT

Length & Area & Weight per piece						
W555	CHQD_PL5*470	S235JR	36	990.0	0.94	18.2
Length & Area & Weight per piece						
W556	CHS48.3*4.0	S235JR	1	138.6	0.02	0.6
Length & Area & Weight per piece						
W557	CHQD_PL5*637.1	S235JR	1	1000.0	1.29	24.9
Length & Area & Weight per piece						
W558	L70*7	S235JR	1	1159.9	0.33	8.5
Mark	Profile	Grade	QTY	Length	Area	Weight

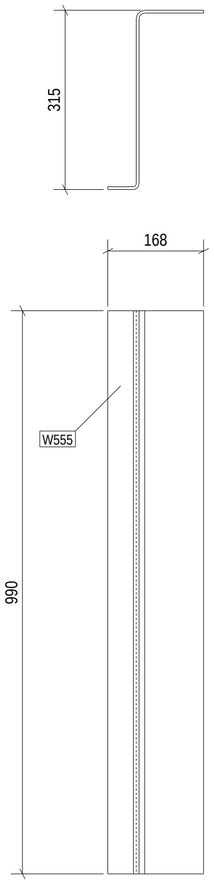

No. 36, Marked W555

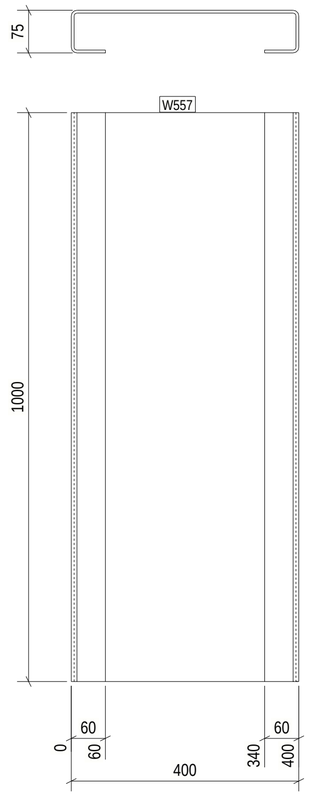

No. 1, Marked W557

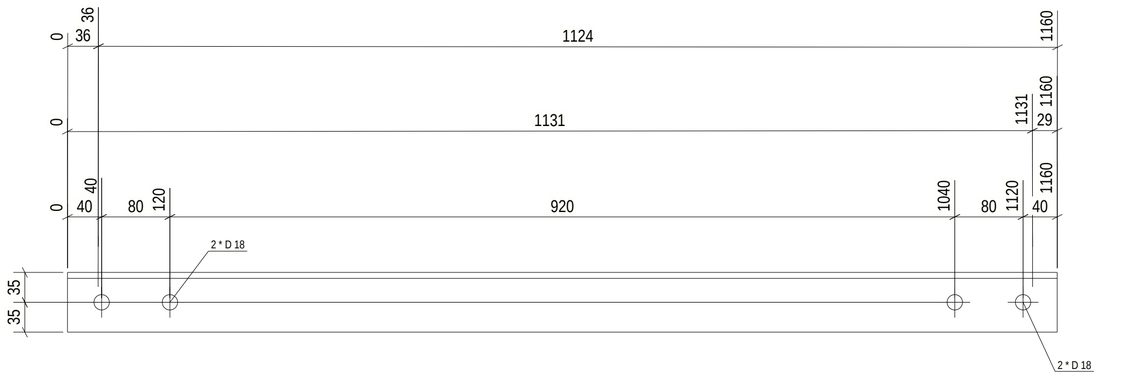

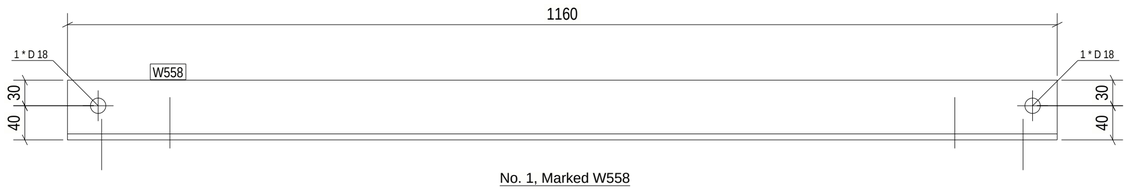

No. 1, Marked W558

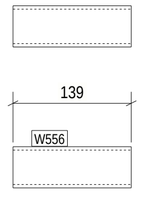

No. 1, Marked W556

1 REQ'D AS DRAWN MK'D W558
1 REQ'D AS DRAWN MK'D W557
1 REQ'D AS DRAWN MK'D W556
36 REQ'D AS DRAWN MK'D W555

6 October Monorail
Engineering Unit
Valid For Construction

GENERAL NOTES:

1. THE DIMENSIONS SHOWN ARE NOMINAL (IN MILLIMETERS), U.N.O.
2. WELD SIZESHALL BE AISC MINIMUM OF 6 mm UNLESS NOTED OTHERWISE.
3. ALL FIELD WELDS SHALL BE INSPECTED PER QUALITY ASSURANCE AND SPECIAL INSPECTIONS.

REFERENCE DRAWINGS

1	93M-BOA-NAT-LOT-04833
2	93M-BOA-NAT-LOT-09170
3	93M-BOA-NAT-LOT-01976
4	
5	
6	
7	
8	
9	

6TH OF OCTOBER CITY RAIL TRANSIT MONORAIL

The Authority | Hill International Consultant | Main Contractor | Structural Designer

KEY PLAN:

SCALE	SHOPDRAWING	DATE
AS SHOWN		12/20/2022

DRAWING TITLE
6TH OF OCTOBER MONORAIL
SERVICE WALKWAYS
ZONE (1008)
W555

REV	DATE	DSG.	CHK.	APP.	AMENDMENTS	STATUS
A	11/20/2022	M.KH	M.KH	DR.M.M	ISSUED FOR INFORMATION	IFI

Project Code	Rubric	Initiator	Lot	Ref	Number	Revision
93	M047	6ACC	60DEP	DWG	0893	0 A

Tekla structures

approval is subject to approval of coordination package between multi-discipline

REVIEWED WITH COMMENT
MONORAILS PROJECT

Length & Area & Weight per piece						
W532	PL10*307.8	S355JR	2	370.0	0.19	6.8
Length & Area & Weight per piece						
W533	L70*7	S235JR	2	1130.0	0.32	8.3
Length & Area & Weight per piece						
W534	PL8*131.9	S355JR	1	299.9	0.05	1.5
Length & Area & Weight per piece						
W554	L70*7	S235JR	2	1160.1	0.33	8.5
Mark	Profile	Grade	QTY	Length	Area	Weight

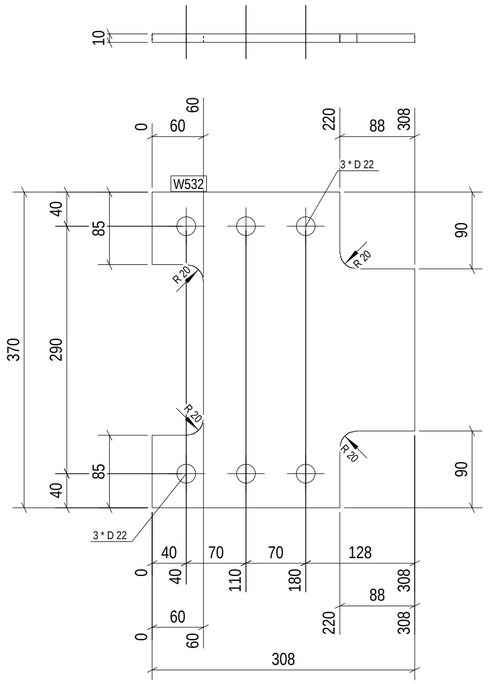

No. 2, Marked W532

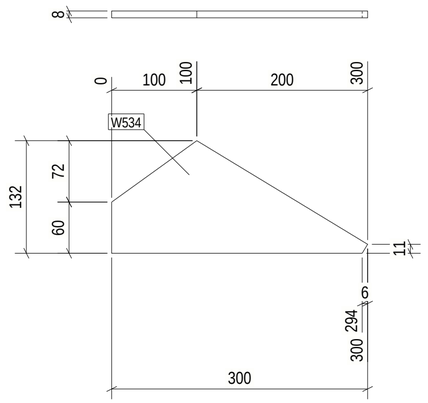

No. 1, Marked W534

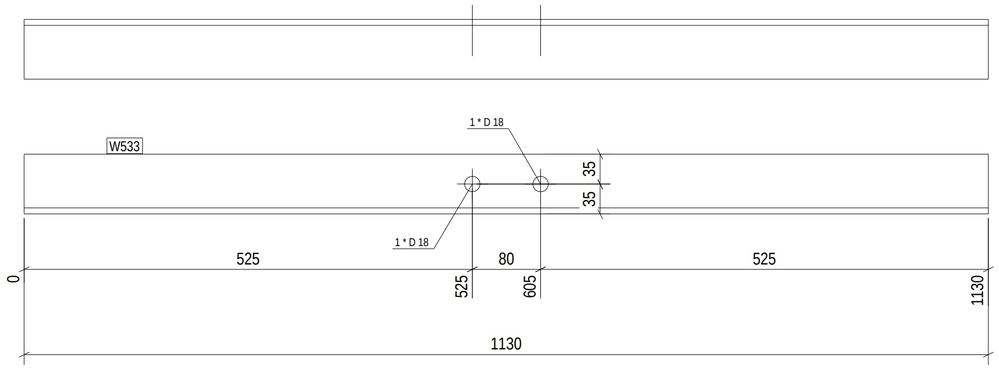

No. 2, Marked W533

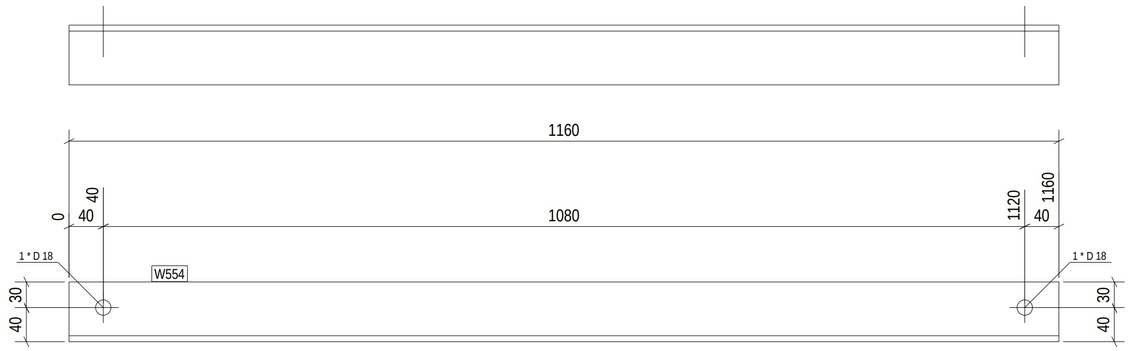

No. 2, Marked W554

2 REQ'D AS DRAWN MK'D W554
1 REQ'D AS DRAWN MK'D W534
2 REQ'D AS DRAWN MK'D W533
2 REQ'D AS DRAWN MK'D W532

6 October Monorail
Engineering Unit
Valid For Construction

GENERAL NOTES:

1. THE DIMENSIONS SHOWN ARE NOMINAL (IN MILLIMETERS), U.N.O.
2. WELD SIZESHALL BE AISC MINIMUM OF 6 mm UNLESS NOTED OTHERWISE.
3. ALL FIELD WELDS SHALL BE INSPECTED PER QUALITY ASSURANCE AND SPECIAL INSPECTIONS.

REFERENCE DRAWINGS

1	93M-BOA-NAT-LOT-04833
2	93M-BOA-NAT-LOT-09170
3	93M-BOA-NAT-LOT-01976
4	
5	
6	
7	
8	
9	

6TH OF OCTOBER CITY RAIL TRANSIT MONORAIL

The Authority — Hill International (Consultant) — Main Contractor — Structural Designer

KEY PLAN:

SCALE	SHOPDRAWING	DATE
AS SHOWN		11/20/2022

REV	DATE	DSG.	CHK.	APP.	AMENDMENTS	STATUS
A	11/20/2022	M.KH	M.KH	DR.M.M	ISSUED FOR INFORMATION	IFI

DRAWING TITLE

6TH OF OCTOBER MONORAIL
SERVICE WALKWAYS
ZONE (1008)
W532

Project Code	Rubric	Initiator	Lot	Ref	Number	Revision
93M	047	ACC	60DEP	DWG	0893	1 A

Tekla structures

approval is subject to approval of coordination package between multi-discipline

REVIEWED WITH COMMENT MONORAILS PROJECT

Length & Area & Weight per piece						
W526	PL25*300	S355JR	1	300.0	0.21	17.7
Length & Area & Weight per piece						
W527	PL8*160.9	S355JR	2	329.7	0.06	1.8
Length & Area & Weight per piece						
W528	PL8*220.8	S355JR	3	617.4	0.25	7.5
Length & Area & Weight per piece						
W529	PL8*286.7	S355JR	3	487.7	0.25	7.4
Length & Area & Weight per piece						
W530	UPN160	S235JR	1	5918.0	3.25	111.5
Length & Area & Weight per piece						
W531	L60*6	S235JR	1	1761.7	0.42	9.5
Mark	Profile	Grade	QTY	Length	Area	Weight

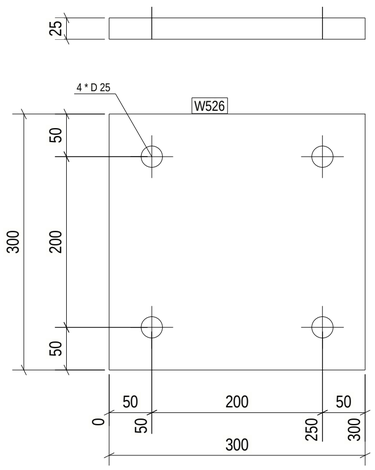

No. 1, Marked W526

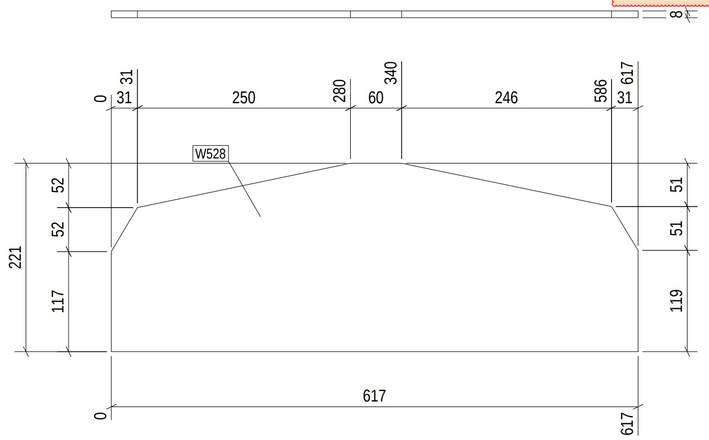

No. 3, Marked W528

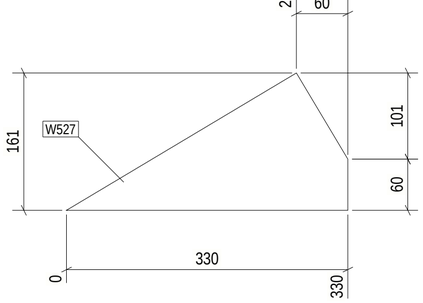

No. 2, Marked W527

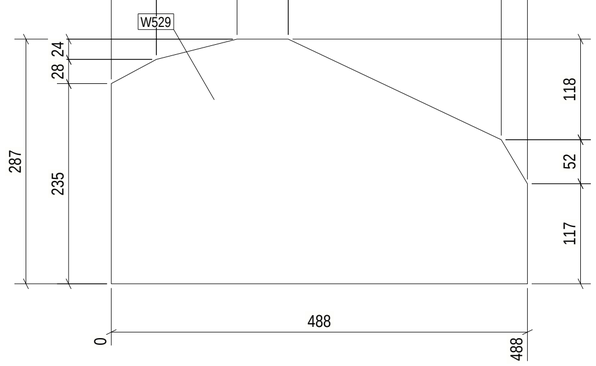

No. 3, Marked W529

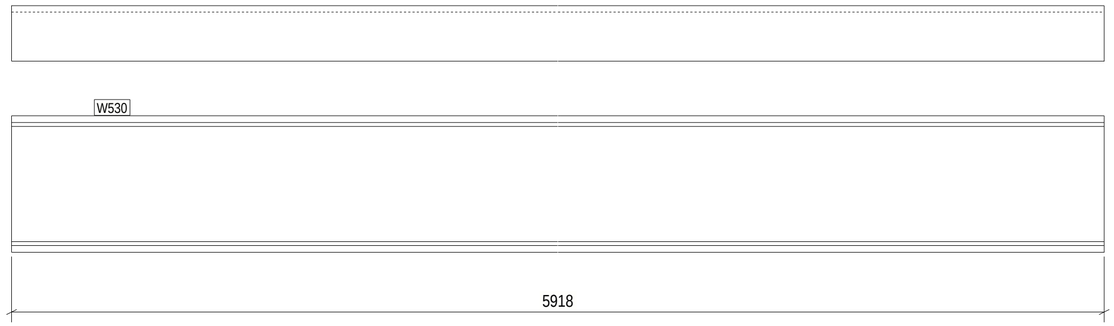

No. 1, Marked W530

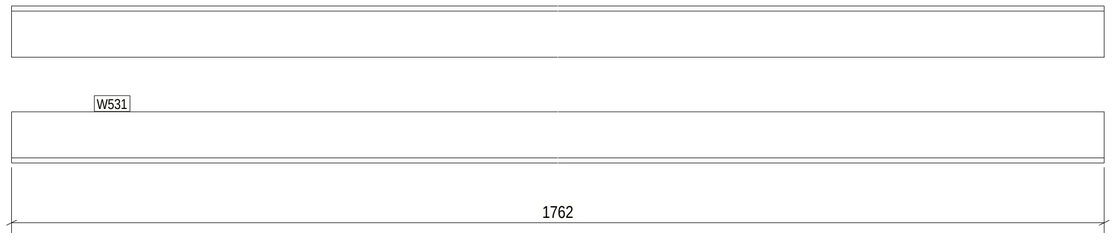

No. 1, Marked W531

1 REQ'D AS DRAWN MK'D W531
1 REQ'D AS DRAWN MK'D W530
3 REQ'D AS DRAWN MK'D W529
3 REQ'D AS DRAWN MK'D W528
2 REQ'D AS DRAWN MK'D W527
1 REQ'D AS DRAWN MK'D W526

GENERAL NOTES:

1. THE DIMENSIONS SHOWN ARE NOMINAL (IN MILLIMETERS), U.N.O.
2. WELD SIZESHALL BE AISC MINIMUM OF 6 mm UNLESS NOTED OTHERWISE.
3. ALL FIELD WELDS SHALL BE INSPECTED PER QUALITY ASSURANCE AND SPECIAL INSPECTIONS.

REFERENCE DRAWINGS

1	93M-BOA-NAT-LOT-04833
2	93M-BOA-NAT-LOT-09170
3	93M-BOA-NAT-LOT-01976
4	
5	
6	
7	
8	
9	

6TH OF OCTOBER CITY RAIL TRANSIT MONORAIL

The Authority | Hill International Consultant | Main Contractor | Structural Designer

KEY PLAN:

6 October Monorail Engineering Unit Valid For Construction

SCALE	SHOPDRAWING	DATE
AS SHOWN		11/20/2022

DRAWING TITLE

6TH OF OCTOBER MONORAIL
SERVICE WALKWAYS
ZONE (1008)
W526

REV	DATE	DSG.	CHK.	APP.	AMENDMENTS	STATUS
A	11/20/2022	M.KH	M.KH	DR.M.M	ISSUED FOR INFORMATION	IFI

Project Code	Rubric	Initiator	Lot	Ref	Number	Revision
93	M047	ACC	60DEP	DWG	0893	2 A

Tekla structures

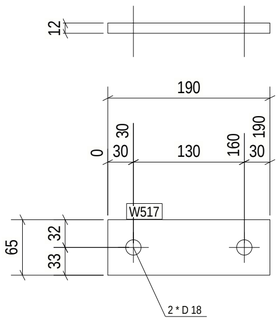

No. 9, Marked W517

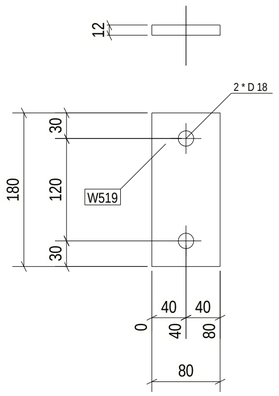

No. 51, Marked W519

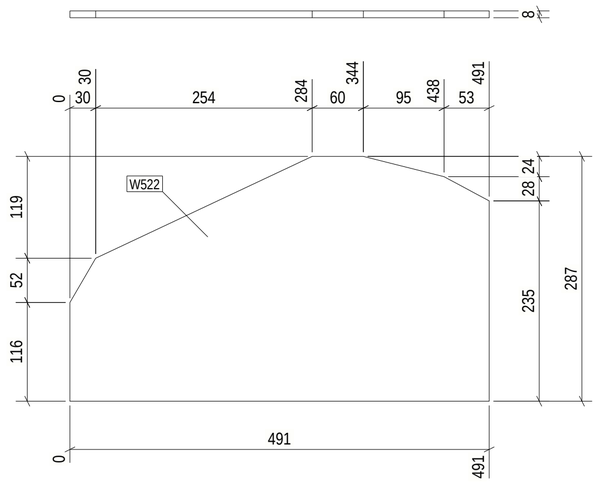

No. 2, Marked W522

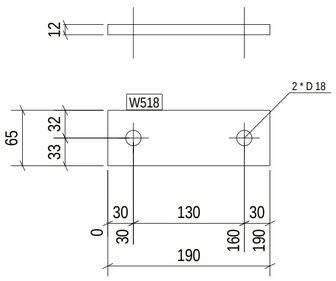

No. 1, Marked W518

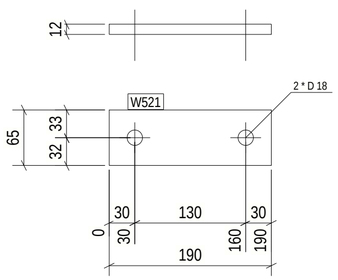

No. 1, Marked W521

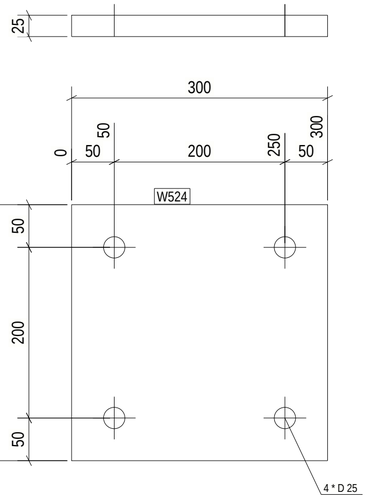

No. 2, Marked W524

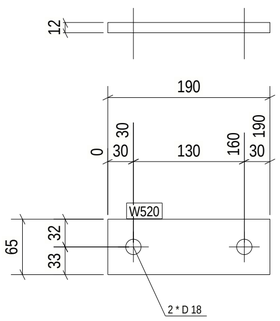

No. 2, Marked W520

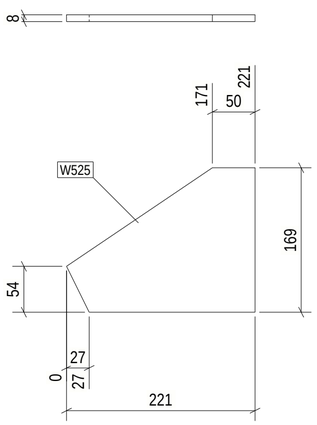

No. 2, Marked W525

Length & Area & Weight per piece						
W517	PL12*65	S355JR	9	190.0	0.03	1.2
Length & Area & Weight per piece						
W518	PL12*65	S355JR	1	190.0	0.03	1.2
Length & Area & Weight per piece						
W519	PL12*80	S355JR	51	180.0	0.04	1.4
Length & Area & Weight per piece						
W520	PL12*65	S355JR	2	190.0	0.03	1.2
Length & Area & Weight per piece						
W521	PL12*65	S355JR	1	190.0	0.03	1.2
Length & Area & Weight per piece						
W522	PL8*286.9	S355JR	2	491.3	0.25	7.4
Length & Area & Weight per piece						
W523	PL8*221.1	S355JR	2	615.8	0.25	7.5
Length & Area & Weight per piece						
W524	PL25*300	S355JR	2	300.0	0.21	17.7
Length & Area & Weight per piece						
W525	PL8*169.3	S355JR	2	220.9	0.06	1.7
Mark	Profile	Grade	QTY	Length	Area	Weight

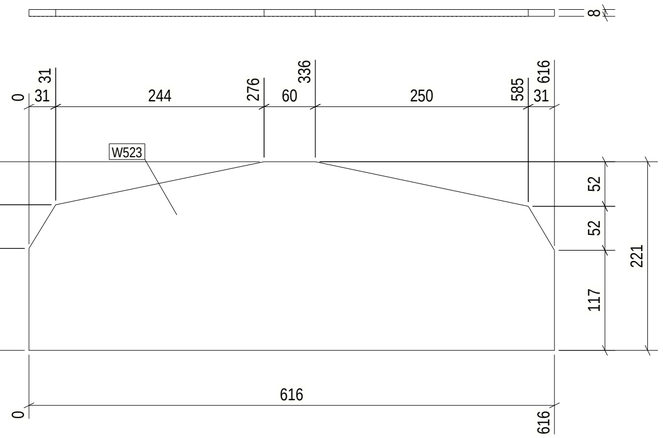

No. 2, Marked W523

approval is subject to approval of coordination package between multi-discipline

REVIEWED WITH COMMENT MONORAILS PROJECT

2 REQ'D AS DRAWN MK'D W525
2 REQ'D AS DRAWN MK'D W524
2 REQ'D AS DRAWN MK'D W523
2 REQ'D AS DRAWN MK'D W522
1 REQ'D AS DRAWN MK'D W521
2 REQ'D AS DRAWN MK'D W520
51 REQ'D AS DRAWN MK'D W519
1 REQ'D AS DRAWN MK'D W518
9 REQ'D AS DRAWN MK'D W517

6 October Monorail Engineering Unit
Valid For Construction

GENERAL NOTES:

1. THE DIMENSIONS SHOWN ARE NOMINAL (IN MILLIMETERS), U.N.O.
2. WELD SIZESHALL BE AISC MINIMUM OF 6 mm UNLESS NOTED OTHERWISE.
3. ALL FIELD WELDS SHALL BE INSPECTED PER QUALITY ASSURANCE AND SPECIAL INSPECTIONS.

REFERENCE DRAWINGS

1	93M-BOA-NAT-LOT-04833
2	93M-BOA-NAT-LOT-09170
3	93M-BOA-NAT-LOT-01976
4	
5	
6	
7	
8	
9	

6TH OF OCTOBER CITY RAIL TRANSIT MONORAIL

The Authority | Hill International Consultant | ORASCOM BOMBARDIER Main Contractor | INNOVA Structural Designer

KEY PLAN:

SCALE	SHOPDRAWING	DATE
AS SHOWN		11/20/2022

REV	DATE	DSG.	CHK.	APP.	AMENDMENTS	STATUS
A	11/20/2022	M.KH	M.KH	DR.M.M	ISSUED FOR INFORMATION	IFI

DRAWING TITLE

6TH OF OCTOBER MONORAIL SERVICE WALKWAYS ZONE (1008) W517

Project Code	Rubric	Initiator	Lot	Ref	Number	Revision
9 3 M	0 4 7 6	A C C	6 0 D E P	D W G	0 8 9 3 3	A

Tekla structures

Length & Area & Weight per piece						
W509	PL8*169.2	S355JR	15	238.1	0.06	1.6
Length & Area & Weight per piece						
W510	PL8*228.2	S355JR	3	594.0	0.24	7.3
Length & Area & Weight per piece						
W511	PL8*132	S355JR	1	280.2	0.05	1.4
Length & Area & Weight per piece						
W512	PL8*250	S355JR	2	559.2	0.24	7.2
Length & Area & Weight per piece						
W513	PL8*162	S355JR	1	285.9	0.06	1.7
Length & Area & Weight per piece						
W514	CHS48.3*4.0	S235JR	4	89.5	0.01	0.4
Length & Area & Weight per piece						
W515	PL8*50	S355JR	3	70.0	0.01	0.2
Length & Area & Weight per piece						
W516	PL12*65	S355JR	6	190.0	0.03	1.2
Mark	Profile	Grade	QTY	Length	Area	Weight

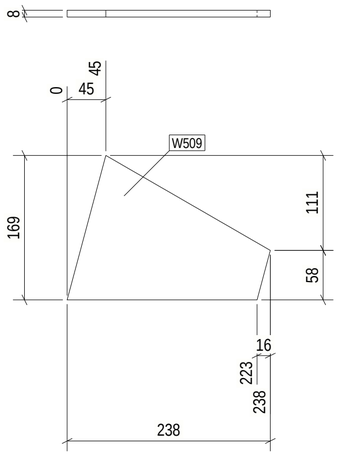

No. 15, Marked W509

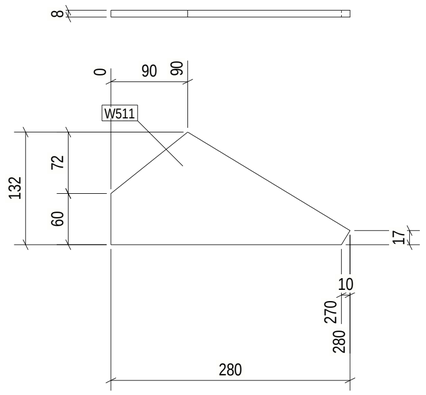

No. 1, Marked W511

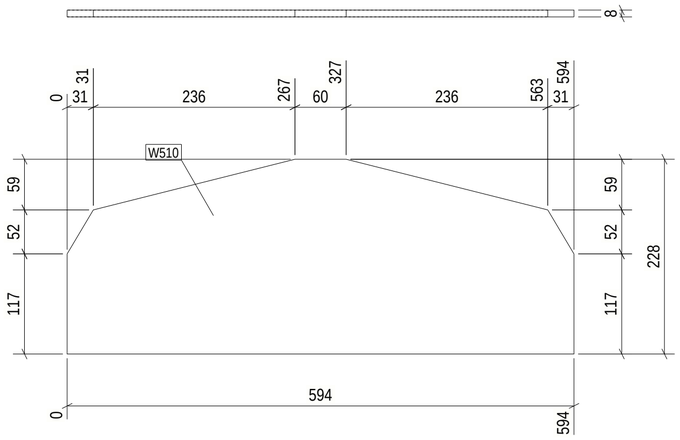

No. 3, Marked W510

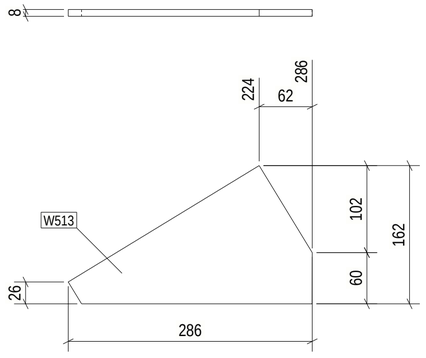

No. 1, Marked W513

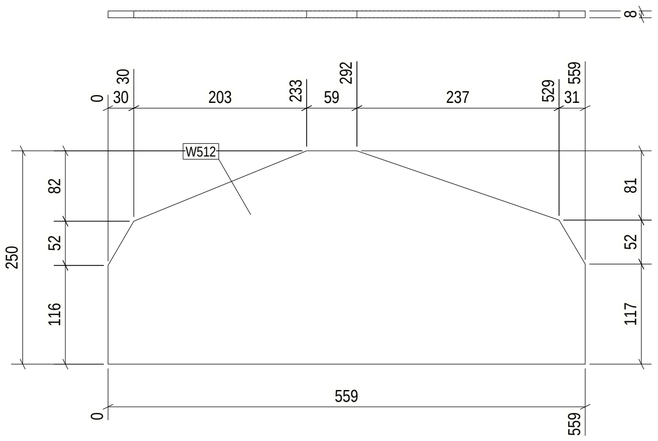

No. 2, Marked W512

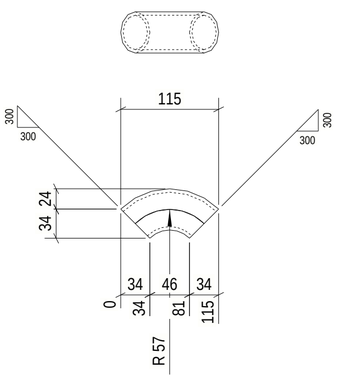

No. 4, Marked W514

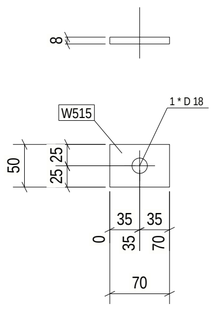

No. 3, Marked W515

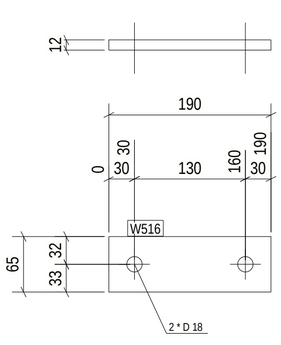

No. 6, Marked W516

approval is subject to approval of coordination package between multi-discipline

REVIEWED WITH COMMENT MONORAILS PROJECT

6 REQ'D AS DRAWN MK'D W516
3 REQ'D AS DRAWN MK'D W515
4 REQ'D AS DRAWN MK'D W514
1 REQ'D AS DRAWN MK'D W513
2 REQ'D AS DRAWN MK'D W512
1 REQ'D AS DRAWN MK'D W511
3 REQ'D AS DRAWN MK'D W510
15 REQ'D AS DRAWN MK'D W509

6 October Monorail
Engineering Unit
Valid For Construction

GENERAL NOTES:

1. THE DIMENSIONS SHOWN ARE NOMINAL (IN MILLIMETERS), U.N.O.
2. WELD SIZESHALL BE AISC MINIMUM OF 6 mm UNLESS NOTED OTHERWISE.
3. ALL FIELD WELDS SHALL BE INSPECTED PER QUALITY ASSURANCE AND SPECIAL INSPECTIONS.

REFERENCE DRAWINGS

1	93M-BOA-NAT-LOT-04833
2	93M-BOA-NAT-LOT-09170
3	93M-BOA-NAT-LOT-01976
4	
5	
6	
7	
8	
9	

6TH OF OCTOBER CITY RAIL TRANSIT MONORAIL

The Authority | Consultant: Hill International | Main Contractor: ORASCOM CONSTRUCTION, BOMBARDIER | Structural Designer: INNOVA TRANSPORTATION

KEY PLAN:

SCALE	SHOPDRAWING	DATE
AS SHOWN		12/20/2022

REV	DATE	DSG.	CHK.	APP.	AMENDMENTS	STATUS
A	11/20/2022	M.KH	M.KH	DR.M.M	ISSUED FOR INFORMATION	IFI

DRAWING TITLE

6TH OF OCTOBER MONORAIL
SERVICE WALKWAYS
ZONE (1008)
W509

Project Code	Rubric	Initiator	Lot	Ref	Number	Revision
93MBOA	0476	ACC60	DEP	DWG	08934	A

Tekla structures

approval is subject to approval of coordination package between multi-discipline

REVIEWED WITH COMMENT MONORAILS PROJECT

Length & Area & Weight per piece						
W502	PL8*120.8	S355JR	8	183.4	0.04	1.0
Length & Area & Weight per piece						
W503	PL8*120.2	S355JR	8	185.2	0.04	1.0
Length & Area & Weight per piece						
W504	PL8*316.1	S355JR	4	423.7	0.23	6.9
Length & Area & Weight per piece						
W505	PL8*164.1	S355JR	8	227.8	0.05	1.5
Length & Area & Weight per piece						
W506	PL8*103.9	S355JR	1	411.8	0.07	2.0
Length & Area & Weight per piece						
W507	PL8*252.9	S355JR	4	482.9	0.21	6.1
Length & Area & Weight per piece						
W508	PL8*126.3	S355JR	8	167.9	0.03	1.0
Mark	Profile	Grade	QTY	Length	Area	Weight

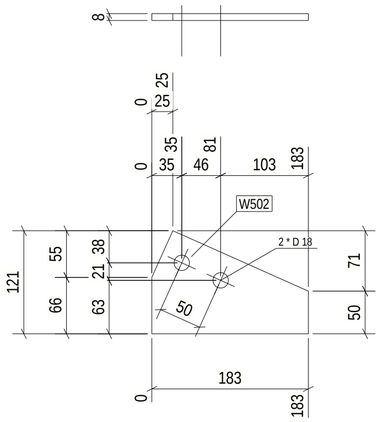

No. 8, Marked W502

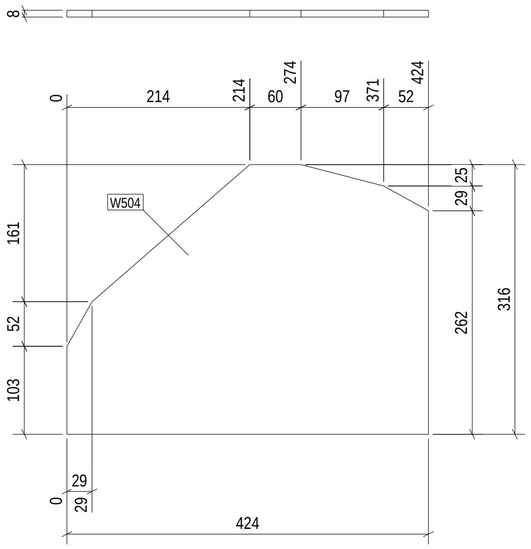

No. 4, Marked W504

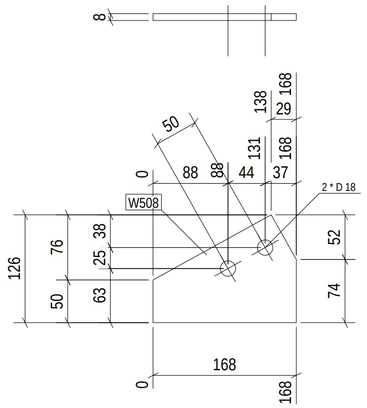

No. 8, Marked W508

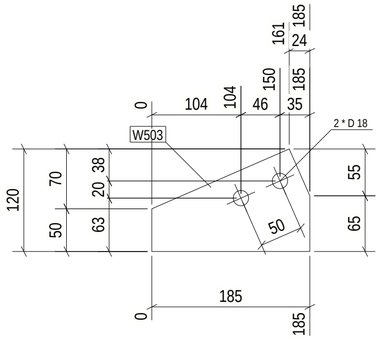

No. 8, Marked W503

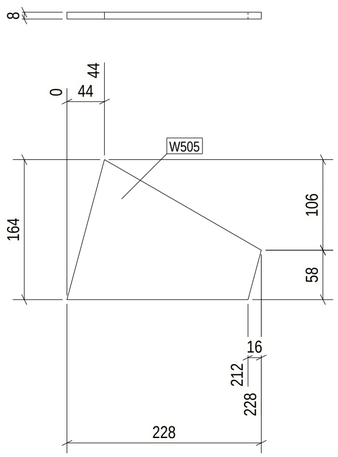

No. 8, Marked W505

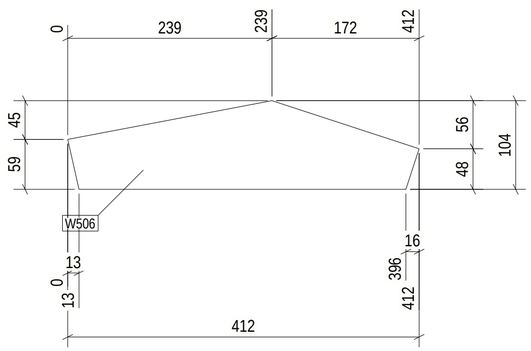

No. 1, Marked W506

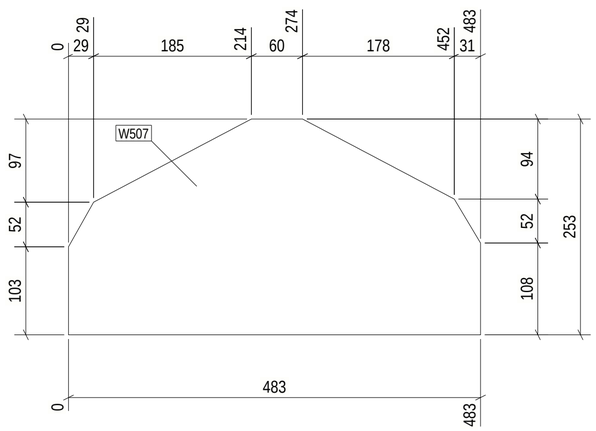

No. 4, Marked W507

8 REQ'D AS DRAWN MK'D W508
4 REQ'D AS DRAWN MK'D W507
1 REQ'D AS DRAWN MK'D W506
8 REQ'D AS DRAWN MK'D W505
4 REQ'D AS DRAWN MK'D W504
8 REQ'D AS DRAWN MK'D W503
8 REQ'D AS DRAWN MK'D W502

GENERAL NOTES:

1. THE DIMENSIONS SHOWN ARE NOMINAL (IN MILLIMETERS), U.N.O.
2. WELD SIZESHALL BE AISC MINIMUM OF 6 mm UNLESS NOTED OTHERWISE.
3. ALL FIELD WELDS SHALL BE INSPECTED PER QUALITY ASSURANCE AND SPECIAL INSPECTIONS.

REFERENCE DRAWINGS

1	93M-BOA-NAT-LOT-04833
2	93M-BOA-NAT-LOT-09170
3	93M-BOA-NAT-LOT-01976
4	
5	
6	
7	
8	
9	

6TH OF OCTOBER CITY RAIL TRANSIT MONORAIL

The Authority | Consultant: Hill International | Main Contractor: ORASCOM CONSTRUCTION / BOMBARDIER | Structural Designer: INNOVA TRANSPORTATION

KEY PLAN:

6 October Monorail Engineering Unit Valid For Construction

SCALE	SHOPDRAWING	DATE
AS SHOWN		11/20/2022

REV	DATE	DSG.	CHK.	APP.	AMENDMENTS	STATUS
A	11/20/2022	M.KH	M.KH	DR.M.M	ISSUED FOR INFORMATION	IFI

DRAWING TITLE

6TH OF OCTOBER MONORAIL SERVICE WALKWAYS ZONE (1008) W502

Project Code	Rubric	Initiator	Lot	Ref	Number	Revision
9 3 M	0 4 7 6	A C C	6 0 D E P	D W G	0 8 9 3 5	A

Tekla structures

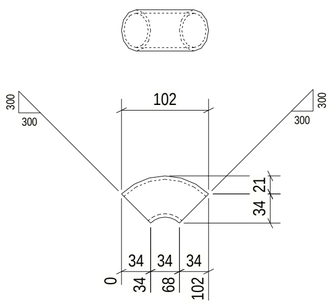

No. 16, Marked W491

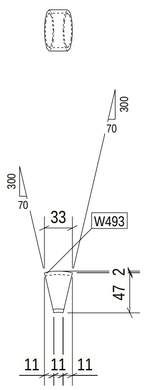

No. 12, Marked W493

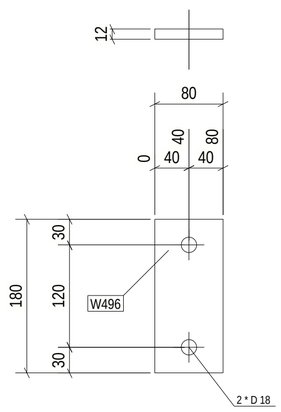

No. 21, Marked W496

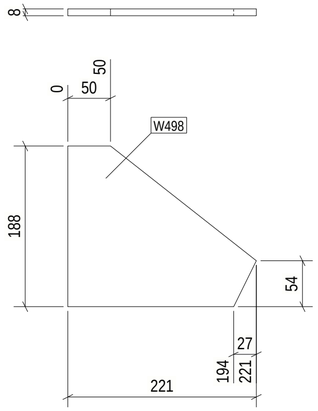

No. 1, Marked W498

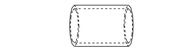

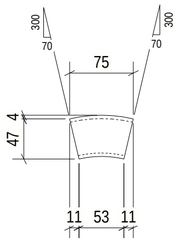

No. 62, Marked W492

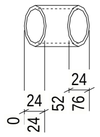

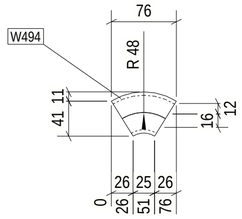

No. 4, Marked W494

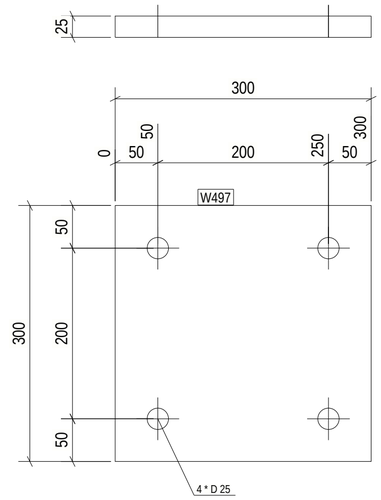

No. 27, Marked W497

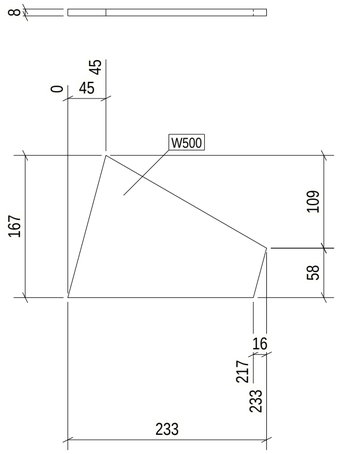

No. 4, Marked W500

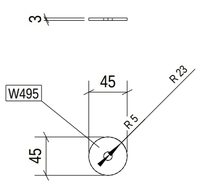

No. 20, Marked W495

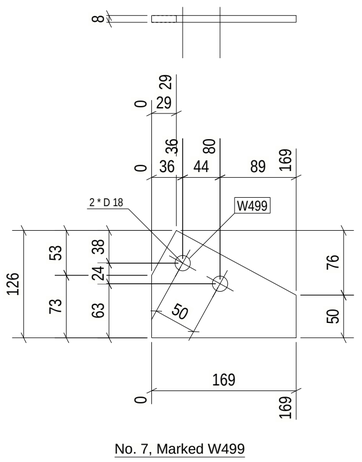

No. 7, Marked W499

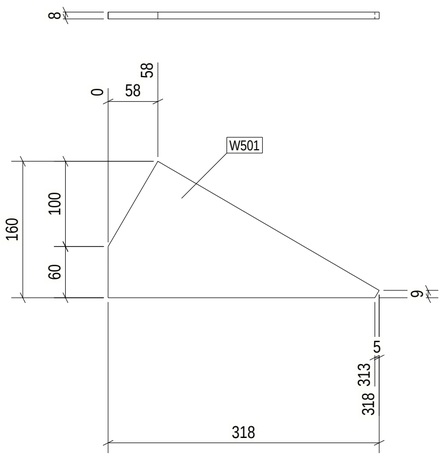

No. 1, Marked W501

Length & Area & Weight per piece						
W491	CHS48.3*4.0	S235JR	16	75.4	0.01	0.3
Length & Area & Weight per piece						
W492	CHS48.3*4.0	S235JR	62	64.2	0.01	0.3
Length & Area & Weight per piece						
W493	CHS48.3*4.0	S235JR	12	22.0	0.00	0.1
Length & Area & Weight per piece						
W494	CHS48.3*4.0	S235JR	4	53.4	0.01	0.2
Length & Area & Weight per piece						
W495	PL3*45	S355JR	20	45.0	0.00	0.0
Length & Area & Weight per piece						
W496	PL12*80	S355JR	21	180.0	0.04	1.4
Length & Area & Weight per piece						
W497	PL25*300	S355JR	27	300.0	0.21	17.7
Length & Area & Weight per piece						
W498	PL8*188.3	S355JR	1	220.9	0.06	1.8
Length & Area & Weight per piece						
W499	PL8*125.8	S355JR	7	169.4	0.03	1.0
Length & Area & Weight per piece						
W500	PL8*166.7	S355JR	4	232.9	0.05	1.5

Length & Area & Weight per piece						
W501	PL8*159.9	S355JR	1	317.7	0.06	1.8
Mark	Profile	Grade	QTY	Length	Area	Weight

approval is subject to approval of coordination package between multi-discipline

REVIEWED WITH COMMENT MONORAILS PROJECT

1 REQ'D AS DRAWN MK'D W501
4 REQ'D AS DRAWN MK'D W500
7 REQ'D AS DRAWN MK'D W499
1 REQ'D AS DRAWN MK'D W498
27 REQ'D AS DRAWN MK'D W497
21 REQ'D AS DRAWN MK'D W496
20 REQ'D AS DRAWN MK'D W495
4 REQ'D AS DRAWN MK'D W494
12 REQ'D AS DRAWN MK'D W493
62 REQ'D AS DRAWN MK'D W492
16 REQ'D AS DRAWN MK'D W491

GENERAL NOTES:

1. THE DIMENSIONS SHOWN ARE NOMINAL (IN MILLIMETERS), U.N.O.
2. WELD SIZESHALL BE AISC MINIMUM OF 6 mm UNLESS NOTED OTHERWISE.
3. ALL FIELD WELDS SHALL BE INSPECTED PER QUALITY ASSURANCE AND SPECIAL INSPECTIONS.

REFERENCE DRAWINGS

1	93M-BOA-NAT-LOT-04833
2	93M-BOA-NAT-LOT-09170
3	93M-BOA-NAT-LOT-01976
4	
5	
6	
7	
8	
9	

6TH OF OCTOBER CITY RAIL TRANSIT MONORAIL

The Authority | Hill International Consultant | Main Contractor | Structural Designer

KEY PLAN:

SCALE	SHOPDRAWING	DATE
AS SHOWN		11/20/2022

REV	DATE	DSG.	CHK.	APP.	AMENDMENTS	STATUS
A	11/20/2022	M.KH	M.KH	DR.M.M	ISSUED FOR INFORMATION	IFI

6 October Monorail Engineering Unit Valid For Construction

DRAWING TITLE

6TH OF OCTOBER MONORAIL SERVICE WALKWAYS ZONE (1008) W491

Project Code	Rubric	Initiator	Lot	Ref	Number	Revision
9 3	M 0 4 7 6	A C C	6 0 D E P	D W G	0 8 9 3 6	A

Tekla structures

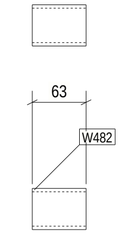

No. 1, Marked W482

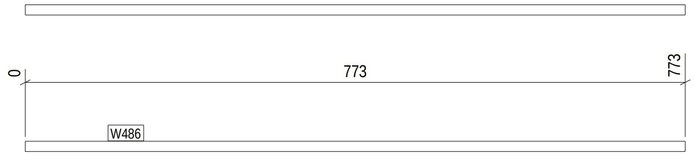

No. 3, Marked W486

approval is subject to approval of coordination package between multi-discipline

REVIEWED WITH COMMENT MONORAILS PROJECT

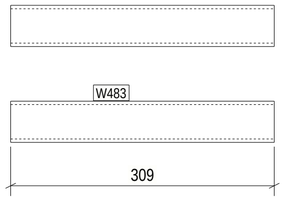

No. 3, Marked W483

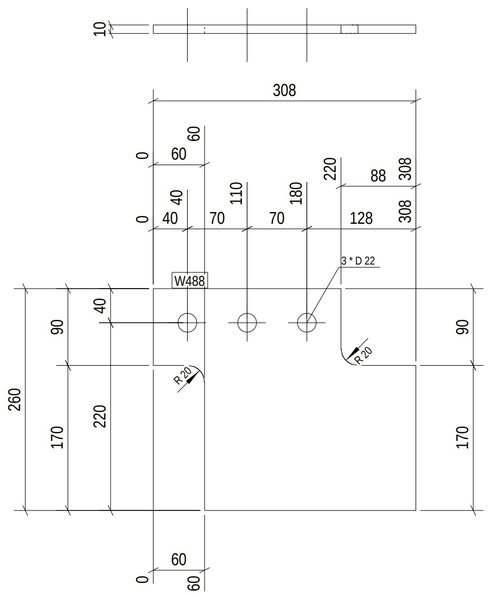

No. 3, Marked W488

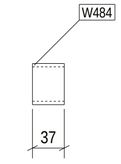

No. 1, Marked W484

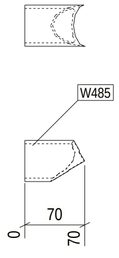

No. 1, Marked W485

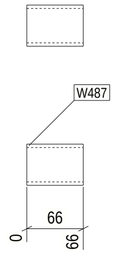

No. 1, Marked W487

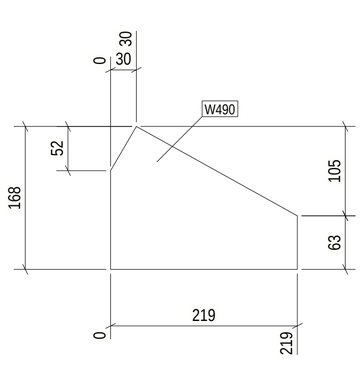

No. 1, Marked W490

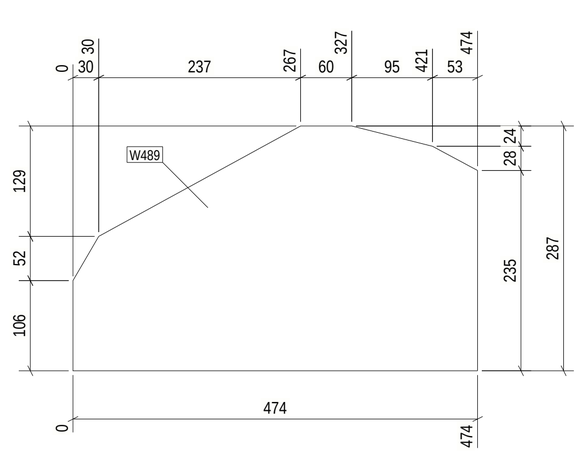

No. 4, Marked W489

Length & Area & Weight per piece						
W482	CHS48.3*4.0	S235JR	1	63.1	0.01	0.3
Length & Area & Weight per piece						
W483	CHS48.3*4.0	S235JR	3	308.9	0.05	1.4
Length & Area & Weight per piece						
W484	CHS48.3*4.0	S235JR	1	37.3	0.01	0.2
Length & Area & Weight per piece						
W485	CHS48.3*4.0	S235JR	1	70.3	0.01	0.3
Length & Area & Weight per piece						
W486	ROD12	S355JR	3	773.5	0.03	0.6
Length & Area & Weight per piece						
W487	CHS48.3*4.0	S235JR	1	66.1	0.01	0.3
Length & Area & Weight per piece						
W488	PL10*260	S355JR	3	307.8	0.14	4.9
Length & Area & Weight per piece						
W489	PL8*286.9	S355JR	4	474.2	0.24	7.1
Length & Area & Weight per piece						
W490	PL8*167.5	S355JR	1	218.8	0.06	1.6
Mark	Profile	Grade	QTY	Length	Area	Weight

1 REQ'D AS DRAWN MK'D W490
4 REQ'D AS DRAWN MK'D W489
3 REQ'D AS DRAWN MK'D W488
1 REQ'D AS DRAWN MK'D W487
3 REQ'D AS DRAWN MK'D W486
1 REQ'D AS DRAWN MK'D W485
1 REQ'D AS DRAWN MK'D W484
3 REQ'D AS DRAWN MK'D W483
1 REQ'D AS DRAWN MK'D W482

GENERAL NOTES:

1. THE DIMENSIONS SHOWN ARE NOMINAL (IN MILLIMETERS), U.N.O.
2. WELD SIZESHALL BE AISC MINIMUM OF 6 mm UNLESS NOTED OTHERWISE.
3. ALL FIELD WELDS SHALL BE INSPECTED PER QUALITY ASSURANCE AND SPECIAL INSPECTIONS.

REFERENCE DRAWINGS

1	93M-BOA-NAT-LOT-04833
2	93M-BOA-NAT-LOT-09170
3	93M-BOA-NAT-LOT-01976
4	
5	
6	
7	
8	
9	

6TH OF OCTOBER CITY RAIL TRANSIT MONORAIL

The Authority | Hill International Consultant | Main Contractor | Structural Designer

KEY PLAN:

SCALE	SHOPDRAWING	DATE
AS SHOWN		11/20/2022

6 October Monorail
Engineering Unit
Valid For Construction

DRAWING TITLE

6TH OF OCTOBER MONORAIL
SERVICE WALKWAYS
ZONE (1008)
W482

REV	DATE	DSG.	CHK.	APP.	AMENDMENTS	STATUS
A	11/20/2022	M.KH	M.KH	DR.M.M	ISSUED FOR INFORMATION	IFI

Project Code	Rubric	Initiator	Lot	Ref	Number	Revision
9 3	M 0 4 7 6	A C C	6 0 D E P	D W G	0 8 9 3 7	A

Tekla structures

Mark	Profile	Grade	QTY	Length	Area	Weight
Length & Area & Weight per piece						
W473	CHS48.3*4.0	S235JR	13	996.3	0.15	4.4
Length & Area & Weight per piece						
W474	CHS48.3*4.0	S235JR	1	86.9	0.01	0.4
Length & Area & Weight per piece						
W475	PL10*25	S355JR	33	78.4	0.01	0.1
Length & Area & Weight per piece						
W476	CHS48.3*4.0	S235JR	1	584.0	0.09	2.6
Length & Area & Weight per piece						
W477	CHS48.3*4.0	S235JR	3	996.3	0.15	4.4
Length & Area & Weight per piece						
W478	CHS48.3*4.0	S235JR	1	665.8	0.10	2.9
Length & Area & Weight per piece						
W479	CHS48.3*4.0	S235JR	7	248.9	0.04	1.1
Length & Area & Weight per piece						
W480	CHS48.3*4.0	S235JR	1	299.0	0.04	1.3
Length & Area & Weight per piece						
W481	CHS48.3*4.0	S235JR	1	118.3	0.02	0.5

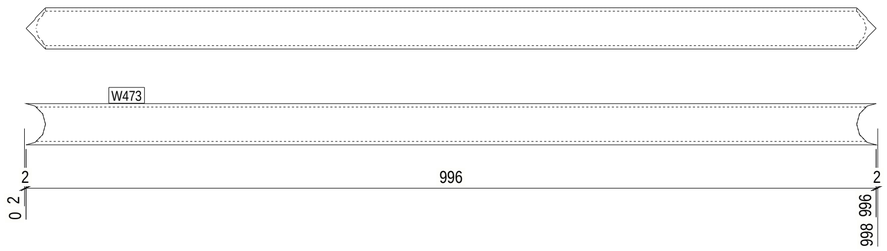

No. 13, Marked W473

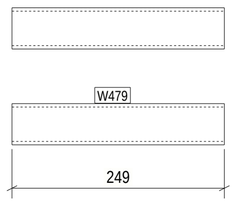

No. 7, Marked W479

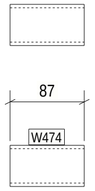

No. 1, Marked W474

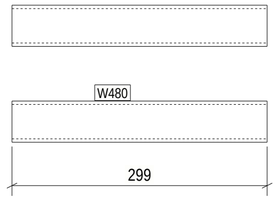

No. 1, Marked W480

approval is subject to approval of coordination package between multi-discipline

REVIEWED WITH COMMENT MONORAILS PROJECT

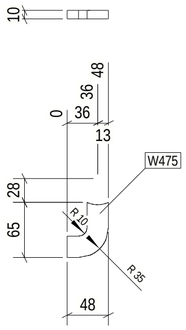

No. 33, Marked W475

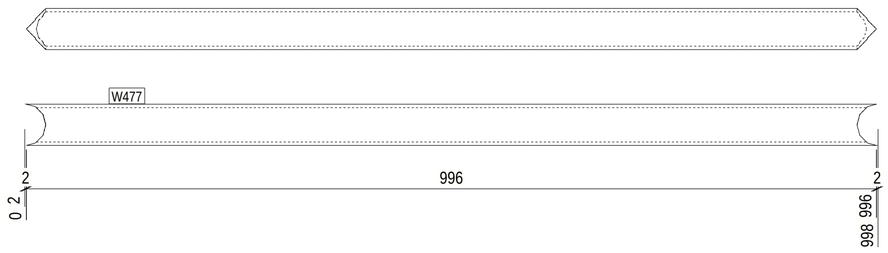

No. 3, Marked W477

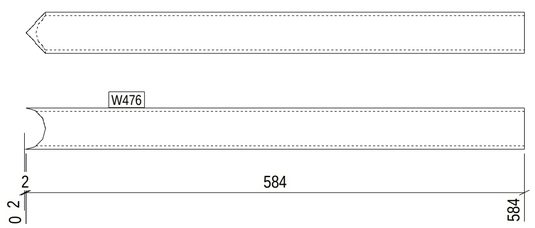

No. 1, Marked W476

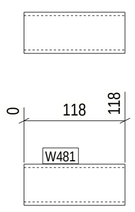

No. 1, Marked W481

No. 1, Marked W478

1 REQ'D AS DRAWN MK'D W481
1 REQ'D AS DRAWN MK'D W480
7 REQ'D AS DRAWN MK'D W479
1 REQ'D AS DRAWN MK'D W478
3 REQ'D AS DRAWN MK'D W477
1 REQ'D AS DRAWN MK'D W476
33 REQ'D AS DRAWN MK'D W475
1 REQ'D AS DRAWN MK'D W474
13 REQ'D AS DRAWN MK'D W473

6 October Monorail Engineering Unit
Valid For Construction

GENERAL NOTES:

1. THE DIMENSIONS SHOWN ARE NOMINAL (IN MILLIMETERS), U.N.O.
2. WELD SIZESHALL BE AISC MINIMUM OF 6 mm UNLESS NOTED OTHERWISE.
3. ALL FIELD WELDS SHALL BE INSPECTED PER QUALITY ASSURANCE AND SPECIAL INSPECTIONS.

REFERENCE DRAWINGS

1	93M-BOA-NAT-LOT-04833
2	93M-BOA-NAT-LOT-09170
3	93M-BOA-NAT-LOT-01976
4	
5	
6	
7	
8	
9	

6TH OF OCTOBER CITY RAIL TRANSIT MONORAIL

The Authority | Hill International Consultant | ORASCOM BOMBARDIER Main Contractor | INNOVA Structural Designer

KEY PLAN:

SCALE: AS SHOWN | SHOPDRAWING | DATE: 11/20/2022

REV	DATE	DSG.	CHK.	APP.	AMENDMENTS	STATUS
A	11/20/2022	M.KH	M.KH	DR.M.M	ISSUED FOR INFORMATION	IFI

DRAWING TITLE

6TH OF OCTOBER MONORAIL SERVICE WALKWAYS ZONE (1008)
W473

Project Code	Rubric	Initiator	Lot	Ref	Number	Revision
9 3 M	0 4 7 6	A C C	6 0 D E P	D W G	0 8 9 3 8	A

Tekla structures

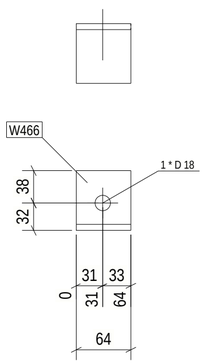

No. 2, Marked W466

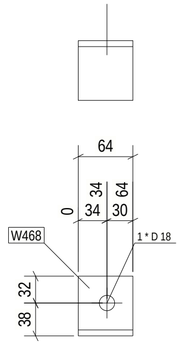

No. 1, Marked W468

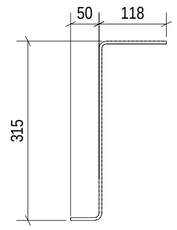

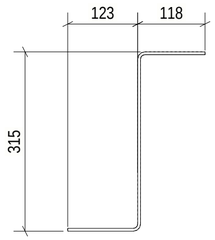

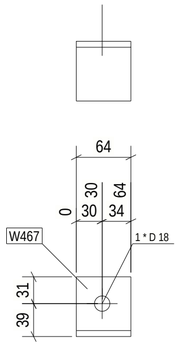

No. 2, Marked W467

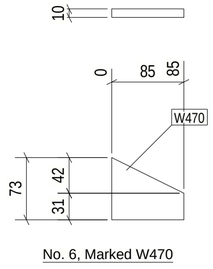

No. 6, Marked W470

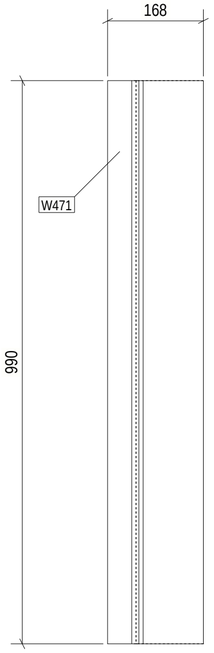

No. 36, Marked W471

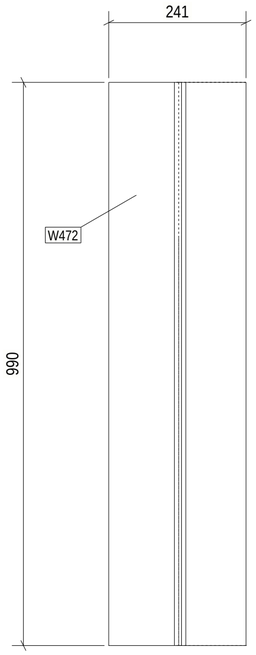

No. 2, Marked W472

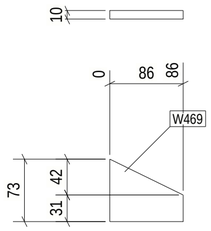

No. 2, Marked W469

Length & Area & Weight per piece						
W466	L70*7	S235JR	2	64.0	0.02	0.5
Length & Area & Weight per piece						
W467	L70*7	S235JR	2	64.0	0.02	0.5
Length & Area & Weight per piece						
W468	L70*7	S235JR	1	64.0	0.02	0.5
Length & Area & Weight per piece						
W469	PL10*73.2	S355JR	2	86.0	0.01	0.4
Length & Area & Weight per piece						
W470	PL10*72.9	S355JR	6	84.5	0.01	0.3
Length & Area & Weight per piece						
W471	CHQD_PL5*470	S235JR	36	990.0	0.94	18.2
Length & Area & Weight per piece						
W472	CHQD_PL5*543	S235JR	2	990.0	1.09	21.0
Mark	Profile	Grade	QTY	Length	Area	Weight

approval is subject to approval of coordination package between multi-discipline

REVIEWED WITH COMMENT
MONORAILS PROJECT

2 REQ'D AS DRAWN MK'D W472
36 REQ'D AS DRAWN MK'D W471
6 REQ'D AS DRAWN MK'D W470
2 REQ'D AS DRAWN MK'D W469
1 REQ'D AS DRAWN MK'D W468
2 REQ'D AS DRAWN MK'D W467
2 REQ'D AS DRAWN MK'D W466

6 October Monorail
Engineering Unit
Valid For Construction

GENERAL NOTES:

1. THE DIMENSIONS SHOWN ARE NOMINAL (IN MILLIMETERS), U.N.O.
2. WELD SIZESHALL BE AISC MINIMUM OF 6 mm UNLESS NOTED OTHERWISE.
3. ALL FIELD WELDS SHALL BE INSPECTED PER QUALITY ASSURANCE AND SPECIAL INSPECTIONS.

REFERENCE DRAWINGS

1	93M-BOA-NAT-LOT-04833
2	93M-BOA-NAT-LOT-09170
3	93M-BOA-NAT-LOT-01976
4	
5	
6	
7	
8	
9	

6TH OF OCTOBER CITY RAIL TRANSIT MONORAIL

The Authority — Hill International (Consultant) — Main Contractor — Structural Designer

KEY PLAN:

SCALE	SHOPDRAWING	DATE
AS SHOWN		12/10/2022

DRAWING TITLE
6TH OF OCTOBER MONORAIL
SERVICE WALKWAYS
ZONE (1008)
W466

REV	DATE	DSG.	CHK.	APP.	AMENDMENTS	STATUS
A	11/20/2022	M.KH	M.KH	DR.M.M	ISSUED FOR INFORMATION	IFI

Project Code	Rubric	Initiator	Lot	Ref	Number	Revision
93M	0476	ACC	60DEP	DWG	08939	A

Tekla structures

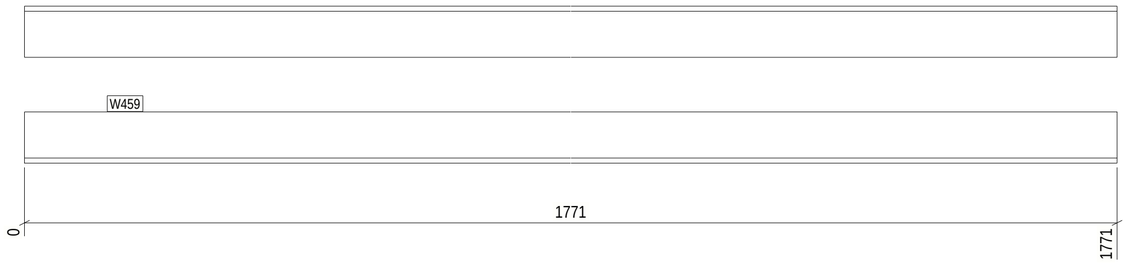

No. 2, Marked W459

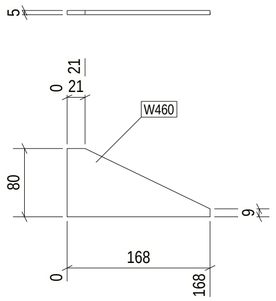

No. 12, Marked W460

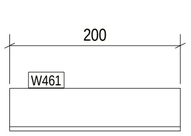

No. 156, Marked W461

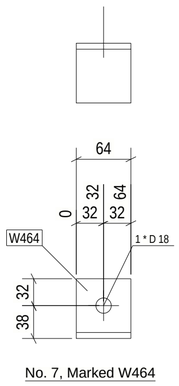

No. 7, Marked W464

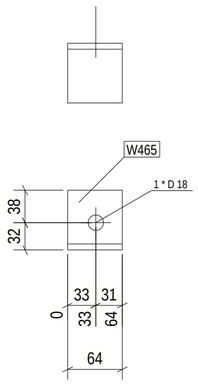

No. 2, Marked W465

approval is subject to approval of coordination package between multi-discipline

REVIEWED WITH COMMENT MONORAILS PROJECT

Length & Area & Weight per piece						
W459	L60*6	S235JR	2	1771.3	0.43	9.5
Length & Area & Weight per piece						
W460	PL5*80	S355JR	12	167.5	0.02	0.3
Length & Area & Weight per piece						
W461	L50*5	S235JR	156	200.0	0.04	0.7
Length & Area & Weight per piece						
W462	L60*6	S235JR	2	935.0	0.23	5.0
Length & Area & Weight per piece						
W463	L60*6	S235JR	2	1759.3	0.42	9.4
Length & Area & Weight per piece						
W464	L70*7	S235JR	7	64.0	0.02	0.5
Length & Area & Weight per piece						
W465	L70*7	S235JR	2	64.0	0.02	0.5
Mark	Profile	Grade	QTY	Length	Area	Weight

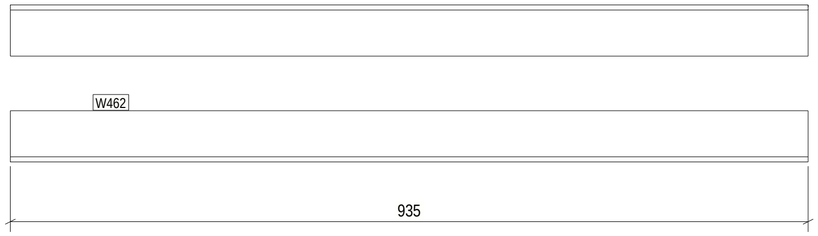

No. 2, Marked W462

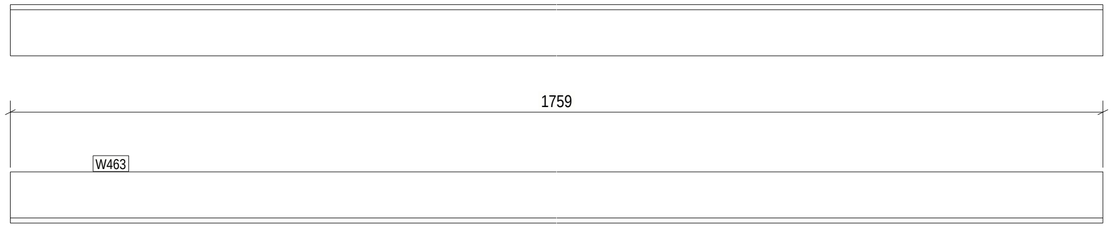

No. 2, Marked W463

2 REQ'D AS DRAWN MK'D W465
7 REQ'D AS DRAWN MK'D W464
2 REQ'D AS DRAWN MK'D W463
2 REQ'D AS DRAWN MK'D W462
156 REQ'D AS DRAWN MK'D W461
12 REQ'D AS DRAWN MK'D W460
2 REQ'D AS DRAWN MK'D W459

6 October Monorail
Engineering Unit
Valid For Construction

GENERAL NOTES:

1. THE DIMENSIONS SHOWN ARE NOMINAL (IN MILLIMETERS), U.N.O.
2. WELD SIZESHALL BE AISC MINIMUM OF 6 mm UNLESS NOTED OTHERWISE.
3. ALL FIELD WELDS SHALL BE INSPECTED PER QUALITY ASSURANCE AND SPECIAL INSPECTIONS.

REFERENCE DRAWINGS

1	93M-BOA-NAT-LOT-04833
2	93M-BOA-NAT-LOT-09170
3	93M-BOA-NAT-LOT-01976
4	
5	
6	
7	
8	
9	

6TH OF OCTOBER CITY RAIL TRANSIT MONORAIL

The Authority — Hill International (Consultant) — Main Contractor — Structural Designer

KEY PLAN:

REV	DATE	DSG.	CHK.	APP.	AMENDMENTS	STATUS
A	11/20/2022	M.KH	M.KH	DR.M.M	ISSUED FOR INFORMATION	IFI

SCALE	SHOPDRAWING	DATE
AS SHOWN		12/20/2022

DRAWING TITLE

6TH OF OCTOBER MONORAIL
SERVICE WALKWAYS
ZONE (1008)
W459

Project Code	Rubric	Initiator	Lot	Ref	Number	Revision
93	M047	ACC60	DEP	DWG	08940	A

Tekla structures

approval is subject to approval of coordination package between multi-discipline

REVIEWED WITH COMMENT
MONORAILS PROJECT

Length & Area & Weight per piece						
W454	L70*7	S235JR	1	984.9	0.28	7.2
Length & Area & Weight per piece						
W455	L60*6	S235JR	2	1823.7	0.44	9.8
Length & Area & Weight per piece						
W456	L70*7	S235JR	1	985.9	0.28	7.2
Length & Area & Weight per piece						
W457	L60*6	S235JR	3	956.8	0.23	5.1
Length & Area & Weight per piece						
W458	L60*6	S235JR	5	964.2	0.23	5.2
Mark	Profile	Grade	QTY	Length	Area	Weight

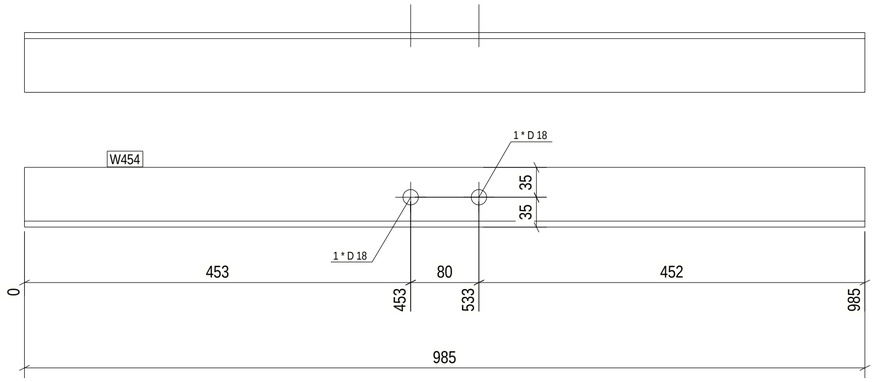

No. 1, Marked W454

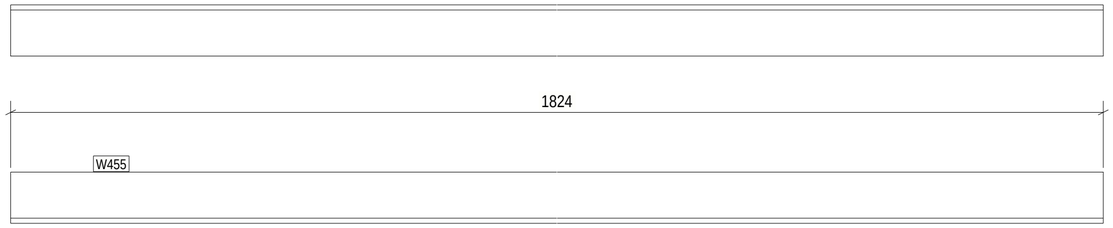

No. 2, Marked W455

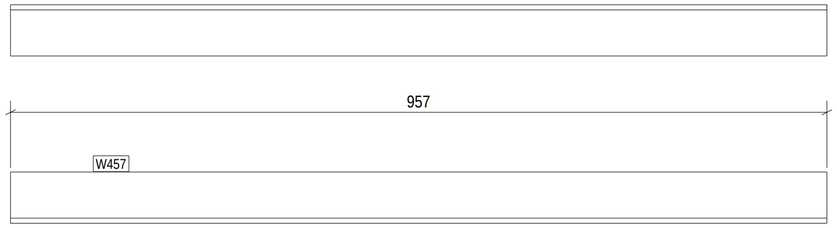

No. 3, Marked W457

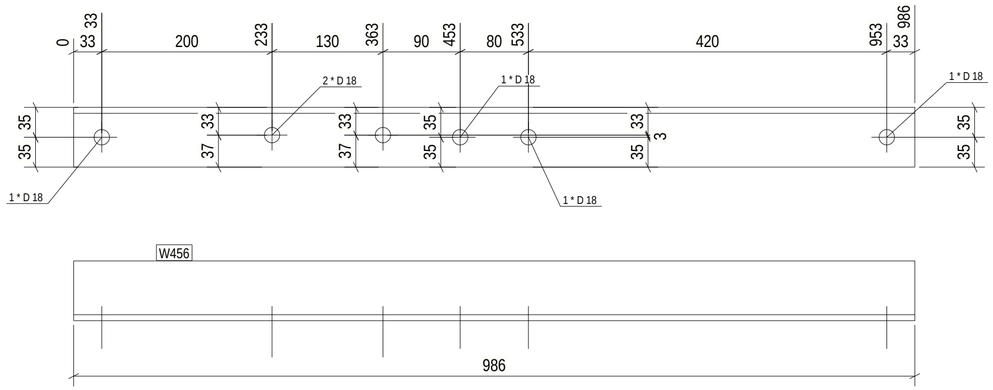

No. 1, Marked W456

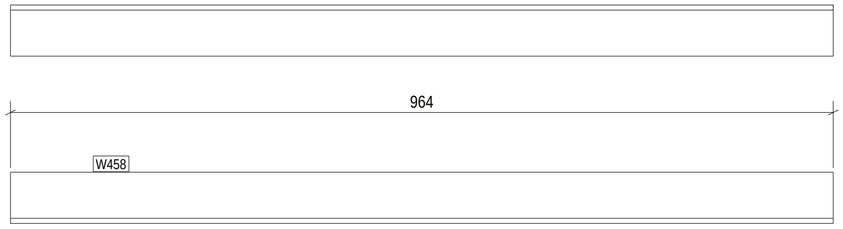

No. 5, Marked W458

5 REQ'D AS DRAWN MK'D W458
3 REQ'D AS DRAWN MK'D W457
1 REQ'D AS DRAWN MK'D W456
2 REQ'D AS DRAWN MK'D W455
1 REQ'D AS DRAWN MK'D W454

6 October Monorail
Engineering Unit
Valid For Construction

GENERAL NOTES:

1. THE DIMENSIONS SHOWN ARE NOMINAL (IN MILLIMETERS), U.N.O.
2. WELD SIZESHALL BE AISC MINIMUM OF 6 mm UNLESS NOTED OTHERWISE.
3. ALL FIELD WELDS SHALL BE INSPECTED PER QUALITY ASSURANCE AND SPECIAL INSPECTIONS.

REFERENCE DRAWINGS

1	93M-BOA-NAT-LOT-04833
2	93M-BOA-NAT-LOT-09170
3	93M-BOA-NAT-LOT-01976
4	
5	
6	
7	
8	
9	

6TH OF OCTOBER CITY RAIL TRANSIT MONORAIL

The Authority — Hill International Consultant — Main Contractor — Structural Designer

KEY PLAN:

SCALE	SHOPDRAWING	DATE
AS SHOWN		11/20/2022

DRAWING TITLE
6TH OF OCTOBER MONORAIL
SERVICE WALKWAYS
ZONE (1008)
W454

REV.	DATE	DSG.	CHK.	APP.	AMENDMENTS	STATUS
A	11/20/2022	M.KH	M.KH	DR.M.M	ISSUED FOR INFORMATION	IFI

Project Code	Rubric	Initiator	Lot	Ref	Number	Revision
9 3 M	0 4 7 6	A C C	6 0 D E P	D W G	0 8 9 4 1	A

Tekla structures

approval is subject to approval of coordination package between multi-discipline

REVIEWED WITH COMMENT
MONORAILS PROJECT

Length & Area & Weight per piece						
W449	L70*7	S235JR	2	985.0	0.28	7.2
Length & Area & Weight per piece						
W450	L70*7	S235JR	2	965.5	0.27	7.1
Length & Area & Weight per piece						
W451	L60*6	S235JR	5	898.2	0.22	4.8
Length & Area & Weight per piece						
W452	L60*6	S235JR	8	1795.8	0.43	9.6
Length & Area & Weight per piece						
W453	L70*7	S235JR	1	1160.0	0.33	8.5
Mark	Profile	Grade	QTY	Length	Area	Weight

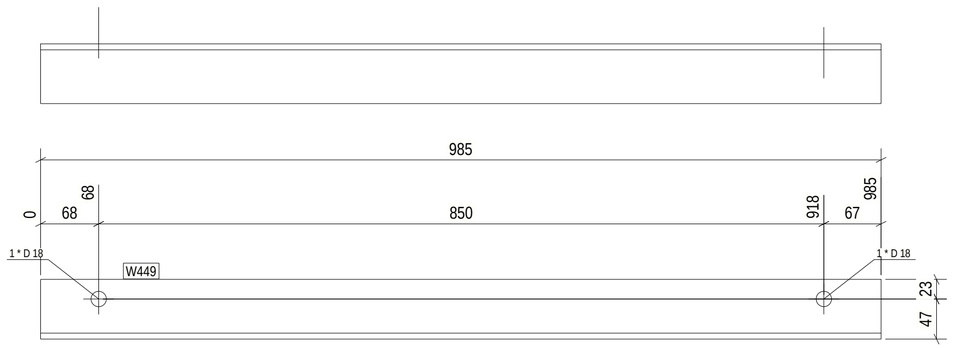

No. 2, Marked W449

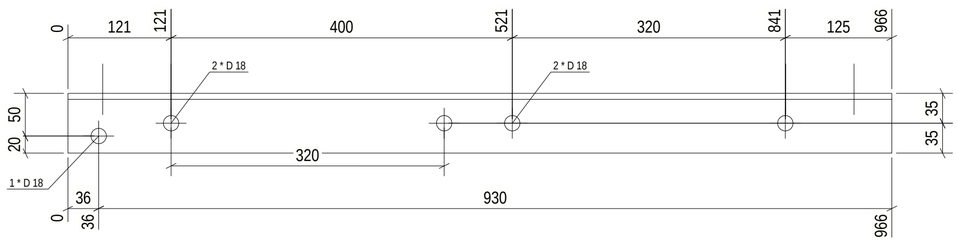

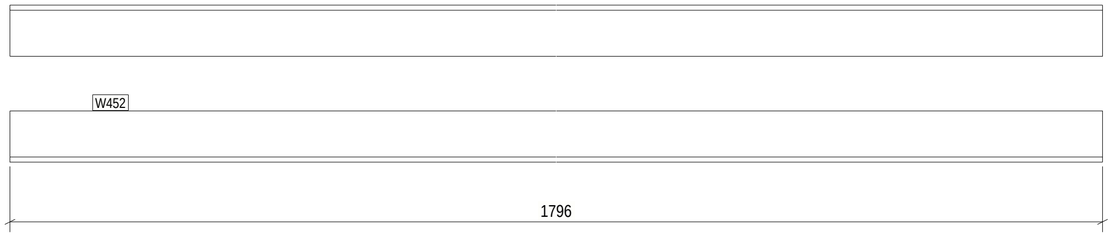

No. 8, Marked W452

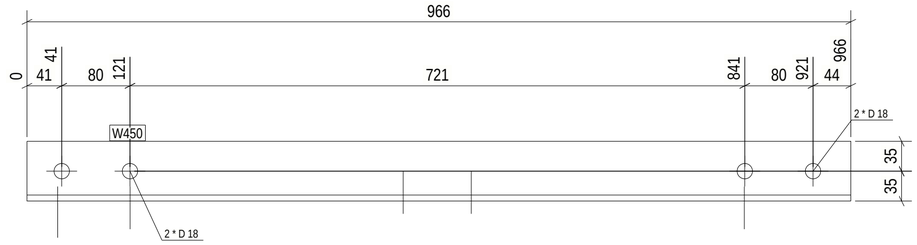

No. 2, Marked W450

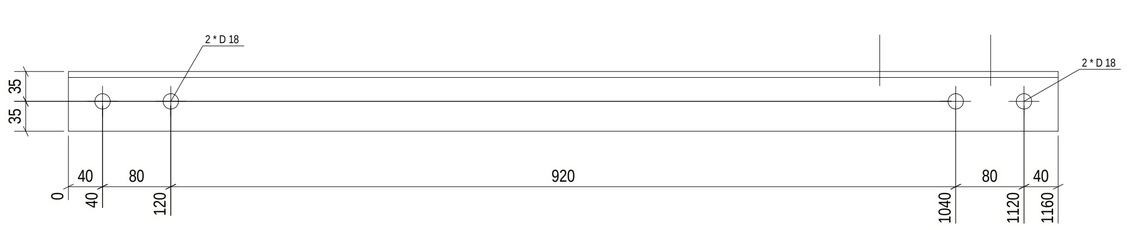

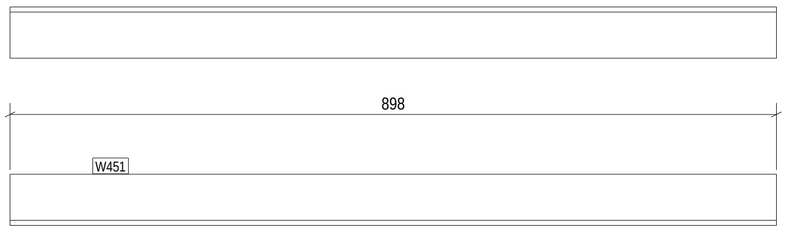

No. 5, Marked W451

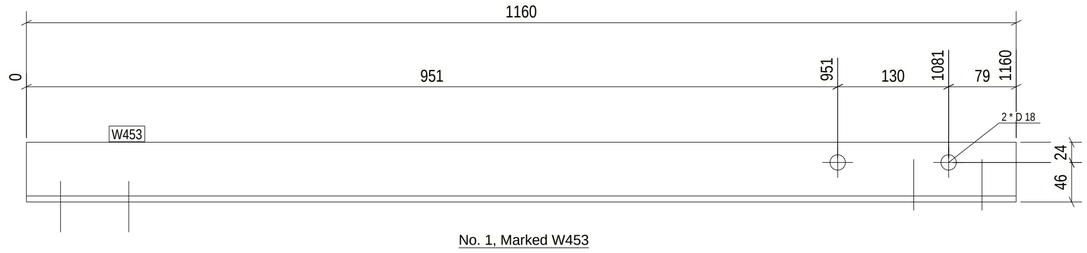

No. 1, Marked W453

1 REQ'D AS DRAWN MK'D W453
8 REQ'D AS DRAWN MK'D W452
5 REQ'D AS DRAWN MK'D W451
2 REQ'D AS DRAWN MK'D W450
2 REQ'D AS DRAWN MK'D W449

6 October Monorail
Engineering Unit
Valid For Construction

GENERAL NOTES:

1. THE DIMENSIONS SHOWN ARE NOMINAL (IN MILLIMETERS), U.N.O.
2. WELD SIZESHALL BE AISC MINIMUM OF 6 mm UNLESS NOTED OTHERWISE.
3. ALL FIELD WELDS SHALL BE INSPECTED PER QUALITY ASSURANCE AND SPECIAL INSPECTIONS.

REFERENCE DRAWINGS

1	93M-BOA-NAT-LOT-04833
2	93M-BOA-NAT-LOT-09170
3	93M-BOA-NAT-LOT-01976
4	
5	
6	
7	
8	
9	

6TH OF OCTOBER CITY RAIL TRANSIT MONORAIL

The Authority — Hill International Consultant — Main Contractor — Structural Designer

KEY PLAN:

SCALE	SHOPDRAWING	DATE
AS SHOWN		17/10/2022

DRAWING TITLE
6TH OF OCTOBER MONORAIL
SERVICE WALKWAYS
ZONE (1008)
W449

REV	DATE	DSG.	CHK.	APP.	AMENDMENTS	STATUS
A	11/20/2022	M.KH	M.KH	DR.M.M	ISSUED FOR INFORMATION	IFI

Project Code	Rubric	Initiator	Lot	Ref	Number	Revision
9 3 M	0 4 7 6	A C C	6 0 D E P	D W G	0 8 9 4 2	A

Tekla structures

Length & Area & Weight per piece						
W445	L60*6	S235JR	4	1810.8	0.44	9.7
Length & Area & Weight per piece						
W446	UPN140	S235JR	1	1000.1	0.49	16.0
Length & Area & Weight per piece						
W447	L70*7	S235JR	2	965.5	0.27	7.1
Length & Area & Weight per piece						
W448	UPN140	S235JR	2	1000.1	0.49	16.0
Mark	Profile	Grade	QTY	Length	Area	Weight

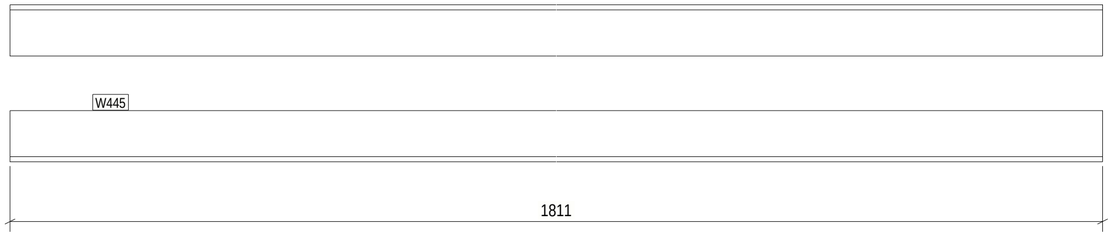

No. 4, Marked W445

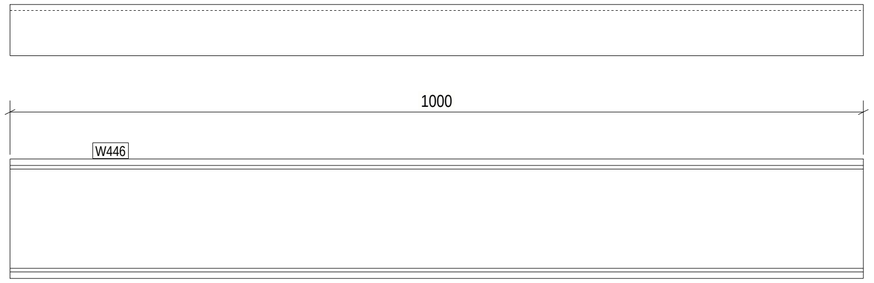

No. 1, Marked W446

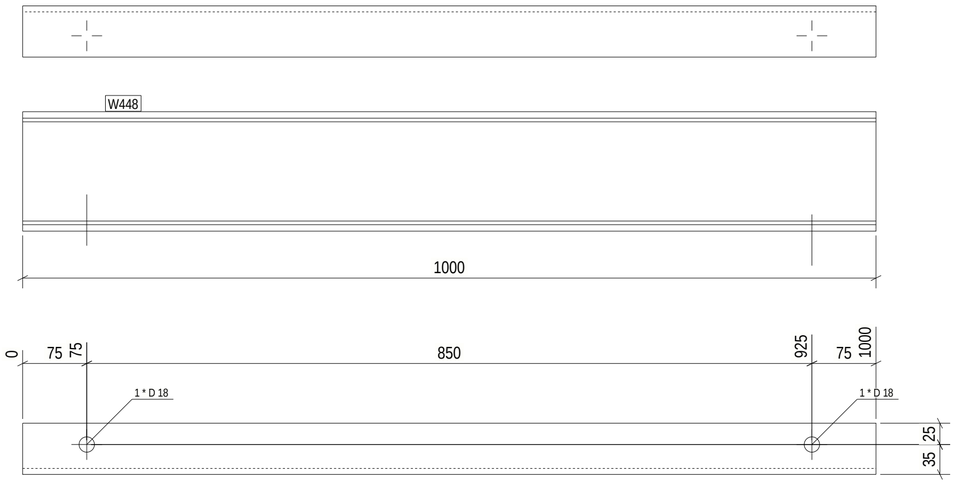

No. 2, Marked W448

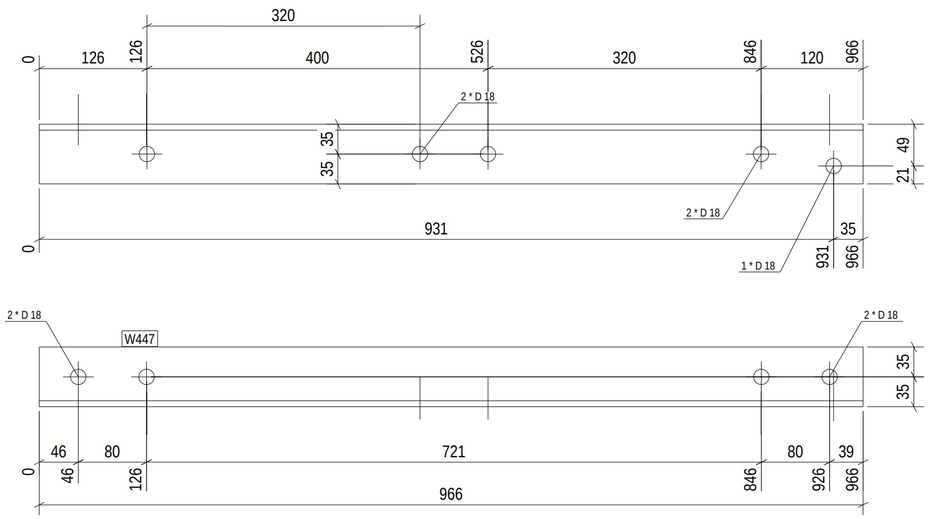

No. 2, Marked W447

approval is subject to approval of coordination package between multi-discipline

REVIEWED WITH COMMENT MONORAILS PROJECT

2 REQ'D AS DRAWN MK'D W448
2 REQ'D AS DRAWN MK'D W447
1 REQ'D AS DRAWN MK'D W446
4 REQ'D AS DRAWN MK'D W445

6 October Monorail
Engineering Unit
Valid For Construction

GENERAL NOTES:

1. THE DIMENSIONS SHOWN ARE NOMINAL (IN MILLIMETERS), U.N.O.
2. WELD SIZESHALL BE AISC MINIMUM OF 6 mm UNLESS NOTED OTHERWISE.
3. ALL FIELD WELDS SHALL BE INSPECTED PER QUALITY ASSURANCE AND SPECIAL INSPECTIONS.

REFERENCE DRAWINGS

1	93M-BOA-NAT-LOT-04833
2	93M-BOA-NAT-LOT-09170
3	93M-BOA-NAT-LOT-01976
4	
5	
6	
7	
8	
9	

6TH OF OCTOBER CITY RAIL TRANSIT MONORAIL

The Authority | Consultant: Hill International | Main Contractor | Structural Designer

KEY PLAN:

REV	DATE	DSG.	CHK.	APP.	AMENDMENTS	STATUS
A	11/20/2022	M.KH	M.KH	DR.M.M	ISSUED FOR INFORMATION	IFI

SCALE	SHOPDRAWING	DATE
AS SHOWN		11/20/2022

DRAWING TITLE

6TH OF OCTOBER MONORAIL
SERVICE WALKWAYS
ZONE (1008)
W445

Project Code	Rubric	Initiator	Lot	Ref	Number	Revision
9 3 M	0 4 7 6	A C C	6 0 D E P	D W G	0 8 9 4 3	A

Tekla structures

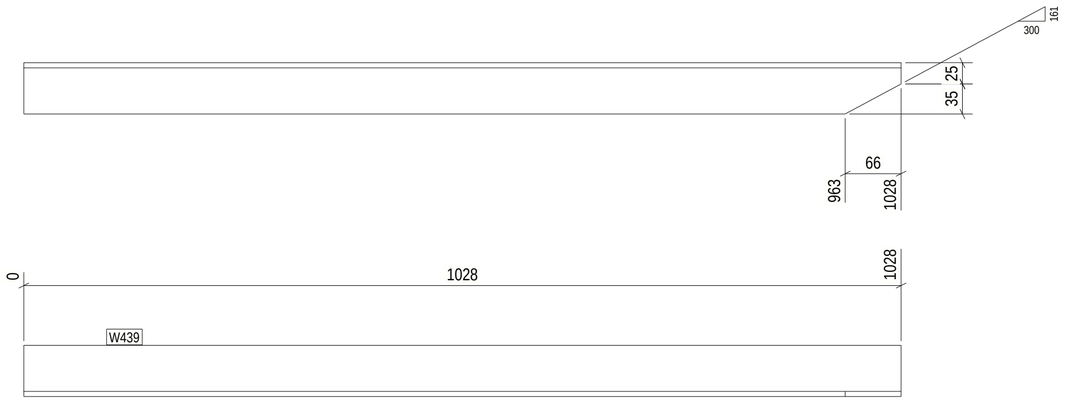

No. 8, Marked W439

approval is subject to approval of coordination package between multi-discipline

REVIEWED WITH COMMENT
MONORAILS PROJECT

Length & Area & Weight per piece						
W439	L60*6	S235JR	8	1028.2	0.25	5.5
Length & Area & Weight per piece						
W440	L60*6	S235JR	3	1843.5	0.44	9.9
Length & Area & Weight per piece						
W441	L60*6	S235JR	4	1004.4	0.24	5.3
Length & Area & Weight per piece						
W442	L60*6	S235JR	4	878.9	0.21	4.7
Length & Area & Weight per piece						
W443	L60*6	S235JR	4	1911.2	0.46	10.3
Length & Area & Weight per piece						
W444	L60*6	S235JR	4	942.1	0.23	5.1
Mark	Profile	Grade	QTY	Length	Area	Weight

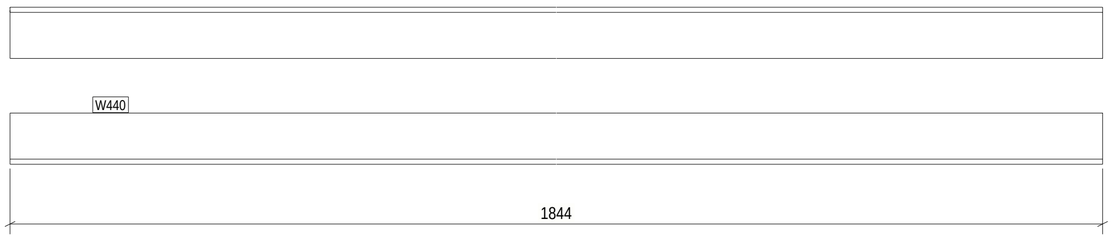

No. 3, Marked W440

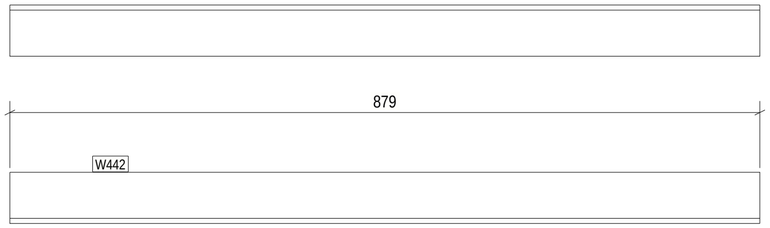

No. 4, Marked W442

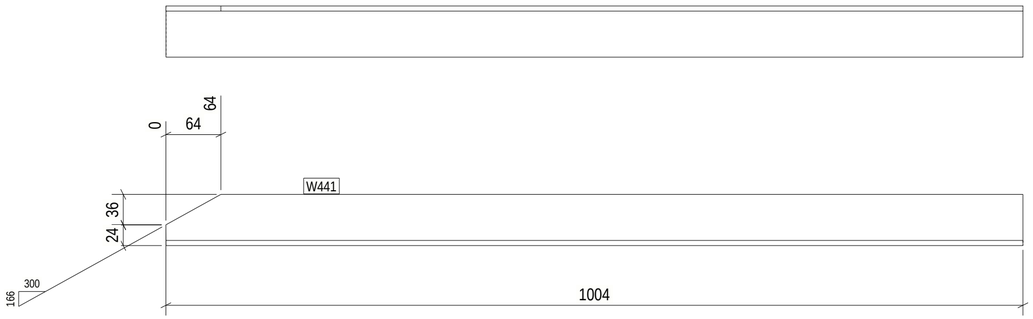

No. 4, Marked W441

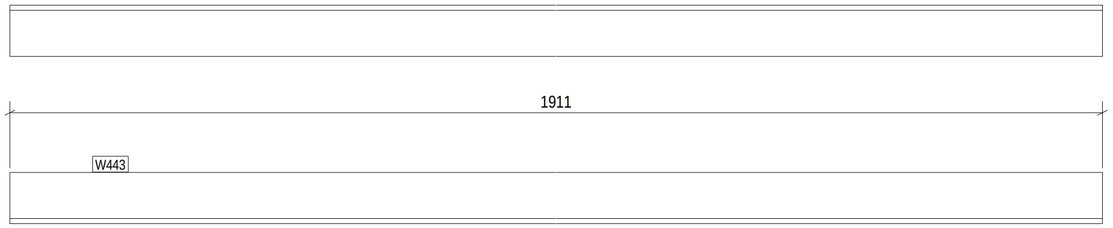

No. 4, Marked W443

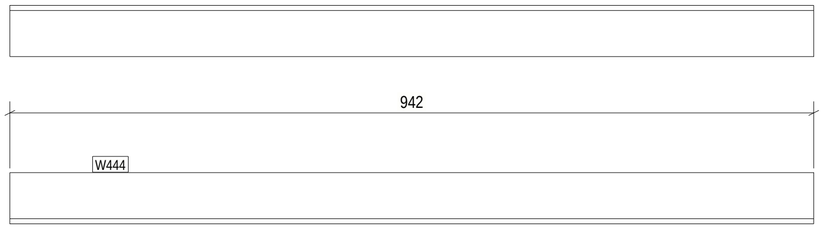

No. 4, Marked W444

4 REQ'D AS DRAWN MK'D W444
4 REQ'D AS DRAWN MK'D W443
4 REQ'D AS DRAWN MK'D W442
4 REQ'D AS DRAWN MK'D W441
3 REQ'D AS DRAWN MK'D W440
8 REQ'D AS DRAWN MK'D W439

6 October Monorail
Engineering Unit
Valid For Construction

GENERAL NOTES:

1. THE DIMENSIONS SHOWN ARE NOMINAL (IN MILLIMETERS), U.N.O.
2. WELD SIZESHALL BE AISC MINIMUM OF 6 mm UNLESS NOTED OTHERWISE.
3. ALL FIELD WELDS SHALL BE INSPECTED PER QUALITY ASSURANCE AND SPECIAL INSPECTIONS.

REFERENCE DRAWINGS

1	93M-BOA-NAT-LOT-04833
2	93M-BOA-NAT-LOT-09170
3	93M-BOA-NAT-LOT-01976
4	
5	
6	
7	
8	
9	

6TH OF OCTOBER CITY RAIL TRANSIT MONORAIL

The Authority | Hill International Consultant | Main Contractor | Structural Designer

KEY PLAN:

SCALE	SHOPDRAWING	DATE
AS SHOWN		11/20/2022

DRAWING TITLE

6TH OF OCTOBER MONORAIL
SERVICE WALKWAYS
ZONE (1008)
W439

REV	DATE	DSG.	CHK.	APP.	AMENDMENTS	STATUS
A	11/20/2022	M.KH	M.KH	DR.M.M	ISSUED FOR INFORMATION	IFI

Project Code	Rubric	Initiator	Lot	Ref	Number	Revision
93MBOA	NAT	ACC	60DEP	DWG	08944	A

Tekla structures

approval is subject to approval of coordination package between multi-discipline

REVIEWED WITH COMMENT
MONORAILS PROJECT

Length & Area & Weight per piece						
W435	UPN140	S235JR	5	1000.1	0.49	16.0
Length & Area & Weight per piece						
W436	CHQD_PL5*269.8	S235JR	4	990.0	0.55	10.4
Length & Area & Weight per piece						
W437	L70*7	S235JR	1	985.9	0.28	7.2
Length & Area & Weight per piece						
W438	L60*6	S235JR	3	903.1	0.22	4.8
Mark	Profile	Grade	QTY	Length	Area	Weight

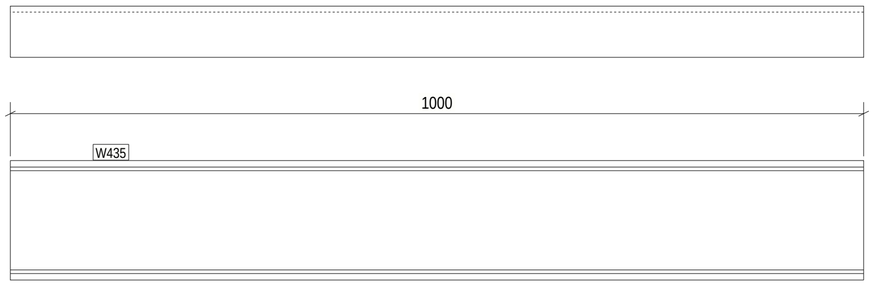

No. 5, Marked W435

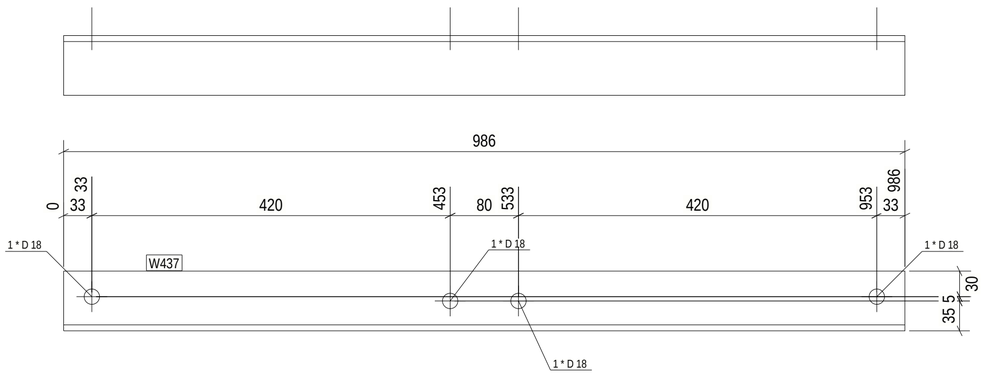

No. 1, Marked W437

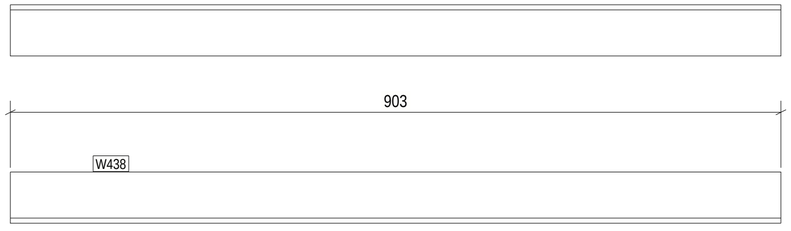

No. 3, Marked W438

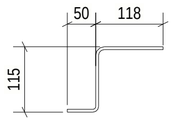

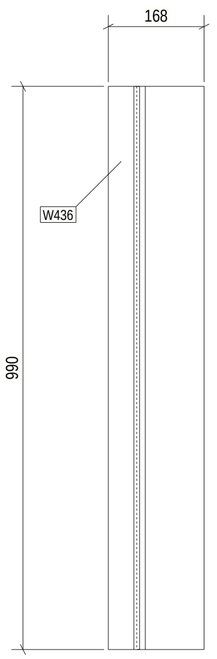

No. 4, Marked W436

3 REQ'D AS DRAWN MK'D W438
1 REQ'D AS DRAWN MK'D W437
4 REQ'D AS DRAWN MK'D W436
5 REQ'D AS DRAWN MK'D W435

6 October Monorail
Engineering Unit
Valid For Construction

GENERAL NOTES:

1. THE DIMENSIONS SHOWN ARE NOMINAL (IN MILLIMETERS), U.N.O.
2. WELD SIZESHALL BE AISC MINIMUM OF 6 mm UNLESS NOTED OTHERWISE.
3. ALL FIELD WELDS SHALL BE INSPECTED PER QUALITY ASSURANCE AND SPECIAL INSPECTIONS.

REFERENCE DRAWINGS

1	93M-BOA-NAT-LOT-04833
2	93M-BOA-NAT-LOT-09170
3	93M-BOA-NAT-LOT-01976
4	
5	
6	
7	
8	
9	

6TH OF OCTOBER CITY RAIL TRANSIT MONORAIL

The Authority | Consultant: Hill International | Main Contractor | Structural Designer

KEY PLAN:

SCALE	SHOPDRAWING	DATE
AS SHOWN		11/20/2022

REV	DATE	DSG.	CHK.	APP.	AMENDMENTS	STATUS
A	11/20/2022	M.KH	M.KH	DR.M.M	ISSUED FOR INFORMATION	IFI

DRAWING TITLE

6TH OF OCTOBER MONORAIL
SERVICE WALKWAYS
ZONE (1008)
W435

Project Code	Rubric	Initiator	Lot	Ref	Number	Revision
93	M047	ACC	60	DEP	DWG	08945	A

Tekla structures

Mark	Profile	Grade	QTY	Length	Area	Weight
Length & Area & Weight per piece						
W431	L60*6	S235JR	1	1077.6	0.26	5.7
Length & Area & Weight per piece						
W432	L60*6	S235JR	1	1845.1	0.44	9.9
Length & Area & Weight per piece						
W433	L70*7	S235JR	4	985.9	0.28	7.2
Length & Area & Weight per piece						
W434	UPN140	S235JR	1	1000.1	0.49	16.0

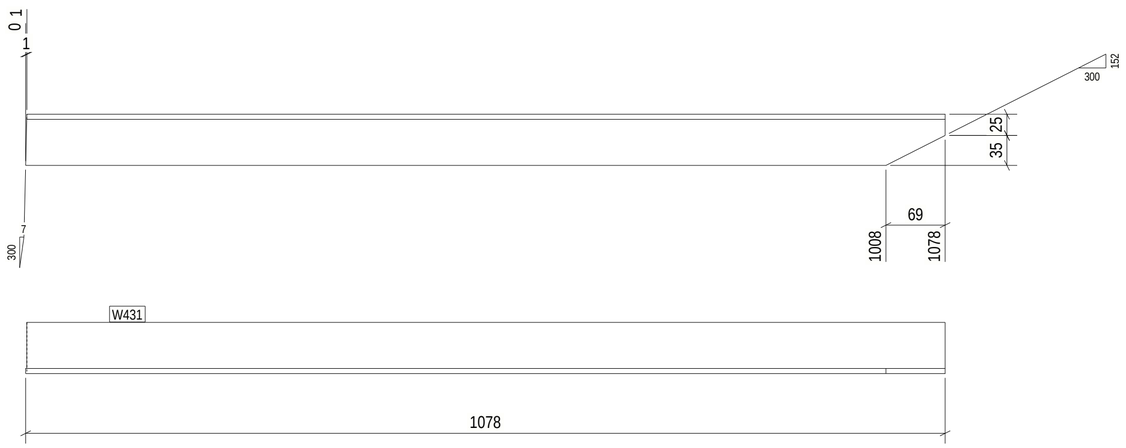

No. 1, Marked W431

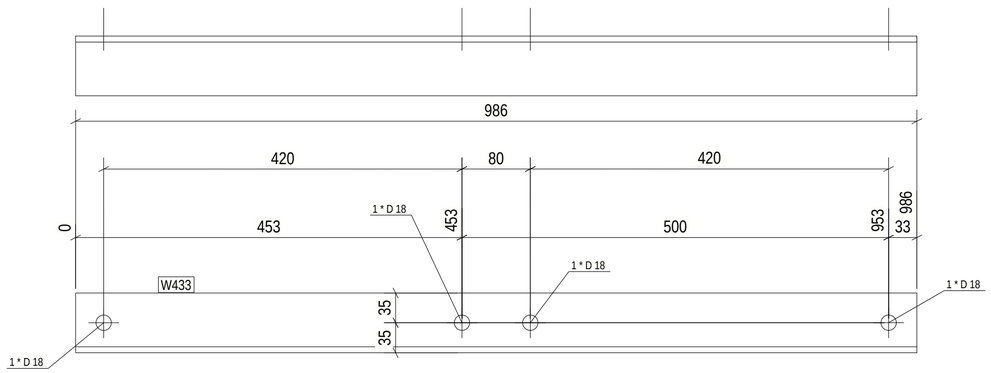

No. 4, Marked W433

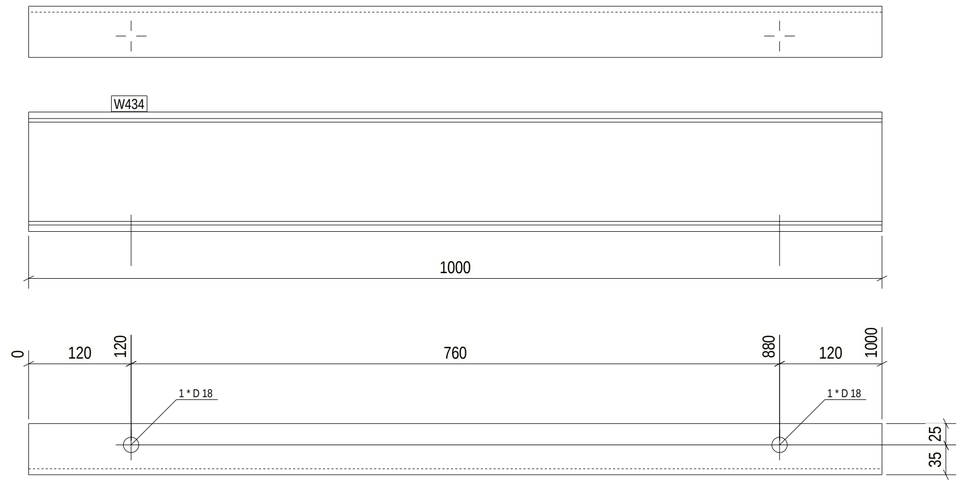

No. 1, Marked W434

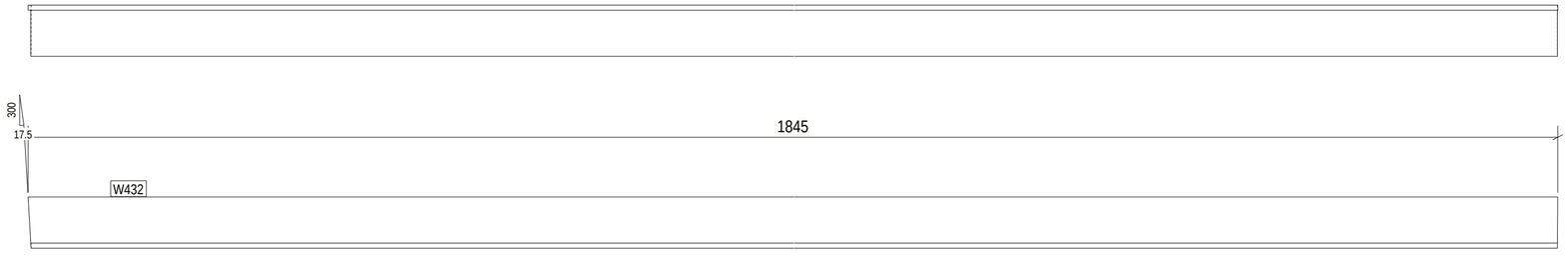

No. 1, Marked W432

approval is subject to approval of coordination package between multi-discipline

REVIEWED WITH COMMENT MONORAILS PROJECT

1 REQ'D AS DRAWN MK'D W434
4 REQ'D AS DRAWN MK'D W433
1 REQ'D AS DRAWN MK'D W432
1 REQ'D AS DRAWN MK'D W431

6 October Monorail Engineering Unit Valid For Construction

GENERAL NOTES:

1. THE DIMENSIONS SHOWN ARE NOMINAL (IN MILLIMETERS), U.N.O.
2. WELD SIZESHALL BE AISC MINIMUM OF 6 mm UNLESS NOTED OTHERWISE.
3. ALL FIELD WELDS SHALL BE INSPECTED PER QUALITY ASSURANCE AND SPECIAL INSPECTIONS.

REFERENCE DRAWINGS

1	93M-BOA-NAT-LOT-04833
2	93M-BOA-NAT-LOT-09170
3	93M-BOA-NAT-LOT-01976
4	
5	
6	
7	
8	
9	

6TH OF OCTOBER CITY RAIL TRANSIT MONORAIL

The Authority | Hill International Consultant | ORASCOM BOMBARDIER Main Contractor | INNOVA Structural Designer

KEY PLAN:

SCALE	SHOPDRAWING	DATE
AS SHOWN		11/20/2022

REV	DATE	DSG.	CHK.	APP.	AMENDMENTS	STATUS
A	11/20/2022	M.KH	M.KH	DR.M.M	ISSUED FOR INFORMATION	IFI

DRAWING TITLE

6TH OF OCTOBER MONORAIL SERVICE WALKWAYS ZONE (1008) W431

Project Code	Rubric	Initiator	Lot	Ref	Number	Revision
93M	0476	ACC	60DEP	DWG	08946	A

Tekla structures

Length & Area & Weight per piece						
W428	CHQD_PL5*449.5	S235JR	2	990.0	0.90	17.4
Length & Area & Weight per piece						
W429	L70*7	S235JR	1	1160.0	0.33	8.5
Length & Area & Weight per piece						
W430	L60*6	S235JR	1	973.0	0.23	5.2
Mark	Profile	Grade	QTY	Length	Area	Weight

approval is subject to approval of coordination package between multi-discipline

REVIEWED WITH COMMENT MONORAILS PROJECT

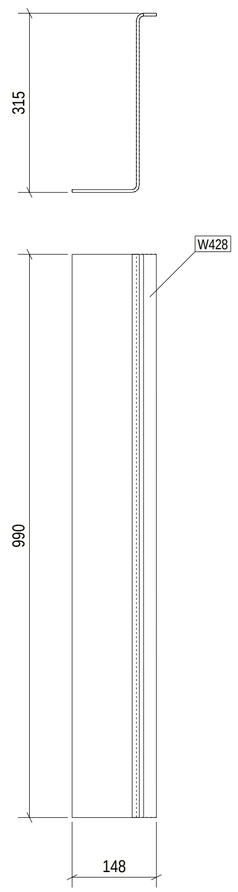

No. 2, Marked W428

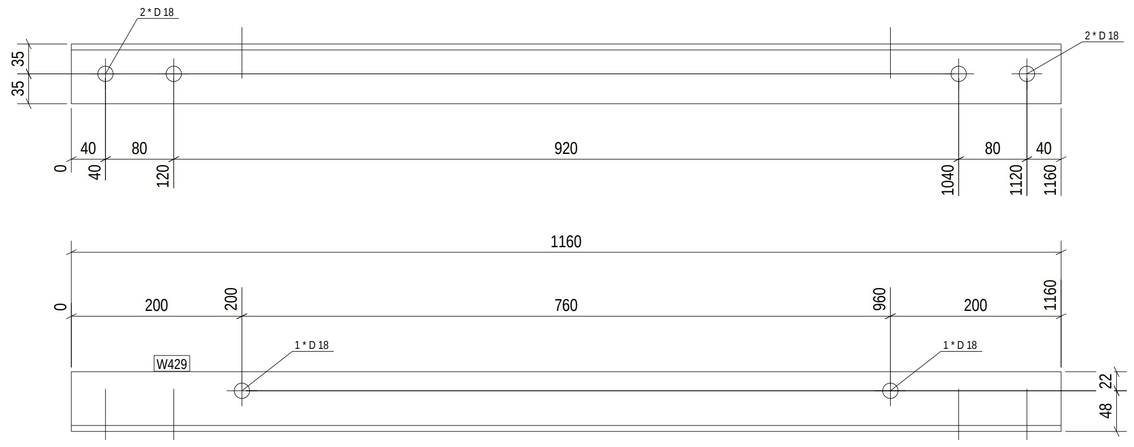

No. 1, Marked W429

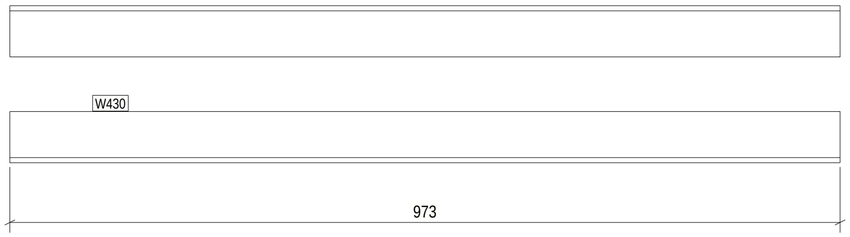

No. 1, Marked W430

1 REQ'D AS DRAWN MK'D W430
1 REQ'D AS DRAWN MK'D W429
2 REQ'D AS DRAWN MK'D W428

6 October Monorail Engineering Unit
Valid For Construction

GENERAL NOTES:

1. THE DIMENSIONS SHOWN ARE NOMINAL (IN MILLIMETERS), U.N.O.
2. WELD SIZESHALL BE AISC MINIMUM OF 6 mm UNLESS NOTED OTHERWISE.
3. ALL FIELD WELDS SHALL BE INSPECTED PER QUALITY ASSURANCE AND SPECIAL INSPECTIONS.

REFERENCE DRAWINGS

1	93M-BOA-NAT-LOT-04833
2	93M-BOA-NAT-LOT-09170
3	93M-BOA-NAT-LOT-01976
4	
5	
6	
7	
8	
9	

6TH OF OCTOBER CITY RAIL TRANSIT MONORAIL

The Authority | Hill International Consultant | Main Contractor | Structural Designer

KEY PLAN:

SCALE	SHOPDRAWING	DATE
AS SHOWN		11/20/2022

REV	DATE	DSG.	CHK.	APP.	AMENDMENTS	STATUS
A	11/20/2022	M.KH	M.KH	DR.M.M	ISSUED FOR INFORMATION	IFI

DRAWING TITLE

6TH OF OCTOBER MONORAIL SERVICE WALKWAYS ZONE (1008) W428

Project Code	Rubric	Initiator	Lot	Ref	Number	Revision
93M	0476	ACC	60DEP	DWG	08947	A

Tekla structures

Length & Area & Weight per piece						
W422	L60*6	S235JR	15	1000.0	0.24	5.4
Length & Area & Weight per piece						
W423	L70*7	S235JR	1	1160.1	0.33	8.5
Length & Area & Weight per piece						
W424	L60*6	S235JR	2	1051.9	0.25	5.6
Length & Area & Weight per piece						
W425	UPN220	S235JR	2	1000.0	0.72	29.4
Length & Area & Weight per piece						
W426	L50*5	S235JR	8	100.0	0.02	0.4
Length & Area & Weight per piece						
W427	CHQD_PL5*667.1	S235JR	1	1000.0	1.35	26.1
Mark	Profile	Grade	QTY	Length	Area	Weight

approval is subject to approval of coordination package between multi-discipline

REVIEWED WITH COMMENT MONORAILS PROJECT

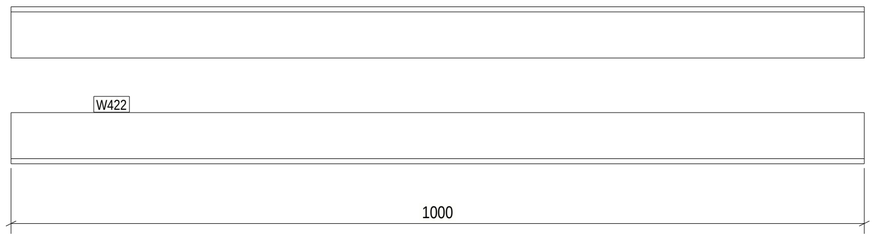

No. 15, Marked W422

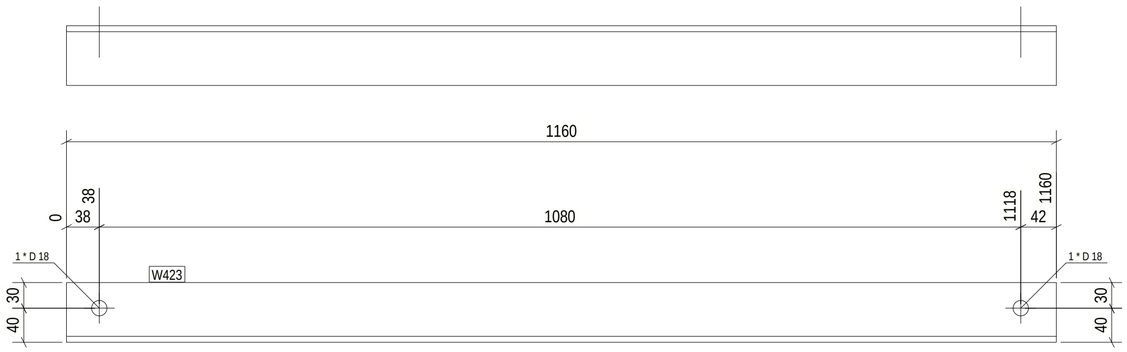

No. 1, Marked W423

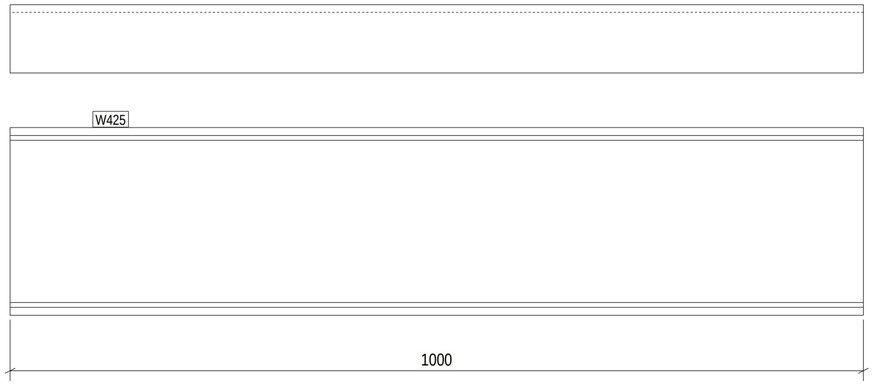

No. 2, Marked W425

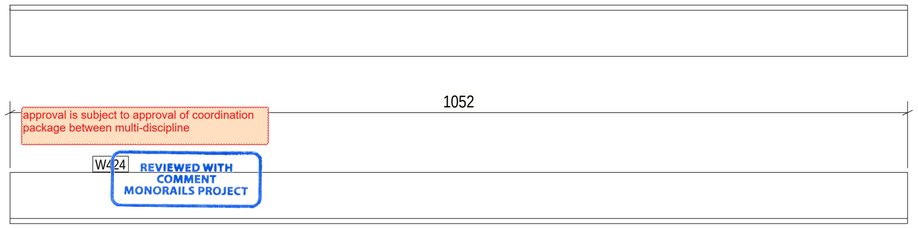

No. 2, Marked W424

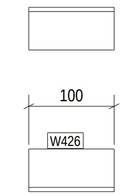

No. 8, Marked W426

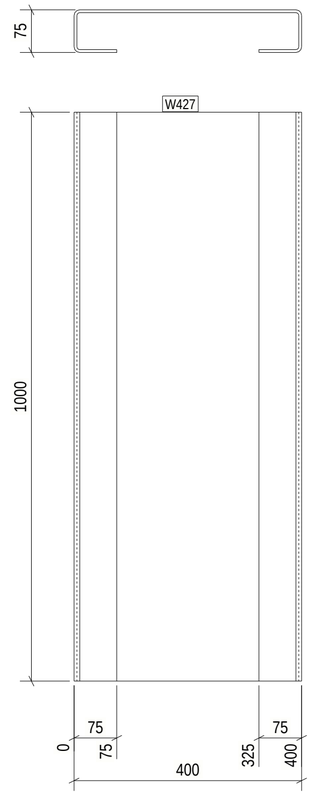

No. 1, Marked W427

1 REQ'D AS DRAWN MK'D W427
8 REQ'D AS DRAWN MK'D W426
2 REQ'D AS DRAWN MK'D W425
2 REQ'D AS DRAWN MK'D W424
1 REQ'D AS DRAWN MK'D W423
15 REQ'D AS DRAWN MK'D W422

6 October Monorail
Engineering Unit
Valid For Construction

GENERAL NOTES:

1. THE DIMENSIONS SHOWN ARE NOMINAL (IN MILLIMETERS), U.N.O.
2. WELD SIZESHALL BE AISC MINIMUM OF 6 mm UNLESS NOTED OTHERWISE.
3. ALL FIELD WELDS SHALL BE INSPECTED PER QUALITY ASSURANCE AND SPECIAL INSPECTIONS.

REFERENCE DRAWINGS

1	93M-BOA-NAT-LOT-04833
2	93M-BOA-NAT-LOT-09170
3	93M-BOA-NAT-LOT-01976
4	
5	
6	
7	
8	
9	

6TH OF OCTOBER CITY RAIL TRANSIT MONORAIL

The Authority — Hill International (Consultant) — Main Contractor — Structural Designer

KEY PLAN:

SCALE	SHOPDRAWING	DATE
AS SHOWN		11/20/2022

REV	DATE	DSG.	CHK.	APP.	AMENDMENTS	STATUS
A	11/20/2022	M.KH	M.KH	DR.M.M	ISSUED FOR INFORMATION	IFI

DRAWING TITLE

6TH OF OCTOBER MONORAIL
SERVICE WALKWAYS
ZONE (1008)
W422

Project Code	Rubric	Initiator	Lot	Ref	Number	Revision
93	M047	ACC60	DEP	DWG	0894	A

Tekla structures

approval is subject to approval of coordination package between multi-discipline

REVIEWED WITH COMMENT
MONORAILS PROJECT

Length & Area & Weight per piece						
W420	UPN220	S235JR	1	3974.3	2.86	116.7
Length & Area & Weight per piece						
W421	L70*7	S235JR	1	1160.1	0.33	8.5
Mark	Profile	Grade	QTY	Length	Area	Weight

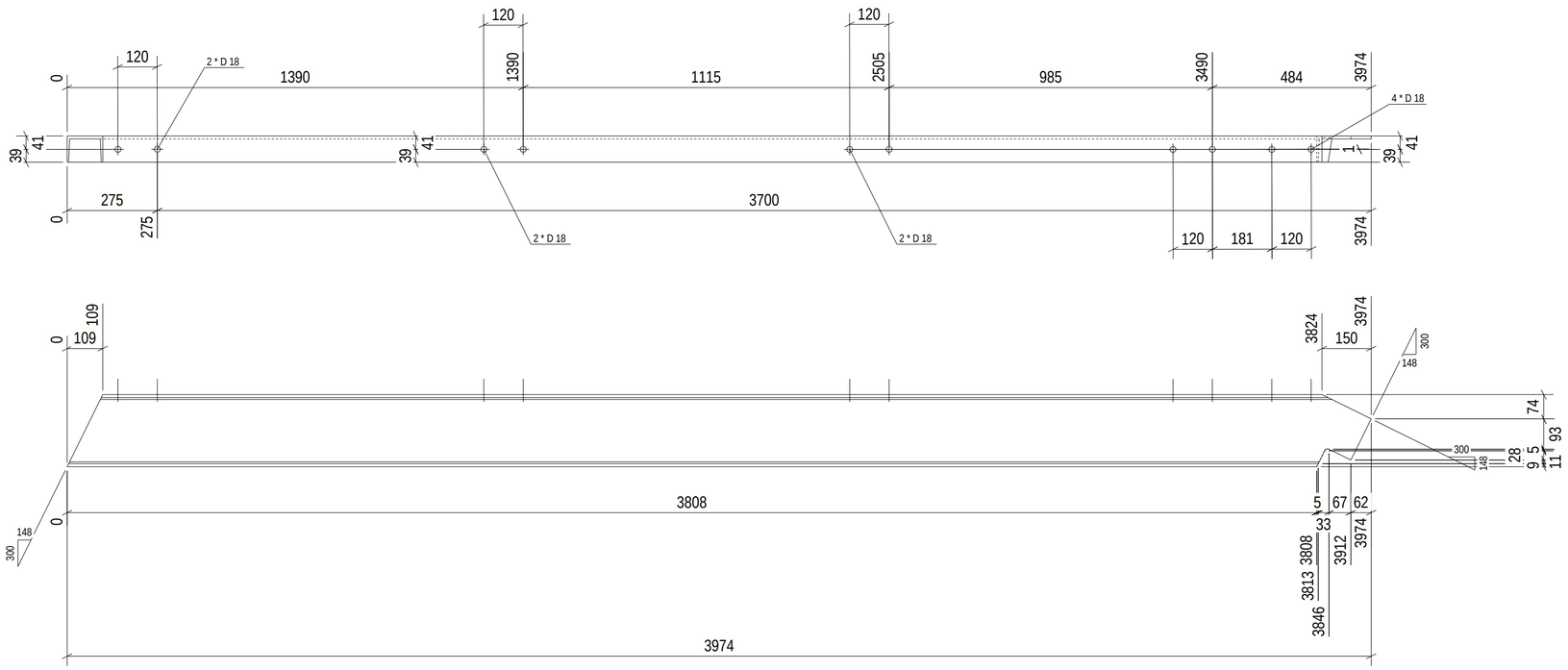

No. 1, Marked W420

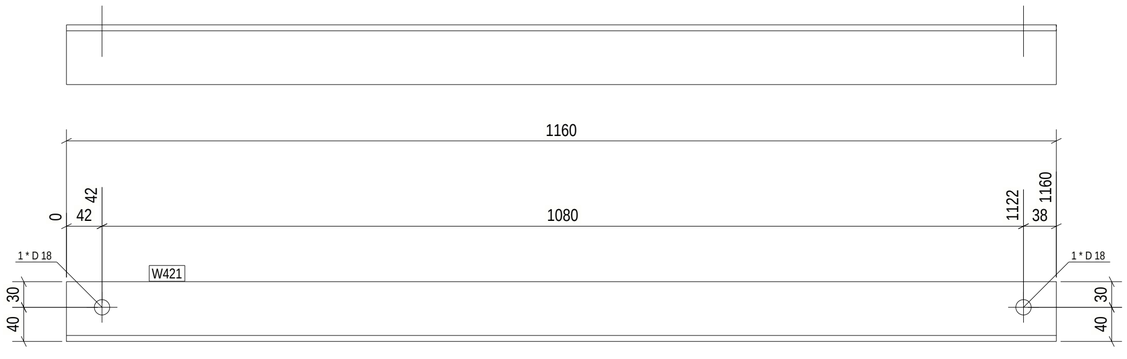

No. 1, Marked W421

1 REQ'D AS DRAWN MK'D W421
1 REQ'D AS DRAWN MK'D W420

6 October Monorail
Engineering Unit
Valid For Construction

GENERAL NOTES:

1. THE DIMENSIONS SHOWN ARE NOMINAL (IN MILLIMETERS), U.N.O.
2. WELD SIZESHALL BE AISC MINIMUM OF 6 mm UNLESS NOTED OTHERWISE.
3. ALL FIELD WELDS SHALL BE INSPECTED PER QUALITY ASSURANCE AND SPECIAL INSPECTIONS.

REFERENCE DRAWINGS

1	93M-BOA-NAT-LOT-04833
2	93M-BOA-NAT-LOT-09170
3	93M-BOA-NAT-LOT-01976
4	
5	
6	
7	
8	
9	

6TH OF OCTOBER CITY RAIL TRANSIT MONORAIL

The Authority | Hill International Consultant | Main Contractor | Structural Designer

KEY PLAN:

SCALE: AS SHOWN | SHOPDRAWING | DATE: 11/20/2022

REV	DATE	DSG.	CHK.	APP.	AMENDMENTS	STATUS
A	11/20/2022	M.KH	M.KH	DR.M.M	ISSUED FOR INFORMATION	IFI

DRAWING TITLE

6TH OF OCTOBER MONORAIL
SERVICE WALKWAYS
ZONE (1008)
W420

Project Code	Rubric	Initiator	Lot	Ref	Number	Revision
93	MO476	ACC	60DEP	DWG	0894	9	A

Tekla structures

approval is subject to approval of coordination package between multi-discipline

REVIEWED WITH COMMENT
MONORAILS PROJECT

Length & Area & Weight per piece						
W418	UPN220	S235JR	1	3974.5	2.86	116.7
Length & Area & Weight per piece						
W419	CHQD_PL5*190.9	S235JR	1	990.0	0.39	7.4
Mark	Profile	Grade	QTY	Length	Area	Weight

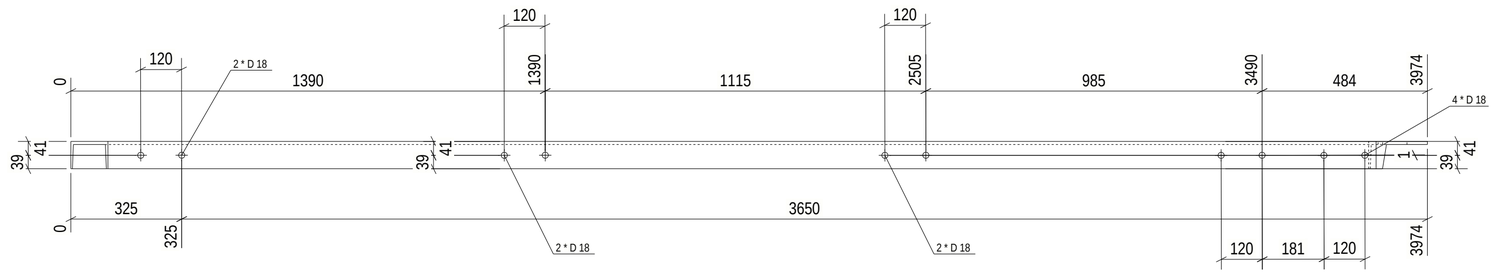

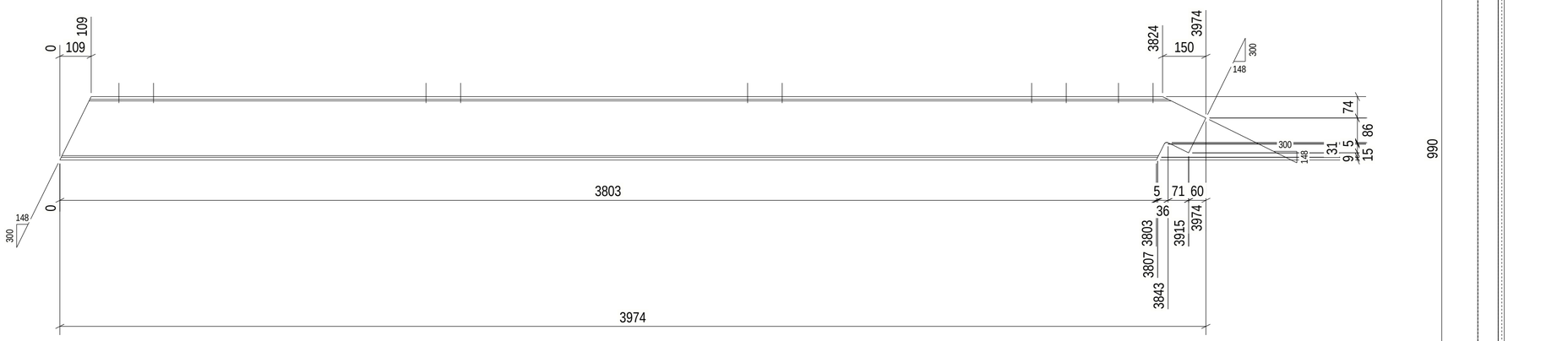

No. 1, Marked W418

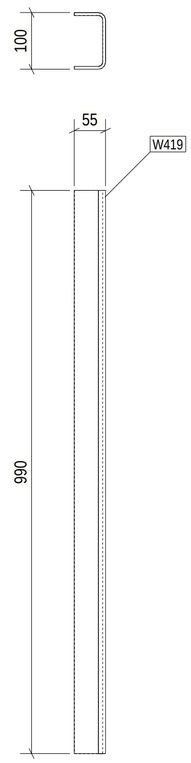

No. 1, Marked W419

1 REQ'D AS DRAWN MK'D W419
1 REQ'D AS DRAWN MK'D W418

6 October: Monorail
Engineering Unit
Valid For Construction

GENERAL NOTES:

1. THE DIMENSIONS SHOWN ARE NOMINAL (IN MILLIMETERS), U.N.O.
2. WELD SIZESHALL BE AISC MINIMUM OF 6 mm UNLESS NOTED OTHERWISE.
3. ALL FIELD WELDS SHALL BE INSPECTED PER QUALITY ASSURANCE AND SPECIAL INSPECTIONS.

REFERENCE DRAWINGS

1	93M-BOA-NAT-LOT-04833
2	93M-BOA-NAT-LOT-09170
3	93M-BOA-NAT-LOT-01976
4	
5	
6	
7	
8	
9	

6TH OF OCTOBER CITY RAIL TRANSIT MONORAIL

The Authority | Consultant: Hill International | Main Contractor: Orascom Construction, Bombardier, The Arab Contractors | Structural Designer: Innova Transportation

KEY PLAN:

SCALE	SHOPDRAWING	DATE
AS SHOWN		11/20/2022

REV	DATE	DSG.	CHK.	APP.	AMENDMENTS	STATUS
A	11/20/2022	M.KH.	M.KH	DR.M.M	ISSUED FOR INFORMATION	IFI

DRAWING TITLE

6TH OF OCTOBER MONORAIL
SERVICE WALKWAYS
ZONE (1008)
W418

Project Code	Rubric	Initiator	Lot	Ref	Number	Revision
9 3 M	0 4 7 6	A C C	6 0 D E P	D W G	0 8 9 5 0	A

Tekla structures

approval is subject to approval of coordination package between multi-discipline

REVIEWED WITH COMMENT MONORAILS PROJECT

Mark	Profile	Grade	QTY	Length	Area	Weight
Length & Area & Weight per piece						
W415	UPN220	S235JR	1	4045.4	2.91	118.8
Length & Area & Weight per piece						
W416	CHQD_PL5*371.5	S235JR	2	990.0	0.75	14.4
Length & Area & Weight per piece						
W417	CHQD_PL5*193.6	S235JR	5	990.0	0.39	7.5

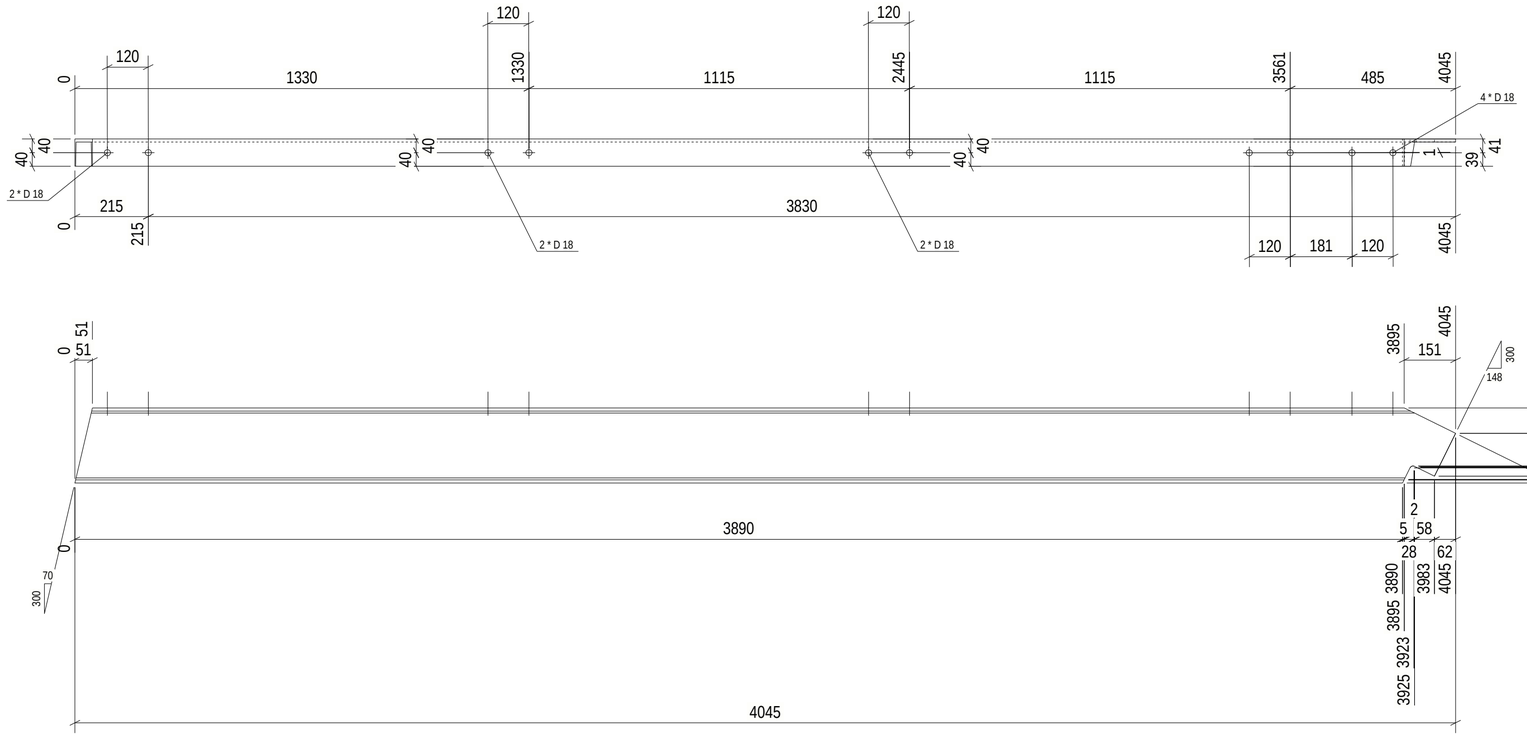

No. 1, Marked W415

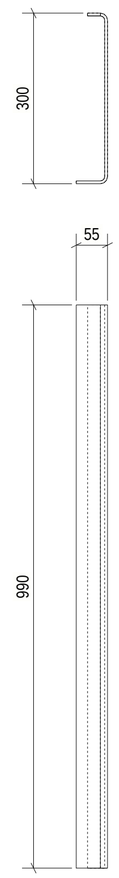

No. 2, Marked W416

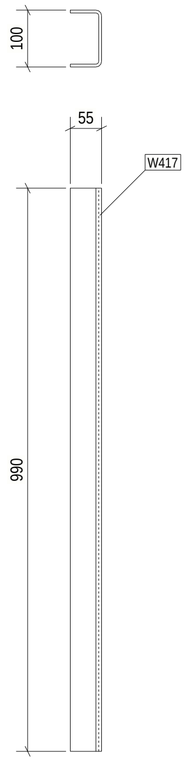

No. 5, Marked W417

5 REQ'D AS DRAWN MK'D W417
2 REQ'D AS DRAWN MK'D W416
1 REQ'D AS DRAWN MK'D W415

6 October Monorail Engineering Unit
Valid For Construction

GENERAL NOTES:

1. THE DIMENSIONS SHOWN ARE NOMINAL (IN MILLIMETERS), U.N.O.
2. WELD SIZESHALL BE AISC MINIMUM OF 6 mm UNLESS NOTED OTHERWISE.
3. ALL FIELD WELDS SHALL BE INSPECTED PER QUALITY ASSURANCE AND SPECIAL INSPECTIONS.

REFERENCE DRAWINGS

1	93M-BOA-NAT-LOT-04833
2	93M-BOA-NAT-LOT-09170
3	93M-BOA-NAT-LOT-01976
4	
5	
6	
7	
8	
9	

6TH OF OCTOBER CITY RAIL TRANSIT MONORAIL

The Authority | Hill International Consultant | Main Contractor | Structural Designer

KEY PLAN:

SCALE	SHOPDRAWING	DATE
AS SHOWN		11/20/2022

REV	DATE	DSG.	CHK.	APP.	AMENDMENTS	STATUS
A	11/20/2022	M.KH	M.KH	DR.M.M	ISSUED FOR INFORMATION	IFI

DRAWING TITLE

6TH OF OCTOBER MONORAIL SERVICE WALKWAYS ZONE (1008) W415

Project Code	Rubric	Initiator	Lot	Ref	Number	Revision
93M	0476	ACC	60DEP	DWG	08951	A

Tekla structures

Length & Area & Weight per piece						
W412	UPN220	S235JR	1	1974.9	1.42	58.0
Length & Area & Weight per piece						
W413	UPN220	S235JR	2	751.5	0.54	22.1
Length & Area & Weight per piece						
W414	UPN220	S235JR	2	751.5	0.54	22.1
Mark	Profile	Grade	QTY	Length	Area	Weight

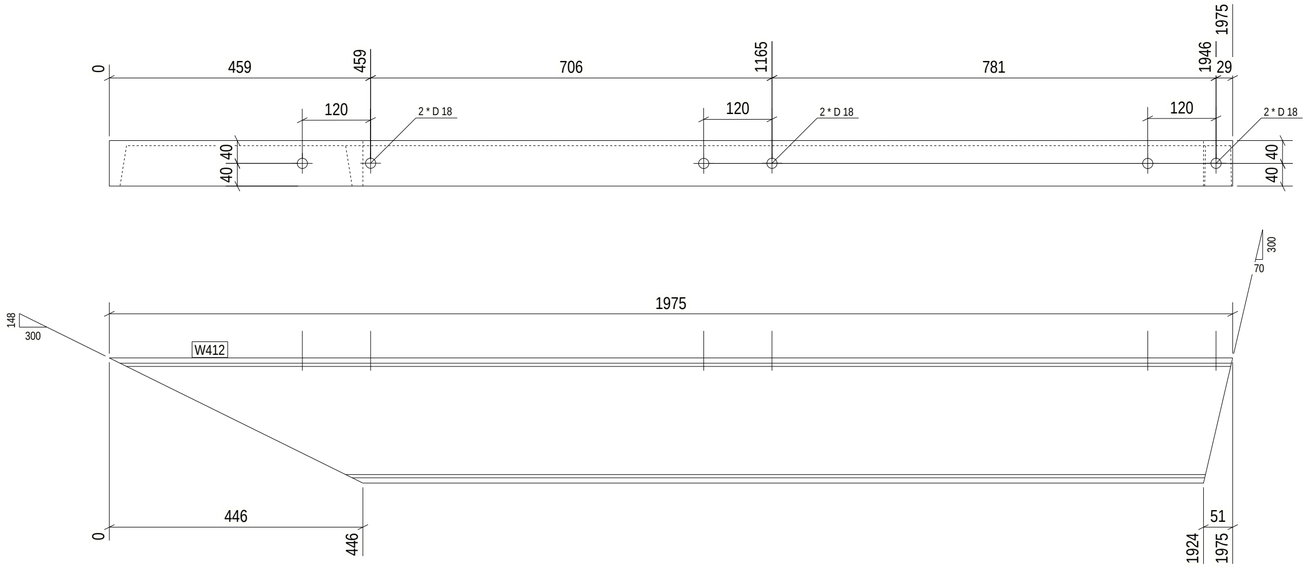

No. 1, Marked W412

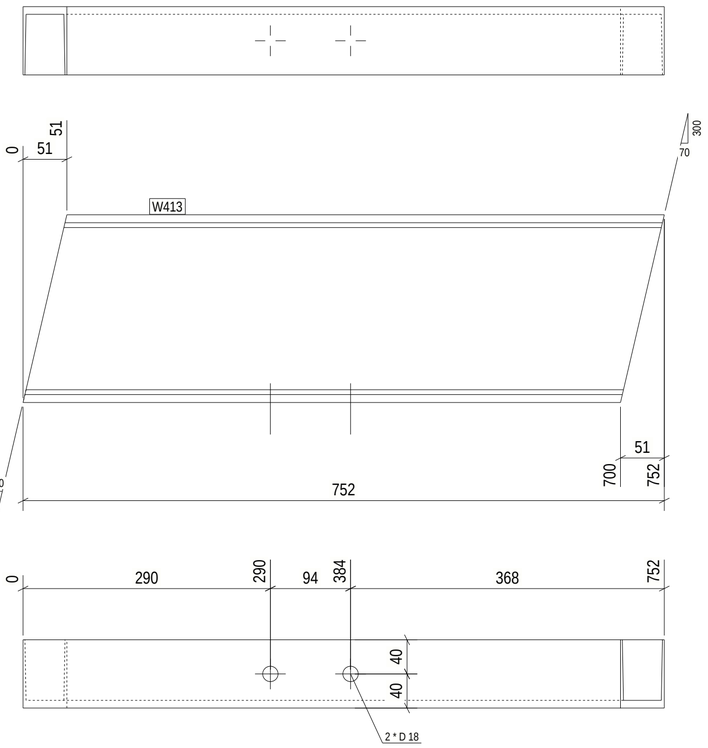

No. 2, Marked W413

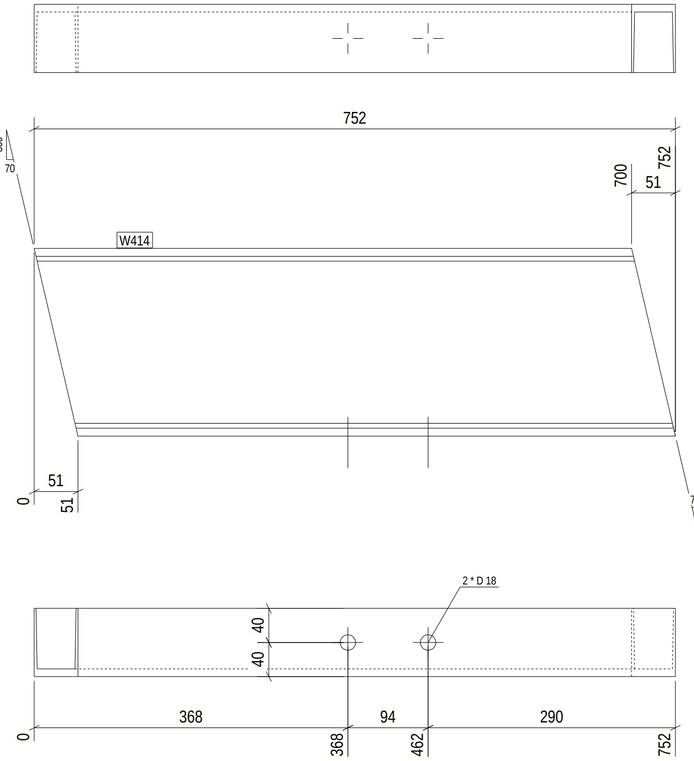

No. 2, Marked W414

2 REQ'D AS DRAWN MK'D W414
2 REQ'D AS DRAWN MK'D W413
1 REQ'D AS DRAWN MK'D W412

approval is subject to approval of coordination package between multi-discipline

REVIEWED WITH COMMENT MONORAILS PROJECT

6 October Monorail Engineering Unit Valid For Construction

GENERAL NOTES:

1. THE DIMENSIONS SHOWN ARE NOMINAL (IN MILLIMETERS), U.N.O.
2. WELD SIZESHALL BE AISC MINIMUM OF 6 mm UNLESS NOTED OTHERWISE.
3. ALL FIELD WELDS SHALL BE INSPECTED PER QUALITY ASSURANCE AND SPECIAL INSPECTIONS.

REFERENCE DRAWINGS

1	93M-BOA-NAT-LOT-04833
2	93M-BOA-NAT-LOT-09170
3	93M-BOA-NAT-LOT-01976
4	
5	
6	
7	
8	
9	

6TH OF OCTOBER CITY RAIL TRANSIT MONORAIL

The Authority — Hill International Consultant — Main Contractor — Structural Designer

KEY PLAN:

SCALE	SHOPDRAWING	DATE
AS SHOWN		11/20/2022

REV	DATE	DSG.	CHK.	APP.	AMENDMENTS	STATUS
A	11/20/2022	M.KH	M.KH	DR.M.M	ISSUED FOR INFORMATION	IFI

DRAWING TITLE

6TH OF OCTOBER MONORAIL SERVICE WALKWAYS ZONE (1008) W412

Project Code	Rubric	Initiator	Lot	Ref	Number	Revision
93M	047	6ACC	60DEP	DWG	0895	2 A

Tekla structures

Length & Area & Weight per piece						
W409	CHS48.3*4.0	S235JR	1	1098.2	0.16	4.8
Length & Area & Weight per piece						
W410	ROD12	S355JR	1	899.7	0.03	0.7
Length & Area & Weight per piece						
W411	UPN220	S235JR	1	1974.9	1.42	58.0
Mark	Profile	Grade	QTY	Length	Area	Weight

approval is subject to approval of coordination package between multi-discipline

REVIEWED WITH COMMENT
MONORAILS PROJECT

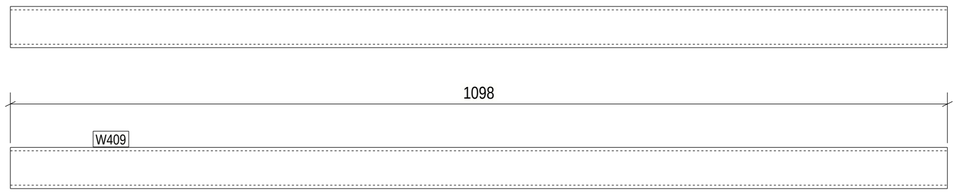

No. 1, Marked W409

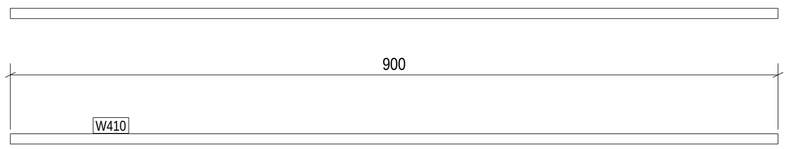

No. 1, Marked W410

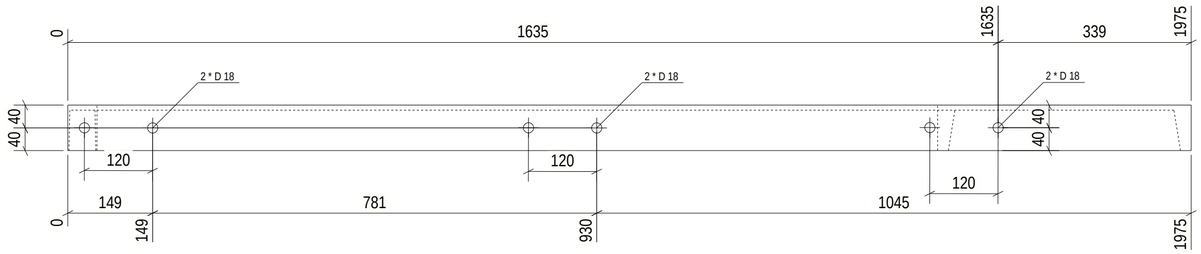

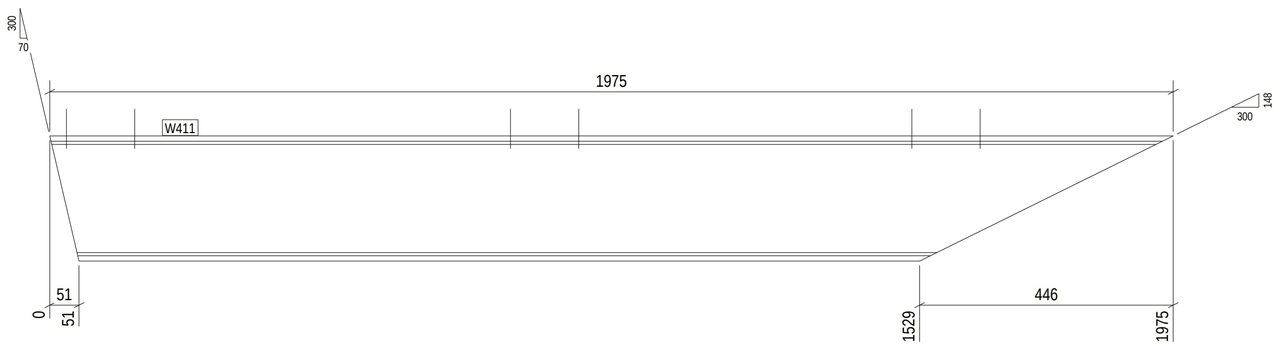

No. 1, Marked W411

1 REQ'D AS DRAWN MK'D W411
1 REQ'D AS DRAWN MK'D W410
1 REQ'D AS DRAWN MK'D W409

6 October Monorail
Engineering Unit
Valid For Construction

GENERAL NOTES:

1. THE DIMENSIONS SHOWN ARE NOMINAL (IN MILLIMETERS), U.N.O.
2. WELD SIZESHALL BE AISC MINIMUM OF 6 mm UNLESS NOTED OTHERWISE.
3. ALL FIELD WELDS SHALL BE INSPECTED PER QUALITY ASSURANCE AND SPECIAL INSPECTIONS.

REFERENCE DRAWINGS

1	93M-BOA-NAT-LOT-04833
2	93M-BOA-NAT-LOT-09170
3	93M-BOA-NAT-LOT-01976
4	
5	
6	
7	
8	
9	

6TH OF OCTOBER CITY RAIL TRANSIT MONORAIL

The Authority | Consultant: Hill International | Main Contractor: ORASCOM CONSTRUCTION, BOMBARDIER | Structural Designer: INNOVA TRANSPORTATION

KEY PLAN:

SCALE	SHOPDRAWING	DATE
AS SHOWN		12/20/2022

REV	DATE	DSG.	CHK.	APP.	AMENDMENTS	STATUS
A	11/20/2022	M.KH	M.KH	DR.M.M	ISSUED FOR INFORMATION	IFI

DRAWING TITLE

6TH OF OCTOBER MONORAIL
SERVICE WALKWAYS
ZONE (1008)
W409

Project Code	Rubric	Initiator	Lot	Ref	Number	Revision
9 3 M	0 4 7 6	A C C	6 0 D E P	D W G	0 8 9 5 3	A

Tekla structures

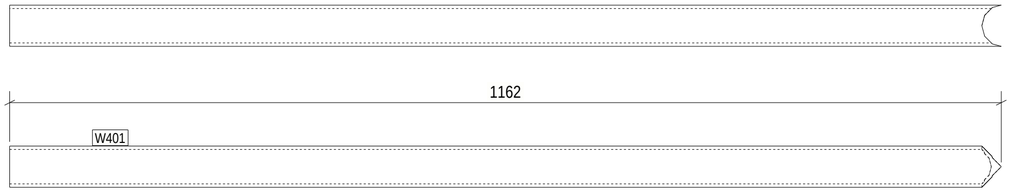

No. 23, Marked W401

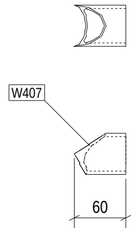

No. 2, Marked W407

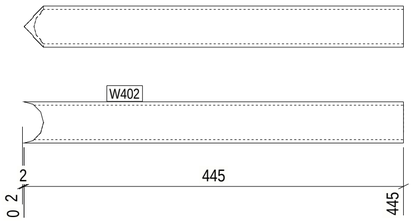

No. 1, Marked W402

approval is subject to approval of coordination package between multi-discipline

REVIEWED WITH COMMENT
MONORAILS PROJECT

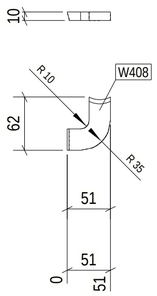

No. 24, Marked W408

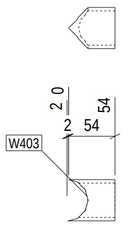

No. 1, Marked W403

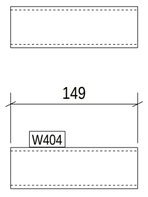

No. 1, Marked W404

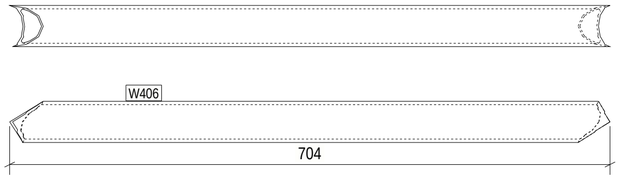

No. 1, Marked W406

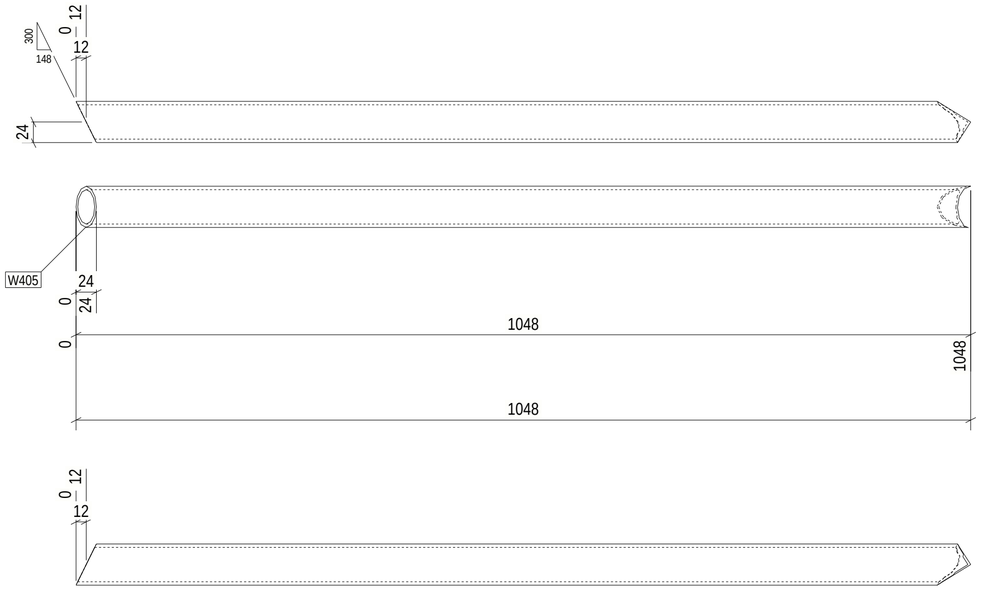

No. 1, Marked W405

Length & Area & Weight per piece						
W401	CHS48.3*4.0	S235JR	23	1162.1	0.17	5.1
Length & Area & Weight per piece						
W402	CHS48.3*4.0	S235JR	1	444.7	0.07	1.9
Length & Area & Weight per piece						
W403	CHS48.3*4.0	S235JR	1	54.3	0.01	0.2
Length & Area & Weight per piece						
W404	CHS48.3*4.0	S235JR	1	148.9	0.02	0.7
Length & Area & Weight per piece						
W405	CHS48.3*4.0	S235JR	1	1048.5	0.16	4.6
Length & Area & Weight per piece						
W406	CHS48.3*4.0	S235JR	1	703.6	0.11	3.1
Length & Area & Weight per piece						
W407	CHS48.3*4.0	S235JR	2	60.4	0.01	0.3
Length & Area & Weight per piece						
W408	PL10*25	S355JR	24	78.6	0.01	0.1
Mark	Profile	Grade	QTY	Length	Area	Weight

24 REQ'D AS DRAWN MK'D W408
2 REQ'D AS DRAWN MK'D W407
1 REQ'D AS DRAWN MK'D W406
1 REQ'D AS DRAWN MK'D W405
1 REQ'D AS DRAWN MK'D W404
1 REQ'D AS DRAWN MK'D W403
1 REQ'D AS DRAWN MK'D W402
23 REQ'D AS DRAWN MK'D W401

6 October Monorail
Engineering Unit
Valid For Construction

GENERAL NOTES:

1. THE DIMENSIONS SHOWN ARE NOMINAL (IN MILLIMETERS), U.N.O.
2. WELD SIZESHALL BE AISC MINIMUM OF 6 mm UNLESS NOTED OTHERWISE.
3. ALL FIELD WELDS SHALL BE INSPECTED PER QUALITY ASSURANCE AND SPECIAL INSPECTIONS.

REFERENCE DRAWINGS

1	93M-BOA-NAT-LOT-04833
2	93M-BOA-NAT-LOT-09170
3	93M-BOA-NAT-LOT-01976
4	
5	
6	
7	
8	
9	

6TH OF OCTOBER CITY RAIL TRANSIT MONORAIL

The Authority | Hill International Consultant | Main Contractor | Structural Designer

KEY PLAN:

SCALE: AS SHOWN | SHOPDRAWING | DATE: 17/10/2012

DRAWING TITLE
6TH OF OCTOBER MONORAIL
SERVICE WALKWAYS
ZONE (1008)
W401

REV	DATE	DSG.	CHK.	APP.	AMENDMENTS	STATUS
A	11/20/2022	M.KH	M.KH	DR.M.M	ISSUED FOR INFORMATION	IFI

Project Code	Rubric	Initiator	Lot	Ref	Number	Revision
93M	0476	ACC	60DEP	DWG	08954	A

Tekla structures

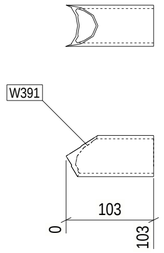

No. 1, Marked W391

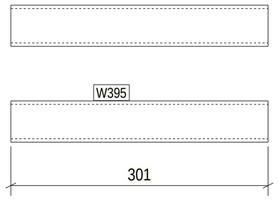

No. 12, Marked W395

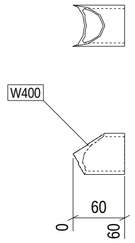

No. 2, Marked W400

approval is subject to approval of coordination package between multi-discipline

REVIEWED WITH COMMENT
MONORAILS PROJECT

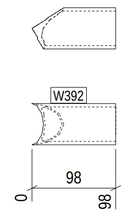

No. 1, Marked W392

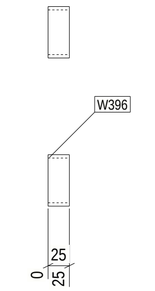

No. 106, Marked W396

Length & Area & Weight per piece						
W391	CHS48.3*4.0	S235JR	1	102.6	0.02	0.4
Length & Area & Weight per piece						
W392	CHS48.3*4.0	S235JR	1	98.1	0.01	0.4
Length & Area & Weight per piece						
W393	CHS48.3*4.0	S235JR	1	103.1	0.02	0.5
Length & Area & Weight per piece						
W394	CHS48.3*4.0	S235JR	2	58.8	0.01	0.3
Length & Area & Weight per piece						
W395	CHS48.3*4.0	S235JR	12	301.4	0.05	1.3
Length & Area & Weight per piece						
W396	PIPE2SCH40	S235JR	106	25.0	0.01	0.1
Length & Area & Weight per piece						
W397	PL10*25	S355JR	28	78.9	0.01	0.1
Length & Area & Weight per piece						
W398	CHS48.3*4.0	S235JR	1	701.6	0.11	3.1
Length & Area & Weight per piece						
W399	CHS48.3*4.0	S235JR	4	776.5	0.12	3.4
Length & Area & Weight per piece						
W400	CHS48.3*4.0	S235JR	2	60.4	0.01	0.3
Mark	Profile	Grade	QTY	Length	Area	Weight

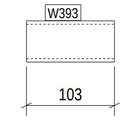

No. 1, Marked W393

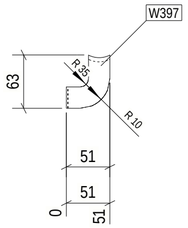

No. 28, Marked W397

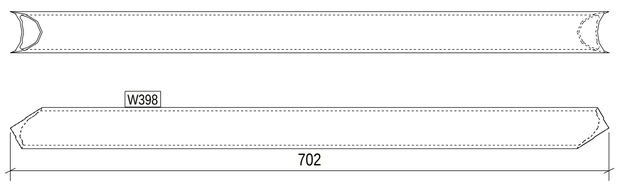

No. 1, Marked W398

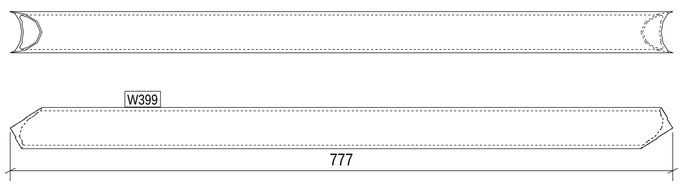

No. 4, Marked W399

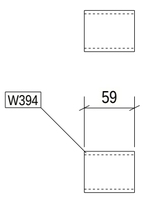

No. 2, Marked W394

2 REQ'D AS DRAWN MK'D W400
4 REQ'D AS DRAWN MK'D W399
1 REQ'D AS DRAWN MK'D W398
28 REQ'D AS DRAWN MK'D W397
106 REQ'D AS DRAWN MK'D W396
12 REQ'D AS DRAWN MK'D W395
2 REQ'D AS DRAWN MK'D W394
1 REQ'D AS DRAWN MK'D W393
1 REQ'D AS DRAWN MK'D W392
1 REQ'D AS DRAWN MK'D W391

6 October Monorail
Engineering Unit
Valid For Construction

GENERAL NOTES:

1. THE DIMENSIONS SHOWN ARE NOMINAL (IN MILLIMETERS), U.N.O.
2. WELD SIZESHALL BE AISC MINIMUM OF 6 mm UNLESS NOTED OTHERWISE.
3. ALL FIELD WELDS SHALL BE INSPECTED PER QUALITY ASSURANCE AND SPECIAL INSPECTIONS.

REFERENCE DRAWINGS

1	93M-BOA-NAT-LOT-04833
2	93M-BOA-NAT-LOT-09170
3	93M-BOA-NAT-LOT-01976
4	
5	
6	
7	
8	
9	

6TH OF OCTOBER CITY RAIL TRANSIT MONORAIL

The Authority — Hill International (Consultant) — Main Contractor — Structural Designer

KEY PLAN:

SCALE	SHOPDRAWING	DATE
AS SHOWN		11/20/2022

REV	DATE	DSG.	CHK.	APP.	AMENDMENTS	STATUS
A	11/20/2022	M.KH.	M.KH	DR.M.M	ISSUED FOR INFORMATION	IFI

DRAWING TITLE

6TH OF OCTOBER MONORAIL
SERVICE WALKWAYS
ZONE (1008)
W391

Project Code	Rubric	Initiator	Lot	Ref	Number	Revision
93M	047	6ACC	60DE	PDWG	0895	A

Tekla structures

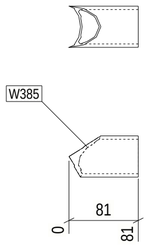

No. 2, Marked W385

approval is subject to approval of coordination package between multi-discipline

REVIEWED WITH COMMENT
MONORAILS PROJECT

Length & Area & Weight per piece						
W385	CHS48.3*4.0	S235JR	2	81.2	0.01	0.4
Length & Area & Weight per piece						
W386	CHS48.3*4.0	S235JR	8	1046.5	0.16	4.6
Length & Area & Weight per piece						
W387	CHS48.3*4.0	S235JR	2	351.5	0.05	1.5
Length & Area & Weight per piece						
W388	CHS48.3*4.0	S235JR	2	1132.4	0.17	5.0
Length & Area & Weight per piece						
W389	CHS48.3*4.0	S235JR	10	1162.2	0.17	5.1
Length & Area & Weight per piece						
W390	CHS48.3*4.0	S235JR	1	684.8	0.10	3.0
Mark	Profile	Grade	QTY	Length	Area	Weight

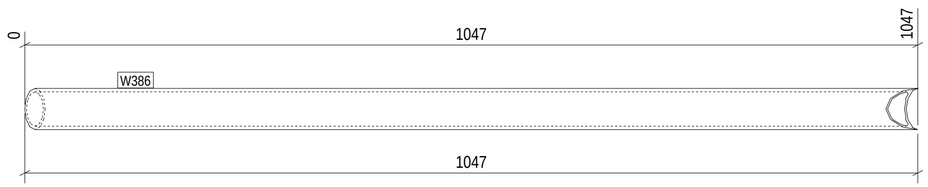

No. 8, Marked W386

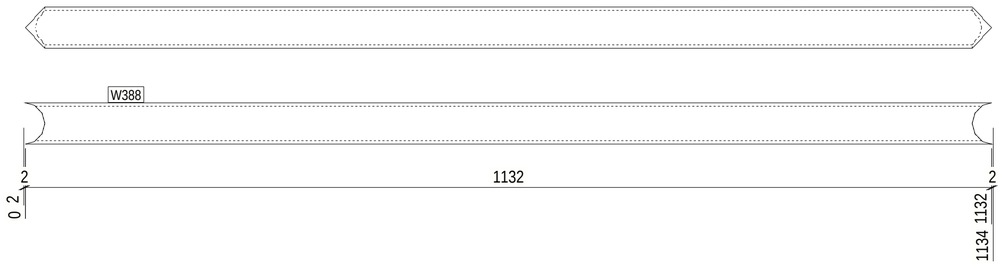

No. 2, Marked W388

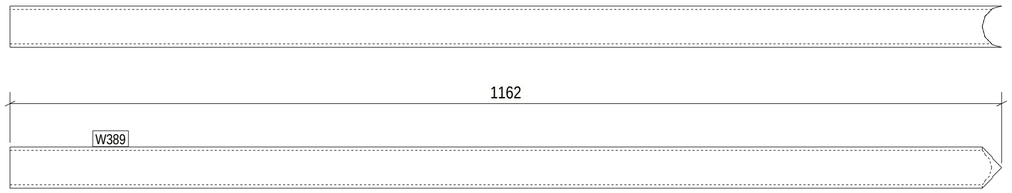

No. 10, Marked W389

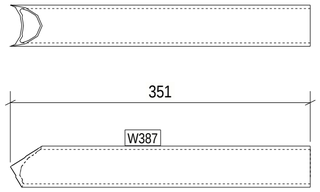

No. 2, Marked W387

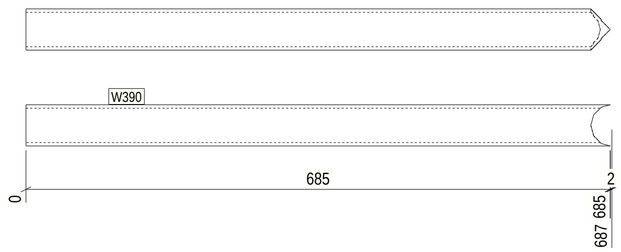

No. 1, Marked W390

1 REQ'D AS DRAWN MK'D W390
10 REQ'D AS DRAWN MK'D W389
2 REQ'D AS DRAWN MK'D W388
2 REQ'D AS DRAWN MK'D W387
8 REQ'D AS DRAWN MK'D W386
2 REQ'D AS DRAWN MK'D W385

6 October Monorail
Engineering Unit
Valid For Construction

GENERAL NOTES:

1. THE DIMENSIONS SHOWN ARE NOMINAL (IN MILLIMETERS), U.N.O.
2. WELD SIZESHALL BE AISC MINIMUM OF 6 mm UNLESS NOTED OTHERWISE.
3. ALL FIELD WELDS SHALL BE INSPECTED PER QUALITY ASSURANCE AND SPECIAL INSPECTIONS.

REFERENCE DRAWINGS

1	93M-BOA-NAT-LOT-04833
2	93M-BOA-NAT-LOT-09170
3	93M-BOA-NAT-LOT-01976
4	
5	
6	
7	
8	
9	

6TH OF OCTOBER CITY RAIL TRANSIT MONORAIL

The Authority — Hill International (Consultant) — Main Contractor — Structural Designer

KEY PLAN:

SCALE	SHOPDRAWING	DATE
AS SHOWN		11/20/2022

DRAWING TITLE
6TH OF OCTOBER MONORAIL
SERVICE WALKWAYS
ZONE (1008)
W385

REV	DATE	DSG.	CHK.	APP.	AMENDMENTS	STATUS
A	11/20/2022	M.KH	M.KH	DR.M.M	ISSUED FOR INFORMATION	IFI

Project Code	Rubric	Initiator	Lot	Ref	Number	Revision
9 3 M	0 4 7 6	A C C	6 0 D E P	D W G	0 8 9 5 6	A

Tekla structures

approval is subject to approval of coordination package between multi-discipline

REVIEWED WITH COMMENT
MONORAILS PROJECT

Length & Area & Weight per piece						
W380	CHS48.3*4.0	S235JR	24	1046.6	0.16	4.6
Length & Area & Weight per piece						
W381	CHS48.3*4.0	S235JR	2	1046.9	0.16	4.6
Length & Area & Weight per piece						
W382	CHS48.3*4.0	S235JR	2	1046.9	0.16	4.6
Length & Area & Weight per piece						
W383	CHS48.3*4.0	S235JR	2	63.3	0.01	0.3
Length & Area & Weight per piece						
W384	CHS48.3*4.0	S235JR	3	102.5	0.02	0.4
Mark	Profile	Grade	QTY	Length	Area	Weight

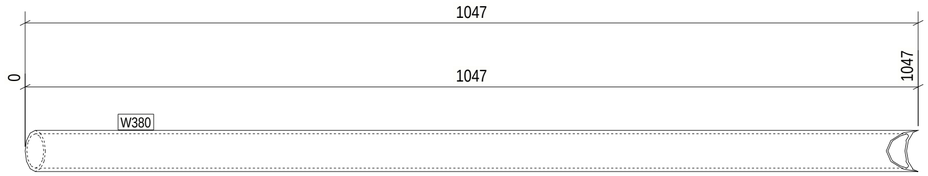

No. 24, Marked W380

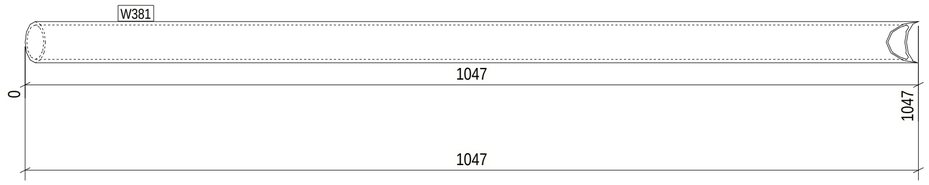

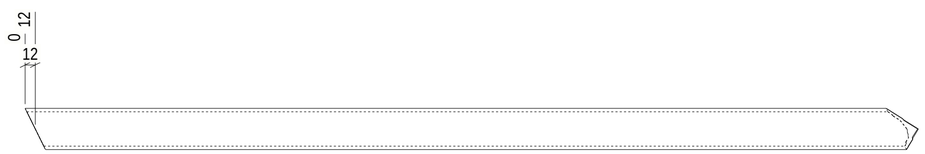

No. 2, Marked W381

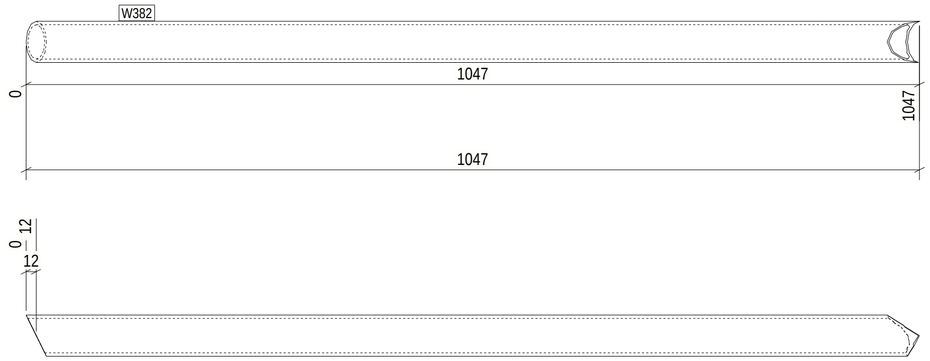

No. 2, Marked W382

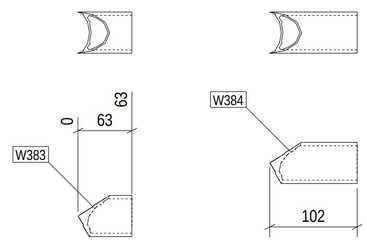

No. 2, Marked W383 No. 3, Marked W384

3 REQ'D AS DRAWN MK'D W384
2 REQ'D AS DRAWN MK'D W383
2 REQ'D AS DRAWN MK'D W382
2 REQ'D AS DRAWN MK'D W381
24 REQ'D AS DRAWN MK'D W380

6 October Monorail
Engineering Unit
Valid For Construction

GENERAL NOTES:

1. THE DIMENSIONS SHOWN ARE NOMINAL (IN MILLIMETERS), U.N.O.
2. WELD SIZESHALL BE AISC MINIMUM OF 6 mm UNLESS NOTED OTHERWISE.
3. ALL FIELD WELDS SHALL BE INSPECTED PER QUALITY ASSURANCE AND SPECIAL INSPECTIONS.

REFERENCE DRAWINGS

1	93M-BOA-NAT-LOT-04833
2	93M-BOA-NAT-LOT-09170
3	93M-BOA-NAT-LOT-01976
4	
5	
6	
7	
8	
9	

6TH OF OCTOBER CITY RAIL TRANSIT MONORAIL

The Authority | Hill International Consultant | Main Contractor | Structural Designer

KEY PLAN:

SCALE: AS SHOWN | SHOPDRAWING | DATE: 12/20/2022

REV	DATE	DSG.	CHK.	APP.	AMENDMENTS	STATUS
A	11/20/2022	M.KH	M.KH	DR.M.M	ISSUED FOR INFORMATION	IFI

DRAWING TITLE
6TH OF OCTOBER MONORAIL
SERVICE WALKWAYS
ZONE (1008)
W380

Project Code	Rubric	Initiator	Lot	Ref	Number	Revision
93	M047	ACC60	DEP	DWG	08957	A

Tekla structures

Length & Area & Weight per piece						
W372	ROD12	S355JR	466	902.1	0.03	0.7
Length & Area & Weight per piece						
W373	CHS48.3*4.0	S235JR	2	1061.1	0.16	4.6
Length & Area & Weight per piece						
W374	CHS48.3*4.0	S235JR	8	981.0	0.15	4.3
Length & Area & Weight per piece						
W375	CHS48.3*4.0	S235JR	1	401.5	0.06	1.8
Length & Area & Weight per piece						
W376	ROD32	S235JR	35	100.0	0.01	0.6
Length & Area & Weight per piece						
W377	CHS48.3*4.0	S235JR	2	351.5	0.05	1.5
Length & Area & Weight per piece						
W378	CHS48.3*4.0	S235JR	20	316.6	0.05	1.4
Length & Area & Weight per piece						
W379	CHS48.3*4.0	S235JR	4	311.6	0.05	1.4
Mark	Profile	Grade	QTY	Length	Area	Weight

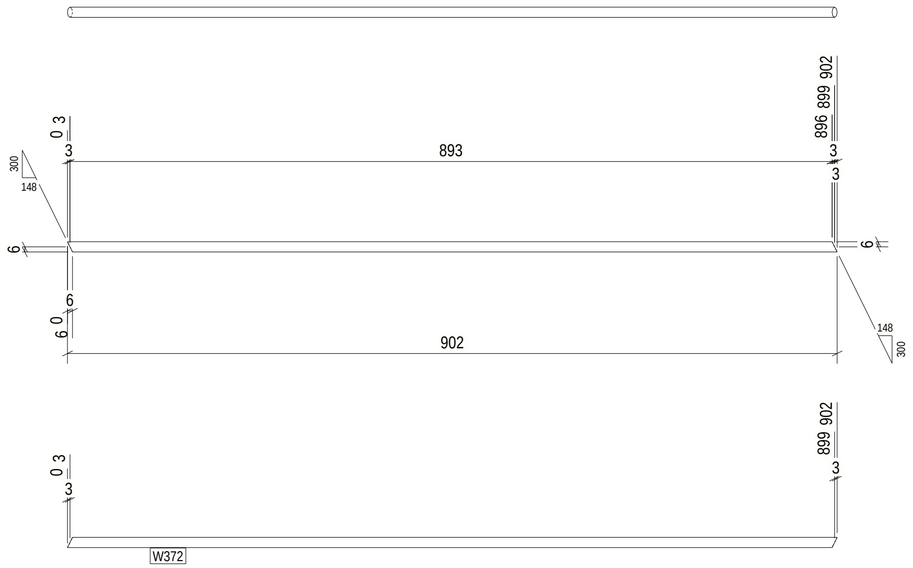

No. 466, Marked W372

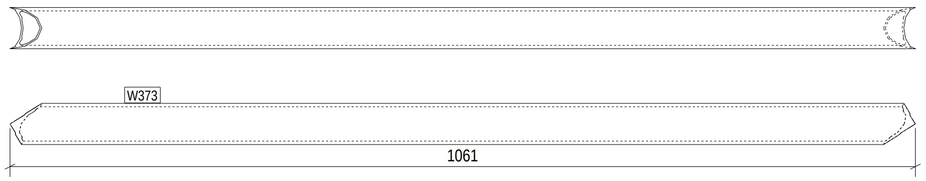

No. 2, Marked W373

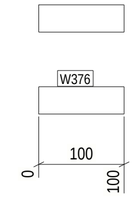

No. 35, Marked W376

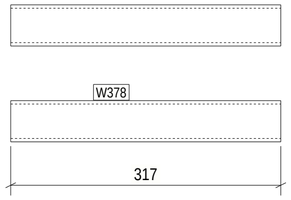

No. 20, Marked W378

approval is subject to approval of coordination package between multi-discipline

REVIEWED WITH COMMENT MONORAILS PROJECT

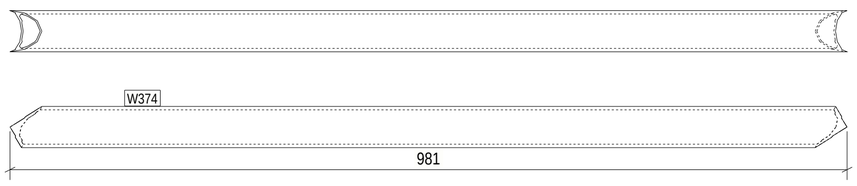

No. 8, Marked W374

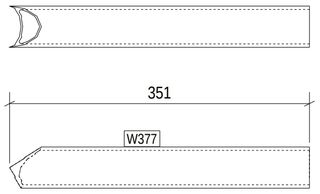

No. 2, Marked W377

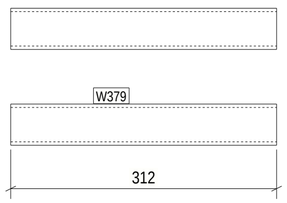

No. 4, Marked W379

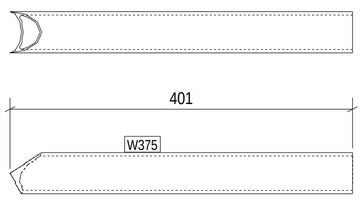

No. 1, Marked W375

4 REQ'D AS DRAWN MK'D W379
20 REQ'D AS DRAWN MK'D W378
2 REQ'D AS DRAWN MK'D W377
35 REQ'D AS DRAWN MK'D W376
1 REQ'D AS DRAWN MK'D W375
8 REQ'D AS DRAWN MK'D W374
2 REQ'D AS DRAWN MK'D W373
466 REQ'D AS DRAWN MK'D W372

6 October Monorail
Engineering Unit
Valid For Construction

GENERAL NOTES:

1. THE DIMENSIONS SHOWN ARE NOMINAL (IN MILLIMETERS), U.N.O.
2. WELD SIZESHALL BE AISC MINIMUM OF 6 mm UNLESS NOTED OTHERWISE.
3. ALL FIELD WELDS SHALL BE INSPECTED PER QUALITY ASSURANCE AND SPECIAL INSPECTIONS.

REFERENCE DRAWINGS

1	93M-BOA-NAT-LOT-04833
2	93M-BOA-NAT-LOT-09170
3	93M-BOA-NAT-LOT-01976
4	
5	
6	
7	
8	
9	

6TH OF OCTOBER CITY RAIL TRANSIT MONORAIL

The Authority — Hill International (Consultant) — Main Contractor — Structural Designer

KEY PLAN:

SCALE: AS SHOWN | SHOPDRAWING | DATE: 11/20/2022

REV	DATE	DSG.	CHK.	APP.	AMENDMENTS	STATUS
A	11/20/2022	M.KH	M.KH	DR.M.M	ISSUED FOR INFORMATION	IFI

DRAWING TITLE

6TH OF OCTOBER MONORAIL SERVICE WALKWAYS ZONE (1008)
W372

Project Code	Rubric	Initiator	Lot	Ref	Number	Revision
93	M047	ACC60	DEP	DWG	0895	A

Tekla structures

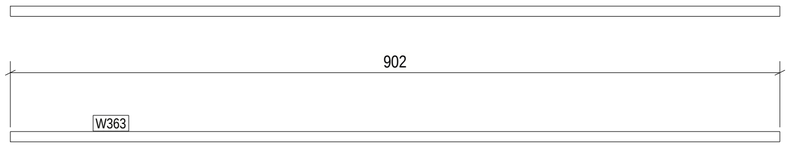

No. 355, Marked W363

approval is subject to approval of coordination package between multi-discipline

REVIEWED WITH COMMENT MONORAILS PROJECT

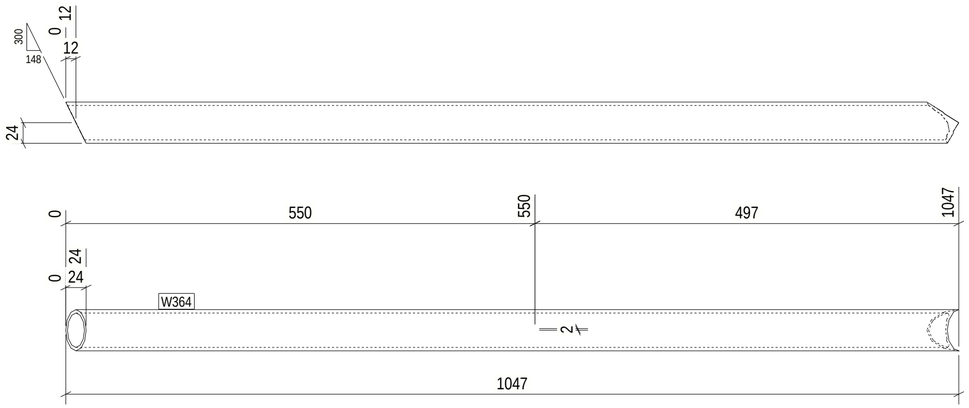

No. 31, Marked W364

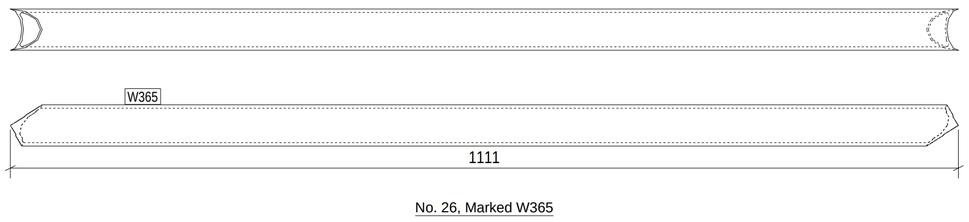

No. 26, Marked W365

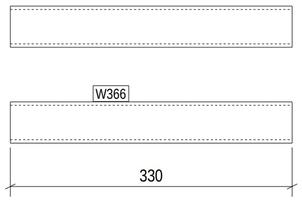

No. 12, Marked W366

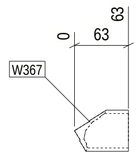

No. 2, Marked W367

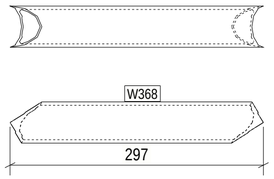

No. 12, Marked W368

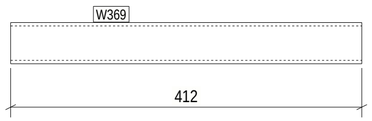

No. 1, Marked W369

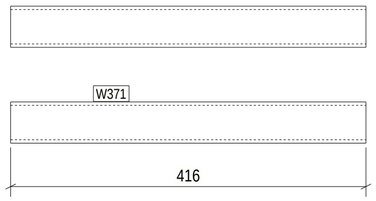

No. 5, Marked W371

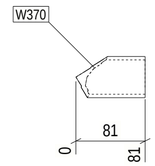

No. 3, Marked W370

Length & Area & Weight per piece						
W363	ROD12	S355JR	355	901.9	0.03	0.7
Length & Area & Weight per piece						
W364	CHS48.3*4.0	S235JR	31	1046.6	0.16	4.6
Length & Area & Weight per piece						
W365	CHS48.3*4.0	S235JR	26	1111.1	0.17	4.9
Length & Area & Weight per piece						
W366	CHS48.3*4.0	S235JR	12	330.3	0.05	1.4
Length & Area & Weight per piece						
W367	CHS48.3*4.0	S235JR	2	63.3	0.01	0.3
Length & Area & Weight per piece						
W368	CHS48.3*4.0	S235JR	12	297.0	0.04	1.3
Length & Area & Weight per piece						
W369	CHS48.3*4.0	S235JR	1	411.5	0.06	1.8
Length & Area & Weight per piece						
W370	CHS48.3*4.0	S235JR	3	81.1	0.01	0.4
Length & Area & Weight per piece						
W371	CHS48.3*4.0	S235JR	5	416.4	0.06	1.8
Mark	Profile	Grade	QTY	Length	Area	Weight

5 REQ'D AS DRAWN MK'D W371
3 REQ'D AS DRAWN MK'D W370
1 REQ'D AS DRAWN MK'D W369
12 REQ'D AS DRAWN MK'D W368
2 REQ'D AS DRAWN MK'D W367
12 REQ'D AS DRAWN MK'D W366
26 REQ'D AS DRAWN MK'D W365
31 REQ'D AS DRAWN MK'D W364
355 REQ'D AS DRAWN MK'D W363

6 October Monorail
Engineering Unit
Valid For Construction

GENERAL NOTES:

1. THE DIMENSIONS SHOWN ARE NOMINAL (IN MILLIMETERS), U.N.O.
2. WELD SIZESHALL BE AISC MINIMUM OF 6 mm UNLESS NOTED OTHERWISE.
3. ALL FIELD WELDS SHALL BE INSPECTED PER QUALITY ASSURANCE AND SPECIAL INSPECTIONS.

REFERENCE DRAWINGS

1	93M-BOA-NAT-LOT-04833
2	93M-BOA-NAT-LOT-09170
3	93M-BOA-NAT-LOT-01976
4	
5	
6	
7	
8	
9	

6TH OF OCTOBER CITY RAIL TRANSIT MONORAIL

The Authority — Hill International (Consultant) — Main Contractor — Structural Designer

KEY PLAN:

REV	DATE	DSG.	CHK.	APP.	AMENDMENTS	STATUS
A	11/20/2022	M.KH	M.KH	DR.M.M	ISSUED FOR INFORMATION	IFI

SCALE	SHOPDRAWING	DATE
AS SHOWN		12/20/2022

DRAWING TITLE

6TH OF OCTOBER MONORAIL
SERVICE WALKWAYS
ZONE (1008)
W363

Project Code	Rubric	Initiator	Lot	Ref	Number	Revision
93M	0476	ACC	60DEP	DWG	08959	A

Tekla structures

approval is subject to approval of coordination package between multi-discipline

REVIEWED WITH COMMENT
MONORAILS PROJECT

Length & Area & Weight per piece						
W340	UPN160	S235JR	4	5920.0	3.26	111.5
Length & Area & Weight per piece						
W344	PL8*50	S355JR	5	70.0	0.01	0.2
Length & Area & Weight per piece						
W361	PL8*107.9	S355JR	20	249.6	0.05	1.4
Length & Area & Weight per piece						
W362	PL10*25	S355JR	1	115.1	0.01	0.2
Mark	Profile	Grade	QTY	Length	Area	Weight

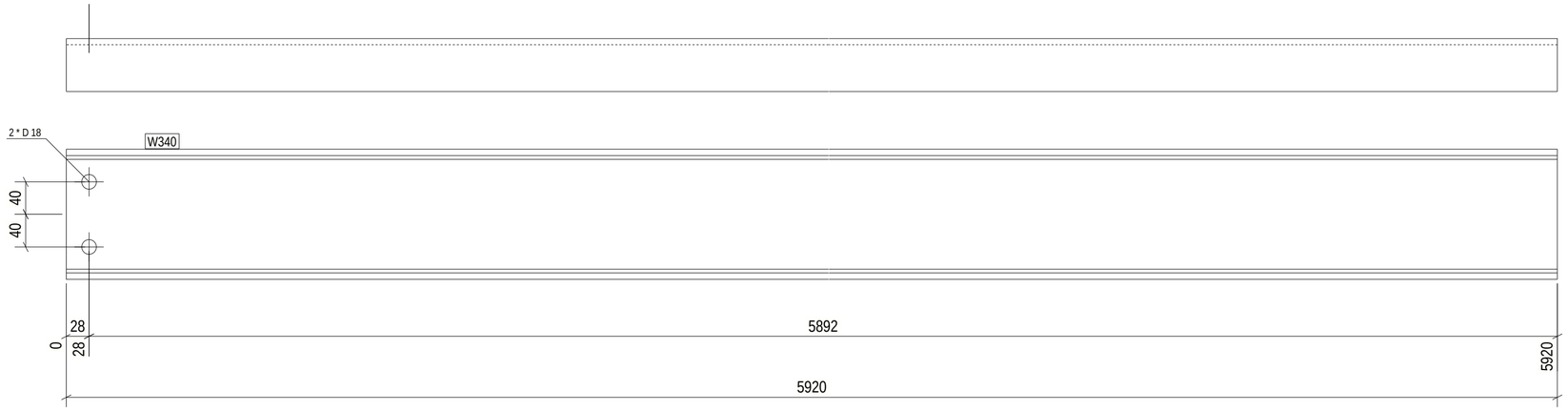

No. 4, Marked W340

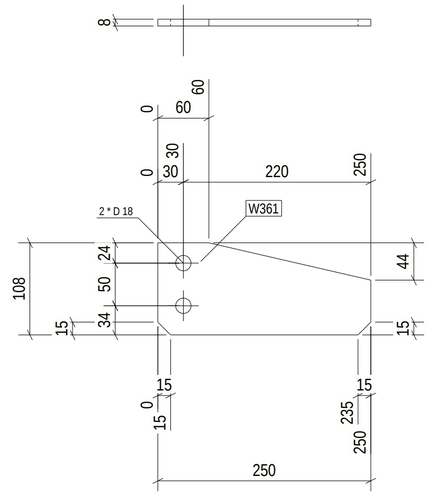

No. 20, Marked W361

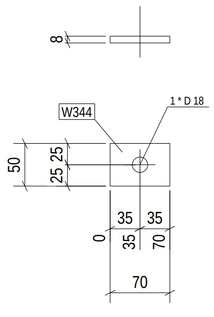

No. 5, Marked W344

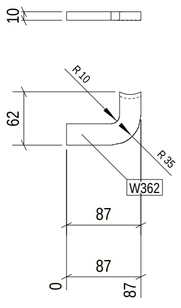

No. 1, Marked W362

1 REQ'D AS DRAWN MK'D W362
20 REQ'D AS DRAWN MK'D W361
5 REQ'D AS DRAWN MK'D W344
4 REQ'D AS DRAWN MK'D W340

6 October Monorail
Engineering Unit
Valid For Construction

GENERAL NOTES:

1. THE DIMENSIONS SHOWN ARE NOMINAL (IN MILLIMETERS), U.N.O.
2. WELD SIZESHALL BE AISC MINIMUM OF 6 mm UNLESS NOTED OTHERWISE.
3. ALL FIELD WELDS SHALL BE INSPECTED PER QUALITY ASSURANCE AND SPECIAL INSPECTIONS.

REFERENCE DRAWINGS

1	93M-BOA-NAT-LOT-04833
2	93M-BOA-NAT-LOT-09170
3	93M-BOA-NAT-LOT-01976
4	
5	
6	
7	
8	
9	

6TH OF OCTOBER CITY RAIL TRANSIT MONORAIL

The Authority — Hill International Consultant — Main Contractor — Structural Designer

KEY PLAN:

SCALE	SHOPDRAWING	DATE
AS SHOWN		12/20/2022

REV	DATE	DSG.	CHK.	APP.	AMENDMENTS	STATUS
A	11/20/2022	M.KH	M.KH	DR.M.M	ISSUED FOR INFORMATION	IFI

DRAWING TITLE

6TH OF OCTOBER MONORAIL
SERVICE WALKWAYS
ZONE (1008)
W361

Project Code	Rubric	Initiator	Lot	Ref	Number	Revision
93M	047	6ACC	60DEP	DWG	0896	0

Tekla structures

approval is subject to approval of coordination package between multi-discipline

REVIEWED WITH COMMENT
MONORAILS PROJECT

Length & Area & Weight per piece						
W335	UPN160	S235JR	4	2368.0	1.30	44.6
Length & Area & Weight per piece						
W336	UPN160	S235JR	4	4144.0	2.28	78.1
Mark	Profile	Grade	QTY	Length	Area	Weight

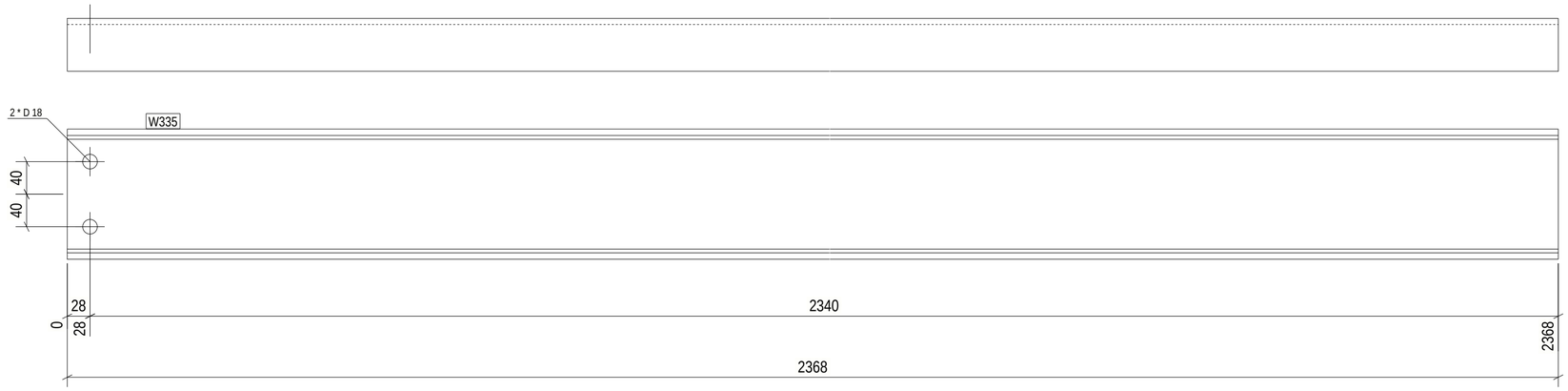

No. 4, Marked W335

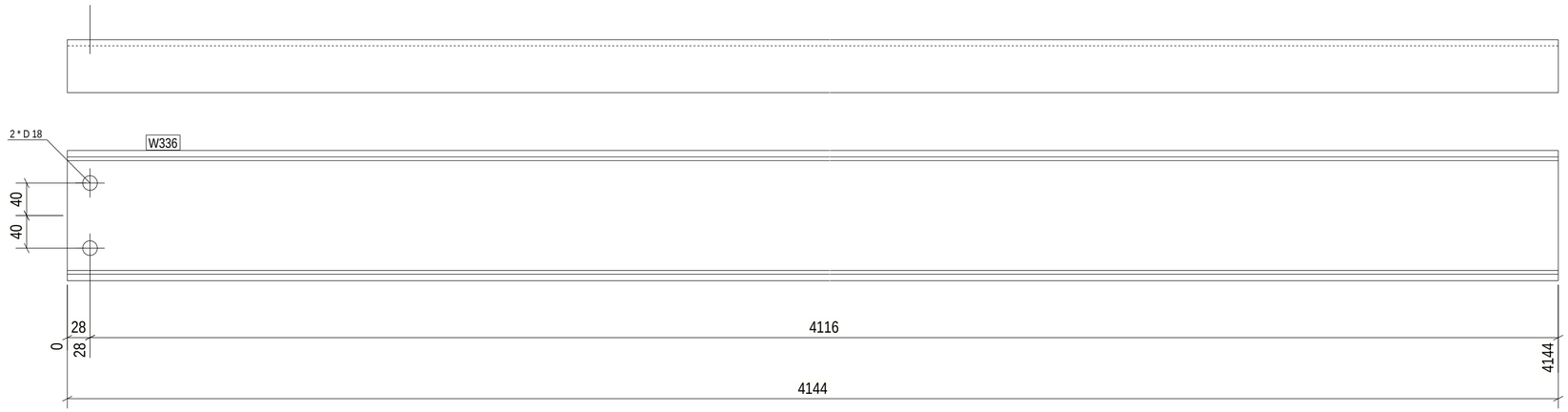

No. 4, Marked W336

4 REQ'D AS DRAWN MK'D W336
4 REQ'D AS DRAWN MK'D W335

6 October Monorail
Engineering Unit
Valid For Construction

GENERAL NOTES:

1. THE DIMENSIONS SHOWN ARE NOMINAL (IN MILLIMETERS), U.N.O.
2. WELD SIZESHALL BE AISC MINIMUM OF 6 mm UNLESS NOTED OTHERWISE.
3. ALL FIELD WELDS SHALL BE INSPECTED PER QUALITY ASSURANCE AND SPECIAL INSPECTIONS.

REFERENCE DRAWINGS

1	93M-BOA-NAT-LOT-04833
2	93M-BOA-NAT-LOT-09170
3	93M-BOA-NAT-LOT-01976
4	
5	
6	
7	
8	
9	

6TH OF OCTOBER CITY RAIL TRANSIT MONORAIL

The Authority — Hill International Consultant — Main Contractor — Structural Designer

KEY PLAN:

SCALE	SHOPDRAWING	DATE
AS SHOWN		11/20/2022

REV	DATE	DSG.	CHK.	APP.	AMENDMENTS	STATUS
A	11/20/2022	M.KH	M.KH	DR.M.M	ISSUED FOR INFORMATION	IFI

DRAWING TITLE

6TH OF OCTOBER MONORAIL
SERVICE WALKWAYS
ZONE (1008)
W335

Project Code	Rubric	Initiator	Lot	Ref	Number	Revision
93	M047	ACC60	DEP	DWG	0896	1 A

Tekla structures

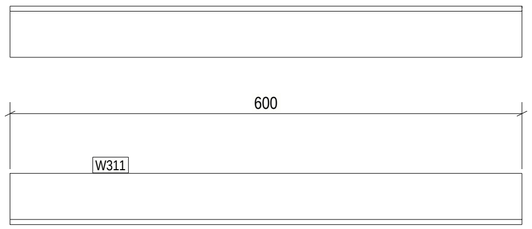

No. 1, Marked W311

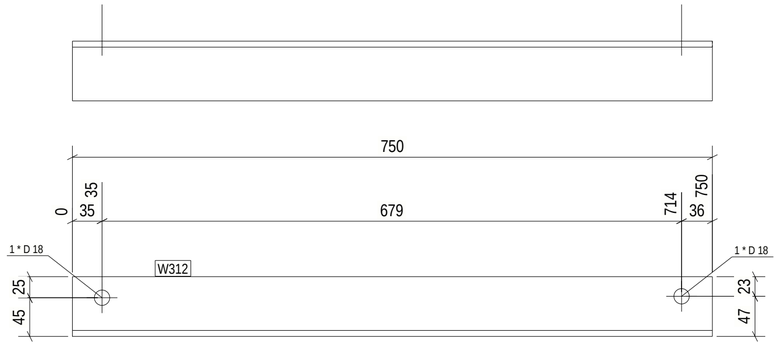

No. 1, Marked W312

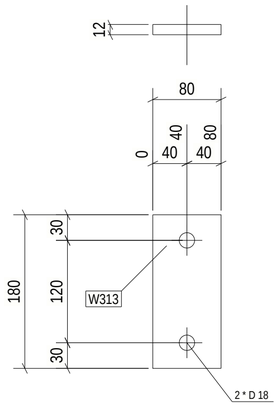

No. 10, Marked W313

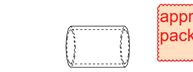

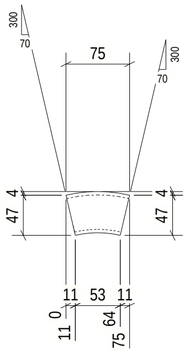

No. 24, Marked W314

approval is subject to approval of coordination package between multi-discipline

REVIEWED WITH COMMENT MONORAILS PROJECT

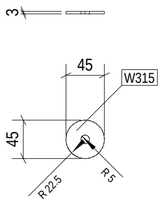

No. 22, Marked W315

No. 2, Marked W333

Length & Area & Weight per piece						
W311	L60*6	S235JR	1	600.0	0.15	3.2
Length & Area & Weight per piece						
W312	L70*7	S235JR	1	750.0	0.21	5.5
Length & Area & Weight per piece						
W313	PL12*80	S355JR	10	180.0	0.04	1.4
Length & Area & Weight per piece						
W314	CHS48.3*4.0	S235JR	24	64.2	0.01	0.3
Length & Area & Weight per piece						
W315	PL3*45	S355JR	22	45.0	0.00	0.0
Length & Area & Weight per piece						
W316	PL25*300	S355JR	2	300.0	0.21	17.7
Length & Area & Weight per piece						
W317	PL12*80	S355JR	18	180.0	0.04	1.4
Length & Area & Weight per piece						
W333	UPN160	S235JR	2	592.0	0.33	11.2
Mark	Profile	Grade	QTY	Length	Area	Weight

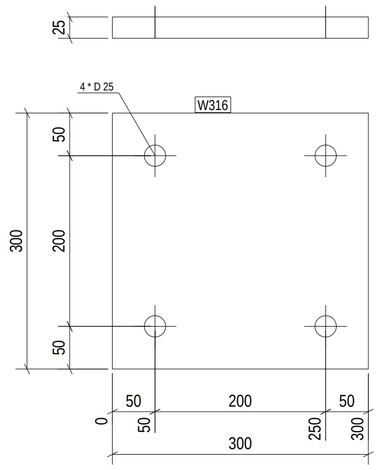

No. 2, Marked W316

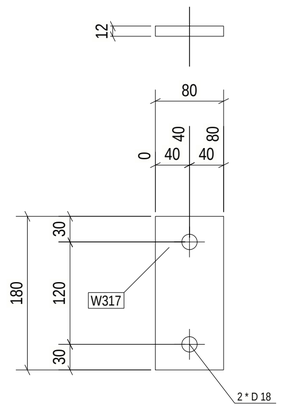

No. 18, Marked W317

2 REQ'D AS DRAWN MK'D W333
18 REQ'D AS DRAWN MK'D W317
2 REQ'D AS DRAWN MK'D W316
22 REQ'D AS DRAWN MK'D W315
24 REQ'D AS DRAWN MK'D W314
10 REQ'D AS DRAWN MK'D W313
1 REQ'D AS DRAWN MK'D W312
1 REQ'D AS DRAWN MK'D W311

GENERAL NOTES:

1. THE DIMENSIONS SHOWN ARE NOMINAL (IN MILLIMETERS), U.N.O.
2. WELD SIZESHALL BE AISC MINIMUM OF 6 mm UNLESS NOTED OTHERWISE.
3. ALL FIELD WELDS SHALL BE INSPECTED PER QUALITY ASSURANCE AND SPECIAL INSPECTIONS.

REFERENCE DRAWINGS

1	93M-BOA-NAT-LOT-04833
2	93M-BOA-NAT-LOT-09170
3	93M-BOA-NAT-LOT-01976
4	
5	
6	
7	
8	
9	

6TH OF OCTOBER CITY RAIL TRANSIT MONORAIL

The Authority — Hill International (Consultant) — Main Contractor — Structural Designer

KEY PLAN:

SCALE	SHOPDRAWING	DATE
AS SHOWN		12/20/2022

REV	DATE	DSG.	CHK.	APP.	AMENDMENTS	STATUS
A	11/20/2022	M.KH	M.KH	DR.M.M	ISSUED FOR INFORMATION	IFI

6 October Monorail
Engineering Unit
Valid For Construction

DRAWING TITLE

6TH OF OCTOBER MONORAIL
SERVICE WALKWAYS
ZONE (1008)
W311

Project Code	Rubric	Initiator	Lot	Ref	Number	Revision
93M	047	6ACC	60DE	PDWG	0896	2 A

Tekla structures

Length & Area & Weight per piece						
W307	UPN220	S235JR	1	1973.9	1.42	58.0
Length & Area & Weight per piece						
W308	UPN220	S235JR	1	751.5	0.54	22.1
Length & Area & Weight per piece						
W309	UPN220	S235JR	1	600.0	0.43	17.6
Length & Area & Weight per piece						
W310	L70*7	S235JR	1	750.0	0.21	5.5
Mark	Profile	Grade	QTY	Length	Area	Weight

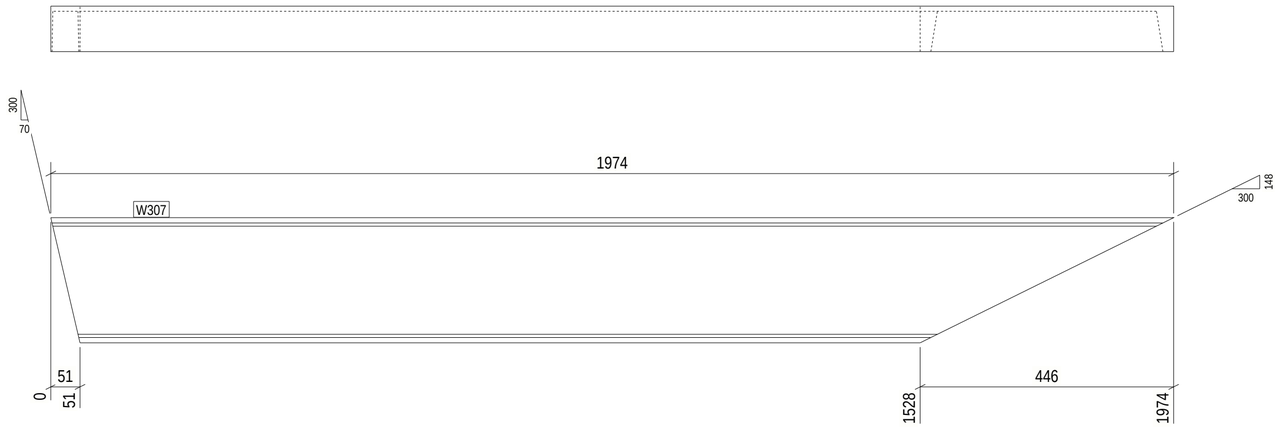

No. 1, Marked W307

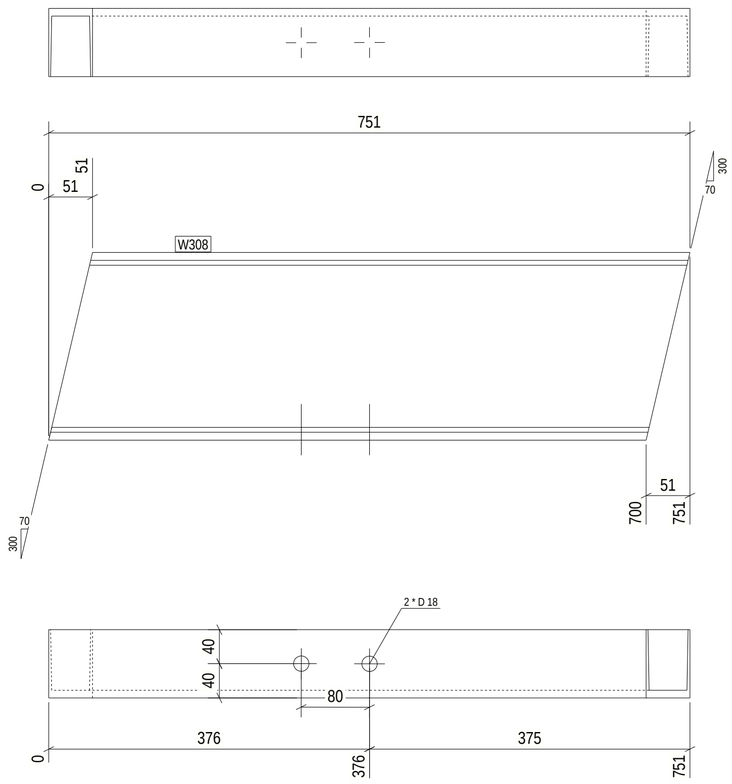

No. 1, Marked W308

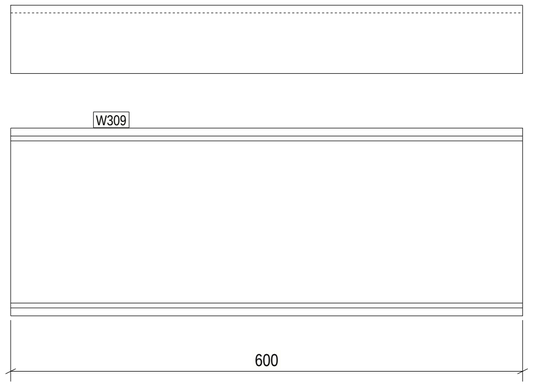

No. 1, Marked W309

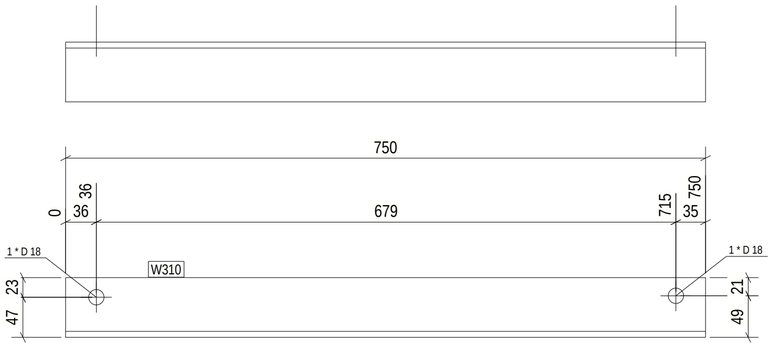

No. 1, Marked W310

approval is subject to approval of coordination package between multi-discipline

REVIEWED WITH COMMENT
MONORAILS PROJECT

1 REQ'D AS DRAWN MK'D W310
1 REQ'D AS DRAWN MK'D W309
1 REQ'D AS DRAWN MK'D W308
1 REQ'D AS DRAWN MK'D W307

GENERAL NOTES:

1. THE DIMENSIONS SHOWN ARE NOMINAL (IN MILLIMETERS), U.N.O.
2. WELD SIZESHALL BE AISC MINIMUM OF 6 mm UNLESS NOTED OTHERWISE.
3. ALL FIELD WELDS SHALL BE INSPECTED PER QUALITY ASSURANCE AND SPECIAL INSPECTIONS.

REFERENCE DRAWINGS

1	93M-BOA-NAT-LOT-04833
2	93M-BOA-NAT-LOT-09170
3	93M-BOA-NAT-LOT-01976
4	
5	
6	
7	
8	
9	

6TH OF OCTOBER CITY RAIL TRANSIT MONORAIL

The Authority | Consultant: Hill International | Main Contractor: ORASCOM CONSTRUCTION, BOMBARDIER | Structural Designer: INNOVA TRANSPORTATION

KEY PLAN:

6 October Monorail
Engineering Unit
Valid For Construction

SCALE	SHOPDRAWING	DATE
AS SHOWN		12/20/2022

DRAWING TITLE

6TH OF OCTOBER MONORAIL
SERVICE WALKWAYS
ZONE (1008)
W307

REV	DATE	DSG.	CHK.	APP.	AMENDMENTS	STATUS
A	11/20/2022	M.KH	M.KH	DR.M.M	ISSUED FOR INFORMATION	IFI

Project Code	Rubric	Initiator	Lot	Ref	Number	Revision
93	M047	ACC	60DEP	DWG	0896	3	A

Tekla structures

approval is subject to approval of coordination package between multi-discipline

REVIEWED WITH COMMENT
MONORAILS PROJECT

Length & Area & Weight per piece						
W302	PL10*25	S355JR	5	79.1	0.01	0.1
Length & Area & Weight per piece						
W303	CHS48.3*4.0	S235JR	1	297.0	0.04	1.3
Length & Area & Weight per piece						
W304	PL5*80	S355JR	2	157.4	0.02	0.3
Length & Area & Weight per piece						
W305	L70*7	S235JR	4	64.0	0.02	0.5
Length & Area & Weight per piece						
W306	UPN220	S235JR	1	4035.9	2.91	118.5
Mark	Profile	Grade	QTY	Length	Area	Weight

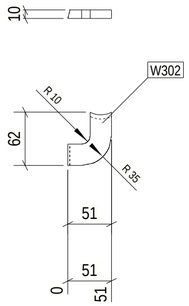

No. 5, Marked W302

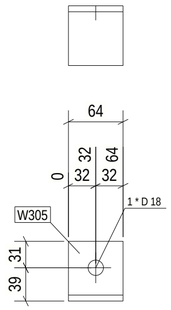

No. 4, Marked W305

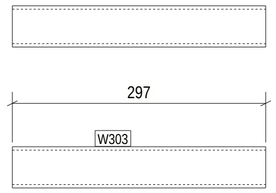

No. 1, Marked W303

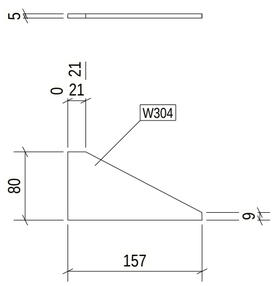

No. 2, Marked W304

No. 1, Marked W306

1 REQ'D AS DRAWN MK'D W306
4 REQ'D AS DRAWN MK'D W305
2 REQ'D AS DRAWN MK'D W304
1 REQ'D AS DRAWN MK'D W303
5 REQ'D AS DRAWN MK'D W302

6 October Monorail
Engineering Unit
Valid For Construction

GENERAL NOTES:

1. THE DIMENSIONS SHOWN ARE NOMINAL (IN MILLIMETERS), U.N.O.
2. WELD SIZESHALL BE AISC MINIMUM OF 6 mm UNLESS NOTED OTHERWISE.
3. ALL FIELD WELDS SHALL BE INSPECTED PER QUALITY ASSURANCE AND SPECIAL INSPECTIONS.

REFERENCE DRAWINGS

1	93M-BOA-NAT-LOT-04833
2	93M-BOA-NAT-LOT-09170
3	93M-BOA-NAT-LOT-01976
4	
5	
6	
7	
8	
9	

6TH OF OCTOBER CITY RAIL TRANSIT MONORAIL

The Authority — Hill International Consultant — Main Contractor — Structural Designer

KEY PLAN:

SCALE	SHOPDRAWING	DATE
AS SHOWN		11/20/2022

DRAWING TITLE
6TH OF OCTOBER MONORAIL
SERVICE WALKWAYS
ZONE (1008)
W302

REV	DATE	DSG.	CHK.	APP.	AMENDMENTS	STATUS
A	11/20/2022	M.KH	M.KH	DR.M.M	ISSUED FOR INFORMATION	IFI

Project Code	Rubric	Initiator	Lot	Ref	Number	Revision
93	M047	ACC60	DEP	DWG	08964	A

Tekla structures

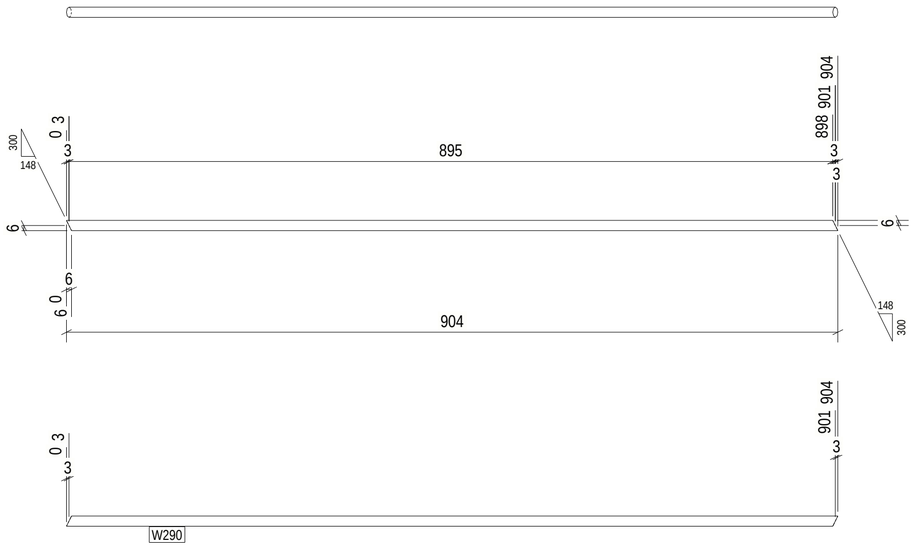

No. 61, Marked W290

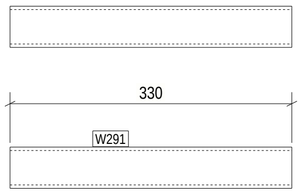

No. 3, Marked W291

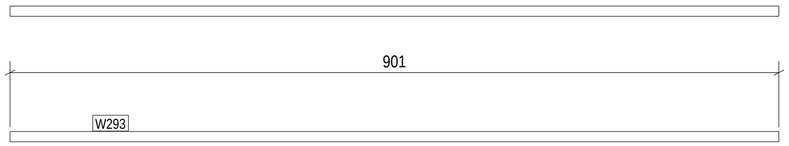

No. 35, Marked W293

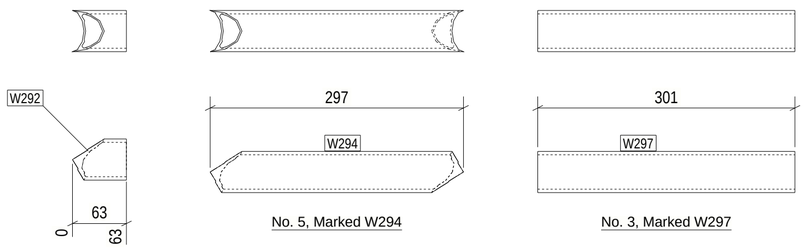

No. 1, Marked W292

No. 5, Marked W294

No. 3, Marked W297

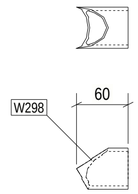

No. 1, Marked W298

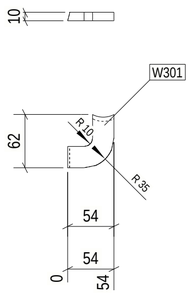

No. 1, Marked W301

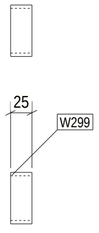

No. 32, Marked W299

approval is subject to approval of coordination package between multi-discipline

REVIEWED WITH COMMENT MONORAILS PROJECT

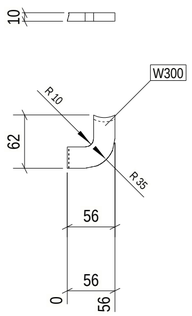

No. 2, Marked W300

Length & Area & Weight per piece						
W290	ROD12	S355JR	61	904.0	0.03	0.7
Length & Area & Weight per piece						
W291	CHS48.3*4.0	S235JR	3	330.3	0.05	1.4
Length & Area & Weight per piece						
W292	CHS48.3*4.0	S235JR	1	63.3	0.01	0.3
Length & Area & Weight per piece						
W293	ROD12	S355JR	35	901.1	0.03	0.7
Length & Area & Weight per piece						
W294	CHS48.3*4.0	S235JR	5	297.0	0.04	1.3
Length & Area & Weight per piece						
W295	CHS48.3*4.0	S235JR	1	701.5	0.11	3.1
Length & Area & Weight per piece						
W296	CHS48.3*4.0	S235JR	1	776.5	0.12	3.4
Length & Area & Weight per piece						
W297	CHS48.3*4.0	S235JR	3	301.4	0.05	1.3
Length & Area & Weight per piece						
W298	CHS48.3*4.0	S235JR	1	60.4	0.01	0.3
Length & Area & Weight per piece						
W299	PIPE2SCH40	S235JR	32	25.0	0.01	0.1

Length & Area & Weight per piece						
W300	PL10*25	S355JR	2	83.8	0.01	0.2
Length & Area & Weight per piece						
W301	PL10*25	S355JR	1	82.1	0.01	0.1
Mark	Profile	Grade	QTY	Length	Area	Weight

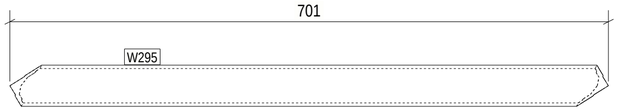

No. 1, Marked W295

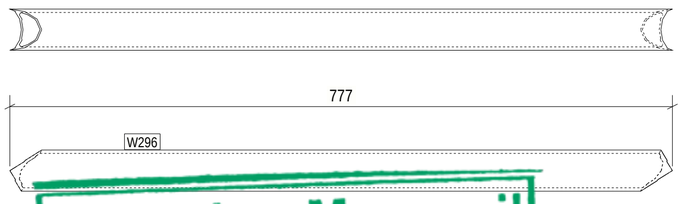

No. 1, Marked W296

1 REQ'D AS DRAWN MK'D W301
2 REQ'D AS DRAWN MK'D W300
32 REQ'D AS DRAWN MK'D W299
1 REQ'D AS DRAWN MK'D W298
3 REQ'D AS DRAWN MK'D W297
1 REQ'D AS DRAWN MK'D W296
1 REQ'D AS DRAWN MK'D W295
5 REQ'D AS DRAWN MK'D W294
35 REQ'D AS DRAWN MK'D W293
1 REQ'D AS DRAWN MK'D W292
3 REQ'D AS DRAWN MK'D W291
61 REQ'D AS DRAWN MK'D W290

6 October Monorail
Engineering Unit
Valid For Construction

GENERAL NOTES:

1. THE DIMENSIONS SHOWN ARE NOMINAL (IN MILLIMETERS), U.N.O.
2. WELD SIZESHALL BE AISC MINIMUM OF 6 mm UNLESS NOTED OTHERWISE.
3. ALL FIELD WELDS SHALL BE INSPECTED PER QUALITY ASSURANCE AND SPECIAL INSPECTIONS.

REFERENCE DRAWINGS

1	93M-BOA-NAT-LOT-04833
2	93M-BOA-NAT-LOT-09170
3	93M-BOA-NAT-LOT-01976
4	
5	
6	
7	
8	
9	

6TH OF OCTOBER CITY RAIL TRANSIT MONORAIL

The Authority | Consultant: Hill International | Main Contractor: Orascom Construction / Bombardier | Structural Designer: Innova Transportation

KEY PLAN:

SCALE: AS SHOWN | SHOPDRAWING | DATE: 11/20/2022

REV	DATE	DSG.	CHK.	APP.	AMENDMENTS	STATUS
A	11/20/2022	M.KH	M.KH	DR.M.M	ISSUED FOR INFORMATION	IFI

DRAWING TITLE

6TH OF OCTOBER MONORAIL
SERVICE WALKWAYS
ZONE (1008)
W290

Project Code	Rubric	Initiator	Lot	Ref	Number	Revision
93	M047	ACC60	DEP	DWG	08965	A

Tekla structures

approval is subject to approval of coordination package between multi-discipline

REVIEWED WITH COMMENT
MONORAILS PROJECT

Length & Area & Weight per piece						
W286	L50*5	S235JR	4	100.0	0.02	0.4
Length & Area & Weight per piece						
W287	ROD12	S355JR	126	901.1	0.03	0.7
Length & Area & Weight per piece						
W288	CHS48.3*4.0	S235JR	8	1046.5	0.16	4.6
Length & Area & Weight per piece						
W289	CHS48.3*4.0	S235JR	11	1111.1	0.17	4.9
Mark	Profile	Grade	QTY	Length	Area	Weight

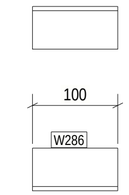

No. 4, Marked W286

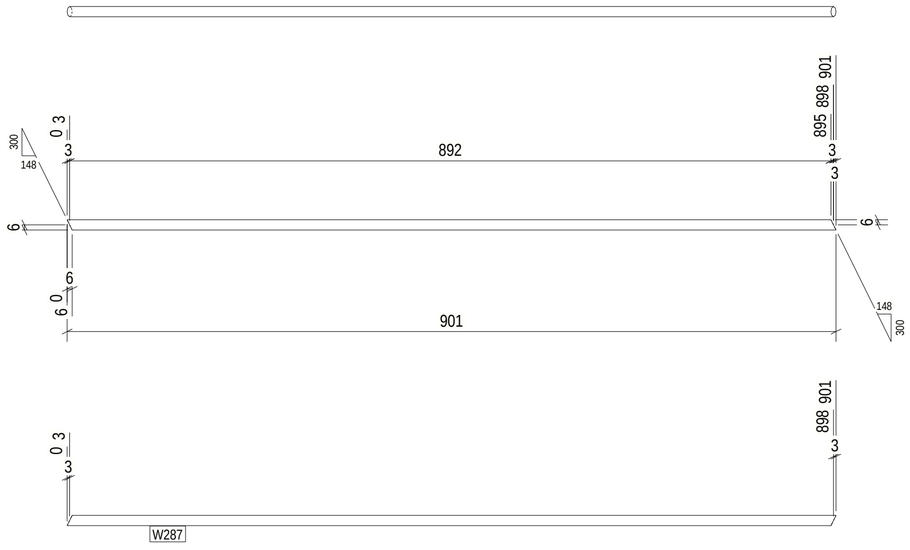

No. 126, Marked W287

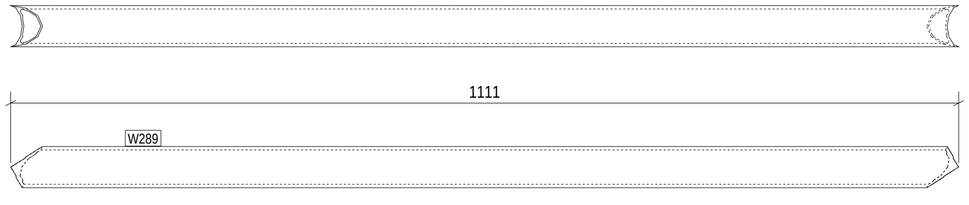

No. 11, Marked W289

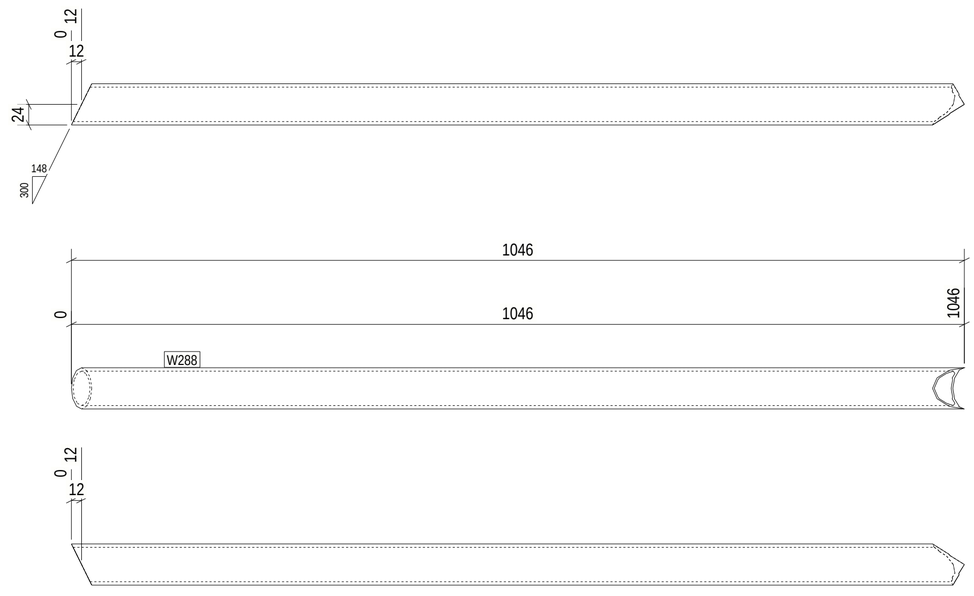

No. 8, Marked W288

11 REQ'D AS DRAWN MK'D W289
8 REQ'D AS DRAWN MK'D W288
126 REQ'D AS DRAWN MK'D W287
4 REQ'D AS DRAWN MK'D W286

GENERAL NOTES:

1. THE DIMENSIONS SHOWN ARE NOMINAL (IN MILLIMETERS), U.N.O.
2. WELD SIZESHALL BE AISC MINIMUM OF 6 mm UNLESS NOTED OTHERWISE.
3. ALL FIELD WELDS SHALL BE INSPECTED PER QUALITY ASSURANCE AND SPECIAL INSPECTIONS.

REFERENCE DRAWINGS

1	93M-BOA-NAT-LOT-04833
2	93M-BOA-NAT-LOT-09170
3	93M-BOA-NAT-LOT-01976
4	
5	
6	
7	
8	
9	

6TH OF OCTOBER CITY RAIL TRANSIT MONORAIL

The Authority | Consultant: Hill International | Main Contractor: ORASCOM CONSTRUCTION / BOMBARDIER | Structural Designer: INNOVA TRANSPORTATION

KEY PLAN:

6 October Monorail
Engineering Unit
Valid For Construction

SCALE	SHOPDRAWING	DATE
AS SHOWN		12/20/2022

DRAWING TITLE
6TH OF OCTOBER MONORAIL
SERVICE WALKWAYS
ZONE (1008)
W286

REV	DATE	DSG.	CHK.	APP.	AMENDMENTS	STATUS
A	11/20/2022	M.KH	M.KH	DR.M.M	ISSUED FOR INFORMATION	IFI

Project Code	Rubric	Initiator	Lot	Ref	Number	Revision
93	M047	ACC	60DEP	DWG	08966	A

Tekla structures

approval is subject to approval of coordination package between multi-discipline

REVIEWED WITH COMMENT
MONORAILS PROJECT

Length & Area & Weight per piece						
W280	CHQD_PL5*540	S235JR	1	590.0	0.65	12.5
Length & Area & Weight per piece						
W281	CHQD_PL5*470	S235JR	14	590.0	0.56	10.9
Length & Area & Weight per piece						
W282	L50*5	S235JR	80	200.0	0.04	0.7
Length & Area & Weight per piece						
W283	CHQD_PL5*590	S235JR	1	662.9	0.79	15.1
Length & Area & Weight per piece						
W284	CHQD_PL5*469.8	S235JR	1	590.0	0.56	10.8
Length & Area & Weight per piece						
W285	CHQD_PL5*393	S235JR	1	590.0	0.47	9.1
Mark	Profile	Grade	QTY	Length	Area	Weight

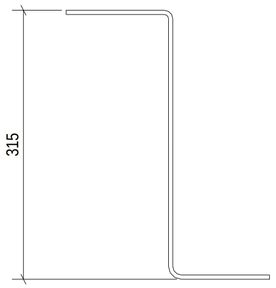

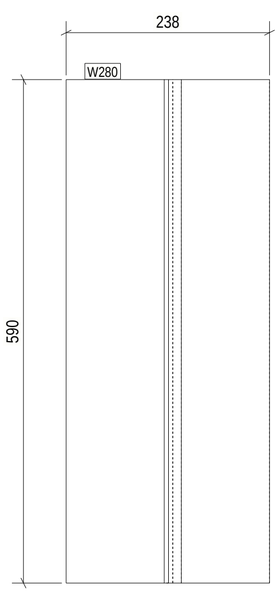

No. 1, Marked W280

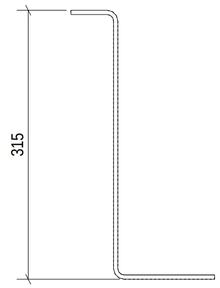

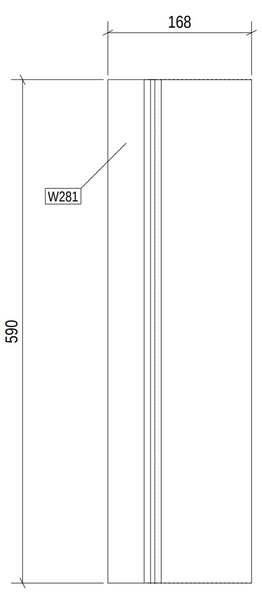

No. 14, Marked W281

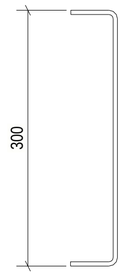

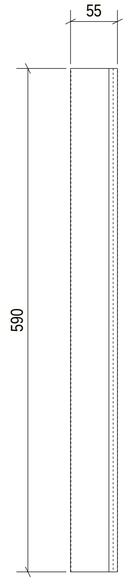

No. 1, Marked W285

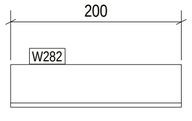

No. 80, Marked W282

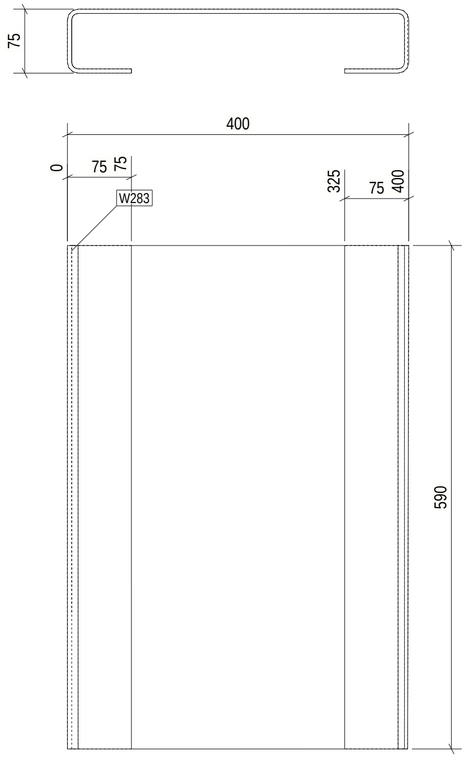

No. 1, Marked W283

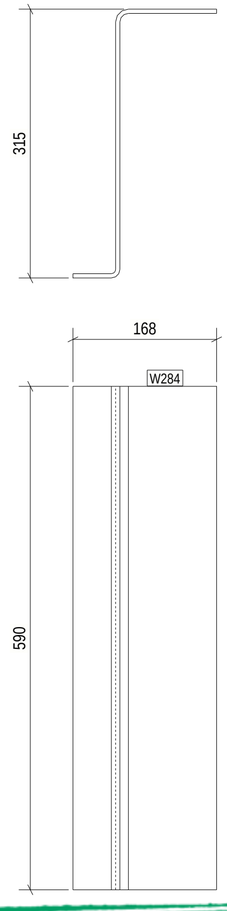

No. 1, Marked W284

1 REQ'D AS DRAWN MK'D W285
1 REQ'D AS DRAWN MK'D W284
1 REQ'D AS DRAWN MK'D W283
80 REQ'D AS DRAWN MK'D W282
14 REQ'D AS DRAWN MK'D W281
1 REQ'D AS DRAWN MK'D W280

6 October Monorail
Engineering Unit
Valid For Construction

GENERAL NOTES:

1. THE DIMENSIONS SHOWN ARE NOMINAL (IN MILLIMETERS), U.N.O.
2. WELD SIZESHALL BE AISC MINIMUM OF 6 mm UNLESS NOTED OTHERWISE.
3. ALL FIELD WELDS SHALL BE INSPECTED PER QUALITY ASSURANCE AND SPECIAL INSPECTIONS.

REFERENCE DRAWINGS

1	93M-BOA-NAT-LOT-04833
2	93M-BOA-NAT-LOT-09170
3	93M-BOA-NAT-LOT-01976
4	
5	
6	
7	
8	
9	

6TH OF OCTOBER CITY RAIL TRANSIT MONORAIL

The Authority | Hill International Consultant | Main Contractor | Structural Designer

KEY PLAN:

SCALE: AS SHOWN | SHOPDRAWING | DATE: 17/09/2012

REV	DATE	DSG.	CHK.	APP.	AMENDMENTS	STATUS
A	11/20/2022	M.KH	M.KH	DR.M.M	ISSUED FOR INFORMATION	IFI

DRAWING TITLE

6TH OF OCTOBER MONORAIL
SERVICE WALKWAYS
ZONE (1008)
W280

Project Code	Rubric	Initiator	Lot	Ref	Number	Revision
93	M047	6ACC	60DE	PDWG	0896	7 A

Tekla structures

approval is subject to approval of coordination package between multi-discipline

REVIEWED WITH COMMENT
MONORAILS PROJECT

Length & Area & Weight per piece						
W278	UPN220	S235JR	1	1973.9	1.42	58.0
Length & Area & Weight per piece						
W279	UPN220	S235JR	1	751.4	0.54	22.1
Mark	Profile	Grade	QTY	Length	Area	Weight

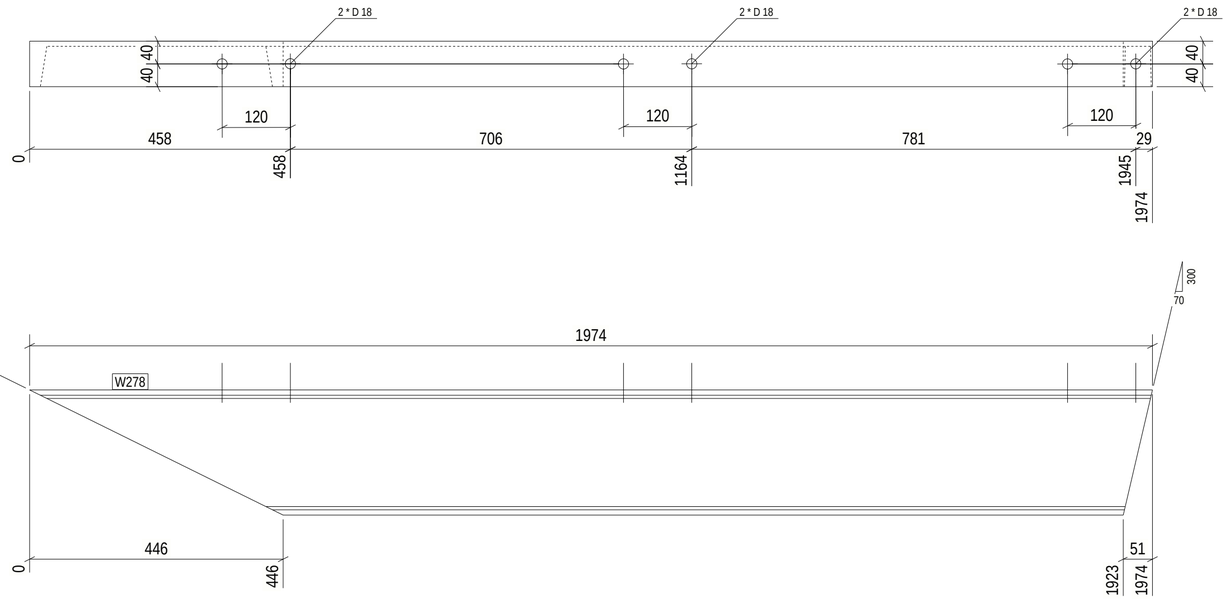

No. 1, Marked W278

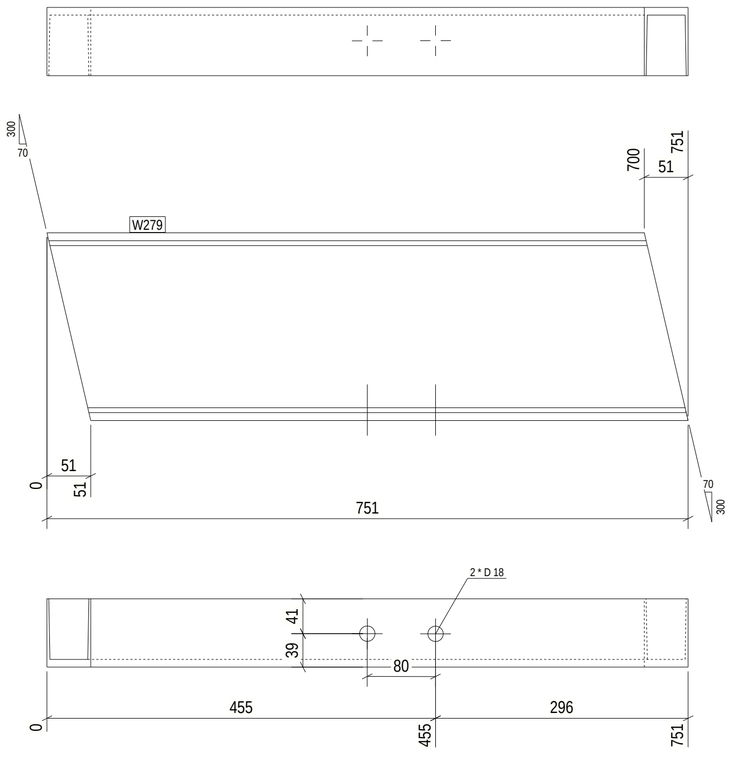

No. 1, Marked W279

1 REQ'D AS DRAWN MK'D W279
1 REQ'D AS DRAWN MK'D W278

6 October Monorail
Engineering Unit
Valid For Construction

GENERAL NOTES:

1. THE DIMENSIONS SHOWN ARE NOMINAL (IN MILLIMETERS), U.N.O.
2. WELD SIZESHALL BE AISC MINIMUM OF 6 mm UNLESS NOTED OTHERWISE.
3. ALL FIELD WELDS SHALL BE INSPECTED PER QUALITY ASSURANCE AND SPECIAL INSPECTIONS.

REFERENCE DRAWINGS

1	93M-BOA-NAT-LOT-04833
2	93M-BOA-NAT-LOT-09170
3	93M-BOA-NAT-LOT-01976
4	
5	
6	
7	
8	
9	

6TH OF OCTOBER CITY RAIL TRANSIT MONORAIL

The Authority — Hill International (Consultant) — Main Contractor — Structural Designer

KEY PLAN:

SCALE	SHOPDRAWING	DATE
AS SHOWN		12/20/2022

REV	DATE	DSG.	CHK.	APP.	AMENDMENTS	STATUS
A	11/20/2022	M.KH	M.KH	DR.M.M	ISSUED FOR INFORMATION	IFI

DRAWING TITLE

6TH OF OCTOBER MONORAIL
SERVICE WALKWAYS
ZONE (1008)
W278

Project Code	Rubric	Initiator	Lot	Ref	Number	Revision
93M	0476	ACC	60DEP	DWG	08968	A

Tekla structures

Mark	Profile	Grade	QTY	Length	Area	Weight
Length & Area & Weight per piece						
W158	PL10*155.2	S355JR	2	191.3	0.05	1.7
Length & Area & Weight per piece						
W159	ROD32	S235JR	77	100.0	0.01	0.6
Length & Area & Weight per piece						
W267	PL10*155.9	S355JR	3	169.4	0.04	1.5
Length & Area & Weight per piece						
W268	PL10*155.9	S355JR	4	164.2	0.04	1.5
Length & Area & Weight per piece						
W269	PL10*155.9	S355JR	6	171.4	0.04	1.5
Length & Area & Weight per piece						
W275	UPN160	S235JR	1	591.0	0.33	11.1
Length & Area & Weight per piece						
W276	UPN140	S235JR	1	600.0	0.29	9.6
Length & Area & Weight per piece						
W277	CHQD_PL5*182.5	S235JR	1	590.0	0.22	4.2

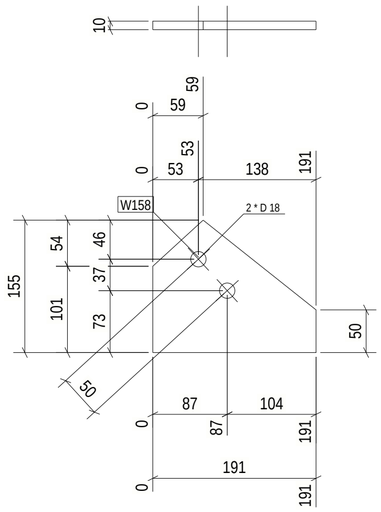

No. 2, Marked W158

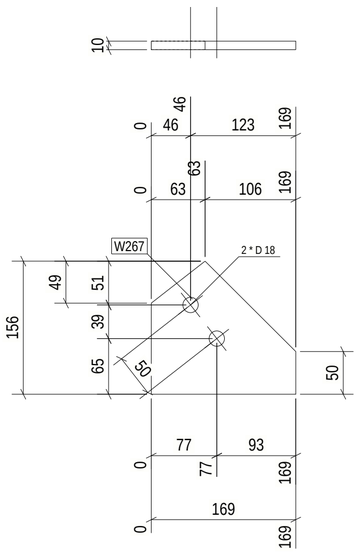

No. 3, Marked W267

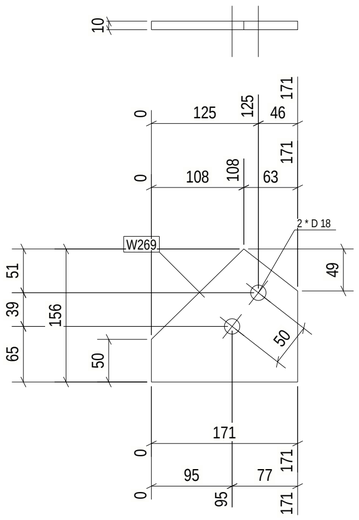

No. 6, Marked W269

approval is subject to approval of coordination package between multi-discipline

REVIEWED WITH COMMENT MONORAILS PROJECT

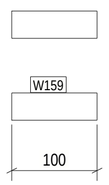

No. 77, Marked W159

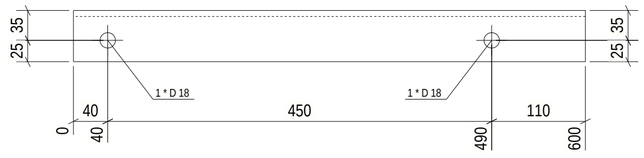

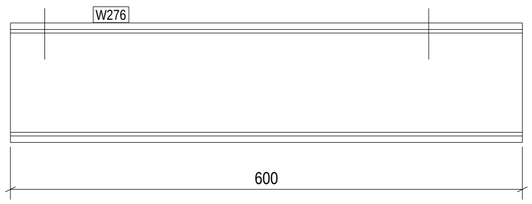

No. 1, Marked W276

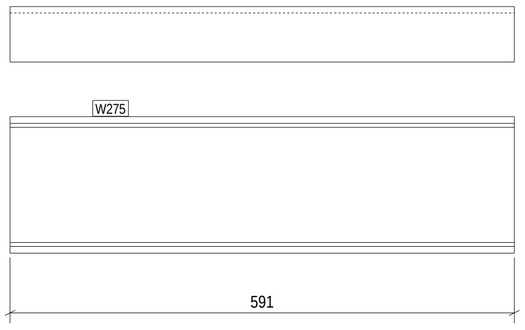

No. 1, Marked W275

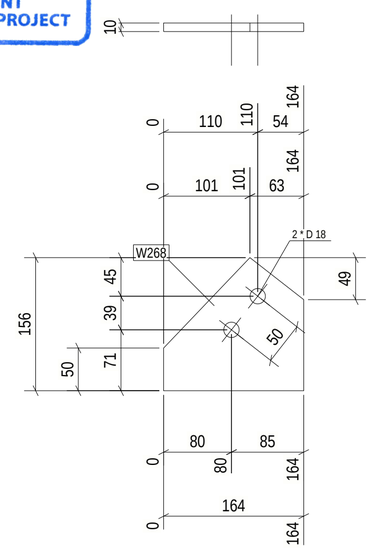

No. 4, Marked W268

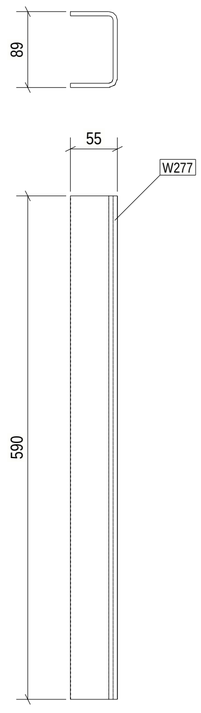

No. 1, Marked W277

1 REQ'D AS DRAWN MK'D W277
1 REQ'D AS DRAWN MK'D W276
1 REQ'D AS DRAWN MK'D W275
6 REQ'D AS DRAWN MK'D W269
4 REQ'D AS DRAWN MK'D W268
3 REQ'D AS DRAWN MK'D W267
77 REQ'D AS DRAWN MK'D W159
2 REQ'D AS DRAWN MK'D W158

6 October Monorail Engineering Unit
Valid For Construction

GENERAL NOTES:

1. THE DIMENSIONS SHOWN ARE NOMINAL (IN MILLIMETERS), U.N.O.
2. WELD SIZESHALL BE AISC MINIMUM OF 6 mm UNLESS NOTED OTHERWISE.
3. ALL FIELD WELDS SHALL BE INSPECTED PER QUALITY ASSURANCE AND SPECIAL INSPECTIONS.

REFERENCE DRAWINGS

1	93M-BOA-NAT-LOT-04833
2	93M-BOA-NAT-LOT-09170
3	93M-BOA-NAT-LOT-01976
4	
5	
6	
7	
8	
9	

6TH OF OCTOBER CITY RAIL TRANSIT MONORAIL

The Authority | Hill International Consultant | ORASCOM BOMBARDIER Main Contractor | INNOVA Structural Designer

KEY PLAN:

SCALE	SHOPDRAWING	DATE
AS SHOWN		11/20/2022

REV	DATE	DSG.	CHK.	APP.	AMENDMENTS	STATUS
A	11/20/2022	M.KH	M.KH	DR.M.M	ISSUED FOR INFORMATION	IFI

DRAWING TITLE

6TH OF OCTOBER MONORAIL SERVICE WALKWAYS ZONE (1008) W158

Project Code	Rubric	Initiator	Lot	Ref	Number	Revision
9 3 M	0 4 7 6	A C C	6 0 D E P	D W G	0 8 9 6 9	A

Tekla structures

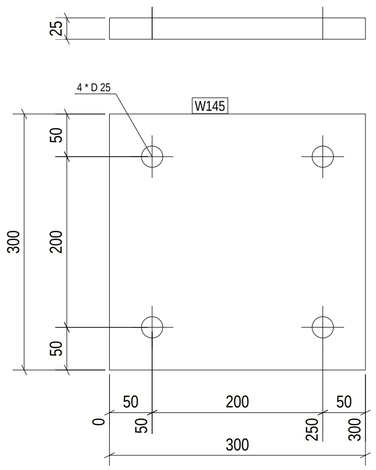

No. 1, Marked W145

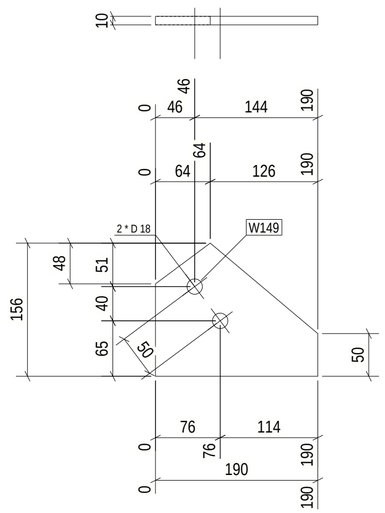

No. 2, Marked W149

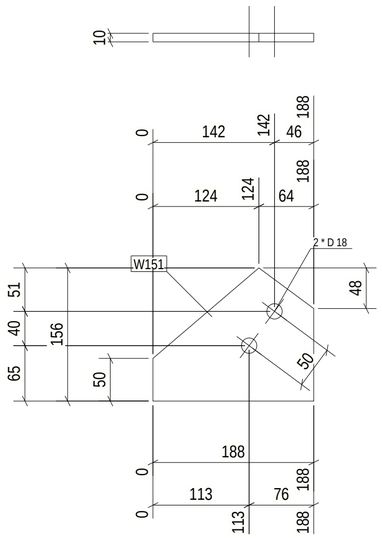

No. 2, Marked W151

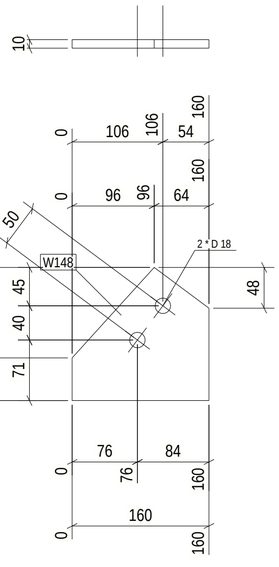

No. 4, Marked W148

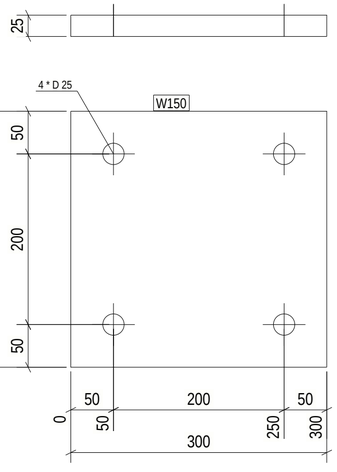

No. 35, Marked W150

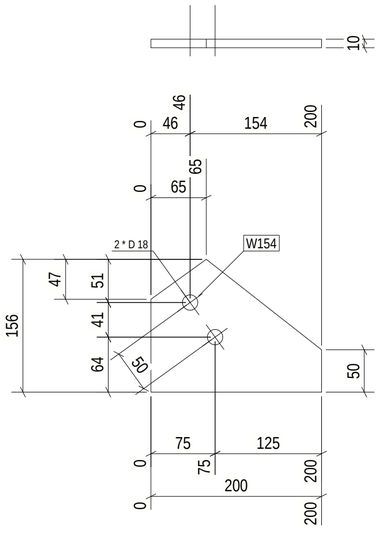

No. 1, Marked W154

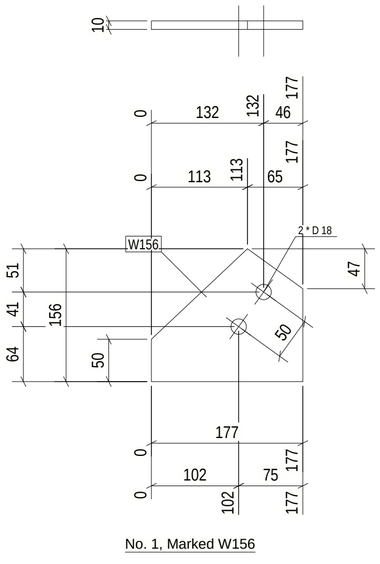

No. 1, Marked W156

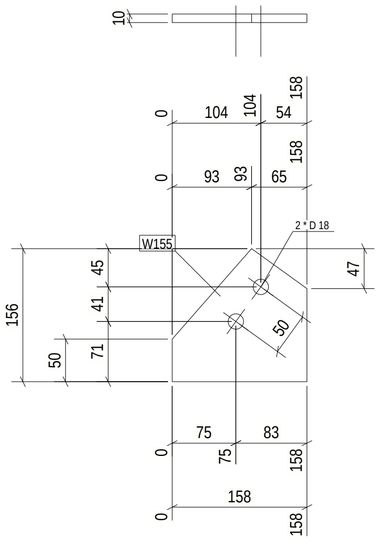

No. 2, Marked W155

approval is subject to approval of coordination package between multi-discipline

REVIEWED WITH COMMENT
MONORAILS PROJECT

Length & Area & Weight per piece						
W145	PL25*300	S355JR	1	300.0	0.21	17.7
Length & Area & Weight per piece						
W148	PL10*156	S355JR	4	160.4	0.04	1.4
Length & Area & Weight per piece						
W149	PL10*156	S355JR	2	190.3	0.05	1.7
Length & Area & Weight per piece						
W150	PL25*300	S355JR	35	300.0	0.21	17.7
Length & Area & Weight per piece						
W151	PL10*156	S355JR	2	188.5	0.05	1.7
Length & Area & Weight per piece						
W154	PL10*155.7	S355JR	1	200.0	0.05	1.8
Length & Area & Weight per piece						
W155	PL10*155.9	S355JR	2	157.9	0.04	1.4
Length & Area & Weight per piece						
W156	PL10*155.7	S355JR	1	177.5	0.05	1.6
Mark	Profile	Grade	QTY	Length	Area	Weight

1 REQ'D AS DRAWN MK'D W156
2 REQ'D AS DRAWN MK'D W155
1 REQ'D AS DRAWN MK'D W154
2 REQ'D AS DRAWN MK'D W151
35 REQ'D AS DRAWN MK'D W150
2 REQ'D AS DRAWN MK'D W149
4 REQ'D AS DRAWN MK'D W148
1 REQ'D AS DRAWN MK'D W145

GENERAL NOTES:

1. THE DIMENSIONS SHOWN ARE NOMINAL (IN MILLIMETERS), U.N.O.
2. WELD SIZESHALL BE AISC MINIMUM OF 6 mm UNLESS NOTED OTHERWISE.
3. ALL FIELD WELDS SHALL BE INSPECTED PER QUALITY ASSURANCE AND SPECIAL INSPECTIONS.

REFERENCE DRAWINGS

1	93M-BOA-NAT-LOT-04833
2	93M-BOA-NAT-LOT-09170
3	93M-BOA-NAT-LOT-01976
4	
5	
6	
7	
8	
9	

6TH OF OCTOBER CITY RAIL TRANSIT MONORAIL

The Authority | Consultant: Hill International | Main Contractor: ORASCOM CONSTRUCTION / BOMBARDIER | Structural Designer: INNOVA TRANSPORTATION

KEY PLAN:

6 October Monorail
Engineering Unit
Valid For Construction

SCALE	SHOPDRAWING	DATE
AS SHOWN		12/20/2022

REV	DATE	DSG.	CHK.	APP.	AMENDMENTS	STATUS
A	11/20/2022	M.KH	M.KH	DR.M.M	ISSUED FOR INFORMATION	IFI

DRAWING TITLE

6TH OF OCTOBER MONORAIL
SERVICE WALKWAYS
ZONE (1008)
W150

Project Code	Rubric	Initiator	Lot	Ref	Number	Revision
9 3 M	0 4 7 6	A C C	6 0 D E P	D W G	0 8 9 7 0	A

Tekla structures

Mark	Profile	Grade	QTY	Length	Area	Weight
Length & Area & Weight per piece						
W138	PL25*300	S355JR	1	300.0	0.21	17.7
Length & Area & Weight per piece						
W139	PL25*300	S355JR	1	300.0	0.21	17.7
Length & Area & Weight per piece						
W140	L70*7	S235JR	1	825.0	0.23	6.0
Length & Area & Weight per piece						
W141	PL8*155.4	S355JR	14	310.0	0.08	2.3
Length & Area & Weight per piece						
W142	PL8*159.7	S355JR	14	332.3	0.07	2.0
Length & Area & Weight per piece						
W143	PL25*300	S355JR	13	300.0	0.21	17.7
Length & Area & Weight per piece						
W144	PL25*300	S355JR	1	300.0	0.21	17.7

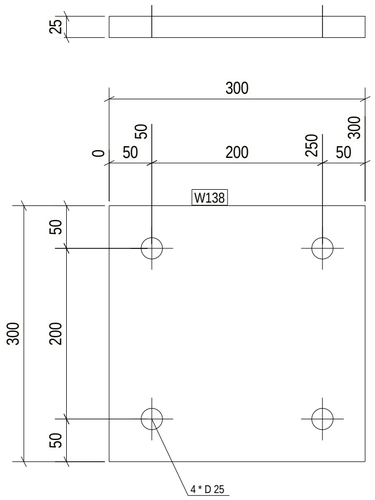

No. 1, Marked W138

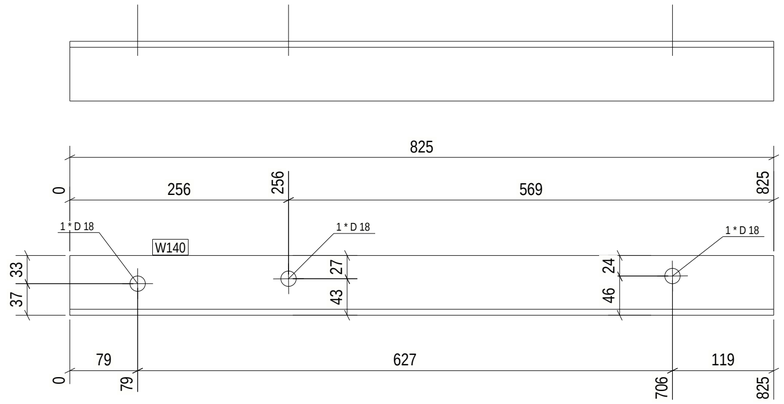

No. 1, Marked W140

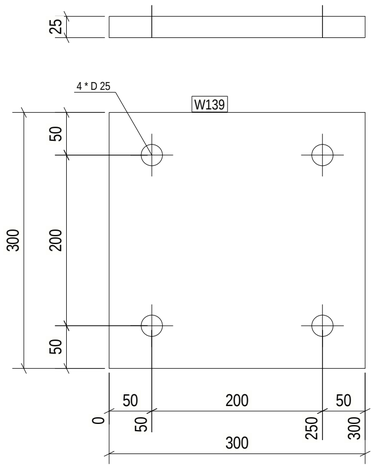

No. 1, Marked W139

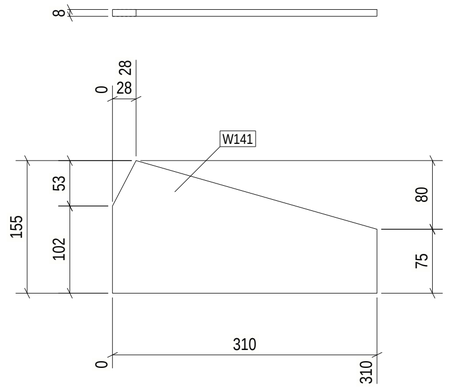

No. 14, Marked W141

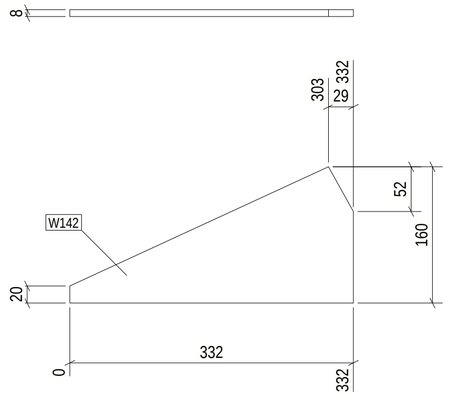

No. 14, Marked W142

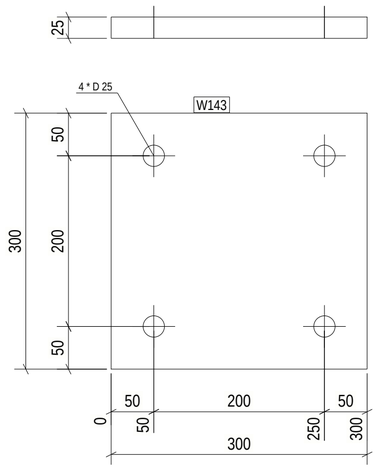

No. 13, Marked W143

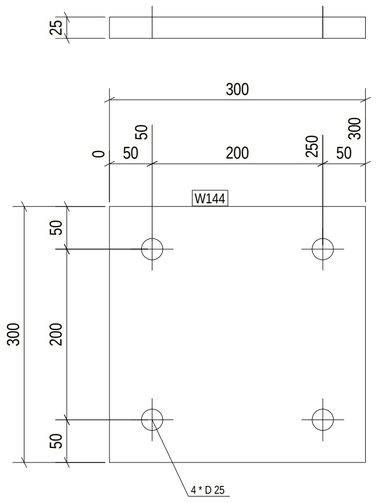

No. 1, Marked W144

approval is subject to approval of coordination package between multi-discipline

REVIEWED WITH COMMENT MONORAILS PROJECT

1 REQ'D AS DRAWN MK'D W144
13 REQ'D AS DRAWN MK'D W143
14 REQ'D AS DRAWN MK'D W142
14 REQ'D AS DRAWN MK'D W141
1 REQ'D AS DRAWN MK'D W140
1 REQ'D AS DRAWN MK'D W139
1 REQ'D AS DRAWN MK'D W138

6 October Monorail Engineering Unit
Valid For Construction

GENERAL NOTES:

1. THE DIMENSIONS SHOWN ARE NOMINAL (IN MILLIMETERS), U.N.O.
2. WELD SIZESHALL BE AISC MINIMUM OF 6 mm UNLESS NOTED OTHERWISE.
3. ALL FIELD WELDS SHALL BE INSPECTED PER QUALITY ASSURANCE AND SPECIAL INSPECTIONS.

REFERENCE DRAWINGS

1	93M-BOA-NAT-LOT-04833
2	93M-BOA-NAT-LOT-09170
3	93M-BOA-NAT-LOT-01976
4	
5	
6	
7	
8	
9	

6TH OF OCTOBER CITY RAIL TRANSIT MONORAIL

The Authority | Hill International Consultant | ORASCOM BOMBARDIER Main Contractor | INNOVA Structural Designer

KEY PLAN:

SCALE	SHOPDRAWING	DATE
AS SHOWN		11/20/2022

REV	DATE	DSG.	CHK.	APP.	AMENDMENTS	STATUS
A	11/20/2022	M.KH	M.KH	DR.M.M	ISSUED FOR INFORMATION	IFI

DRAWING TITLE

6TH OF OCTOBER MONORAIL SERVICE WALKWAYS ZONE (1008) W138

Project Code	Rubric	Initiator	Lot	Ref	Number	Revision
93M	0476	ACC	60DEP	DWG	08971	A

Tekla structures

Mark	Profile	Grade	QTY	Length	Area	Weight
Length & Area & Weight per piece						
W131	PL8*154.2	S355JR	51	330.2	0.07	1.9
Length & Area & Weight per piece						
W132	PL25*300	S355JR	1	300.0	0.21	17.7
Length & Area & Weight per piece						
W133	PL25*300	S355JR	1	300.0	0.21	17.7
Length & Area & Weight per piece						
W134	PL25*300	S355JR	1	300.0	0.21	17.7
Length & Area & Weight per piece						
W135	L70*7	S235JR	1	825.0	0.23	6.0
Length & Area & Weight per piece						
W136	PL25*300	S355JR	1	300.0	0.21	17.7
Length & Area & Weight per piece						
W137	PL25*300	S355JR	1	300.0	0.21	17.7

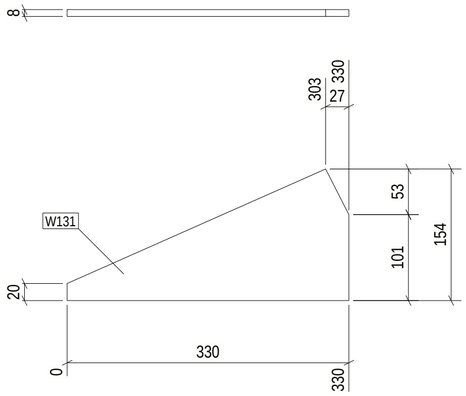

No. 51, Marked W131

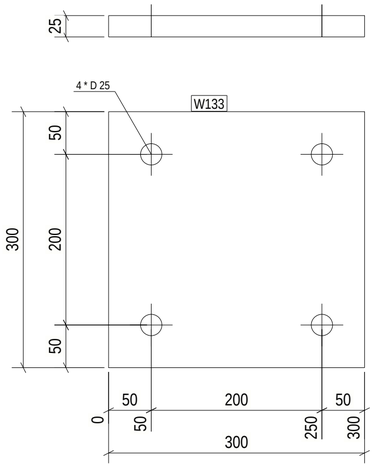

No. 1, Marked W133

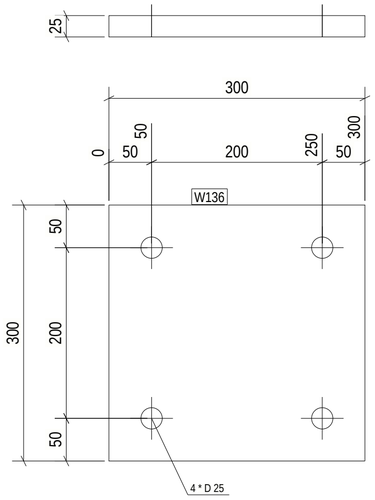

No. 1, Marked W136

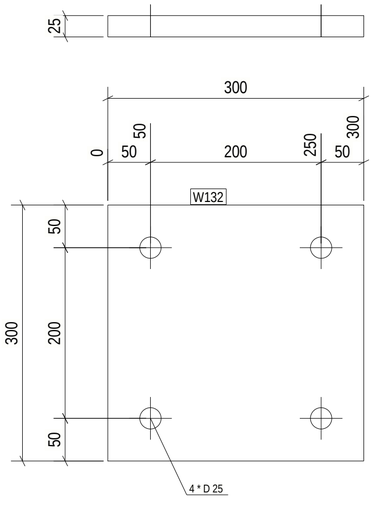

No. 1, Marked W132

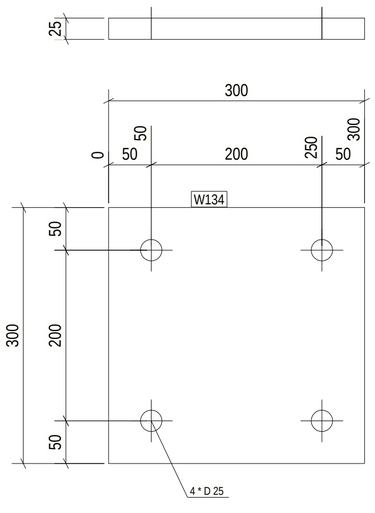

No. 1, Marked W134

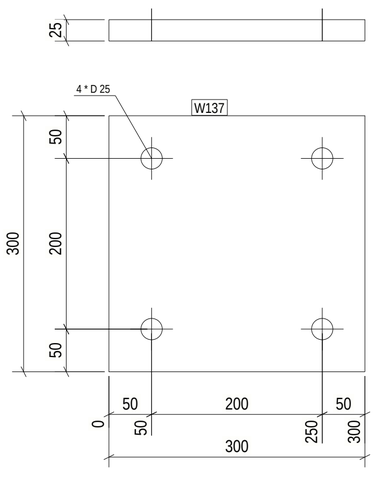

No. 1, Marked W137

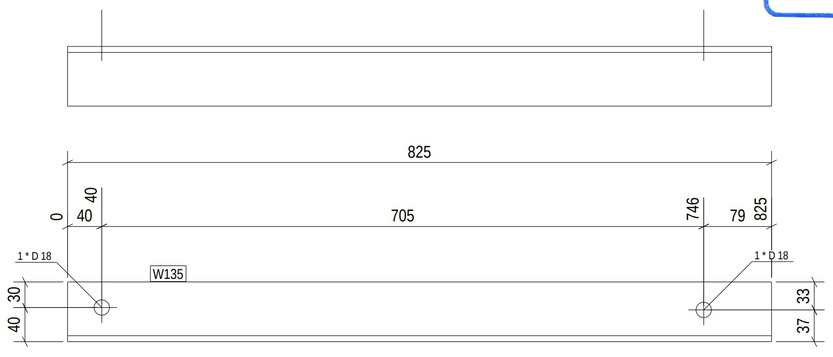

No. 1, Marked W135

approval is subject to approval of coordination package between multi-discipline

REVIEWED WITH COMMENT MONORAILS PROJECT

1 REQ'D AS DRAWN MK'D W137
1 REQ'D AS DRAWN MK'D W136
1 REQ'D AS DRAWN MK'D W135
1 REQ'D AS DRAWN MK'D W134
1 REQ'D AS DRAWN MK'D W133
1 REQ'D AS DRAWN MK'D W132
51 REQ'D AS DRAWN MK'D W131

6 October Monorail Engineering Unit
Valid For Construction

GENERAL NOTES:

1. THE DIMENSIONS SHOWN ARE NOMINAL (IN MILLIMETERS), U.N.O.
2. WELD SIZESHALL BE AISC MINIMUM OF 6 mm UNLESS NOTED OTHERWISE.
3. ALL FIELD WELDS SHALL BE INSPECTED PER QUALITY ASSURANCE AND SPECIAL INSPECTIONS.

REFERENCE DRAWINGS

1	93M-BOA-NAT-LOT-04833
2	93M-BOA-NAT-LOT-09170
3	93M-BOA-NAT-LOT-01976
4	
5	
6	
7	
8	
9	

6TH OF OCTOBER CITY RAIL TRANSIT MONORAIL

The Authority | Hill International Consultant | Main Contractor | Structural Designer

KEY PLAN:

SCALE	SHOPDRAWING	DATE
AS SHOWN		11/20/2022

REV	DATE	DSG.	CHK.	APP.	AMENDMENTS	STATUS
A	11/20/2022	M.KH	M.KH	DR.M.M	ISSUED FOR INFORMATION	IFI

DRAWING TITLE

6TH OF OCTOBER MONORAIL SERVICE WALKWAYS ZONE (1008)
W131

Project Code	Rubric	Initiator	Lot	Ref	Number	Revision
93M	0476	ACC	60DEP	DWG	08972	A

Tekla structures

approval is subject to approval of coordination package between multi-discipline

REVIEWED WITH COMMENT
MONORAILS PROJECT

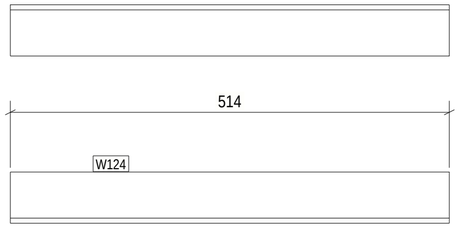

No. 28, Marked W124

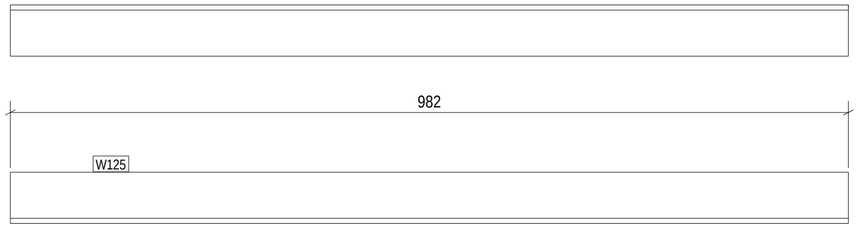

No. 28, Marked W125

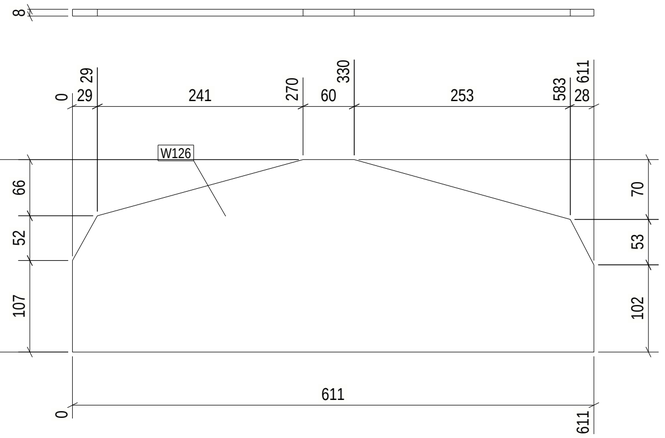

No. 28, Marked W126

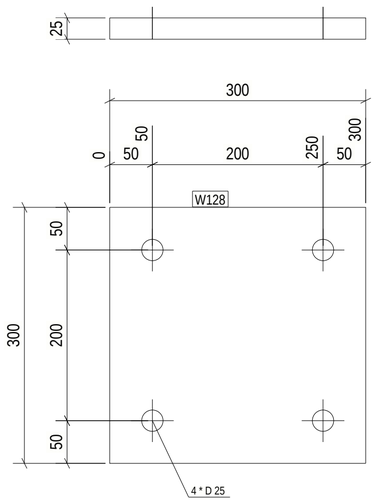

No. 1, Marked W128

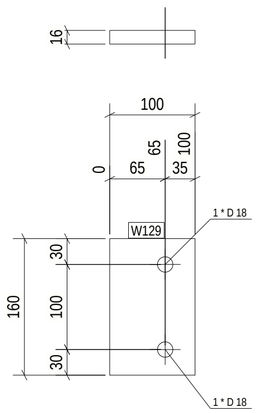

No. 52, Marked W129

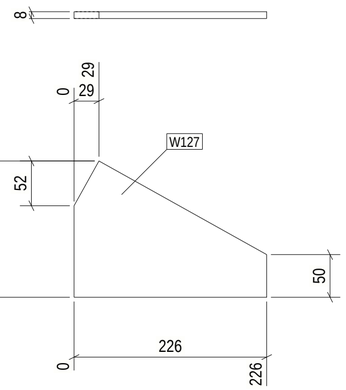

No. 14, Marked W127

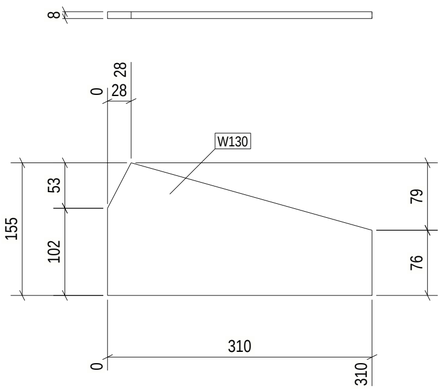

No. 51, Marked W130

Length & Area & Weight per piece						
W124	L60*6	S235JR	28	514.4	0.12	2.8
Length & Area & Weight per piece						
W125	L60*6	S235JR	28	982.1	0.24	5.3
Length & Area & Weight per piece						
W126	PL8*225.5	S355JR	28	611.1	0.24	7.3
Length & Area & Weight per piece						
W127	PL8*159.7	S355JR	14	225.7	0.05	1.5
Length & Area & Weight per piece						
W128	PL25*300	S355JR	1	300.0	0.21	17.7
Length & Area & Weight per piece						
W129	PL16*100	S355JR	52	160.0	0.04	2.0
Length & Area & Weight per piece						
W130	PL8*155.4	S355JR	51	310.0	0.08	2.3
Mark	Profile	Grade	QTY	Length	Area	Weight

51 REQ'D AS DRAWN MK'D W130
52 REQ'D AS DRAWN MK'D W129
1 REQ'D AS DRAWN MK'D W128
14 REQ'D AS DRAWN MK'D W127
28 REQ'D AS DRAWN MK'D W126
28 REQ'D AS DRAWN MK'D W125
28 REQ'D AS DRAWN MK'D W124

6 October Monorail
Engineering Unit
Valid For Construction

GENERAL NOTES:

1. THE DIMENSIONS SHOWN ARE NOMINAL (IN MILLIMETERS), U.N.O.
2. WELD SIZESHALL BE AISC MINIMUM OF 6 mm UNLESS NOTED OTHERWISE.
3. ALL FIELD WELDS SHALL BE INSPECTED PER QUALITY ASSURANCE AND SPECIAL INSPECTIONS.

REFERENCE DRAWINGS

1	93M-BOA-NAT-LOT-04833
2	93M-BOA-NAT-LOT-09170
3	93M-BOA-NAT-LOT-01976
4	
5	
6	
7	
8	
9	

6TH OF OCTOBER CITY RAIL TRANSIT MONORAIL

The Authority | Consultant: Hill International | Main Contractor: ORASCOM CONSTRUCTION, BOMBARDIER | Structural Designer: INNOVA TRANSPORTATION

KEY PLAN:

SCALE: AS SHOWN | SHOPDRAWING | DATE: 12/20/2022

DRAWING TITLE
6TH OF OCTOBER MONORAIL
SERVICE WALKWAYS
ZONE (1008)
W124

REV	DATE	DSG.	CHK.	APP.	AMENDMENTS	STATUS
A	11/20/2022	M.KH	M.KH	DR.M.M	ISSUED FOR INFORMATION	IFI

Project Code	Rubric	Initiator	Lot	Ref	Number	Revision
93	M04	76	ACC60	DEP	DWG	08973	A

Tekla structures

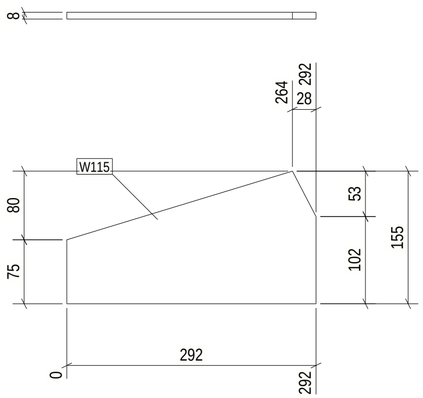

No. 31, Marked W115

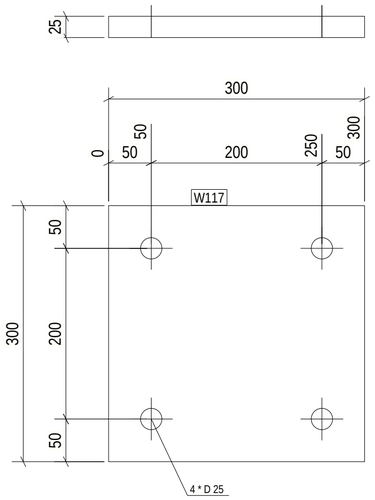

No. 6, Marked W117

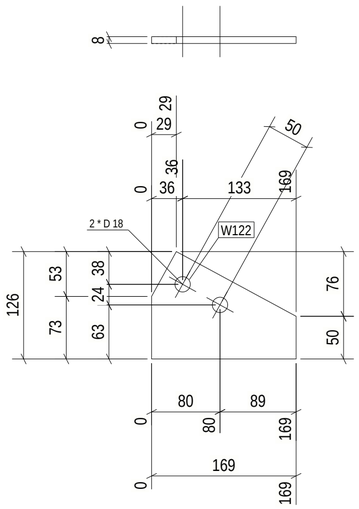

No. 1, Marked W122

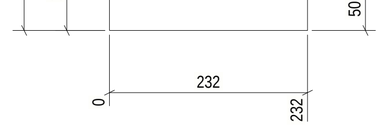

No. 17, Marked W116

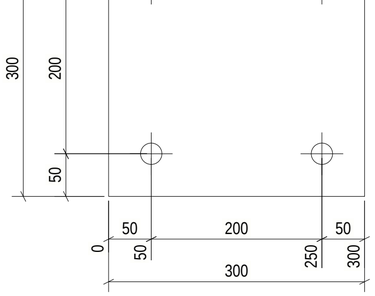

No. 121, Marked W118

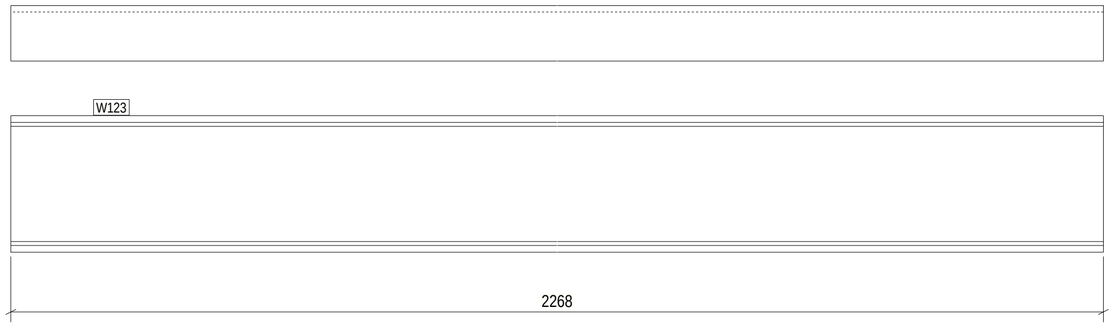

No. 28, Marked W123

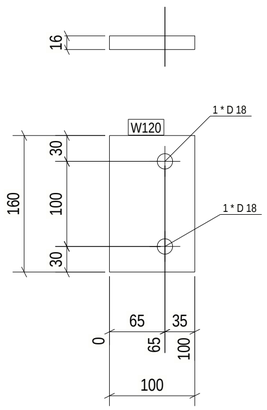

No. 1, Marked W120

Length & Area & Weight per piece						
W115	PL8*155.4	S355JR	31	292.1	0.07	2.1
Length & Area & Weight per piece						
W116	PL8*154.2	S355JR	17	232.1	0.05	1.5
Length & Area & Weight per piece						
W117	PL25*300	S355JR	6	300.0	0.21	17.7
Length & Area & Weight per piece						
W118	PL25*300	S355JR	121	300.0	0.21	17.7
Length & Area & Weight per piece						
W120	PL16*100	S355JR	1	160.0	0.04	2.0
Length & Area & Weight per piece						
W122	PL8*125.8	S355-JR	1	169.4	0.03	1.0
Length & Area & Weight per piece						
W123	UPN160	S235JR	28	2268.0	1.25	42.7
Mark	Profile	Grade	QTY	Length	Area	Weight

approval is subject to approval of coordination package between multi-discipline

REVIEWED WITH COMMENT MONORAILS PROJECT

28 REQ'D AS DRAWN MK'D W123
1 REQ'D AS DRAWN MK'D W122
1 REQ'D AS DRAWN MK'D W120
121 REQ'D AS DRAWN MK'D W118
6 REQ'D AS DRAWN MK'D W117
17 REQ'D AS DRAWN MK'D W116
31 REQ'D AS DRAWN MK'D W115

6 October Monorail
Engineering Unit
Valid For Construction

GENERAL NOTES:

1. THE DIMENSIONS SHOWN ARE NOMINAL (IN MILLIMETERS), U.N.O.
2. WELD SIZESHALL BE AISC MINIMUM OF 6 mm UNLESS NOTED OTHERWISE.
3. ALL FIELD WELDS SHALL BE INSPECTED PER QUALITY ASSURANCE AND SPECIAL INSPECTIONS.

REFERENCE DRAWINGS

1	93M-BOA-NAT-LOT-04833
2	93M-BOA-NAT-LOT-09170
3	93M-BOA-NAT-LOT-01976
4	
5	
6	
7	
8	
9	

6TH OF OCTOBER CITY RAIL TRANSIT MONORAIL

The Authority — Hill International (Consultant) — Main Contractor — Structural Designer

KEY PLAN:

SCALE	SHOPDRAWING	DATE
AS SHOWN		17/20/2022

REV	DATE	DSG.	CHK.	APP.	AMENDMENTS	STATUS
A	11/20/2022	M.KH	M.KH	DR.M.M	ISSUED FOR INFORMATION	IFI

DRAWING TITLE

6TH OF OCTOBER MONORAIL SERVICE WALKWAYS ZONE (1008) W115

Project Code	Rubric	Initiator	Lot	Ref	Number	Revision
9 3 M	0 4 7 6	A C C	6 0 D E P	D W G	0 8 9 7 4	A

Tekla structures

Length & Area & Weight per piece						
W109	PL10*25	S355JR	102	98.0	0.01	0.2
Length & Area & Weight per piece						
W110	PIPE2SCH40	S235JR	102	25.0	0.01	0.1
Length & Area & Weight per piece						
W111	L70*7	S235JR	95	825.0	0.23	6.0
Length & Area & Weight per piece						
W112	PL8*223.9	S355JR	68	625.0	0.25	7.4
Length & Area & Weight per piece						
W113	PL25*300	S355JR	7	300.0	0.21	17.7
Length & Area & Weight per piece						
W114	PL8*166.7	S355JR	98	232.9	0.05	1.5
Mark	Profile	Grade	QTY	Length	Area	Weight

approval is subject to approval of coordination package between multi-discipline

REVIEWED WITH COMMENT MONORAILS PROJECT

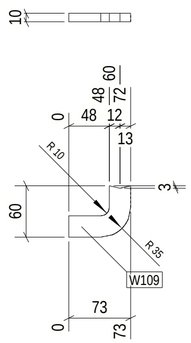

No. 102, Marked W109

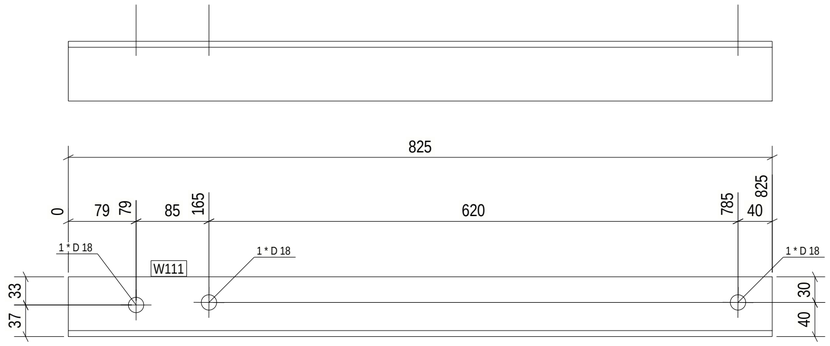

No. 95, Marked W111

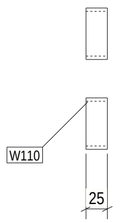

No. 102, Marked W110

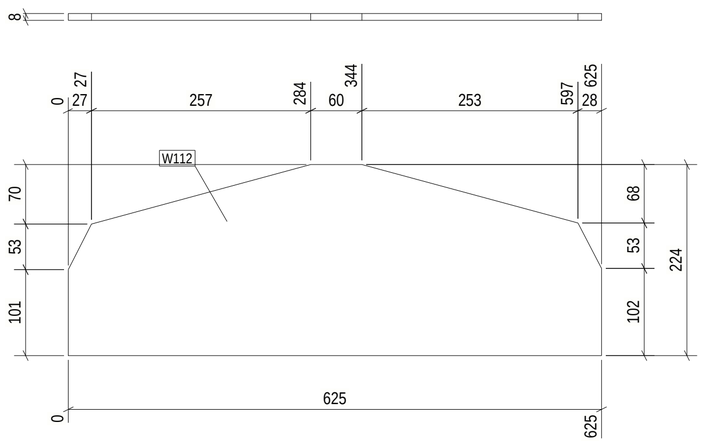

No. 68, Marked W112

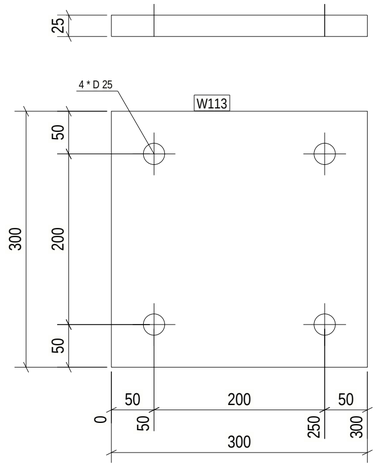

No. 7, Marked W113

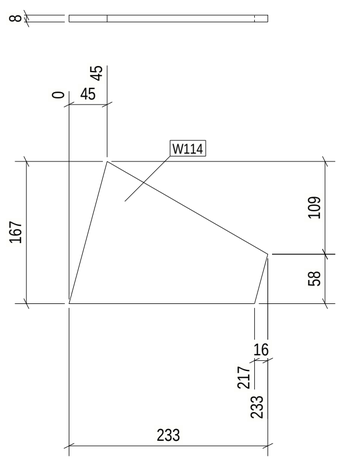

No. 98, Marked W114

98 REQ'D AS DRAWN MK'D W114
7 REQ'D AS DRAWN MK'D W113
68 REQ'D AS DRAWN MK'D W112
95 REQ'D AS DRAWN MK'D W111
102 REQ'D AS DRAWN MK'D W110
102 REQ'D AS DRAWN MK'D W109

6 October Monorail
Engineering Unit
Valid For Construction

GENERAL NOTES:

1. THE DIMENSIONS SHOWN ARE NOMINAL (IN MILLIMETERS), U.N.O.
2. WELD SIZESHALL BE AISC MINIMUM OF 6 mm UNLESS NOTED OTHERWISE.
3. ALL FIELD WELDS SHALL BE INSPECTED PER QUALITY ASSURANCE AND SPECIAL INSPECTIONS.

REFERENCE DRAWINGS

1	93M-BOA-NAT-LOT-04833
2	93M-BOA-NAT-LOT-09170
3	93M-BOA-NAT-LOT-01976
4	
5	
6	
7	
8	
9	

6TH OF OCTOBER CITY RAIL TRANSIT MONORAIL

The Authority — Hill International (Consultant) — Main Contractor — Structural Designer

KEY PLAN:

SCALE	SHOPDRAWING	DATE
AS SHOWN		11/20/2022

REV	DATE	DSG.	CHK.	APP.	AMENDMENTS	STATUS
A	11/20/2022	M.KH	M.KH	DR.M.M	ISSUED FOR INFORMATION	IFI

DRAWING TITLE

6TH OF OCTOBER MONORAIL
SERVICE WALKWAYS
ZONE (1008)
W109

Project Code	Rubric	Initiator	Lot	Ref	Number	Revision
93	M047	ACC60	DEP	DWG	08975	A

Tekla structures

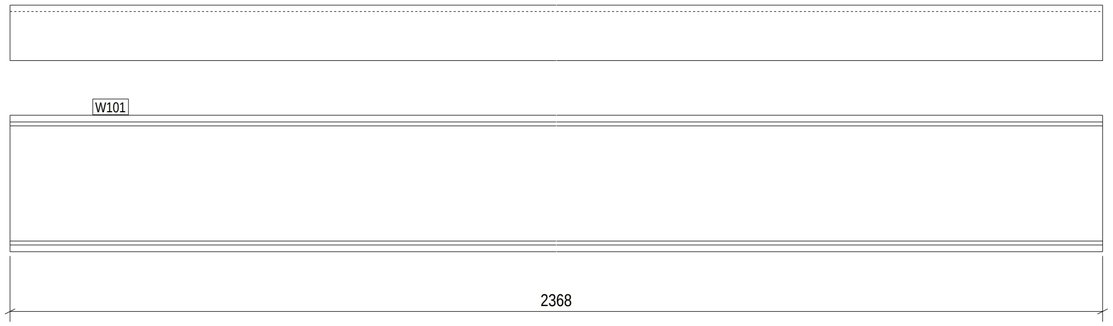

No. 68, Marked W101

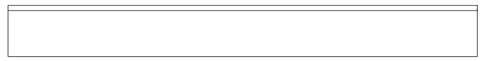

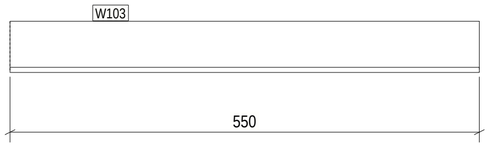

No. 96, Marked W103

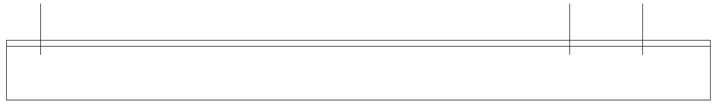

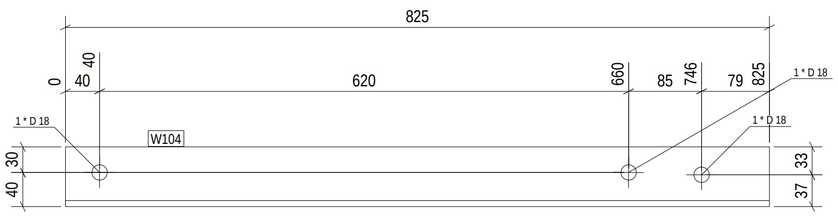

No. 95, Marked W104

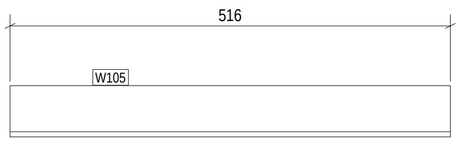

No. 68, Marked W105

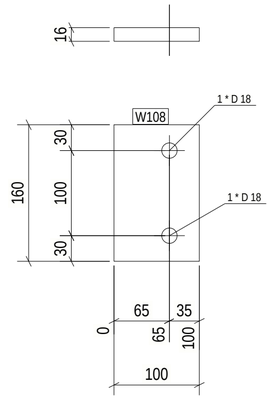

No. 46, Marked W108

Length & Area & Weight per piece						
W101	UPN160	S235JR	68	2368.0	1.30	44.6
Length & Area & Weight per piece						
W103	L60*6	S235JR	96	550.0	0.13	3.0
Length & Area & Weight per piece						
W104	L70*7	S235JR	95	825.0	0.23	6.0
Length & Area & Weight per piece						
W105	L60*6	S235JR	68	516.1	0.13	2.8
Length & Area & Weight per piece						
W106	L60*6	S235JR	96	1034.2	0.25	5.6
Length & Area & Weight per piece						
W107	L60*6	S235JR	68	1050.5	0.25	5.6
Length & Area & Weight per piece						
W108	PL16*100	S355JR	46	160.0	0.04	2.0
Mark	Profile	Grade	QTY	Length	Area	Weight

approval is subject to approval of coordination package between multi-discipline

REVIEWED WITH COMMENT MONORAILS PROJECT

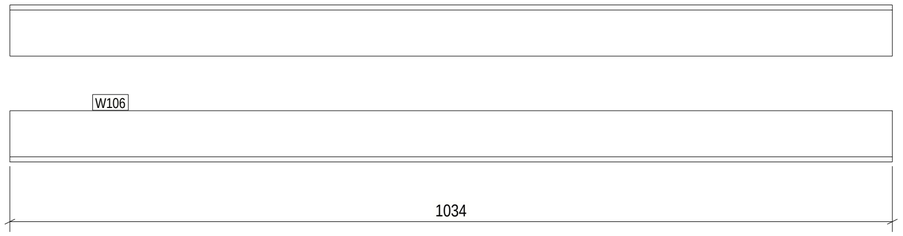

No. 96, Marked W106

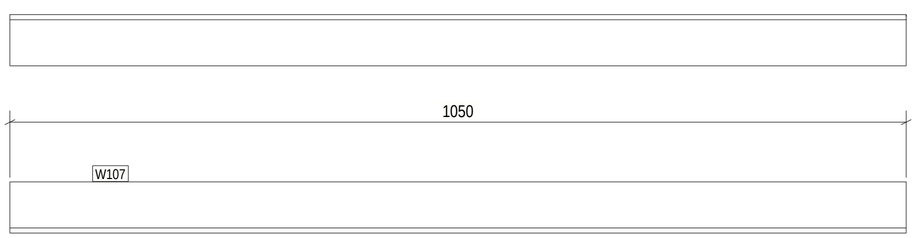

No. 68, Marked W107

46 REQ'D AS DRAWN MK'D W108
68 REQ'D AS DRAWN MK'D W107
96 REQ'D AS DRAWN MK'D W106
68 REQ'D AS DRAWN MK'D W105
95 REQ'D AS DRAWN MK'D W104
96 REQ'D AS DRAWN MK'D W103
68 REQ'D AS DRAWN MK'D W101

GENERAL NOTES:

1. THE DIMENSIONS SHOWN ARE NOMINAL (IN MILLIMETERS), U.N.O.
2. WELD SIZESHALL BE AISC MINIMUM OF 6 mm UNLESS NOTED OTHERWISE.
3. ALL FIELD WELDS SHALL BE INSPECTED PER QUALITY ASSURANCE AND SPECIAL INSPECTIONS.

REFERENCE DRAWINGS

1	93M-BOA-NAT-LOT-04833
2	93M-BOA-NAT-LOT-09170
3	93M-BOA-NAT-LOT-01976
4	
5	
6	
7	
8	
9	

6TH OF OCTOBER CITY RAIL TRANSIT MONORAIL

The Authority — Hill International Consultant — Main Contractor — Structural Designer

KEY PLAN:

SCALE	SHOPDRAWING	DATE
AS SHOWN		12/20/2022

REV	DATE	DSG.	CHK.	APP.	AMENDMENTS	STATUS
A	11/20/2022	M.KH	M.KH	DR.M.M	ISSUED FOR INFORMATION	IFI

6 October Monorail Engineering Unit
Valid For Construction

DRAWING TITLE

6TH OF OCTOBER MONORAIL
SERVICE WALKWAYS
ZONE (1008)
W103

Project Code	Rubric	Initiator	Lot	Ref	Number	Revision
93M	047	6ACC	60DE	PDWG	0897	6 A

Tekla structures

approval is subject to approval of coordination package between multi-discipline

REVIEWED WITH COMMENT
MONORAILS PROJECT

Length & Area & Weight per piece						
L103	PL3*80	S355JR	1	160.0	0.03	0.3
Mark	Profile	Grade	QTY	Length	Area	Weight

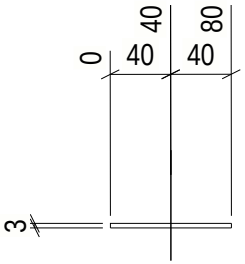

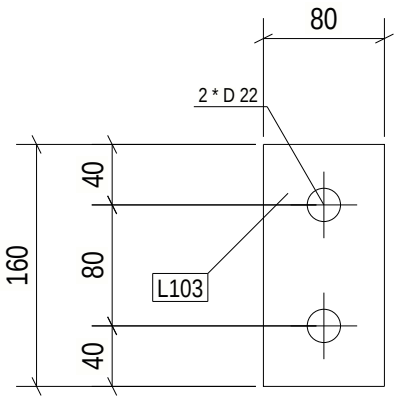

1 REQ'D AS DRAWN MK'D L103

GENERAL NOTES:

1. THE DIMENSIONS SHOWN ARE NOMINAL (IN MILLIMETERS), U.N.O.
2. WELD SIZESHALL BE AISC MINIMUM OF 6 mm UNLESS NOTED OTHERWISE.
3. ALL FIELD WELDS SHALL BE INSPECTED PER QUALITY ASSURANCE AND SPECIAL INSPECTIONS.

REFERENCE DRAWINGS

1	93M-BOA-NAT-LOT-04833
2	93M-BOA-NAT-LOT-09170
3	93M-BOA-NAT-LOT-01976
4	
5	
6	
7	
8	
9	

6TH OF OCTOBER CITY RAIL TRANSIT MONORAIL

The Authority | Hill International Consultant | Main Contractor | Structural Designer

KEY PLAN:

6 October Monorail Engineering Unit Valid For Construction

SCALE AS SHOWN | SHOPDRAWING | DATE 11/21/2022

DRAWING TITLE
6TH OF OCTOBER MONORAIL
SERVICE WALKWAYS
ZONE (1008)
L103

REV	DATE	DSG	CHK	APP	AMENDMENTS	STATUS
A	11/21/2022	MKH	MKH	DRMM	ISSUED FOR INFORMATION	IFI

Project Code	Rubric	Initiator	Lot	Ref	Number	Revision
9 3 M 0 4 7 6	A C C	6 0	D E P	D W G	0 8 9 7 7	A

Tekla structures